MIAMI-DADE COUNTY
BUILDING AND NEIGHBORHOOD COMPLIANCE DEPARTMENT (BNC)
BOARD AND CODE ADMINISTRATION DIVISION

MIAMI–DADE COUNTY, FLORIDA
PRODUCT CONTROL SECTION
11805 SW 26th Street, Room 208
Miami, Florida 33175–2474
T (786) 315–2590 F (786) 315–2599
www.miamidade.gov/building

NOTICE OF ACCEPTANCE (NOA)

Coral Industries, Inc.
3010 Rice Mine Road
P. O. Box 40228
Tuscaloosa, AL 35404–0228

SCOPE:

This NOA is being issued under the applicable rules and regulations governing the use of construction materials. The documentation submitted has been reviewed and accepted by Miami–Dade County BNC–Product Control Section to be used in Miami–Dade County and other areas where allowed by the Authority Having Jurisdiction (AHJ).

This NOA shall not be valid after the expiration date stated below. The Miami–Dade County Product Control Section (In Miami–Dade County) and/or the AHJ (in areas other than Miami–Dade County) reserve the right to have this product or material tested for quality assurance purposes. If this product or material fails to perform in the accepted manner, the manufacturer will incur the expense of such testing and the AHJ may immediately revoke, modify, or suspend the use of such product or material within their jurisdiction. BNC reserves the right to revoke this acceptance, if it is determined by Miami–Dade County Product Control Section that this product or material fails to meet the requirements of the applicable building code.

This product is approved as described herein, and has been designed to comply with the Florida Building Code, including the High Velocity Hurricane Zone.

DESCRIPTION: Series "PW 257" Curtain Wall System – L.M.I.

APPROVAL DOCUMENT: Drawing No. **PW257_03**, titled "PW257 Impact–Resistant Curtain Wall System", sheets 1 through 16 of 16, dated 05/10/2011 with revision "**2**" dated 08/30/2011, prepared by Broadway Engineering, P. A., signed, sealed and dated 10/06/2011 by Elizabeth A. Broadway, P. E., bearing the Miami–Dade County Product Control Approval stamp with the Notice of Acceptance number and Approval date by the Miami–Dade County Product Control Section.

MISSILE IMPACT RATING: Large Impact Resistant.

LABELING: Each unit shall bear a permanent label with the manufacturer's name or logo, city, state, model/ series and following statement: "Miami–Dade County Product Control Approved" unless otherwise noted herein.

RENEWAL of this NOA shall be considered after a renewal application has been filed and there has been no change in the applicable building code negatively affecting the performance of this product.

TERMINATION of this NOA will occur after the expiration date or if there has been a revision or change in the materials, use, and/or manufacture of the product or process. Misuse of this NOA as an endorsement of any product, for sales, advertising or any other purposes shall automatically terminate this NOA. Failure to comply with any section of this NOA shall be cause for termination and removal of NOA.

ADVERTISEMENT: The NOA number preceded by the words Miami–Dade County, Florida, and followed by the expiration date may be displayed in advertising literature. If any portion of the NOA is displayed, then it shall be done in its entirety.

INSPECTION: A copy of this entire NOA shall be provided to the user by the manufacturer or its distributors and shall be available for inspection at the job site at the request of the Building Official.

This NOA consists of this page 1, evidence pages E–1 and E–2, as well as approval document mentioned above.

The submitted documentation was reviewed by **Jaime D. Gascon, P. E.**

MIAMI-DADE COUNTY APPROVED

J Gascon 10/7/11

NOTICE OF ACCEPTANCE: EVIDENCE SUBMITTED

A. DRAWINGS

1. Manufacturer's die drawings and sections.
2. Drawing No. **PW257_03**, titled "PW257 Impact–Resistant Curtain Wall System", sheets 1 through 16 of 16, dated 05/10/2011 with revision "**2**" dated 08/30/2011, prepared by Broadway Engineering, P. A., signed, sealed and dated 10/06/2011 by Elizabeth A. Broadway, P. E.

B. TESTS

1. Test reports on: 1) Air Infiltration Test, per FBC, TAS 202–94
   2) Uniform Static Air Pressure Test, Loading per FBC TAS 202–94
   3) Water Resistance Test, per FBC, TAS 202–94
   4) Large Missile Impact Test per FBC, TAS 201–94
   5) Cyclic Wind Pressure Loading per FBC, TAS 203–94

   along with marked–up drawings and installation diagram of curtain wall system, prepared by Architectural Testing, Inc., Test Reports No.'s **ATI A2651.01–401–18, ATI A2653.01–401–18** and **ATI A2657.01–401–18**, dated 02/17 and 03/23/2011, signed and sealed by Shawn G. Collins, P. E.

C. CALCULATIONS

1. Anchor calculations and structural analysis, complying with FBC–2007, prepared by Broadway Engineering, P. A., dated 05/11/2011, signed, sealed and dated 10/03/2011 by Elizabeth A. Broadway, P. E.
2. **Glazing complies with ASTM E1300–04**

D. QUALITY ASSURANCE

1. Miami–Dade Building and Neighborhood Compliance Department (BNC).

E. MATERIAL CERTIFICATIONS

1. Notice of Acceptance No. **11–0624.02** issued to E. I. DuPont DeNemours & Co., Inc. for their "**DuPont Sentry Glass® Interlayer**" dated 05/26/2010, expiring on 01/14/2012.
2. Notice of Acceptance No. **11–0624.01** issued to E. I. DuPont DeNemours & Co., Inc. for their "**DuPont Butacite® PVB, Interlayer**" dated 09/08/11, expiring on 12/11/2016.

F. STATEMENTS

1. Statement letter of compliance with the FBC–2010, dated 05/10/2011, signed and sealed by Elizabeth A. Broadway, P. E.

Jaime D. Gascon, P. E.
Product Control Section Supervisor
NOA No. 11–0513.02
Expiration Date: October 13, 2016
Approval Date: October 13, 2011

F. STATEMENTS (CONTINUED)

2. Statement letter of no financial interest, conformance and compliance with the FBC–2007, dated 05/05/2011, signed and sealed by Elizabeth A. Broadway, P. E.

3. Laboratory compliance letter for Test Reports No.'s **ATI A2651.01–401–18, ATI A2653.01–401–18** and **ATI A2657.01–401–18**, issued by Architectural Testing, Inc., dated 02/17 and 03/23/2011, signed and sealed by Shawn G. Collins, P. E.

G. OTHERS

1. None.

Jaime D. Gascon, P. E.
Product Control Section Supervisor
NOA No. 11–0513.02
Expiration Date: October 13, 2016
Approval Date: October 13, 2011

PRODUCT APPROVAL DRAWINGS
PW257 IMPACT-RESISTANT CAPTURED AND BUTT GLAZED CURTAIN WALL SYSTEM WITH MULTIPLE GLAZING INFILLS FOR USE IN HURRICANE ZONES REQUIRING LARGE MISSILE IMPACT PROTECTION

ABBREVIATIONS:
D.L.O. = DAY LIGHT OPENING
D.O.H. = DOOR OPENING HEIGHT
D.O.W. = DOOR OPENING WIDTH
ELEVS = ELEVATIONS
EXT. = EXTERIOR
INT. = INTERIOR
MAX. = MAXIMUM
MIN. = MINIMUM
OPP. = OPPOSITE
TYP. = TYPICAL

GENERAL NOTES:

TEST STANDARDS & METHODS
TAS201-94, TAS202-94,
TAS203-94
ASTM E331-02, E330-02,
E283-04,
ASTM E1300-04

DESIGNED PRESSURE:
REF. SHEET 4 OF 16

WATER INFILTRATION: 16 PSF

AIR INFILTRATION: 6.24 PSF
ALL STRUCTURAL MEMBERS TO BE MADE FROM 6063-T6 ALUMINUM.
INTERIOR & EXTERIOR TRIM SHALL BE MADE FROM 6063-T5 ALUMINUM.
ALL VINYL COMPONENTS MEET ASTM C864.

MATERIALS, INCLUDING BUT NOT LIMITED TO STEEL SCREWS, THAT COME INTO CONTACT WITH OTHER DISSIMILAR MATERIALS SHALL MEET THE REQUIREMENTS OF 2007/2010 FLORIDA BUILDING CODE SECTION 2003.8.4

INDEX TO DRAWINGS	
1	INDEX TO DRAWINGS AND NOTES
2	FRAMING ELEVATION
2A	FRAMING ELEVATION
3	GLAZING SCHEDULE
4	MULLION CHART
5	FRAMING DETAILS - WET GLAZED
6	FRAMING DETAILS - DRY GLAZED
7	FRAMING DETAILS
8	FRAMING DETAILS
9	FRAMING DETAILS - BUTT GLAZED
10	DOOR AND FRAMING DETAILS
11	DOOR AND FRAMING DETAILS
12	ANCHOR CHART
13	BILL OF MATERIALS
14	BILL OF MATERIALS
15	DIE DRAWINGS

REV	BY	DATE	DESCRIPTION
1	BE	7/18/11	PER MDAHJ-DADE
2	BE	8/30/11	PER MDAHJ-DADE

Coral Architectural Products
3010 RICE MINE ROAD, TUSCALOOSA, AL 35406
PHONE 800-772-7737 FAX 800-255-7320

ELIZABETH A. BROADWAY LICENSE No. 38558 STATE OF FLORIDA

ELIZABETH A. BROADWAY
PROFESSIONAL ENGINEER
FLORIDA REGISTRATION NO. 38558
10/13/11

BROADWAY ENGINEERING, P.A.
CIVIL, MECHANICAL, STRUCTURAL AND BUILDING DESIGN
See Us At www.Broadway-Eng.Com
1335 W. Cass Street
Tampa, Florida 33606 813-251-9244
Fax 813-251-9330 Bus. Email: Info@Broadway-Eng.Com
Cadd. Email: DGorr@Broadway-Eng.Com
BE-3694 Certificate of Authorization No. 4599

NOTICE OF ACCEPTANCE

Approved as complying with the Florida Building Code
Date 10/13/2011
NOA# 11-0513.02
Miami Dade Product Control
By

PRODUCT APPROVAL DRAWINGS
PW257 IMPACT-RESISTANT CURTAIN WALL SYSTEM
PROTOCOLS: TAS 201-202-203
INDEX TO DRAWINGS AND NOTES

DATE		
5/10/2011		
DRAWN	CHECKED	APPROVED
DEG	WS	EAB

PROJECT NO.

DRAWING NO.
PW257_03

SHEET 1 OF 16

B.G. MULLIONS MAX. SPACING 48" ON CENTER

CAPTURED MULLIONS MAX. SPACING 60" ON CENTER

DOOR MAX. SPACING 74" ON CENTER

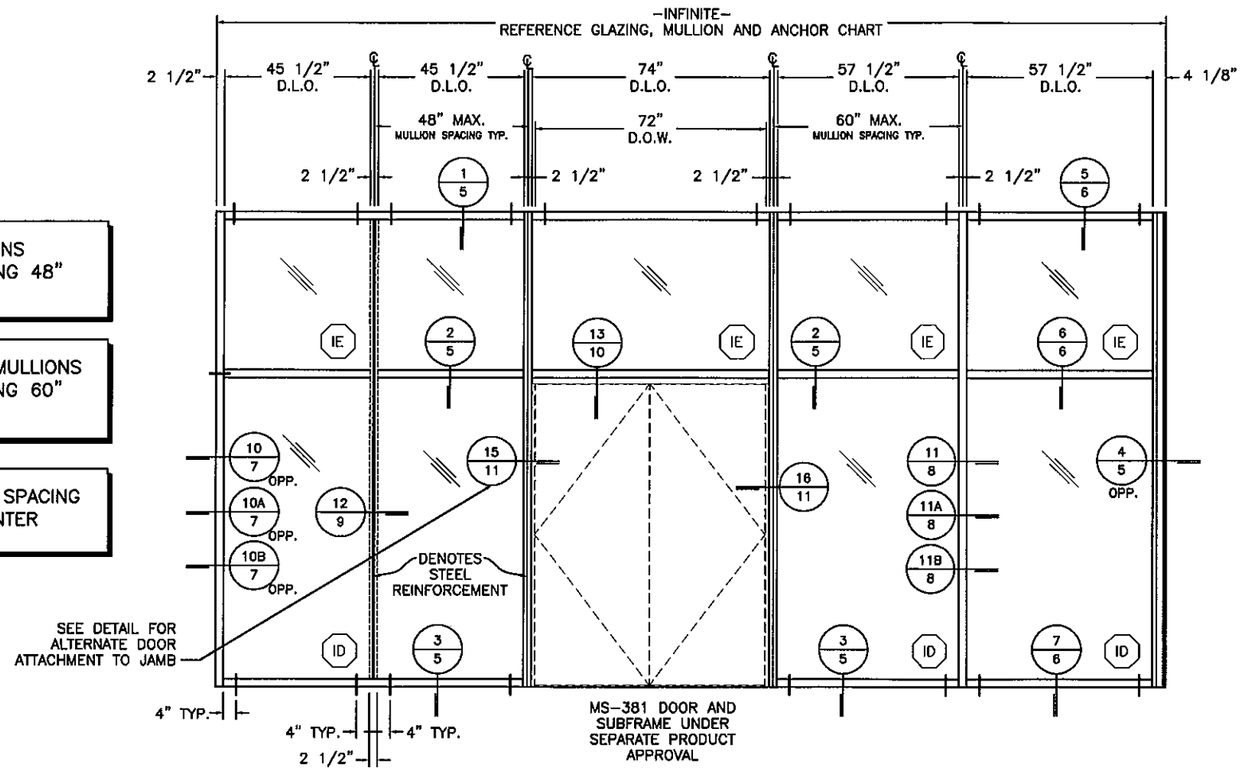

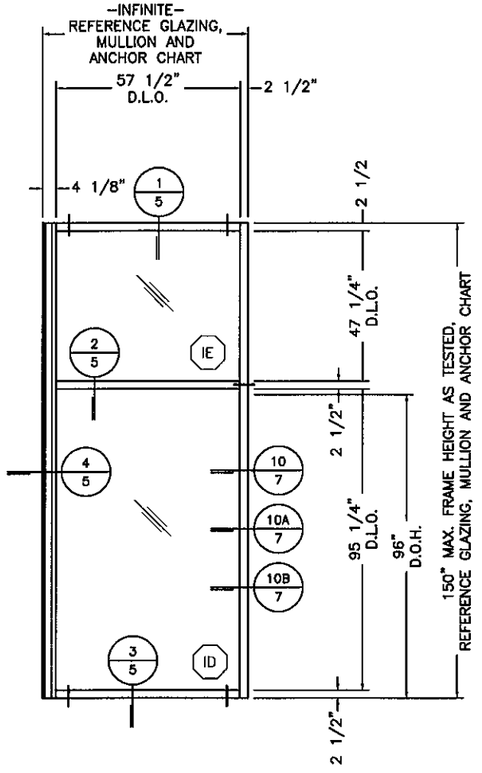

ELEVATION E-1
CAPTURED - SINGLE SPAN-
STEEL REINFORCEMENT - STEEL SUBSTRATE

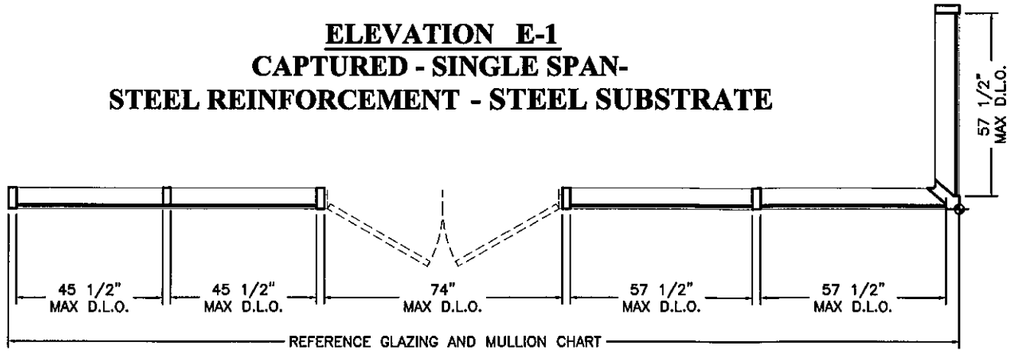

1. REFERENCE GLAZING CHART ON PAGE 3 OF 16
2. REFERENCE MULLION CHART ON PAGE 4 OF 16 FOR DESIGN PRESSURES
3. REFERENCE ANCHOR CHART ON PAGE 12 OF 16

SEE PAGES 3-4 AND 5 OF 16 FOR WET GLAZED DETAILS
SEE PAGES 3-4 AND 6 OF 16 FOR DRY GLAZED DETAILS

ELIZABETH A. BROADWAY PE LICENSE No.38558 STATE OF FLORIDA

ELIZABETH A. BROADWAY
PROFESSIONAL ENGINEER
FLORIDA REGISTRATION NO. 38558

BROADWAY ENGINEERING, P.A.
CIVIL, MECHANICAL, STRUCTURAL AND BUILDING DESIGN
See Us At www.Broadway-Eng.Com
1335 W. Cass Street
Tampa, Florida 33606 813-251-9244
Fax 813-251-9330 Bus. Email: Info@Broadway-Eng.Com
Cadd. Email: DGorr@Broadway-Eng.Com
BE-3894 Certificate of Authorization No. 4599

NOTICE OF ACCEPTANCE

Approved as complying with the Florida Building Code
Date 10/13/2011
NOA# 11-0513.02
Miami-Dade Product Control
By

REV	BY	DATE	DESCRIPTION
1	BE	7/18/11	PER MIAMI-DADE
2	BE	8/30/11	PER MIAMI-DADE

Coral
Architectural Products
3010 RICE MINE ROAD, TUSCALOOSA, AL 35406
PHONE: 800-772-7737 FAX: 800-255-7320

PRODUCT APPROVAL DRAWINGS
PW257 IMPACT-RESISTANT
CURTAIN WALL SYSTEM
PROTOCOLS: TAS 201-202-203

FRAMING ELEVATION

DATE	5/10/2011		
DRAWN	CHECKED	APPROVED	
DEG	WS	EAB	
PROJECT NO.			
DRAWING NO.	PW257_03		
SHEET	2 OF 16		

B.G. MULLIONS MAX. SPACING 48" ON CENTER

CAPTURED MULLIONS MAX. SPACING 60" ON CENTER

DOOR MAX. SPACING 74" ON CENTER

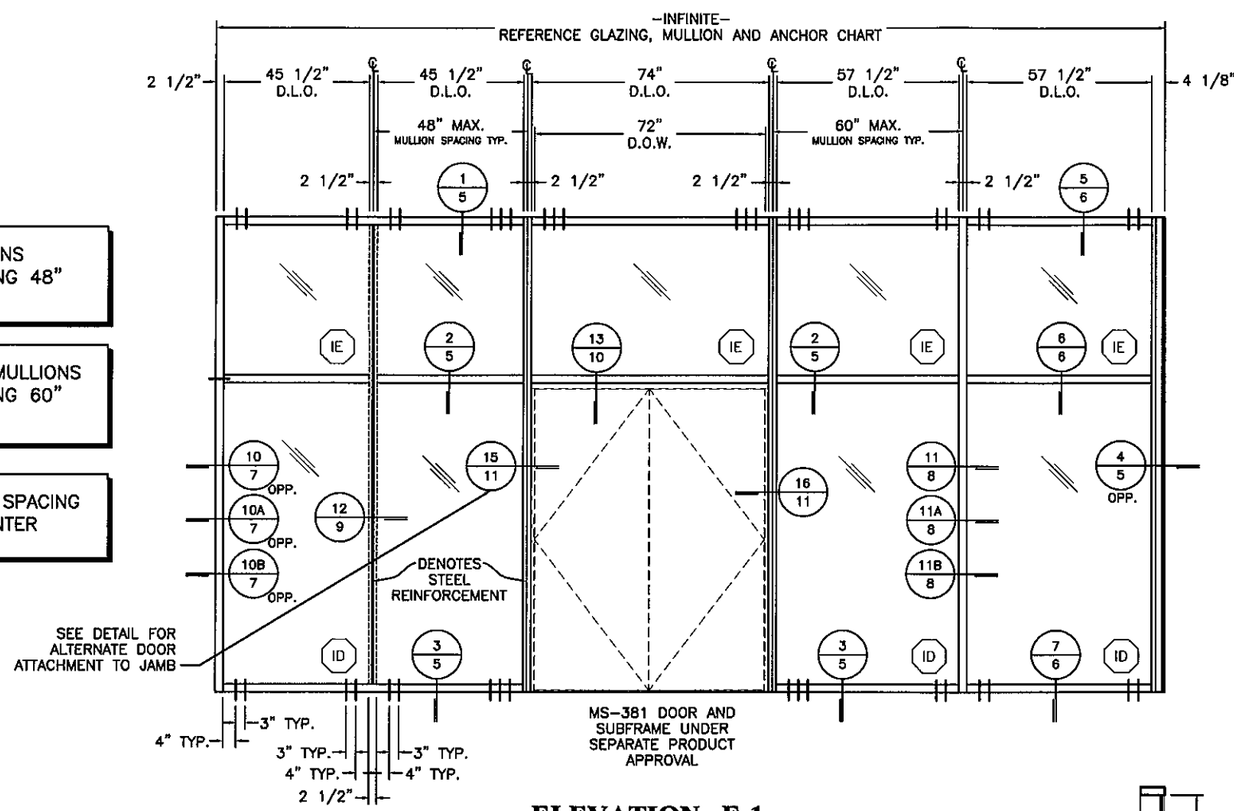

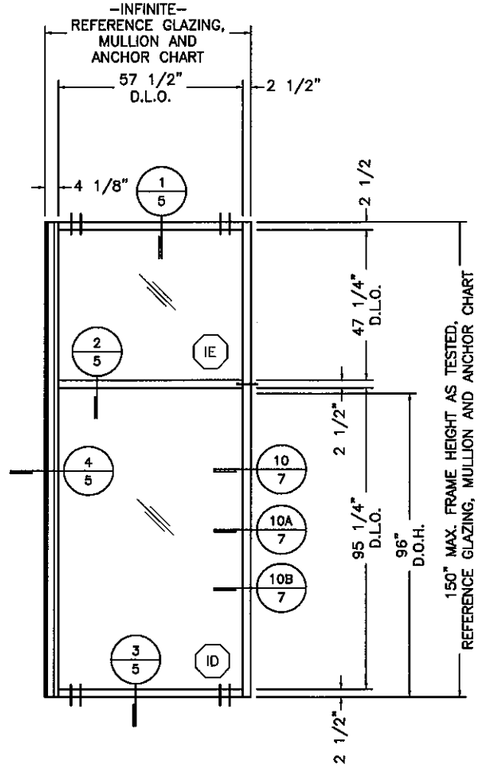

ELEVATION E-1
CAPTURED - SINGLE SPAN-
STEEL REINFORCEMENT - CONCRETE SUBSTRATE

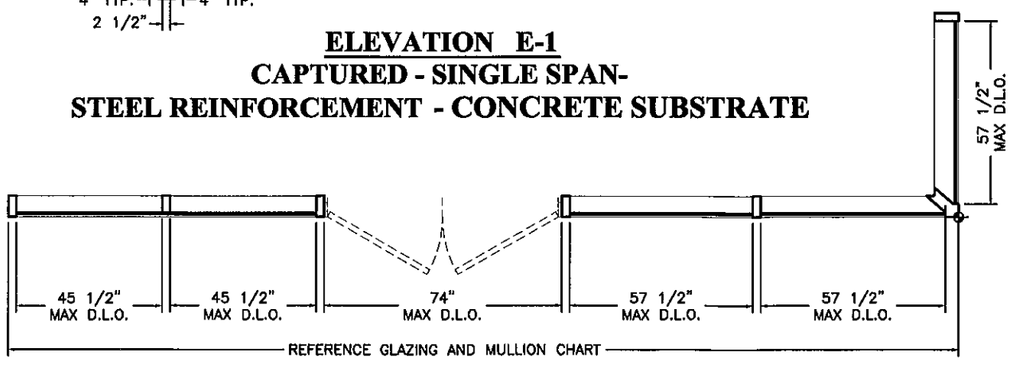

1. REFERENCE GLAZING CHART ON PAGE 3 OF 16
2. REFERENCE MULLION CHART ON PAGE 4 OF 16 FOR DESIGN PRESSURES
3. REFERENCE ANCHOR CHART ON PAGE 12 OF 16

SEE PAGES 3-4 AND 5 OF 16 FOR WET GLAZED DETAILS
SEE PAGES 3-4 AND 6 OF 16 FOR DRY GLAZED DETAILS

ELIZABETH A. BROADWAY P.E. LICENSE No. 38558 STATE OF FLORIDA PROFESSIONAL ENGINEER

ELIZABETH A. BROADWAY
PROFESSIONAL ENGINEER
FLORIDA REGISTRATION NO. 38558

BROADWAY ENGINEERING, P.A.
CIVIL, MECHANICAL, STRUCTURAL AND BUILDING DESIGN
See Us At www.Broadway-Eng.Com
1335 W. Cass Street
Tampa, Florida 33606 813-251-9244
Fax 813-251-9330 Bus. Email: Info@Broadway-Eng.Com
Cadd. Email: DGorr@Broadway-Eng.Com
BE-3894 Certificate of Authorization No. 4599

NOTICE OF ACCEPTANCE

Approved as complying with the Florida Building Code
Date 10/13/2011
NOA# 11-0513.02
Miami Dade Product Control
By

REV	BY	DATE	DESCRIPTION
1	BE	7/18/11	PER MDAHC-DADE
2	BE	8/30/11	PER MDAHC-DADE

Coral Architectural Products
3010 RICE MINE ROAD, TUSCALOOSA, AL 35406
PHONE: 800-772-7737 FAX: 800-255-7320

PRODUCT APPROVAL DRAWINGS
PW257 IMPACT-RESISTANT
CURTAIN WALL SYSTEM
PROTOCOLS: TAS 201-202-203

FRAMING ELEVATION

DATE	5/10/2011	
DRAWN DEG	CHECKED WS	APPROVED EAB
PROJECT NO.		
DRAWING NO.	PW257_03	
SHEET	2A OF 16	

GLAZING SCHEDULE

GLASS MARK	GLASS DESCRIPTION	MANUFACTURER	MAXIMUM D.L.O. SIZE (INCHES)	SQUARE FEET	MAXIMUM DESIGN PRESSURE
IE	1-5/16" INSULATED -1/4" H.S. -1/2" AIR SPACER -1/4" H.S. - DUPONT BUTACITE .090 PVB INTERLAYER	E.I. DUPONT DE NEMOURS & CO.	45-1/2" X 96"	30.3	SEE SHEET 4 OF 16
ID	1-5/16" INSULATED -1/4" H.S. -1/2" AIR SPACER -1/4" H.S. -SENTRY GLAS Ⓡ PWS .090 -1/4" H.S. *SEE NOTE BELOW	E.I. DUPONT DE NEMOURS & CO.	57-1/2" X 96"	38.3	SEE SHEET 4 OF 16

WET GLAZED

HEAD

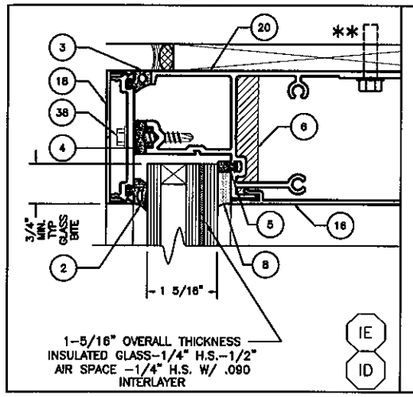

1-5/16" OVERALL THICKNESS INSULATED GLASS-1/4" H.S.-1/2" AIR SPACE -1/4" H.S. W/ .090 INTERLAYER — IE, ID

HORIZONTAL

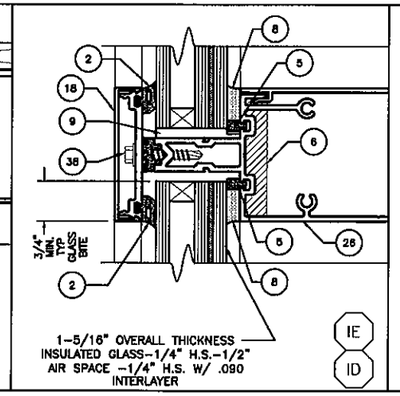

1-5/16" OVERALL THICKNESS INSULATED GLASS-1/4" H.S.-1/2" AIR SPACE -1/4" H.S. W/ .090 INTERLAYER — IE, ID

SILL

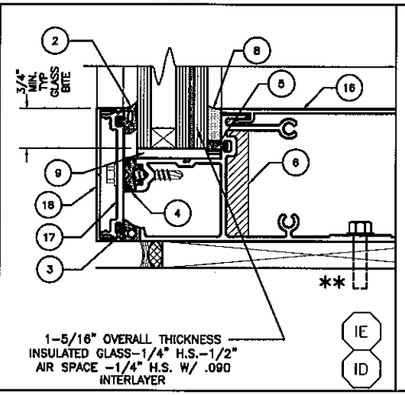

1-5/16" OVERALL THICKNESS INSULATED GLASS-1/4" H.S.-1/2" AIR SPACE -1/4" H.S. W/ .090 INTERLAYER — IE, ID

JAMB

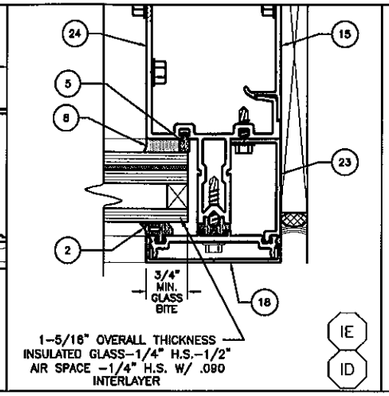

1-5/16" OVERALL THICKNESS INSULATED GLASS-1/4" H.S.-1/2" AIR SPACE -1/4" H.S. W/ .090 INTERLAYER — IE, ID

VERTICAL

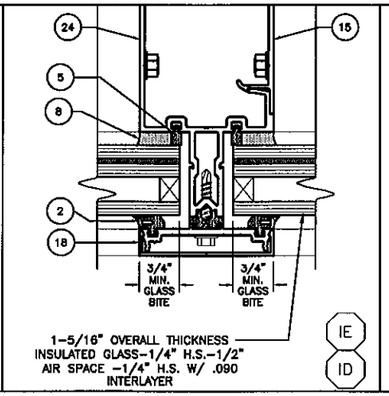

1-5/16" OVERALL THICKNESS INSULATED GLASS-1/4" H.S.-1/2" AIR SPACE -1/4" H.S. W/ .090 INTERLAYER — IE, ID

B.G. VERTICAL

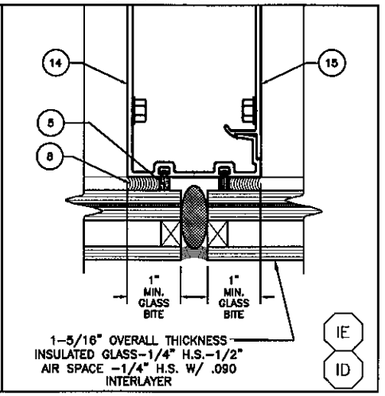

1-5/16" OVERALL THICKNESS INSULATED GLASS-1/4" H.S.-1/2" AIR SPACE -1/4" H.S. W/ .090 INTERLAYER — IE, ID

DRY GLAZED

HEAD

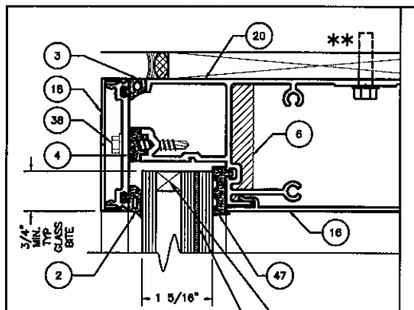

1-5/16" OVERALL THICKNESS INSULATED GLASS-1/4" H.S.-1/2" AIR SPACE -1/4" H.S. - SENTRY GLAS Ⓡ PWS .090 INTERLAYER — ID

HORIZONTAL

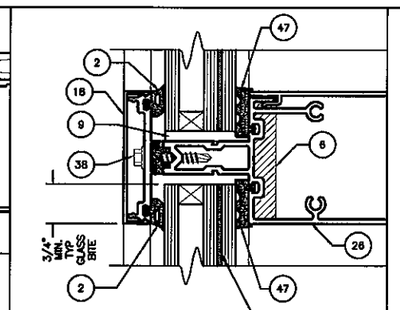

1-5/16" OVERALL THICKNESS INSULATED GLASS-1/4" H.S.-1/2" AIR SPACE -1/4" H.S. - SENTRY GLAS Ⓡ PWS .090 INTERLAYER — ID

SILL

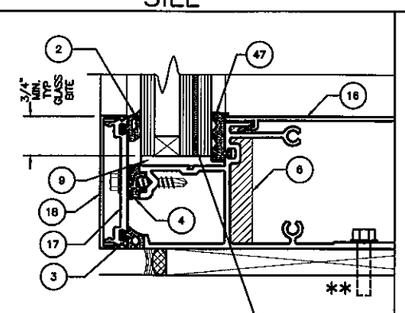

1-5/16" OVERALL THICKNESS INSULATED GLASS-1/4" H.S.-1/2" AIR SPACE -1/4" H.S. - SENTRY GLAS Ⓡ PWS .090 INTERLAYER — ID

JAMB

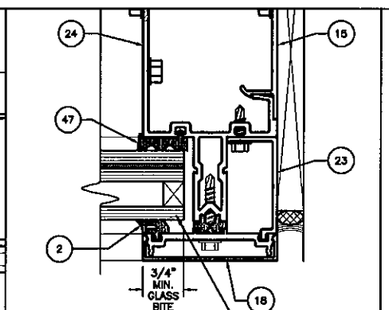

1-5/16" OVERALL THICKNESS INSULATED GLASS-1/4" H.S.-1/2" AIR SPACE -1/4" H.S. - SENTRY GLAS Ⓡ PWS .090 INTERLAYER — ID

VERTICAL

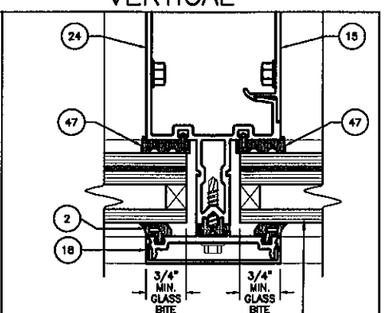

1-5/16" OVERALL THICKNESS INSULATED GLASS-1/4" H.S.-1/2" AIR SPACE -1/4" H.S. - SENTRY GLAS Ⓡ PWS .090 INTERLAYER — ID

SPACER:
1/2" AIR SPACE WITH AN ALUMINUM BOX SPACER AROUND THE PERIMETER OF GLASS

* PRIMARY SEALANT:
TYPE PIB-29 MANUFACTURED BY ADCO

⚠1 SECONDARY SEALANT:
TYPE GE-3723 A&B (TWO PART) SILICONE MANUFACTURED BY GE

** SEE PAGE 12 OF 16 FOR ANCHOR CHART

ELIZABETH A. BROADWAY
PROFESSIONAL ENGINEER
FLORIDA REGISTRATION NO. 38558

BROADWAY ENGINEERING, P.A.
CIVIL, MECHANICAL, STRUCTURAL AND BUILDING DESIGN
See Us At www.Broadway-Eng.Com
1335 W. Cass Street
Tampa, Florida 33606 813-251-9244
Fax 813-251-9330 Bus. Email: Info@Broadway-Eng.Com
Cadd. Email: DGorr@Broadway-Eng.Com
BE-3894 Certificate of Authorization No. 4599

NOTICE OF ACCEPTANCE

Approved as complying with the Florida Building Code
Date 10/13/2011
NOA# 11-0513.02
Miami Dade Product Control
By

REV	BY	DATE	DESCRIPTION
1	BE	7/18/11	PER MDAMI-DADE
2	BE	8/30/11	PER MDAMI-DADE

Coral Architectural Products
3010 RICE MINE ROAD, TUSCALOOSA, AL 35406
PHONE: 800-772-7737 FAX: 800-255-7320

PRODUCT APPROVAL DRAWINGS
PW257 IMPACT-RESISTANT
CURTAIN WALL SYSTEM
PROTOCOLS: TAS 201-202-203

GLAZING SCHEDULE

DATE 5/10/2011

DRAWN	CHECKED	APPROVED
DEG	WS	EAB

PROJECT NO.

DRAWING NO. PW257_03

SHEET 3 OF 16

PW257 INSULATED IMPACT RESISTANT CURTAIN WALL – CAPTURED

DESIGN PRESSURE P.S.F.	INTERMEDIATE VERTICAL MULLION WITHOUT STEEL	INTERMEDIATE VERTICAL MULLION WITH STEEL SR150 WITH 3.75" X 1/2" BAR WELDED	INTERMEDIATE VERTICAL MULLION WITH STEEL SR150 WITH 3.75" X 3/4" BAR WELDED	WALL JAMB MULLION MUST BE ANCHORED AT HORIZONTALS	MAXIMUM MULLION	MAXIMUM MULLION SPACING CENTER TO CENTER ()–SEE NOTES BELOW	MAXIMUM GLASS SIZE DAYLITE OPENING	SQUARE FEET	QUALIFIED GLASS TYPES
+65/–65	PW650/202			PW650/202	108"	48"	45–1/2 X 84"	26.5	IE–ID
+80/–80		PW650/202		PW650/202	150"	60"	57–1/2" X 96"	38.3	ID
+80/–80			PW650/202	PW650/202	150"	76 1/2" (1)	72" X 47–1/4"	23.6	IE–ID
+80/–80	(3)	CORNER PW208/209/656 AND SR504			150"	60"	57–1/2" X 96"	38.3	ID

PW257 INSULATED IMPACT RESISTANT CURTAIN WALL – BUTT GLAZED

+80/–80		PW151/202		PW650/202		48"	45–1/2" X 96"	30.5	ID
+80/–80	(2)	CORNER PW208/209/656 AND SR504			150"	48"	45–1/2" X 96"	30.5	ID

PW257 INSULATED IMPACT RESISTANT CURTAIN WALL – DRY GLAZED

+70/–80		PW650/202		PW650/202	150"	60"	57–1/2" X 96"	38.3	ID

MNOTES

(1)	BASED ON OPENING FOR DOOR AND FRAME. HORIZONTALS MUST BE USED AT 48" INTERVALS
(2)	CAPTURED CORNER CAN BE USED WITH BUTT GLAZED SYSTEM, MULLION SPACING CANNOT EXCEEED 48" ON CENTER
(3)	CORNER ASSEMBLY CONSISTS OF PW208/209/654/658/210 AND SR504

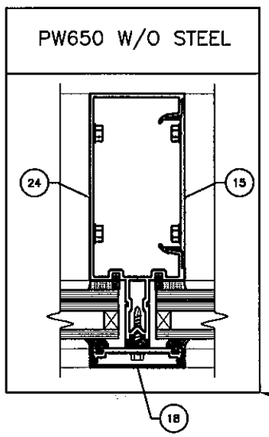

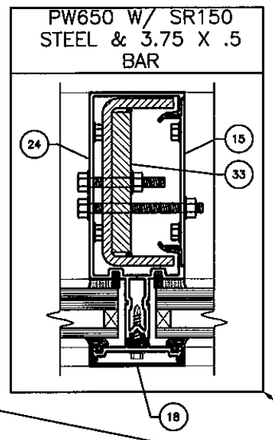

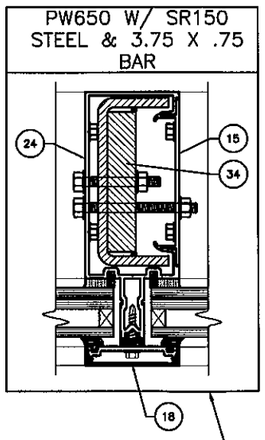

3/4" MIN. GLASS BITE

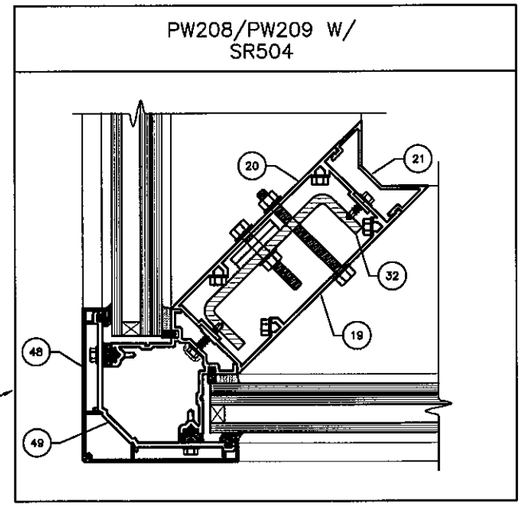

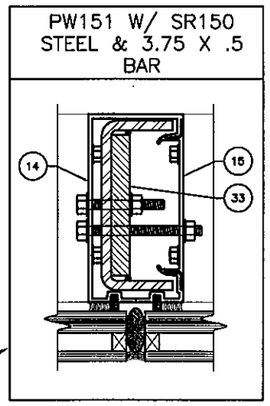

1" MIN. GLASS BITE

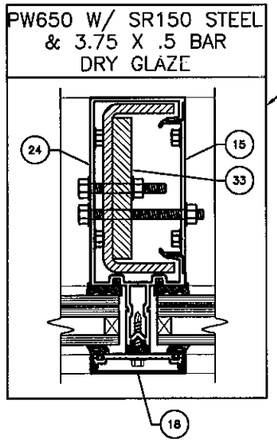

ELIZABETH A. BROADWAY
PROFESSIONAL ENGINEER
FLORIDA REGISTRATION NO. 38558

BROADWAY ENGINEERING, P.A.
CIVIL, MECHANICAL, STRUCTURAL AND BUILDING DESIGN
See Us At www.Broadway-Eng.Com
1335 W. Cass Street
Tampa, Florida 33606 813-251-9244
Fax 813-251-9330 Bus. Email: Info@Broadway-Eng.Com
Cadd. Email: DGorr@Broadway-Eng.Com
BE–3894 Certificate of Authorization No. 4599

NOTICE OF ACCEPTANCE

Approved as complying with the Florida Building Code
Date 10/13/2011
NOA# 11-0513.02
Miami-Dade Product Control
By

REV	BY	DATE	DESCRIPTION
1	BE	7/18/11	PER MIAMI-DADE
2	BE	8/30/11	PER MIAMI-DADE

Coral Architectural Products
3010 RICE MINE ROAD, TUSCALOOSA, AL 35406
PHONE: 800-772-7737 FAX: 800-255-7320

PRODUCT APPROVAL DRAWINGS
PW257 IMPACT-RESISTANT
CURTAIN WALL SYSTEM
PROTOCOLS: TAS 201-202-203
MULLION CHART

DATE	5/10/2011		
DRAWN DEG	CHECKED WS	APPROVED EAB	
PROJECT NO.			
DRAWING NO.	PW257_03		
SHEET	4 OF 16		

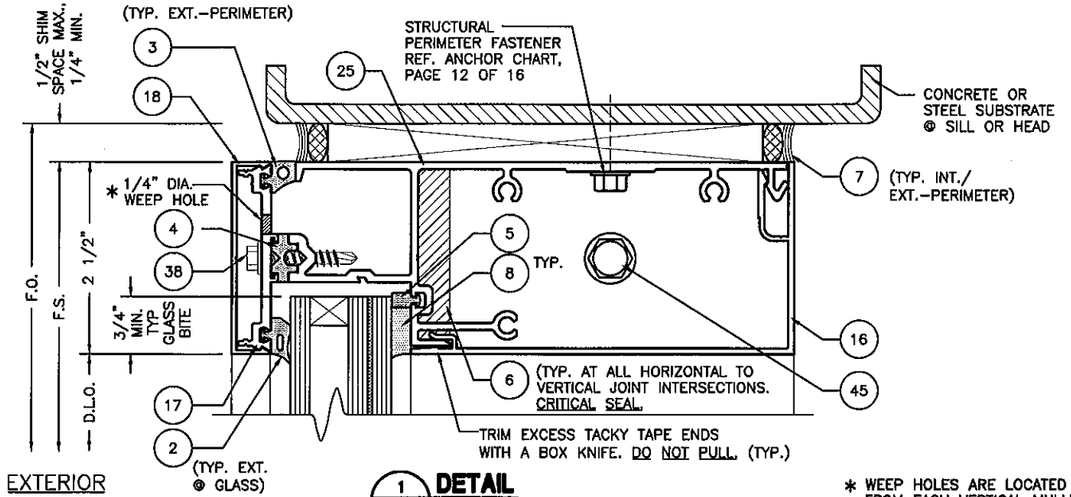

1/5 DETAIL
SCALE: 1:2

* WEEP HOLES ARE LOCATED 8" IN FROM EACH VERTICAL MULLION ON THE UNDERSIDE OF THE HORIZONTAL MULLION TRIM CAPS AND 6" IN FROM EACH VERTICAL MULLION ON THE CENTER OF THE PRESSURE PLATES.

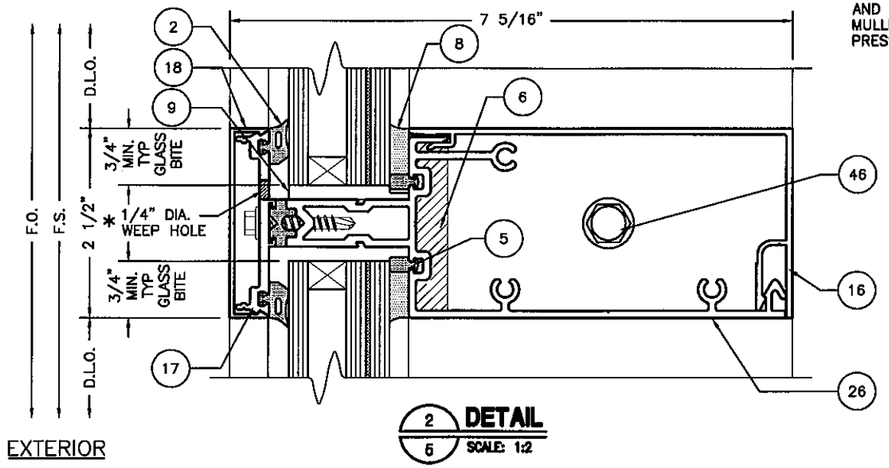

2/5 DETAIL
SCALE: 1:2

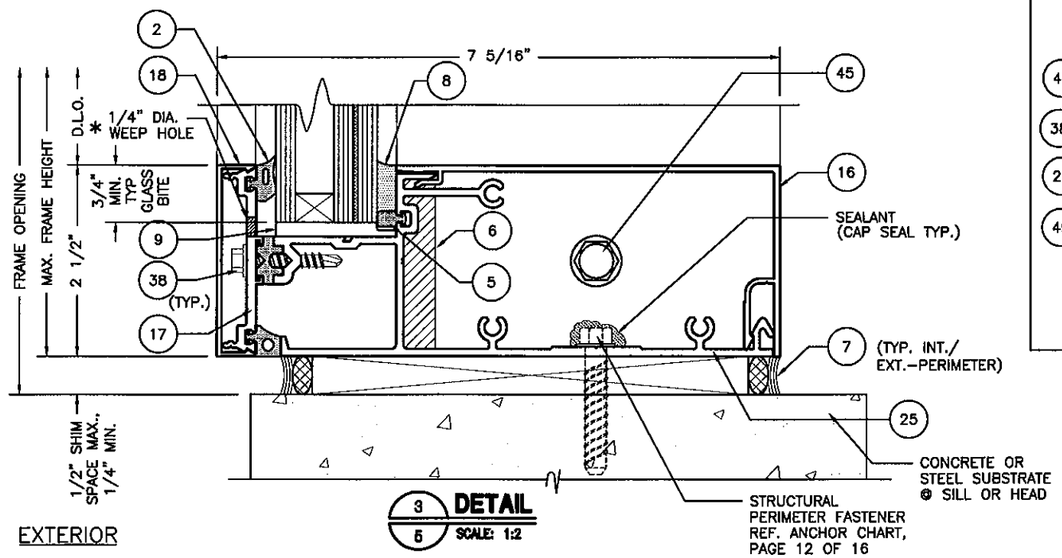

3/5 DETAIL
SCALE: 1:2

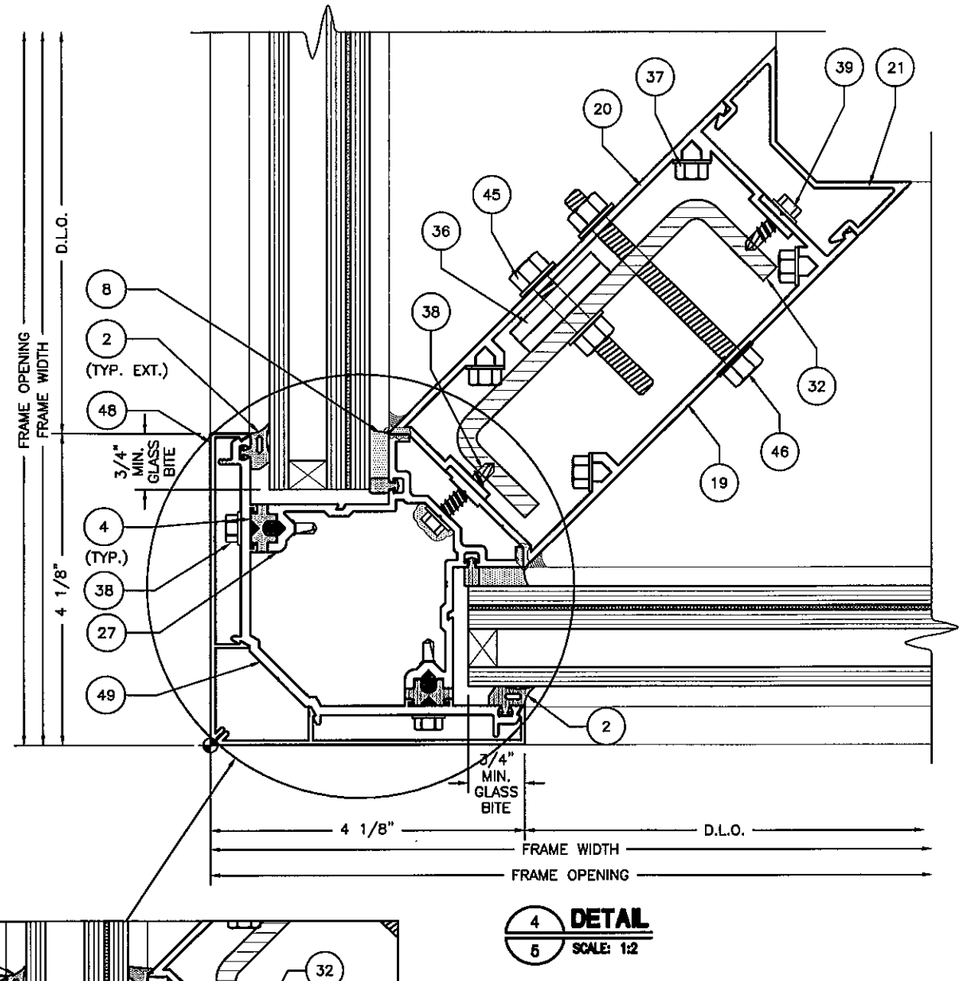

4/5 DETAIL
SCALE: 1:2

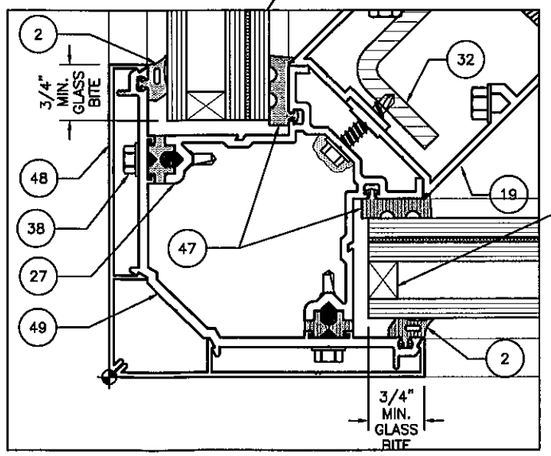

DRY GLAZE GASKET
(0.90 SENTRY GLAS ® ONLY TYPE ID)

SPACER:
1/2" AIR SPACE WITH AN ALUMINUM BOX SPACER AROUND THE PERIMETER OF GLASS

* PRIMARY SEALANT:
TYPE PIB–29 MANUFACTURED BY ADCO

⚠1 SECONDARY SEALANT:
TYPE GE–3723 A&B (TWO PART) SILICONE MANUFACTURED BY GE

ELIZABETH A. BROADWAY
PROFESSIONAL ENGINEER
FLORIDA REGISTRATION NO. 38558

BROADWAY ENGINEERING, P.A.
CIVIL, MECHANICAL, STRUCTURAL AND BUILDING DESIGN
See Us At "www.Broadway-Eng.Com"
1335 W. Cass Street
Tampa, Florida 33606 813-251-9244
Fax 813-251-9330 Bus. Email: Info@Broadway-Eng.Com
Cadd. Email: DCorr@Broadway-Eng.Com
BE–3894 Certificate of Authorization No. 4599

NOTICE OF ACCEPTANCE

Approved as complying with the Florida Building Code
Date 10/13/2011
NOA# 11-0513.02
Miami-Dade Product Control
By

REV	BY	DATE	DESCRIPTION
1	BE	7/18/11	PER MDAHC-DADE
2	BE	8/30/11	PER MDAHC-DADE

Coral Architectural Products
3010 RICE MINE ROAD, TUSCALOOSA, AL 35406
PHONE: 800-772-7737 FAX: 800-255-7320

PRODUCT APPROVAL DRAWINGS
PW257 IMPACT-RESISTANT
CURTAIN WALL SYSTEM
PROTOCOLS: TAS 201-202-203

FRAMING DETAILS - WET GLAZED

DATE		
5/10/2011		
DRAWN DEG	CHECKED WS	APPROVED EAB
PROJECT NO.		
DRAWING NO. PW257_03		
SHEET 5 OF 16		

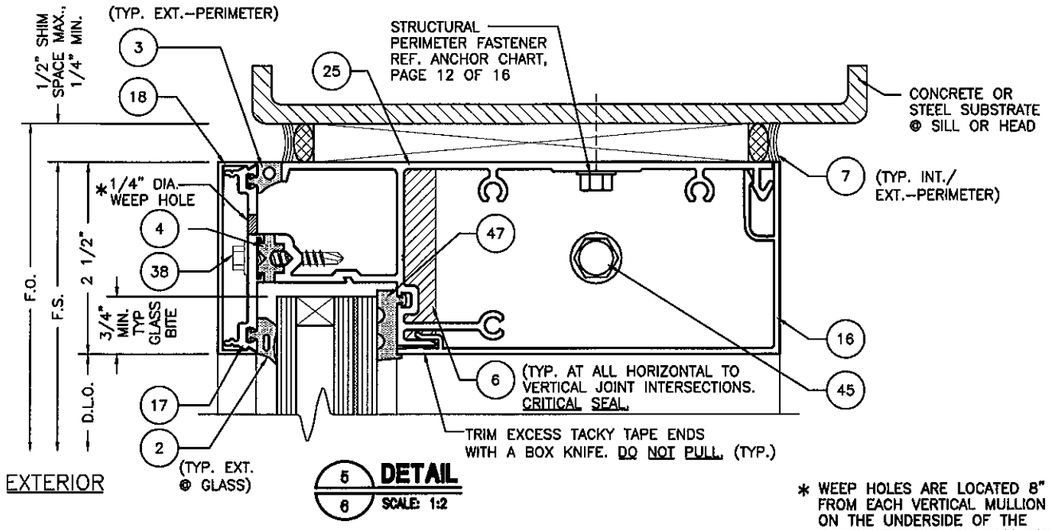

* WEEP HOLES ARE LOCATED 8" IN FROM EACH VERTICAL MULLION ON THE UNDERSIDE OF THE HORIZONTAL MULLION TRIM CAPS AND 6" IN FROM EACH VERTICAL MULLION ON THE CENTER OF THE PRESSURE PLATES.

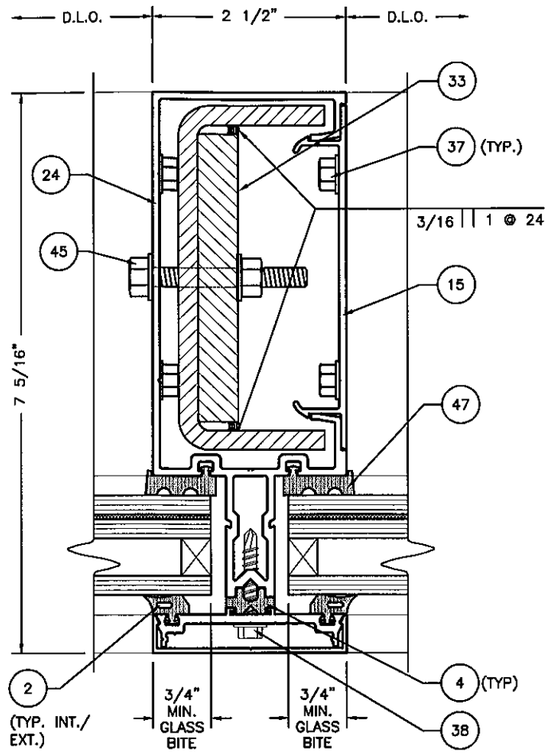

8/6 DETAIL
SCALE: 1:2

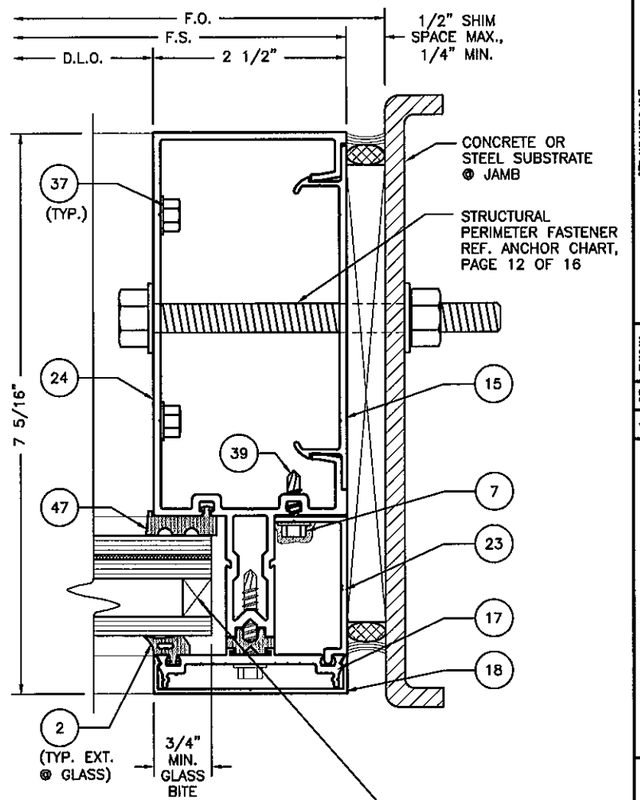

9/6 DETAIL
SCALE: 1:2

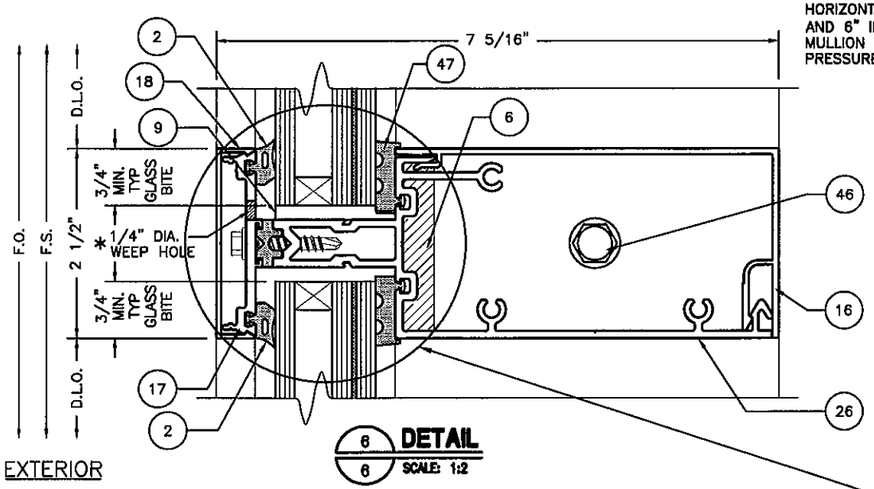

6/6 DETAIL
SCALE: 1:2

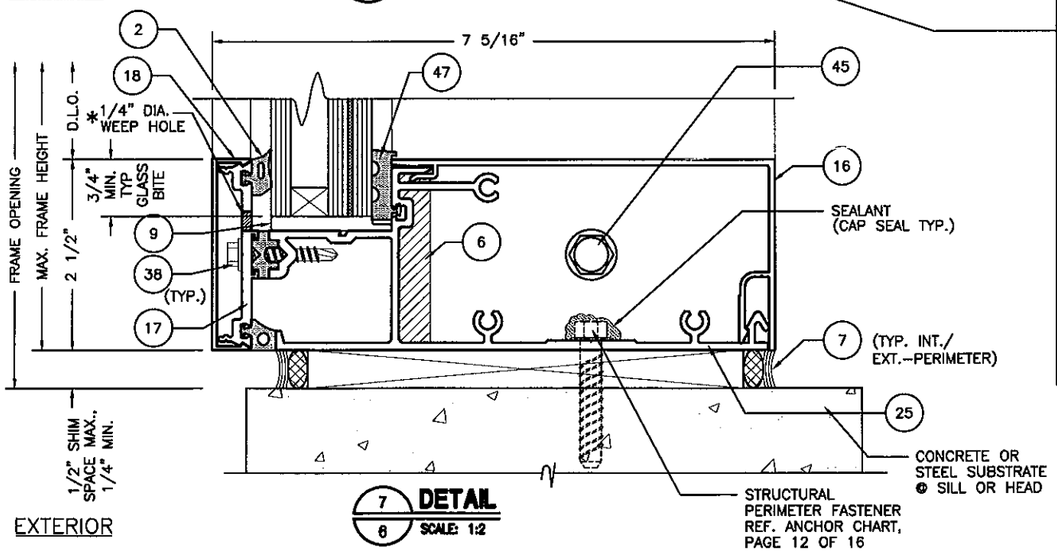

7/6 DETAIL
SCALE: 1:2

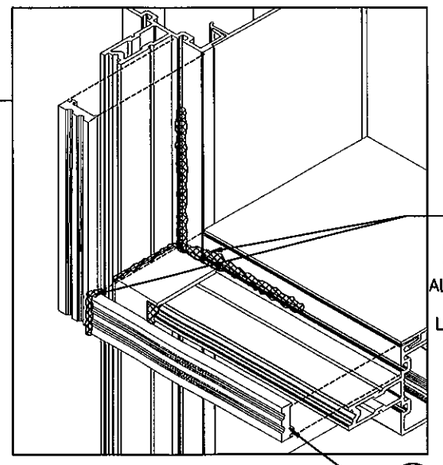

DRY GLAZE GASKET
(0.90 SENTRY GLAS ® ONLY TYPE ID)

SPACER:
1/2" AIR SPACE WITH AN ALUMINUM BOX SPACER AROUND THE PERIMETER OF GLASS

* PRIMARY SEALANT:
TYPE PIB–29 MANUFACTURED BY ADCO

⚠ SECONDARY SEALANT:
TYPE GE–3723 A&B (TWO PART) SILICONE MANUFACTURED BY GE

ELIZABETH A. BROADWAY
LICENSE NO. 38558
STATE OF FLORIDA
PROFESSIONAL ENGINEER

ELIZABETH A. BROADWAY
PROFESSIONAL ENGINEER
FLORIDA REGISTRATION NO. 38558
10/6/11

BROADWAY ENGINEERING, P.A.
CIVIL, MECHANICAL, STRUCTURAL AND BUILDING DESIGN
See Us At www.Broadway-Eng.Com
1335 W. Cass Street
Tampa, Florida 33606 813-251-9244
Fax 813-251-9330 Bus. Email: Info@Broadway-Eng.Com
Cadd. Email: DGorr@Broadway-Eng.Com
BE-3894 Certificate of Authorization No. 4599

NOTICE OF ACCEPTANCE

Approved as complying with the Florida Building Code
Date 10/13/2011
NOA# 11-0513.02
Miami-Dade Product Control
By

REV	BY	DATE	DESCRIPTION
1	BE	7/18/11	PER MIAMI-DADE
2	BE	8/30/11	PER MIAMI-DADE

Coral
Architectural Products
3010 RICE MINE ROAD, TUSCALOOSA, AL 35406
PHONE: 800-772-7737 FAX: 800-255-7320

PRODUCT APPROVAL DRAWINGS
PW257 IMPACT-RESISTANT
CURTAIN WALL SYSTEM
PROTOCOLS: TAS 201-202-203
FRAMING DETAILS - DRY GLAZED

DATE	5/10/2011	
DRAWN DEG	CHECKED WS	APPROVED EAB
PROJECT NO.		
DRAWING NO.	PW257_03	
SHEET	6 OF 16	

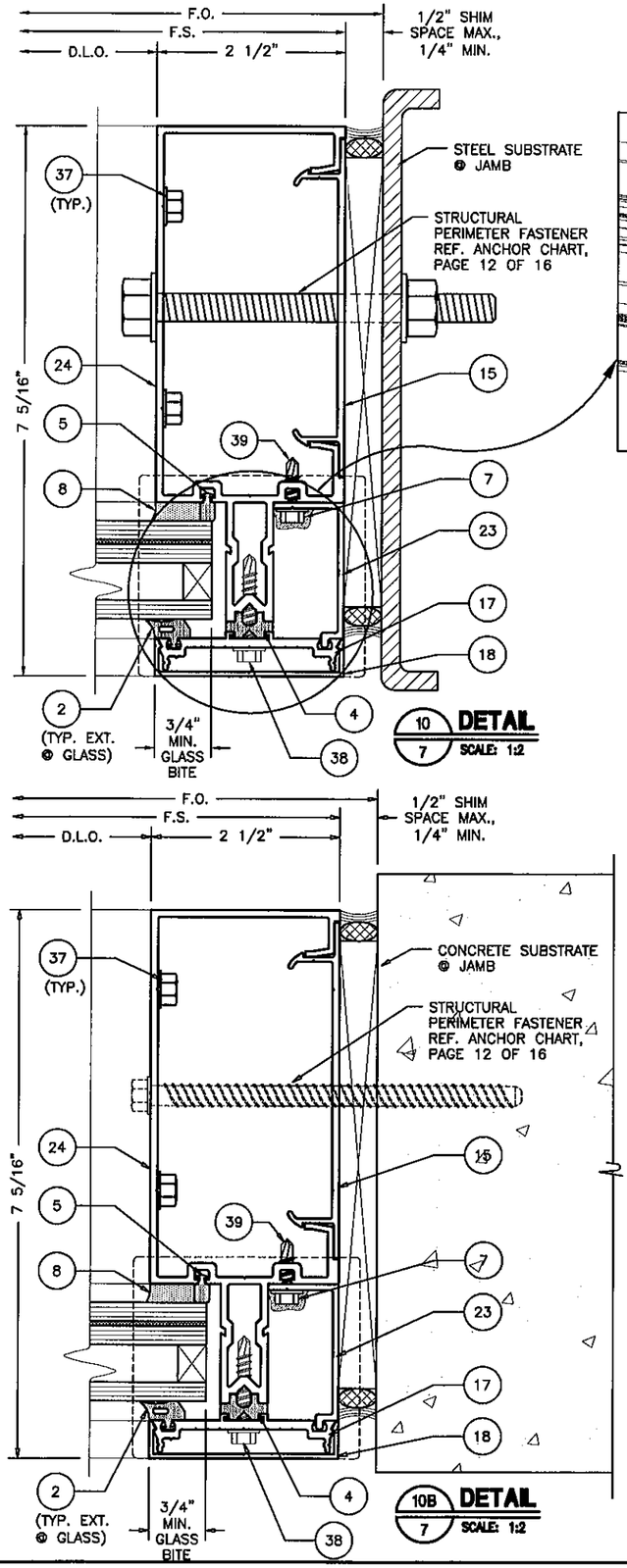

10 DETAIL 7 SCALE: 1:2

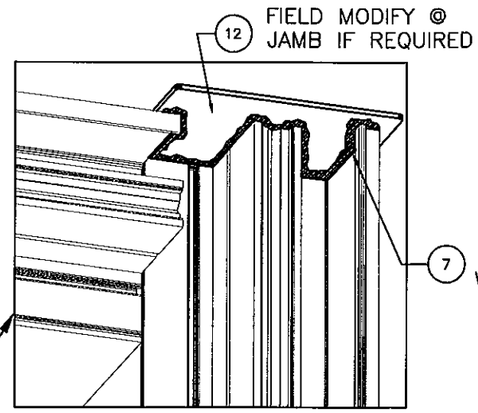

TOP SHOWN
CLOSURE CAP
(BOTTOM SIMILAR)

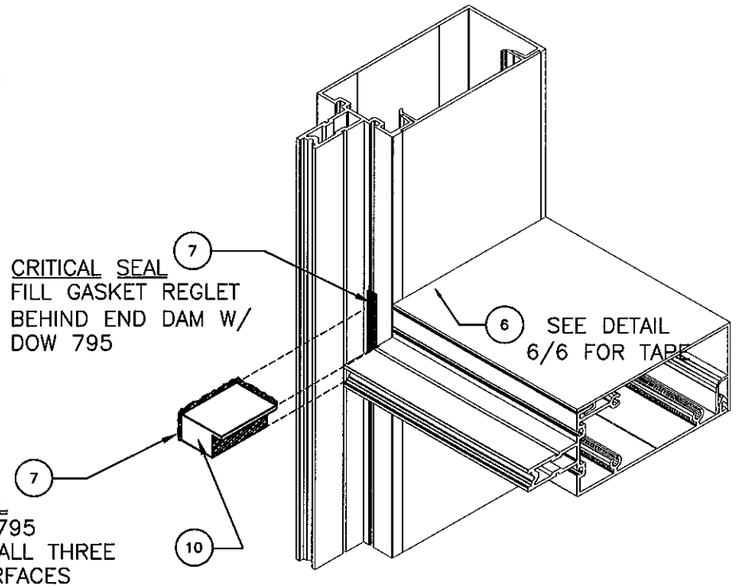

CRITICAL SEAL
APPLY DOW 795 SEALANT TO ALL THREE CONTACT SURFACES PRIOR TO INSTALLATION AT HORIZONTALS AND SILL.

10B DETAIL 7 SCALE: 1:2

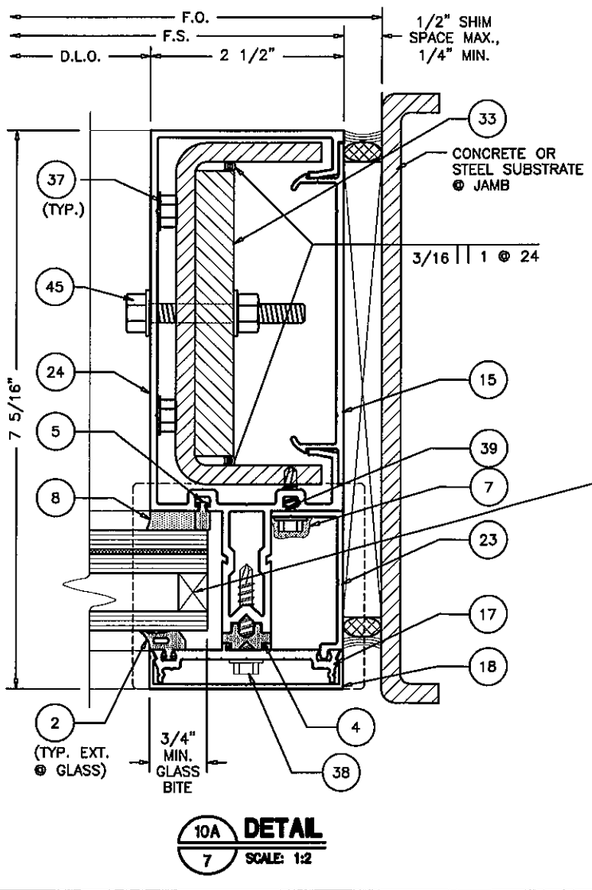

10A DETAIL 7 SCALE: 1:2

* SPACER:
1/2" AIR SPACE WITH AN ALUMINUM BOX SPACER AROUND THE PERIMETER OF GLASS

PRIMARY SEALANT:
TYPE PIB-29 MANUFACTURED BY ADCO

SECONDARY SEALANT:
TYPE GE-3723 A&B (TWO PART) SILICONE MANUFACTURED BY GE

ELIZABETH A. BROADWAY
PROFESSIONAL ENGINEER 38558
FLORIDA REGISTRATION NO. 38558
10/13/11

STATE OF FLORIDA
ELIZABETH A. BROADWAY
LICENSE
PROFESSIONAL ENGINEER

BROADWAY ENGINEERING, P.A.
CIVIL, MECHANICAL, STRUCTURAL AND BUILDING DESIGN
See Us At www.Broadway-Eng.Com
1335 W. Cass Street
Tampa, Florida 33606 813-251-9244
Fax 813-251-9330 Bus. Email: Info@Broadway-Eng.Com
Cadd. Email: DGorr@Broadway-Eng.Com
BE-3894 Certificate of Authorization No. 4599

NOTICE OF ACCEPTANCE
Approved as complying with the Florida Building Code
Date 10/13/2011
NOA# 11-0513.02
Miami Dade Product Control
By

REV	BY	DATE	DESCRIPTION
1	BE	7/15/11	PER MDAHC-DADE
2	BE	8/30/11	PER MDAHC-DADE

Coral Architectural Products
3010 RICE MINE ROAD, TUSCALOOSA, AL 35406
PHONE: 800-772-7737 FAX: 800-255-7320

PRODUCT APPROVAL DRAWINGS
PW257 IMPACT-RESISTANT
CURTAIN WALL SYSTEM
PROTOCOLS: TAS 201-202-203
FRAMING DETAILS

DATE	5/10/2011	
DRAWN DEG	CHECKED WS	APPROVED EAB
PROJECT NO.		
DRAWING NO.	PW257_03	
SHEET	7 OF 16	

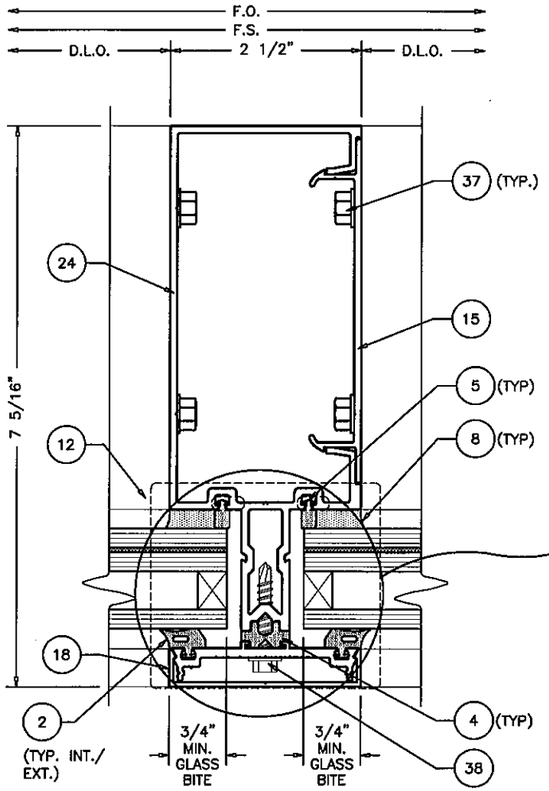

11 **DETAIL**
8 SCALE: 1:2

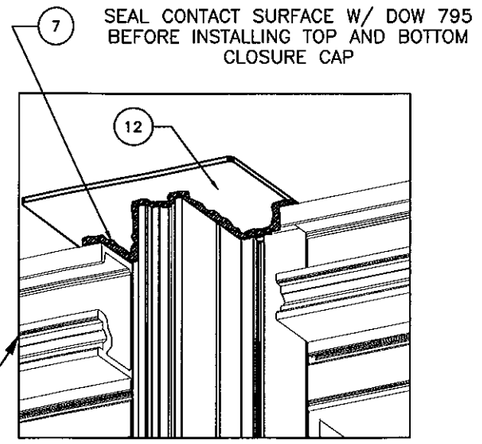

TOP SHOWN
CLOSURE CAP
(BOTTOM SIMILAR)

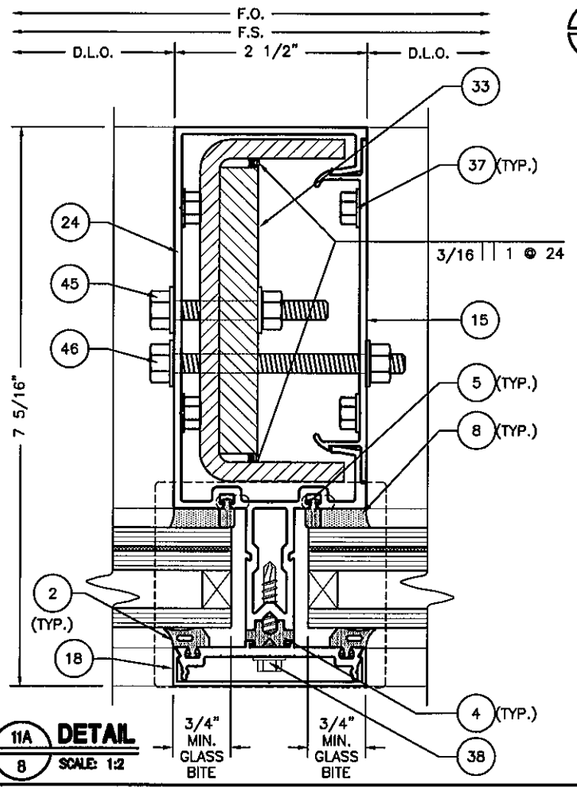

11A **DETAIL**
8 SCALE: 1:2

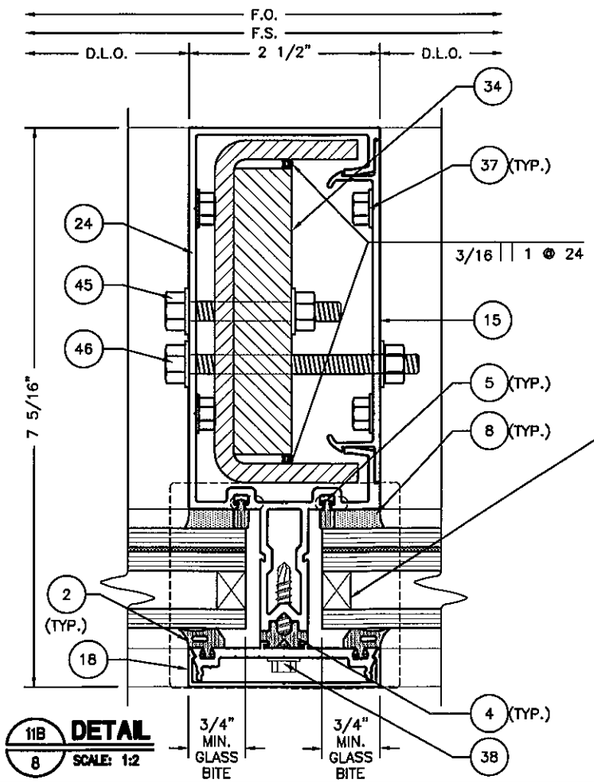

11B **DETAIL**
8 SCALE: 1:2

SPACER:
1/2" AIR SPACE WITH AN ALUMINUM BOX SPACER AROUND THE PERIMETER OF GLASS

PRIMARY SEALANT:
TYPE PIB-29 MANUFACTURED BY ADCO

SECONDARY SEALANT:
TYPE GE-3723 A&B (TWO PART) SILICONE MANUFACTURED BY GE.

* 1

ELIZABETH A. BROADWAY, P.E. LICENSE No. 38558 STATE OF FLORIDA

ELIZABETH A. BROADWAY
PROFESSIONAL ENGINEER
FLORIDA REGISTRATION NO. 38558

BROADWAY ENGINEERING, P.A.
CIVIL, MECHANICAL, STRUCTURAL AND BUILDING DESIGN
See Us At www.Broadway-Eng.Com
1335 W. Cass Street
Tampa, Florida 33606 813-251-9244
Fax 813-251-9330 *Bus. Email: Info@Broadway-Eng.Com*
Cadd. Email: DGorr@Broadway-Eng.Com
BE-3894 *Certificate of Authorization No. 4599*

NOTICE OF ACCEPTANCE

Approved as complying with the Florida Building Code
Date 10/13/2011
NOA# 11-0513.02
Miami-Dade Product Control
By

REV	BY	DATE	DESCRIPTION
1	BE	7/18/11	PER MIAMI-DADE
2	BE	8/30/11	PER MIAMI-DADE

Coral Architectural Products
3010 RICE MINE ROAD, TUSCALOOSA, AL 35406
PHONE: 800-772-7737 FAX: 800-255-7320

PRODUCT APPROVAL DRAWINGS
PW257 IMPACT-RESISTANT
CURTAIN WALL SYSTEM
PROTOCOLS: TAS 201-202-203
FRAMING DETAILS

DATE	5/10/2011
DRAWN DEG	CHECKED WS / APPROVED EAB
PROJECT NO.	
DRAWING NO.	PW257_03
SHEET	8 OF 16

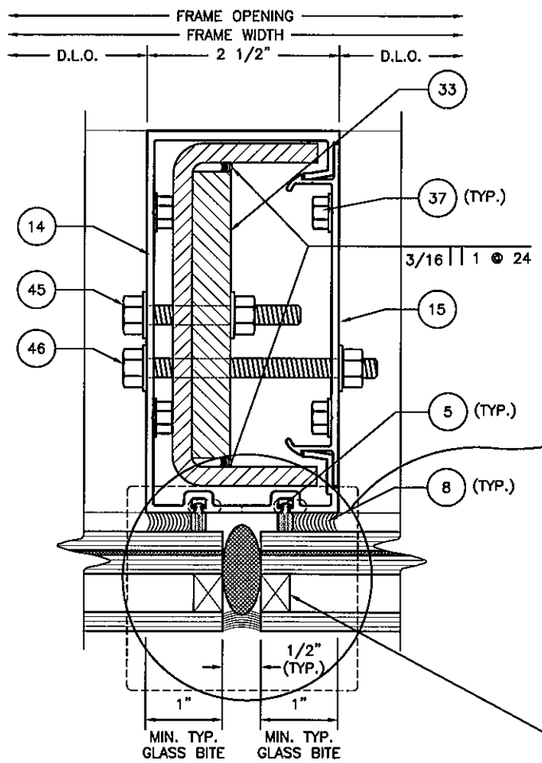

12 / 9 **DETAIL**
SCALE: 1:2

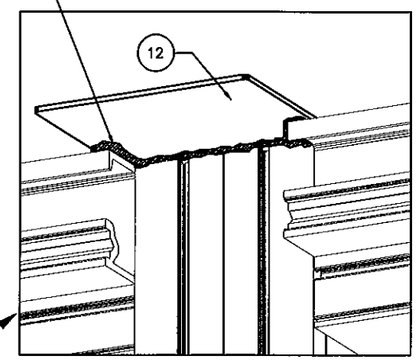

TOP SHOWN
CLOSURE CAP
(BOTTOM SIMILAR)

SPACER:
1/2" AIR SPACE WITH AN ALUMINUM BOX SPACER AROUND THE PERIMETER OF GLASS

* PRIMARY SEALANT:
TYPE PIB-29 MANUFACTURED BY ADCO

△1 SECONDARY SEALANT:
TYPE GE-3723 A&B (TWO PART) SILICONE MANUFACTURED BY GE

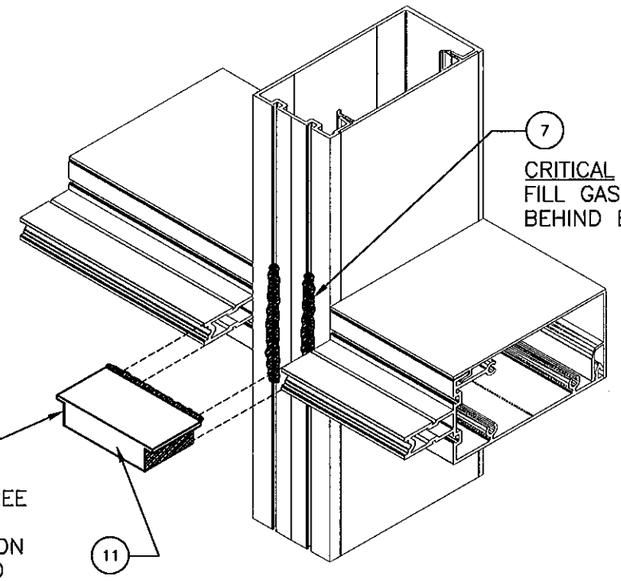

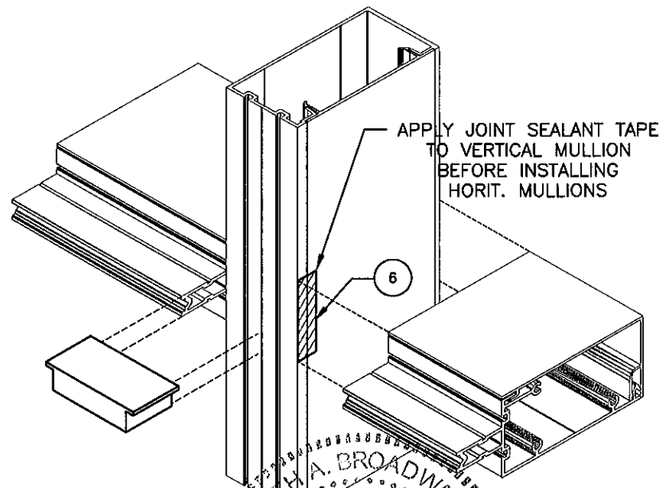

ELIZABETH A. BROADWAY
PROFESSIONAL ENGINEER
FLORIDA REGISTRATION NO. 38558

BROADWAY ENGINEERING, P.A.
CIVIL, MECHANICAL, STRUCTURAL AND BUILDING DESIGN
See Us At www.Broadway-Eng.Com
1335 W. Cass Street
Tampa, Florida 33606 813-251-9244
Fax 813-251-9330 Bus. Email: Info@Broadway-Eng.Com
Cadd. Email: DGorr@Broadway-Eng.Com
BE-3894 Certificate of Authorization No. 4599

NOTICE OF ACCEPTANCE

Approved as complying with the Florida Building Code
Date 10/13/2011
NOA# 11-0513.02
Miami Dade Product Control
By

REV	BY	DATE	DESCRIPTION
1	BE	7/18/11	PER MIAMI-DADE
2	BE	8/30/11	PER MIAMI-DADE

Coral
Architectural Products
3010 RICE MINE ROAD, TUSCALOOSA, AL 35406
PHONE: 800-772-7737 FAX: 800-255-7320

PRODUCT APPROVAL DRAWINGS
PW257 IMPACT-RESISTANT
CURTAIN WALL SYSTEM
PROTOCOLS: TAS 201-202-203
FRAMING DETAILS - BUTT GLAZED

DATE		
5/10/2011		
DRAWN DEG	CHECKED WS	APPROVED EAB
PROJECT NO.		
DRAWING NO. PW257_03		
SHEET 9 OF 16		

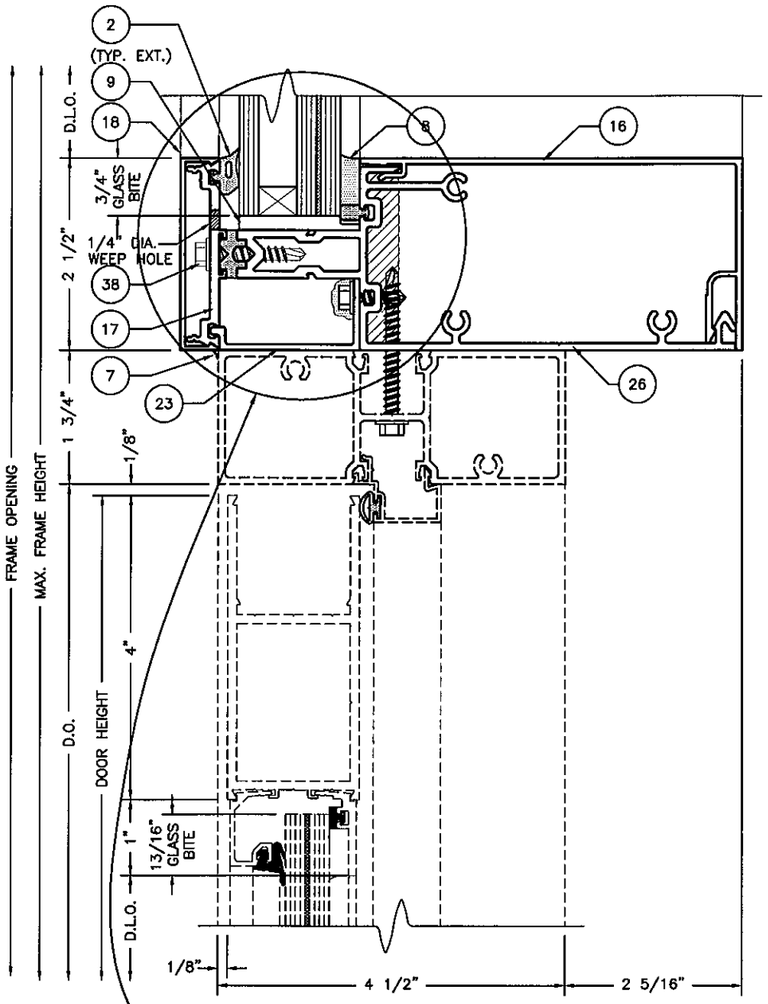

13 / 10 **DETAIL**
SCALE: 1:2

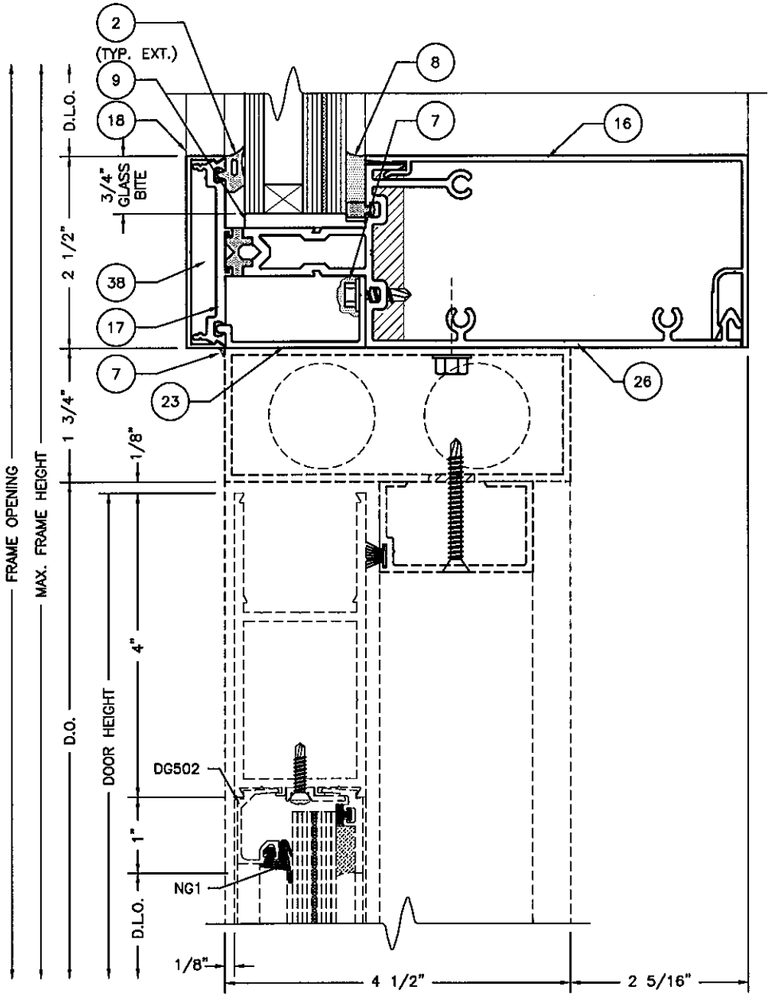

13A / 10 **DETAIL**
SCALE: 1:2

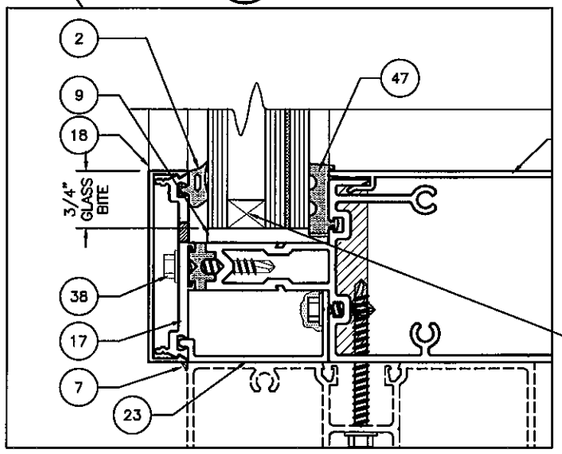

DRY GLAZE HEADER

SPACER:
1/2" AIR SPACE WITH AN ALUMINUM BOX SPACER AROUND THE PERIMETER OF GLASS

* PRIMARY SEALANT:
TYPE PIB-29 MANUFACTURED BY ADCO

⚠1 SECONDARY SEALANT:
TYPE GE-3723 A&B (TWO PART) SILICONE MANUFACTURED BY GE

ELIZABETH A. BROADWAY, P.E. LICENSE NO. 38558 STATE OF FLORIDA PROFESSIONAL ENGINEER

ELIZABETH A. BROADWAY
PROFESSIONAL ENGINEER
FLORIDA REGISTRATION NO. 38558

10/6/11

BROADWAY ENGINEERING, P.A.
CIVIL, MECHANICAL, STRUCTURAL AND BUILDING DESIGN
See Us At www.Broadway-Eng.Com
1335 W. Cass Street
Tampa, Florida 33606 813-251-9244
Fax 813-251-9330 Bus. Email: Info@Broadway-Eng.Com
Cadd. Email: DGorr@Broadway-Eng.Com
BE-3894 Certificate of Authorization No. 4599

NOTICE OF ACCEPTANCE

Approved as complying with the Florida Building Code
Date 10/13/2011
NOA# 11-0513.02
Miami Dade Product Control
By

REV	BY	DATE	DESCRIPTION
1	BE	7/18/11	PER MDAHC-DADE
2	BE	8/30/11	PER MDAHC-DADE
—	—	—	—

Coral
Architectural Products
3010 RICE MINE ROAD, TUSCALOOSA, AL 35406
PHONE: 800-772-7737 FAX: 800-255-7320

PRODUCT APPROVAL DRAWINGS
PW257 IMPACT-RESISTANT CURTAIN WALL SYSTEM
PROTOCOLS: TAS 201-202-203
DOOR AND FRAMING DETAILS

DATE	5/10/2011
DRAWN	DEG
CHECKED	WS
APPROVED	EAB
PROJECT NO.	
DRAWING NO.	PW257_03
SHEET	10 OF 16

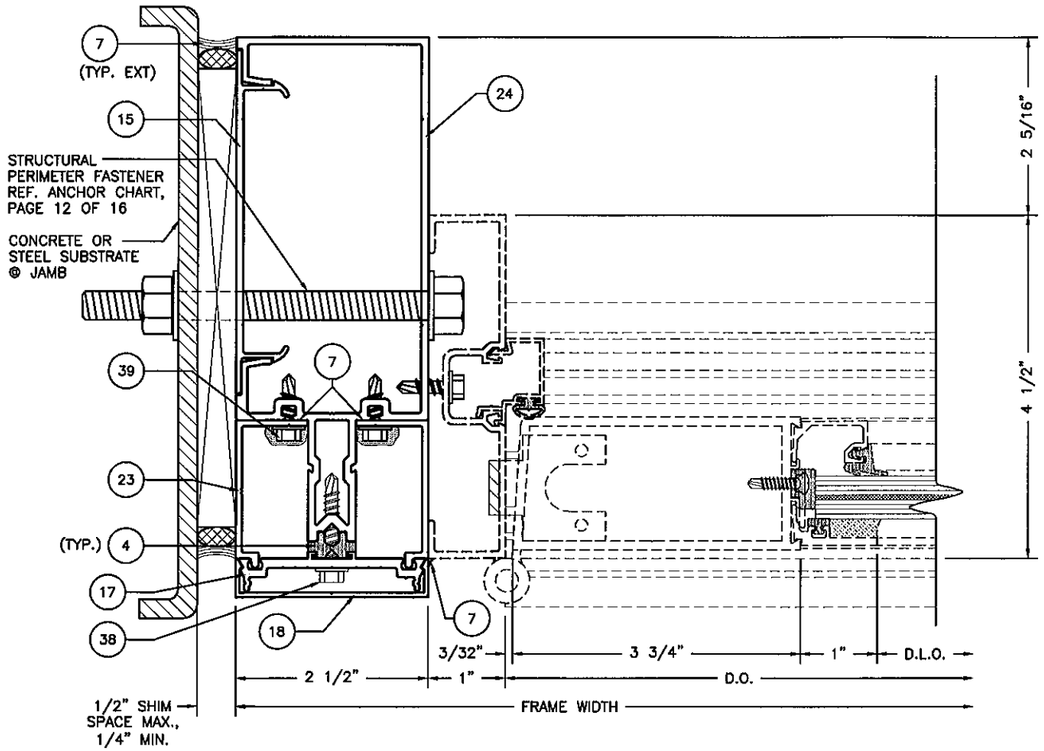

15/11 DETAIL
SCALE: 1:2

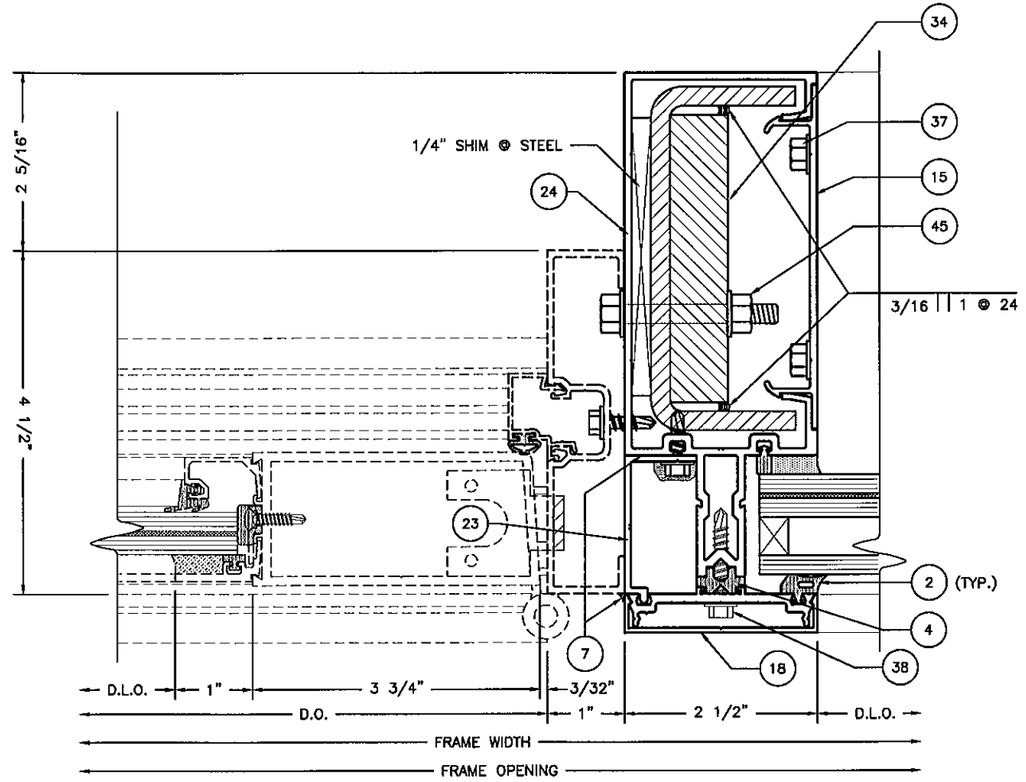

16/11 DETAIL
SCALE: 1:2

ELIZABETH A. BROADWAY
LICENSE No. 38558
STATE OF FLORIDA
PROFESSIONAL ENGINEER

Elizabeth A. Broadway
ELIZABETH A. BROADWAY
PROFESSIONAL ENGINEER
FLORIDA REGISTRATION NO. 38558
DATE 10/4/11

BROADWAY ENGINEERING, P.A.
CIVIL, MECHANICAL, STRUCTURAL AND BUILDING DESIGN
See Us At www.Broadway-Eng.Com
1335 W. Cass Street
Tampa, Florida 33606 813-251-9244
Fax 813-251-9330 Bus. Email: Info@Broadway-Eng.Com
Cadd. Email: DGorr@Broadway-Eng.Com
BE-3894 Certificate of Authorization No. 4599

NOTICE OF ACCEPTANCE

Approved as complying with the Florida Building Code
Date 10/13/2011
NOA# 11-0513.02
Miami-Dade Product Control
By

REV	BY	DATE	DESCRIPTION
1	BE	7/18/11	PER MDAHC-DADE
2	BE	9/30/11	PER MDAHC-DADE

Coral
Architectural Products
3010 RICE MINE ROAD, TUSCALOOSA, AL 35406
PHONE: 800-772-7737 FAX: 800-255-7320

PRODUCT APPROVAL DRAWINGS
PW257 IMPACT-RESISTANT
CURTAIN WALL SYSTEM
PROTOCOLS: TAS 201-202-203
DOOR AND FRAMING DETAILS

DATE	5/10/2011
DRAWN / CHECKED / APPROVED	DEG / WS / EAB
PROJECT NO.	
DRAWING NO.	PW257_03
SHEET	11 OF 16

ANCHOR CHART

Bolt Type	Location	Min. Embedment	Min. Edge Distance	Anchor Type Mark	
				65 PSF	80 PSF
1 Concrete - Min. 3,000 psi					
1/2" x 4 1/2 " Wedge Bolt (See Note 4)	Head/Sill	3 1/2"	2 1/2"	D	E, F
1/2" x 5" Wedge Bolt	Jamb	2 1/2"	2 1/2"	A	C
2 Steel - 1/4" Minimum Thickness					
1/2" - 13 x 2" Grade 5 HHB, Nut and Washers	Head/Sill	Through Bolt	N/A	D	D
1/2" - 13 x 4 1/2 " Grade 5 HHB, Nut and Washers	Jamb	Through Bolt	N/A	A	A

Notes:

1. All Anchors begin 4" from inside of Jamb or Vertical at head and sill Locations.
2. Jamb Anchors are at Horizontal Locations Only
3. Typical Applications shown above. Concrete and Steel can be used in same application
   (Example - 1. Concrete at Sill 2. Steel at Head)
4. Head/sill Anchor Type F is required for Mullion Spacing > 5.0 FT.

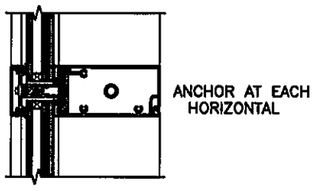

(A) **JAMB ANCHOR**

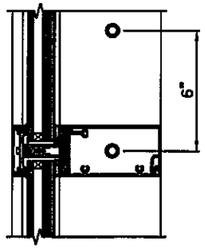

(C) **JAMB ANCHOR**

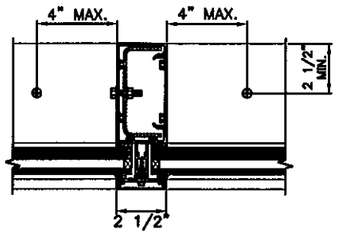

(D) **HEAD/SILL ANCHOR**

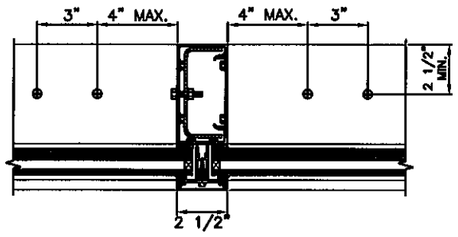

(E) **HEAD/SILL ANCHOR**

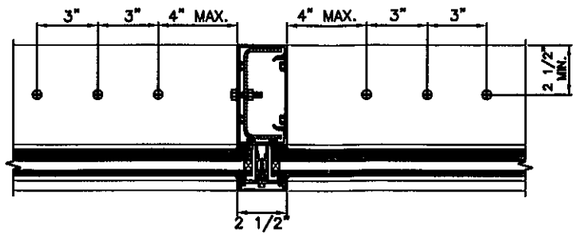

(F) **HEAD/SILL ANCHOR**

ELIZABETH A. BROADWAY
PROFESSIONAL ENGINEER
FLORIDA REGISTRATION NO. 38558

BROADWAY ENGINEERING, P.A.
CIVIL, MECHANICAL, STRUCTURAL AND BUILDING DESIGN
See Us At www.Broadway-Eng.Com
1335 W. Cass Street
Tampa, Florida 33606 813-251-9244
Fax 813-251-9330 Bus. Email: Info@Broadway-Eng.Com
Codd. Email: DGorr@Broadway-Eng.Com
BE-3894 Certificate of Authorization No. 4599

NOTICE OF ACCEPTANCE

Approved as complying with the Florida Building Code
Date 10/13/2011
NOA# 11-0513.02
Miami-Dade Product Control
By

REV	BY	DATE	DESCRIPTION
1	BE	7/18/11	PER MIAMI-DADE
2	BE	9/30/11	PER MIAMI-DADE
—	—	—	—
—	—	—	—

Coral
Architectural Products
3010 RICE MINE ROAD, TUSCALOOSA, AL 35406
PHONE: 800-772-7737 FAX: 800-255-7320

PRODUCT APPROVAL DRAWINGS
PW257 IMPACT-RESISTANT
CURTAIN WALL SYSTEM
PROTOCOLS: TAS 201-202-203
ANCHOR CHART

DATE 5/10/2011
DRAWN DEG | CHECKED WS | APPROVED EAB
PROJECT NO.
DRAWING NO. PW257_03
SHEET 12 OF 16

BILL OF MATERIALS

ITEM NO.	P/N	DESCRIPTION	DIMENSIONS	MATERIAL	MANUFACTURER	NOTES
1		NOT USED				
2	NG10	EXTERIOR GLAZING GASKET	0.250 SPACE	EPDM	VARIES	+/- 70 DUROMETER
3	NG11	EXTERIOR PERIMETER GASKET	0.300 SPACE	EPDM	VARIES	+/- 70 DUROMETER
4	NG12	PRESSURE BAR GASKET (ISOLATOR)	0.140 SPACE	EPDM	VARIES	+/- 70 DUROMETER
5	NG14	INTERIOR SPACER GASKET	0.250 SPACE	EPDM	VARIES	+/- 70 DUROMETER
6	SM5601	JOINT SEALANT TAPE	0.500 X 0.125 X VARIES	BUTYL	SCHNEE-MOOREHEAD	
7	795	SILICONE - PERIMETER SEALANT	FILL SPACE	SILICONE	DOW CORNING	USED @ PERIMETER
8	995	SILICONE - GLASS TO METAL	FILL SPACE	SILICONE	DOW CORNING	GLASS TO METAL AND INTERNAL
9	SB18	SETTING BLOCK @ SILL & HORIZONTAL	1.562 X 0.188 X 4.000	EPDM	VARIES	2 PER LITE, SHORE HARDNESS "A"
10	SP204	END DAM @ CAPTURED MULLION	1.287 X 1.787 X 0.745	EVA FOAM	CORAL INDUSTRIES, INC.	LOCATE 1 @ EACH END OF HORIZONTAL
11	SP208	BRIDGE DAM @ B.G. MULLION	3.123 X 1.562 X 0.745	EVA FOAM	CORAL INDUSTRIES, INC.	LOCATE 1 @ HORIZONTAL AND B.G. MULLION
12	SP211	MULLION CAP	3.000 X 2.691 X 0.048	6063-T6 ALUMINUM	CORAL INDUSTRIES, INC.	LOCATE @ TOP AND BOTTOM OF VERTICAL
13		NOT USED				
14	PW151	B.G. MULLION	2.500 X 5.000 X 0.094	6063-T6 ALUMINUM	CORAL INDUSTRIES, INC.	
15	PW202	OPEN BACK MULLION FILLER	0.681 X 4.484 X 0.094	6063-T6 ALUMINUM	CORAL INDUSTRIES, INC.	
16	PW203	HEAD/ SILL/ HORIZONTAL TRIM	2.500 X 4.980 X 0.078	6063-T6 ALUMINUM	CORAL INDUSTRIES, INC.	
17	PW204	PRESSURE BAR	2.443 X 0.433 X 0.125	6063-T6 ALUMINUM	CORAL INDUSTRIES, INC.	
18	PW205	FACE COVER	2.500 X 0.500 X 0.062	6063-T6 ALUMINUM	CORAL INDUSTRIES, INC.	
19	PW208	FEMALE HALF 90° CORNER	1.625 X 6.110 X 0.094	6063-T6 ALUMINUM	CORAL INDUSTRIES, INC.	
20	PW209	MALE HALF 90° CORNER	1.875 X 6.110 X 0.094	6063-T6 ALUMINUM	CORAL INDUSTRIES, INC.	
21	PW210	INTERIOR CORNER TRIM	2.500 X 1.288 X 0.078	6063-T6 ALUMINUM	CORAL INDUSTRIES, INC.	
22		NOT USED				
23	PW613	POCKET FILLER FOR PW650	0.937 X 1.943 X 0.078	6063-T6 ALUMINUM	CORAL INDUSTRIES, INC.	
24	PW650	VERTICAL MULLION	2.500 X 6.593 X 0.094	6063-T6 ALUMINUM	CORAL INDUSTRIES, INC.	
25	PW652	HEAD/SILL	2.390 X 6.495 X 0.094	6063-T6 ALUMINUM	CORAL INDUSTRIES, INC.	
26	PW655	INTERMEDIATE HORIZONTAL	2.390 X 6.495 X 0.094	6063-T6 ALUMINUM	CORAL INDUSTRIES, INC.	
27	PW656	GLAZING TEE - 90° CORNER	3.334 X 3.334 X 0.094	6063-T6 ALUMINUM	CORAL INDUSTRIES, INC.	
28		NOT USED				
29		NOT USED				
30		NOT USED				

(CONTINUED ON SHEET 14)

REV	BY	DATE	DESCRIPTION
1	BE	7/18/11	PER MIAMI-DADE
2	BE	9/30/11	PER MIAMI-DADE

Coral
Architectural Products
3010 RICE MINE ROAD, TUSCALOOSA, AL 35406
PHONE: 800-772-7737 FAX: 800-255-7320

PRODUCT APPROVAL DRAWINGS
PW257 IMPACT-RESISTANT
CURTAIN WALL SYSTEM
PROTOCOLS: TAS 201-202-203

BILL OF MATERIALS

ELIZABETH A. BROADWAY
PROFESSIONAL ENGINEER
FLORIDA REGISTRATION NO. 38558

BROADWAY ENGINEERING, P.A.
CIVIL, MECHANICAL, STRUCTURAL AND BUILDING DESIGN
See Us At www.Broadway-Eng.Com
1335 W. Cass Street
Tampa, Florida 33606 813-251-9244
Fax 813-251-9330 Bus. Email: Info@Broadway-Eng.Com
Cadd. Email: DGorr@Broadway-Eng.Com
BE-3894 Certificate of Authorization No. 4599

NOTICE OF ACCEPTANCE

Approved as complying with the Florida Building Code
Date 10/13/2011
NOA# 11-0513.02
Miami Dade Product Control
By

DATE 5/10/2011
DRAWN DEG | CHECKED WS | APPROVED EAB
PROJECT NO.
DRAWING NO. PW257_03
SHEET 13 OF 16

BILL OF MATERIALS

ITEM NO.	P/N	DESCRIPTION	DIMENSIONS	MATERIAL	MANUFACTURER	NOTES
31	SR150	REINFORCEMENT CHANNEL	4.500 X 1.875 X 0.250	A36 STEEL	VARIES	STEEL REINFORCEMENT FOR (14) AND (24)
32	SR504	REINFORCEMENT CHANNEL	4.625 X 1.4375 X 0.250	A36 STEEL	VARIES	STEEL REINFORCEMENT FOR (19) AND (20)
33		SR150 WITH REINFORCEMENT BAR	3.750 X 0.500	A36 STEEL	VARIES	STEEL REINFORCEMENT FOR (14) AND (24)
34		SR150 WITH REINFORCEMENT BAR	3.750 X 0.750	A36 STEEL	VARIES	STEEL REINFORCEMENT FOR (14) AND (24)
35		NOT USED				
36		NOT USED				
37	AS16	FASTENER	#14 X 1" HHSTS	STEEL	VARIES	TYP. SPLINE SCREW
38	AS32	FASTENER	#12 x 1-1/4" HWH #3 SELF DRILL	STEEL	VARIES	
39	AS25	FASTENER	#12 x 3/4" HWH SELF DRILL	STEEL	VARIES	
40	AS37	FASTENER	#12 X 2" HWH SELF DRILL	STEEL	VARIES	
41	FASTENER	PERIMETER ANCHOR TO STEEL SUBSTRATE	1/2"-13 X 2" BOLT WITH WASHER AND NUT	STEEL, SAE GRADE 5 OR ASTM A449	VARIES	SEE ANCHOR CHART
42	FASTENER	PERIMETER ANCHOR TO STEEL SUBSTRATE	1/2"-13 X 4-1/2" BOLT WITH WASHER AND NUT	STEEL, SAE GRADE 5 OR ASTM A449	VARIES	SEE ANCHOR CHART
43	FASTENER	PERIMETER ANCHOR TO CONCRETE SUBSTRATE	1/2"X3-1/2" MIN. EMBED WEDGE ANCHOR POWERS	STEEL, AISI 1020/1040 OR 10B21	POWERS	SEE ANCHOR CHART FOR EMBEDMENT DEPTHS AND EDGE DISTANCE
44		NOT USED				
45	FASTENER	STEEL REINFORCEMENT ATTACHMENT	1/4-20 X 2" BOLT WITH WASHER AND NUT	STEEL, SAE GRADE 5 OR ASTM A449	VARIES	
46	FASTENER	THROUGH BOLT	1/4-20 X 3" BOLT WITH WASHER AND NUT	STEEL, SAE GRADE 5 OR ASTM A449	VARIES	USED @ HORIZONTALS
47	NG16	DRY GLAZE INTERIOR SPACER GASKET	0.260 SPACE	EPDM	VARIES	MEETS ASTM C-864, +/- 70 DUROMETER
48	PW658	CORNER FACE COVER	4.064 X .500 X 0.078	6063-T6 ALUM	CORAL INDUSTRIES, INC.	
49	PW654	CORNER PRESSURE BAR	3.954 X 3.954 X .125	6063-T6 ALUM	CORAL INDUSTRIES, INC.	
50	SP214	CORNER MULLION CAP	4.000 X 3.826 X 0.048	6063-T6 ALUM	CORAL INDUSTRIES, INC.	LOCATE @ TOP AND BOTTOM OF VERTICAL CORNER MULLION
51		NOT USED				
52		NOT USED				
53		NOT USED				
54		NOT USED				
55		NOT USED				

REV	BY	DATE	DESCRIPTION
1	BE	7/18/11	PER MDAHC-DADE
2	BE	8/30/11	PER MDAHC-DADE

Coral
Architectural Products
3010 RICE MINE ROAD, TUSCALOOSA, AL 35406
PHONE: 800-772-7737 FAX: 800-255-7320

PRODUCT APPROVAL DRAWINGS
PW257 IMPACT-RESISTANT
CURTAIN WALL SYSTEM
PROTOCOLS: TAS 201-202-203
BILL OF MATERIALS

ELIZABETH A. BROADWAY
LICENSE
38558
STATE OF FLORIDA

ELIZABETH A. BROADWAY
PROFESSIONAL ENGINEER
FLORIDA REGISTRATION NO. 38558
10/6/11

BROADWAY ENGINEERING, P.A.
CIVIL, MECHANICAL, STRUCTURAL AND BUILDING DESIGN
See Us At www.Broadway-Eng.Com
1335 W. Cass Street
Tampa, Florida 33606 813-251-9244
Fax 813-251-9330 Bus. Email: Info@Broadway-Eng.Com
Cadd. Email: DGorr@Broadway-Eng.Com
BE-3894 Certificate of Authorization No. 4599

NOTICE OF ACCEPTANCE

Approved as complying with the Florida Building Code
Date 10/13/2011
NOA# 11-0513.02
Miami Dade Product Control
By

DATE	5/10/2011
DRAWN DEG / CHECKED WS / APPROVED EAB	
PROJECT NO.	
DRAWING NO.	PW257_03
SHEET	14 OF 16

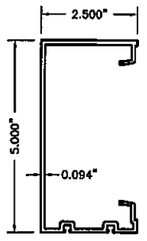

14 B.G. MULLION

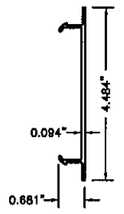

15 OPEN BACK MULLION FILLER

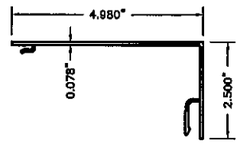

16 HEAD/SILL/HORIZONTAL TRIM

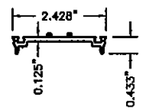

17 PRESSURE BAR

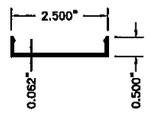

18 FACE COVER

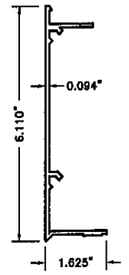

19 FEMALE HALF 90° CORNER

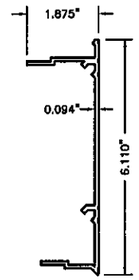

20 MALE HALF 90° CORNER

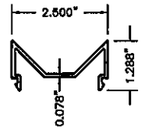

21 INTERIOR CORNER TRIM

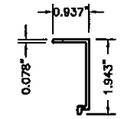

23 POCKET FILLER

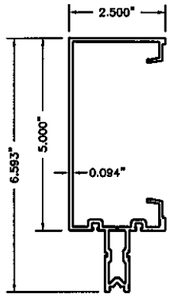

24 VERTICAL MULLION

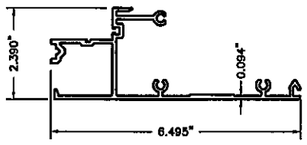

25 HEAD/SILL

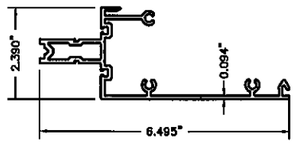

26 INTERMEDIATE HORIZONTAL

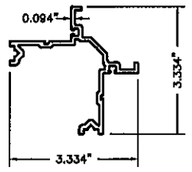

27 GLAZING TEE 90° CORNER

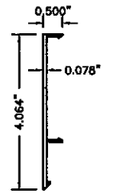

48 CORNER FACE COVER

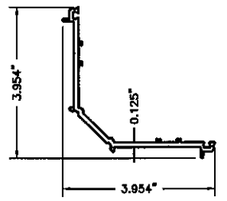

49 CORNER PRESSURE BAR

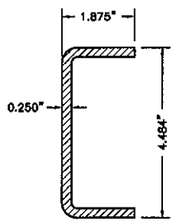

31 STEEL REINFOREMENT

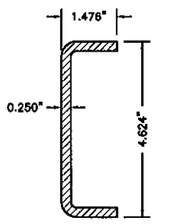

32 STEEL REINFOREMENT

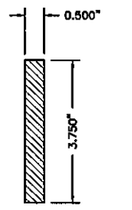

33 STEEL REINFOREMENT

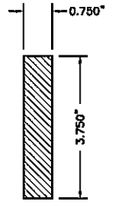

34 STEEL REINFOREMENT

REV	BY	DATE	DESCRIPTION
1	BE	7/18/11	PER MIAMI-DADE
2	BE	8/30/11	PER MIAMI-DADE

Coral
Architectural Products
3010 RICE MINE ROAD, TUSCALOOSA, AL 35406
PHONE: 800-772-7737 FAX: 800-255-7320

PRODUCT APPROVAL DRAWINGS
PW257 IMPACT-RESISTANT
CURTAIN WALL SYSTEM
PROTOCOLS: TAS 201-202-203
DIE DRAWINGS

ELIZABETH A. BROADWAY, P.E. LICENSE NO. 38558 STATE OF FLORIDA

ELIZABETH A. BROADWAY
PROFESSIONAL ENGINEER
FLORIDA REGISTRATION NO. 38558

BROADWAY ENGINEERING, P.A.
CIVIL, MECHANICAL, STRUCTURAL AND BUILDING DESIGN
See Us At www.Broadway-Eng.Com
1335 W. Cass Street
Tampa, Florida 33606 813-251-9244
Fax 813-251-9330 Bus. Email: Info@Broadway-Eng.Com
Cadd. Email: DGorr@Broadway-Eng.Com
BE-3894 Certificate of Authorization No. 4599

NOTICE OF ACCEPTANCE

Approved as complying with the Florida Building Code
Date 10/13/2011
NOA# 11-0513.02
Miami-Dade Product Control
By

DATE	5/10/2011	
DRAWN DEG	CHECKED WS	APPROVED EAB
PROJECT NO.		
DRAWING NO.	PW257_03	
SHEET	15 OF 16	