MIAMI-DADE COUNTY
BUILDING AND NEIGHBORHOOD COMPLIANCE DEPARTMENT (BNC)
BOARD AND CODE ADMINISTRATION DIVISION

MIAMI-DADE COUNTY
PRODUCT CONTROL SECTION
11805 SW 26 Street, Room 208
Miami, Florida 33175-2474
T (786) 315-2590 F (786) 315-2599
www.miamidade.gov/building/

NOTICE OF ACCEPTANCE (NOA)

HWD Acquisition, Inc. dba Hurd Windows & Doors
575 South Whelen Avenue
Medford, WI 54451

SCOPE:

This NOA is being issued under the applicable rules and regulations governing the use of construction materials. The documentation submitted has been reviewed and accepted by Miami-Dade County BNC - Product Control Section to be used in Miami Dade County and other areas where allowed by the Authority Having Jurisdiction (AHJ).

This NOA shall not be valid after the expiration date stated below. The Miami-Dade County Product Control Section (In Miami Dade County) and/or the AHJ (in areas other than Miami Dade County) reserve the right to have this product or material tested for quality assurance purposes. If this product or material fails to perform in the accepted manner, the manufacturer will incur the expense of such testing and the AHJ may immediately revoke, modify, or suspend the use of such product or material within their jurisdiction. BNC reserves the right to revoke this acceptance, if it is determined by Miami-Dade County Product Control Section that this product or material fails to meet the requirements of the applicable building code.

This product is approved as described herein, and has been designed to comply with the Florida Building Code, including the High Velocity Hurricane Zone.

DESCRIPTION: Series "Feel Safe" Aluminum Clad Wood Awning Window – L.M.I.

APPROVAL DOCUMENT: Drawing No. **1405**, titled "Feel Safe Aluminum Clad Wood Impact Awning Window", sheets 1 through 5 of 5, prepared by W. W. Schaefer Engineering & Consulting, P. A., dated 07/21/05, with revision "**B1**", dated 06/29/11, signed and sealed by Warren W. Schaefer, P. E., bearing the Miami–Dade County Product Control Revision stamp with the Notice of Acceptance number and expiration date by the Miami–Dade County Product Control Section.

MISSILE IMPACT RATING: Large and Small Missile Impact Resistant

LABELING: Each unit shall bear a permanent label with the manufacturer's name or logo, city, state, model/series, and following statement: "Miami-Dade County Product Control Approved", unless otherwise noted herein.

RENEWAL of this NOA shall be considered after a renewal application has been filed and there has been no change in the applicable building code negatively affecting the performance of this product.

TERMINATION of this NOA will occur after the expiration date or if there has been a revision or change in the materials, use, and/or manufacture of the product or process. Misuse of this NOA as an endorsement of any product, for sales, advertising or any other purposes shall automatically terminate this NOA. Failure to comply with any section of this NOA shall be cause for termination and removal of NOA.

ADVERTISEMENT: The NOA number preceded by the words Miami-Dade County, Florida, and followed by the expiration date may be displayed in advertising literature. If any portion of the NOA is displayed, then it shall be done in its entirety.

INSPECTION: A copy of this entire NOA shall be provided to the user by the manufacturer or its distributors and shall be available for inspection at the job site at the request of the Building Official.

This NOA **revises and renews NOA # 09-0901.05** and consists of this page 1 and evidence pages E-1 and E-2, as well as approval document mentioned above.

The submitted documentation was reviewed by **Manuel Perez, P.E.**

MIAMI-DADE COUNTY APPROVED

HWD Acquisition, Inc. dba Hurd Windows & Doors

NOTICE OF ACCEPTANCE: EVIDENCE SUBMITTED

A. DRAWINGS

1. Manufacturer's die drawings and sections.

2. Drawing No **1405**, titled "Feel Safe Aluminum Clad Wood Impact Awning Window, Sheets 1 through 5 of 5, dated 7/21/05, with revision B1 dated 06/29/11, prepared by W. W. Schaefer Engineering & Consulting, P.A., signed and sealed by Warren W. Schaefer, P.E.

B. TESTS

1. Test reports on: 1) Air Infiltration Test, per FBC, TAS 202–94
2) Uniform Static Air Pressure Test, Loading per FBC TAS 202–94
3) Water Resistance Test, per FBC, TAS 202–94
4) Large Missile Impact Test per FBC, TAS 201–94
5) Cyclic Wind Pressure Loading per FBC, TAS 203–94
6) Forced Entry Test, per FBC 2411 3.2.1, TAS 202–94

along with marked–up drawings and installation diagram of 6 specimens each consisting of aluminum clad casement window, prepared by Stork Twin City Testing Corporation, Test Report No. **STCTC–180–7795.2**, dated 04/08/09, signed and sealed by Thomas Allan Kolden, P. E.
(Submitted under previous NOA No. 09–0901.05)

2. Test reports on: 1) Air Infiltration Test, per FBC, TAS 202–94
2) Uniform Static Air Pressure Test, Loading per FBC, TAS 202–94
3) Water Resistance Test, per FBC, TAS 202–94
4) Large Missile Impact Test per FBC, TAS 201–94
5) Cyclic Wind Pressure Loading per FBC, TAS 203–94
6) Forced Entry Test, per FBC 2411 3.2.1 and TAS 202–94

along with marked–up drawings and installation diagram of 6 specimens each consisting of aluminum clad casement window, prepared by Architectural Testing, Inc., Test Report No. **ATI–52274.04–602–18**, dated 07/07–28/04, signed and sealed by Joseph A. Reed, P. E.
(Submitted under previous NOA No. 06–0130.05)

Manuel Perez, P.E.
Product Control Examiner
NOA No. 11-0517.04
Expiration Date: June 29, 2016
Approval Date: July 14, 2011

B. TESTS (CONTINUED)

3. Test reports on: 1) Air Infiltration Test, per FBC, TAS 202–94
2) Uniform Static Air Pressure Test, Loading per FBC, TAS 202–94
3) Water Resistance Test, per FBC, TAS 202–94
4) Large Missile Impact Test per FBC, TAS 201–94
5) Cyclic Wind Pressure Loading per FBC, TAS 203–94
6) Forced Entry Test, per FBC 2411 3.2.1 and TAS 202–94
along with marked–up drawings and installation diagram of 6 specimens each consisting of aluminum clad awning window, prepared by Architectural Testing, Inc., Test Report No. **ATI–53394.03–602–18**, dated 09/14–16/04, signed and sealed by Joseph A. Reed, P. E.

(Submitted under previous NOA No. 06–0130.05)

C. CALCULATIONS:

1. Anchor Calculations and structural analysis, complying with FBC-2007, prepared by W. W. Schaefer Engineering & Consulting, P.A., dated 05/12/11, signed and sealed by Warren W. Schaefer, P.E.

2. Glazing complies with ASTM E1300-04.

D. QUALITY ASSURANCE

1. Miami-Dade Building and Neighborhood Compliance Department (BNC).

E. MATERIAL CERTIFICATIONS

1. Notice of Acceptance No. **09-0223.05** issued to **Solutia, Inc.** for their "**Saflex Multi-layer Glass Interlayer**" dated 04/08/09, expiring on 04/08/14.

F. STATEMENTS

1. Statement letter of conformance dated, 05/12/11, signed and sealed by Warren W. Schaefer, P.E.

2. Statement letter of no financial interest, dated 05/12/11, signed and sealed by Warren W. Schaefer, P.E.

3. Asset purchase and Sale Agreement dated October 15, 2008, among **Monarch Holdings, Inc.** and **Hurd Windows & Doors, Inc.** as Sellers and **HWD Acquisition, Inc.** as Purchaser.

G. OTHERS

1. Notice of Acceptance No. **09-0901.05**, issued to Hurd Windows & Doors, Inc. for their Series "Feel Safe" Aluminum Clad Wood Awning Window – L.M.I., approved on 11/10/09 and expiring on 06/29/11.

Manuel Perez, P.E.
Product Control Examiner
NOA No. 11-0517.04
Expiration Date: June 29, 2016
Approval Date: July 14, 2011

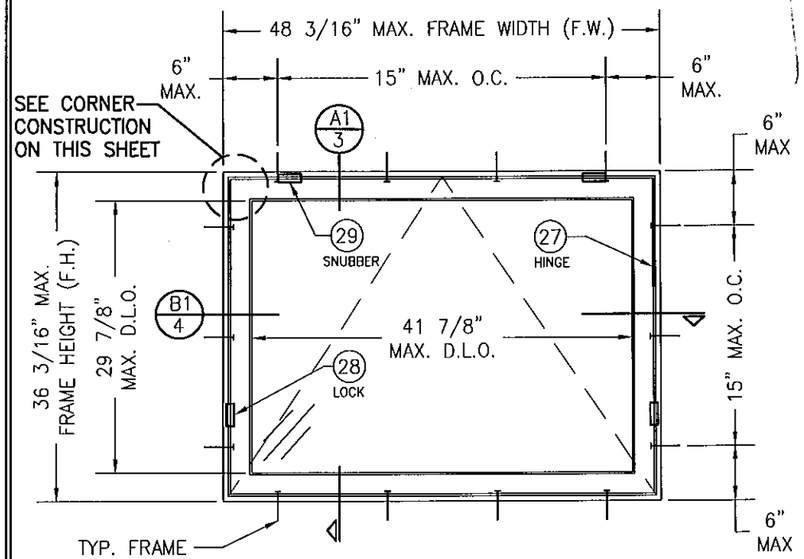

EXTERIOR ELEVATION
SINGLE WINDOW
(FRAME SCREW MOUNT)
SCALE: 3/4"=1'-0"

CORNER CONSTRUCTION:

WOOD FRAME: SQUARE CUT, RABBETED, SILICONE SEALED & SECURED WITH THREE (3) 16 GA. X 1/2" X 2" CROWN STAPLES.

FRAME CLAD: MITER CUT, JOINED WITH A CORNER KEY & TWO (2) NO. 7 X 1/2" SCREWS & SEALED WITH A FOAM GASKET.

WOOD SASH: MORTISE & TENON CONSTRUCTION AND SECURED WITH TWO (2) 14 GA. X 2 1/2" T-NAILS.

SASH CLAD: SQUARE CUT, BUTTED TOGETHER AND SNAP FIT TO SASH AND SEALED WITH SILICONE.

ALLOWABLE DESIGN PRESSURE (SINGLE & MULTIPLE WINDOWS)
+65/-70 PSF

LOCK & SNUBBER REQUIREMENTS
SNUBBERS: ONE (1) EACH SIDE OF WINDOW AT THE HEAD OF THE FRAME, 6 1/2" OFF CORNERS.
LOCKS: ONE (1) LOCK STRIKE EACH SIDE OF WINDOW AT SIDES.

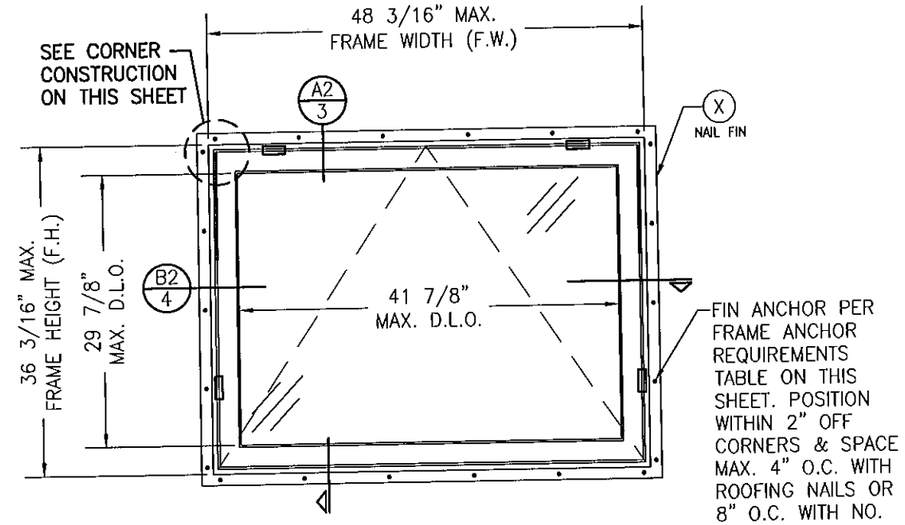

EXTERIOR ELEVATION
SINGLE WINDOW
(FIN MOUNT)
SCALE: 3/4"=1'-0"

FOR INFORMATION NOT SHOWN, SEE FRAME SCREW MOUNTED SINGLE WINDOW ELEVATION

FRAME ANCHOR REQUIREMENTS TABLE

OPENING TYPE (SUBSTRATE)	FRAME/FIN TO OPENING FASTENER TYPE	MINIMUM EMBED	MINIMUM EDGE DIST.
FRAME SCREWS			
MIN. 2X4 WOOD FRAME OR BUCK (MIN. GR. 3 & G=0.55)	NO. 10 SMS OR WOOD SCREW	1 1/4"	3/4"
MIN. 18 GA. 33 KSI METAL STUD	NO. 10 GR. 5 SELF TAP/DRILL SCREW	FULL	1/2"
MIN. 1/8" THK A36 STEEL	NO. 10 GR. 5 SELF TAP/DRILL SCREW	FULL	1/2"
MIN. 1/8" THK 6063-T5 ALUM.	NO. 10 GR. 5 SELF TAP/DRILL SCREW	FULL	1/2"
C-90 CMU/2500 PSI CONCRETE	(1) 1/4" CONCRETE SCREW	1 1/4"	2"
(2) NAILING FIN FASTENERS			
MIN. 2X4 WOOD FRAME OR BUCK (MIN. GR. 3 & G=0.55)	NO. 8 SMS SCREW	1 1/8"	1/2"
MIN. 2X4 WOOD FRAME OR BUCK (MIN. GR. 3 & G=0.55)	11 GA. ROOFING NAIL	1 3/4"	1/2"
MIN. 1/8" THK A36 STEEL	NO. 8 GR. 5 SELF TAP/DRILL SCREW	FULL	1/2"
MIN. 1/8" THK 6063-T5 ALUM.	NO. 8 GR. 5 SELF TAP/DRILL SCREW	FULL	1/2"

(1) CONCRETE SCREWS SHALL BE ELCO ULTRACONS, ITW RAMSET/RED HEAD TAPCONS, HILTI KWIK-CON II OR POWERS RAWL TAPPER (HARDENED STEEL OR S.S.).
(2) NAIL FIN SCREWS SHALL BE A PAN HEAD OR HEX HEAD SCREW OR HAVE A FLAT WASHER AT THE SCREW HEAD.

GENERAL NOTES:

1. THESE WINDOW SYSTEMS HAVE BEEN TESTED, ANALYZED & APPROVED FOR DESIGN PRESSURES NOT TO EXCEED THOSE SHOWN IN THE "ALLOWABLE DESIGN PRESSURE TABLE(S).
2. OPENINGS, BUCKING & BUCKING FASTENERS MUST BE PROPERLY DESIGNED & INSTALLED TO TRANSFER WIND LOADS TO THE STRUCTURE.
3. ALL HARDWARE & FASTENERS SHALL BE IN ACCORDANCE WITH THESE DRAWINGS & SHALL NOT VARY UNLESS SPECIFICALLY MENTIONED ON THE DRAWINGS. SPECIFIED ANCHOR EMBED TO BASE MATERIAL SHALL BE BEYOND WALL FINISH OR STUCCO.
4. THE DETAILS & SPECIFICATIONS SHOWN HEREIN REPRESENT THE PRODUCTS TESTED & PROPOSED FOR WATER, AIR, IMPACT, CYCLIC & UNIFORM STATIC AIR PRESSURE TESTING IN CONFORMANCE WITH THE FLORIDA BUILDING CODE PROTOCALS TAS-201, 202 & 203 FOR LARGE MISSILE IMPACT WINDOWS.
5. THESE WINDOW SYSTEMS HAVE BEEN DESIGNED IN ACCORDANCE WITH AND MEET THE REQUIREMENTS OF THE FLORIDA BUILDING CODE (FBC) INCLUDING HIGH VELOCITY HURRICANE ZONES (HVHZ).
6. IMPACT SHUTTERS ARE NOT REQUIRED WITH THESE WINDOWS.
7. ALL ANCHORS SECURING WINDOW FRAME TO PRESSURE TREATED BUCKS OR WOOD FRAMING SHALL BE CAPABLE OF RESISTING CORROSION CAUSED BY THE PRESSURE TREATING CHEMICALS IN THE WOOD.
8. DETERMINE THE POSITIVE & NEGATIVE DESIGN LOADS TO USE WHEN REFERENCING THESE DOCUMENTS IN ACCORDANCE WITH THE GOVERNING CODE AND GOVERNING WIND VELOCITY. FOR WIND LOAD CALCULATIONS IN ACCORDANCE WITH THE FLORIDA BUILDING CODE, A DIRECTIONALITY FACTOR OF Kd = 0.85 MAY BE APPLIED PER THE ASCE-7 STANDARD.
9. NO INCREASE IN ALLOWABLE STRESS HAS BEEN USED IN THE CERTIFICATION OF THIS PRODUCT. WIND LOAD DURATION FACTOR Cd = 1.6 WAS USED FOR WOOD SCREW ANALYSIS ONLY.
10. MATERIALS, INCLUDING BUT NOT LIMITED TO STEEL SCREWS, THAT COME INTO CONTACT WITH OTHER DISSIMILAR MATERIALS SHALL MEET THE REQUIREMENTS OF FLORIDA BUILDING CODE CHAPTER 20.

PRODUCT REVISED
as complying with the Florida Building Code
Acceptance No 11-0517.04
Expiration Date JUNE 29, 2016
By
Miami Dade Product Control

WARREN M. SCHAEFER LICENSE No. 44135 STATE OF FLORIDA PROFESSIONAL ENGINEER

DRAWN BY: S.T.R.	CHECKED BY: W.W.S.
PLOT: 1=16	DATE: 7/21/05

NO.	REVISION DESCRIPTION	BY	DATE
A1	ADD LG. GLAZING CONDITION	W.W.S.	08/24/09
B1	CHANGE MANUFACTURER NAME	WRM	06/29/11

DRAWING TITLE
FEEL SAFE ALUMINUM CLAD WOOD IMPACT AWNING WINDOW

MANUFACTURER
HWD ACQUISITION, INC. dba
HURD WINDOWS & DOORS
575 S. WHELEN AVE.
MEDFORD, WI 54451
800-433-4873

CONSULTANTS
W. W. SCHAEFER ENGINEERING & CONSULTING, P.A.
8895 N. MILITARY TRAIL SUITE C-204
PALM BEACH GARDENS, FL 33410
PHONE: 561-775-4902 FAX: 561-775-4903

CERTIFICATION
JUN 29 2011
WARREN M. SCHAEFER, P.E.
P.E. NO. 44135

DRAWING NO. 1405
REV. B
SHEET NO. 1 OF 5

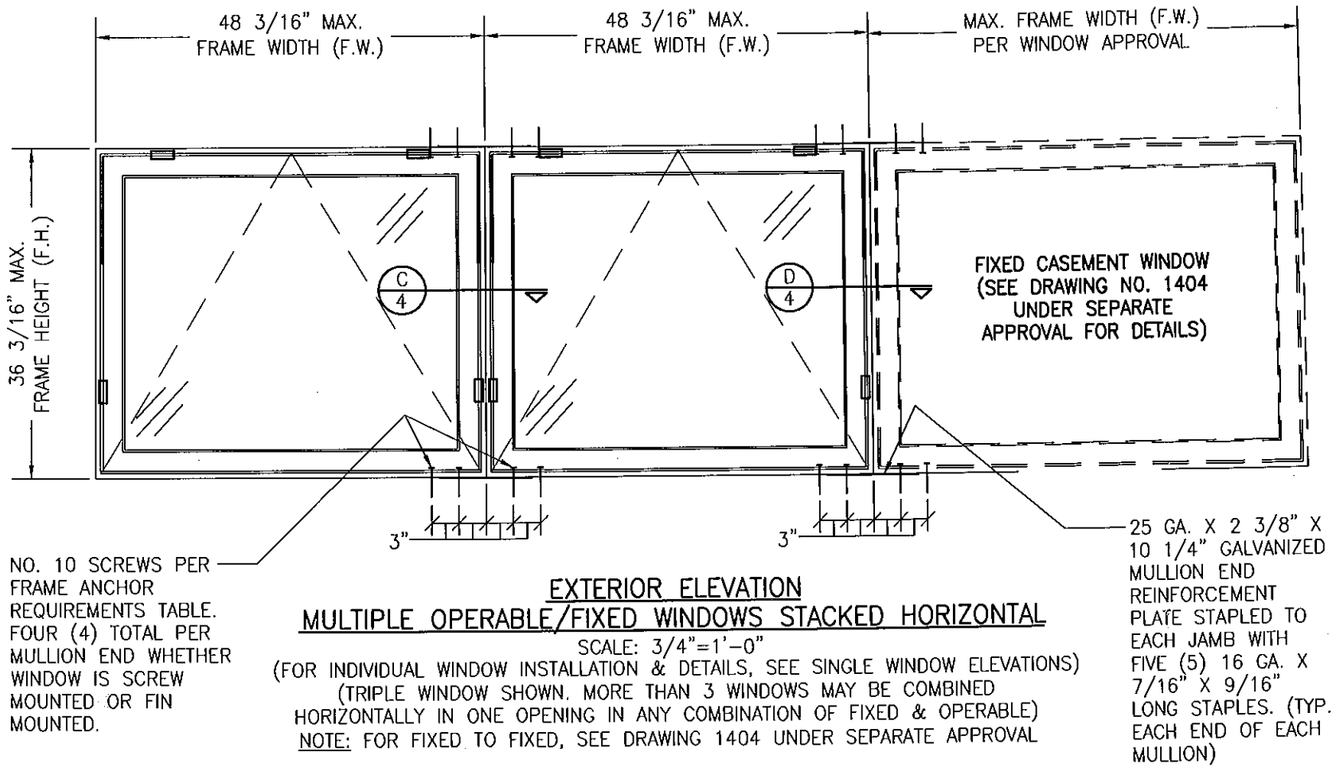

EXTERIOR ELEVATION
MULTIPLE OPERABLE/FIXED WINDOWS STACKED HORIZONTAL

SCALE: 3/4"=1'-0"

(FOR INDIVIDUAL WINDOW INSTALLATION & DETAILS, SEE SINGLE WINDOW ELEVATIONS)
(TRIPLE WINDOW SHOWN. MORE THAN 3 WINDOWS MAY BE COMBINED
HORIZONTALLY IN ONE OPENING IN ANY COMBINATION OF FIXED & OPERABLE)
NOTE: FOR FIXED TO FIXED, SEE DRAWING 1404 UNDER SEPARATE APPROVAL

FOR INFORMATION NOT SHOWN, SEE SINGLE
WINDOW ELEVATIONS ON SHEET 1

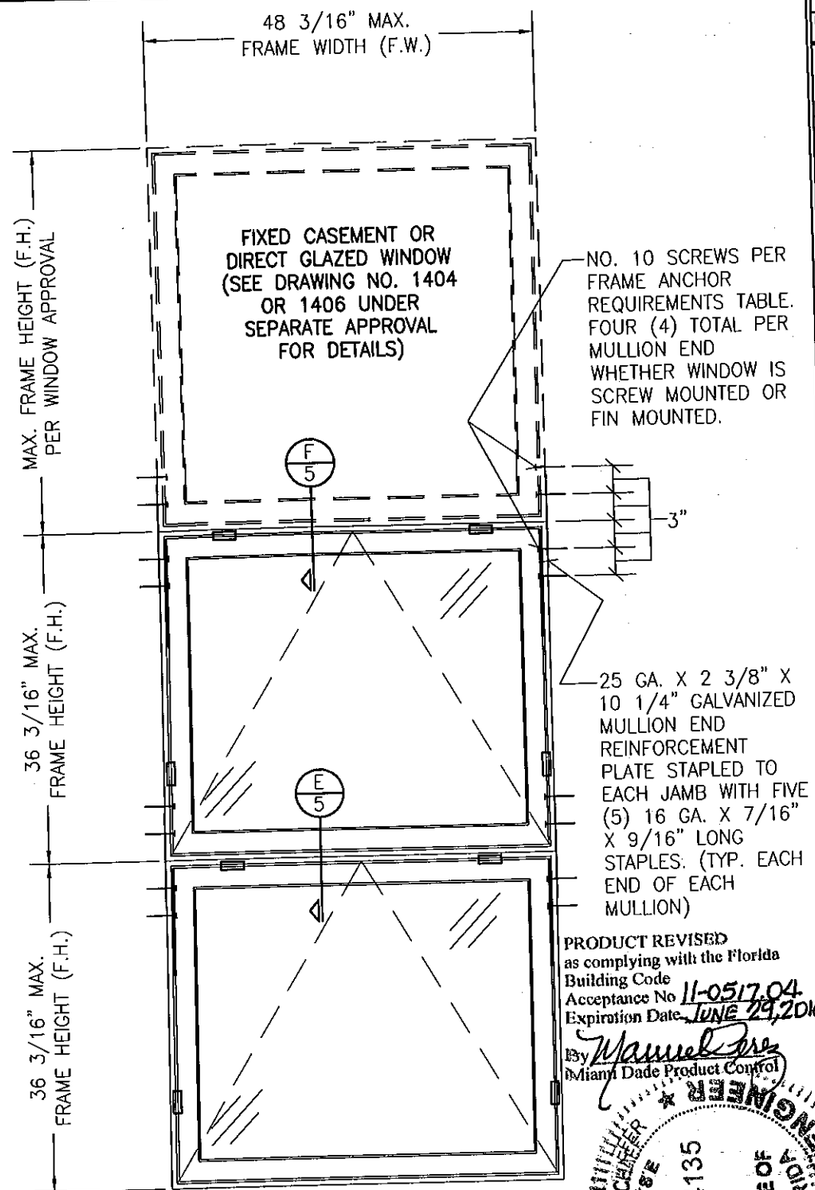

PRODUCT REVISED
as complying with the Florida
Building Code
Acceptance No 11-0517.04
Expiration Date JUNE 29,2016
By Manuel Perez
Miami Dade Product Control

WARREN W. SCHAEFER
LICENSE
No. 44135
STATE OF FLORIDA
PROFESSIONAL ENGINEER

EXTERIOR ELEVATION
MULTIPLE OPERABLE/FIXED WINDOWS STACKED VERTICAL

SCALE: 3/4"=1'-0"

(FOR INDIVIDUAL WINDOW INSTALLATION & DETAILS, SEE SINGLE WINDOW ELEVATIONS)
(TRIPLE WINDOW SHOWN. MORE THAN 3 WINDOWS MAY BE COMBINED
VERTICALLY IN ONE OPENING IN ANY COMBINATION OF FIXED & OPERABLE)

FOR INFORMATION NOT SHOWN, SEE SINGLE
WINDOW ELEVATIONS ON SHEET 1

DRAWN BY: S.T.R.	CHECKED BY: W.W.S.
PLOT: 1=16	DATE: 7/21/05

NO.	REVISION DESCRIPTION	BY	DATE

DRAWING TITLE
FEEL SAFE ALUMINUM CLAD WOOD IMPACT AWNING WINDOW

MANUFACTURER
HWD ACQUISITION, INC. dba
HURD WINDOWS & DOORS
575 S. WHELEN AVE.
MEDFORD, WI 54451
800-433-4873

CONSULTANTS
W. W. SCHAEFER ENGINEERING
& CONSULTING, P.A.
8895 N. MILITARY TRAIL SUITE C-204
PALM BEACH GARDENS, FL 33410
PHONE: 561-775-4902 FAX: 561-775-4903

CERTIFICATION
JUN 29 2011
WARREN W. SCHAEFER, P.E.
P.E. NO. 44135

DRAWING NO. 1405 REV. B

SHEET NO. 2 OF 5

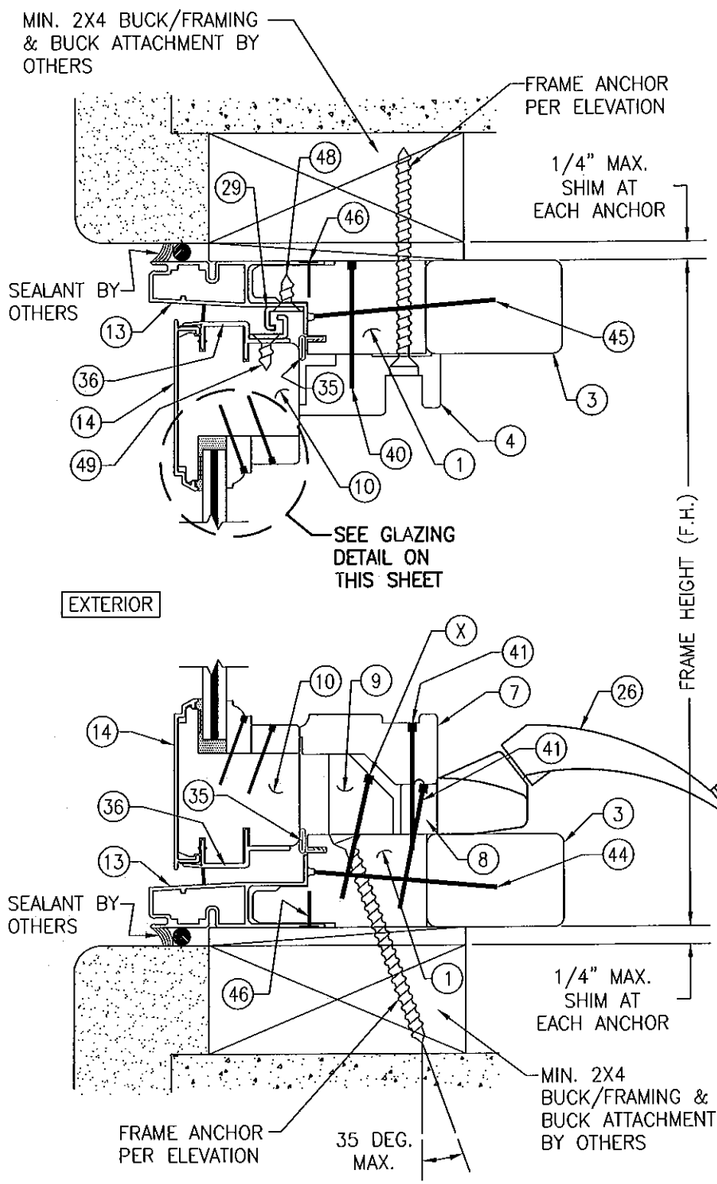

SECTION A1/3
SCALE: 1/2 FULL

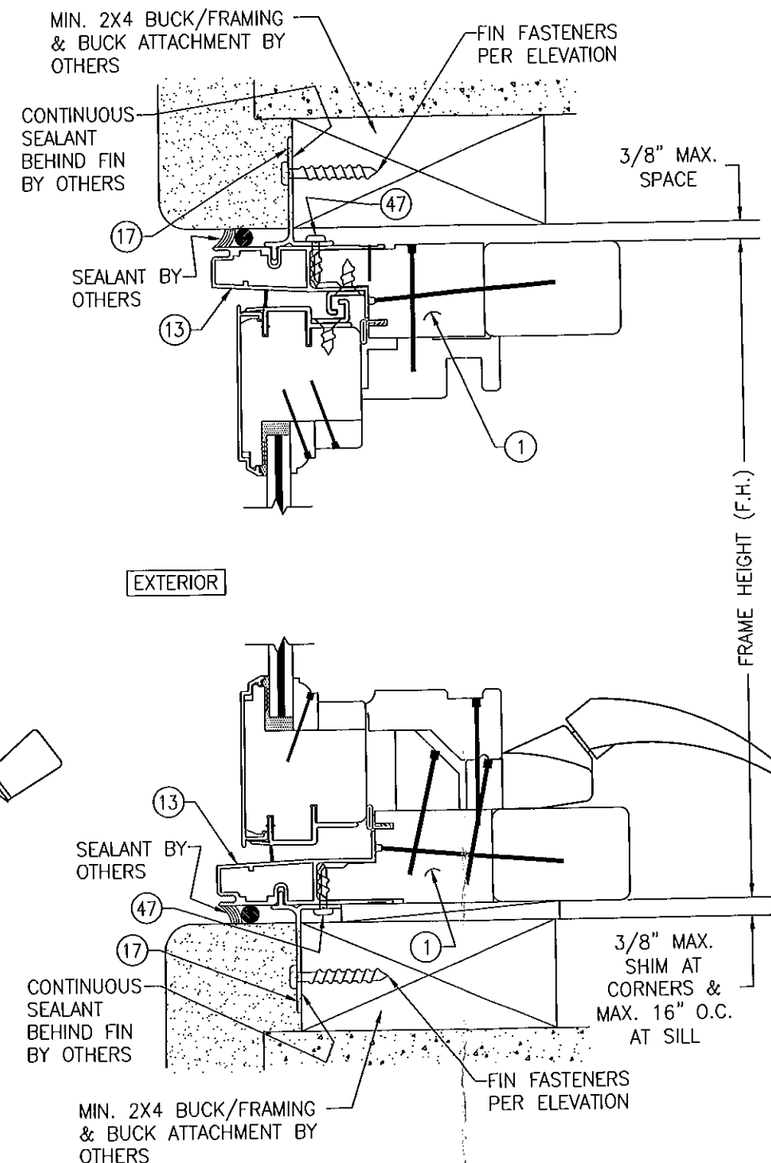

SECTION A2/3
SCALE: 1/2 FULL

(SEE SECTION A1/3 FOR DETAILS NOT SHOWN)

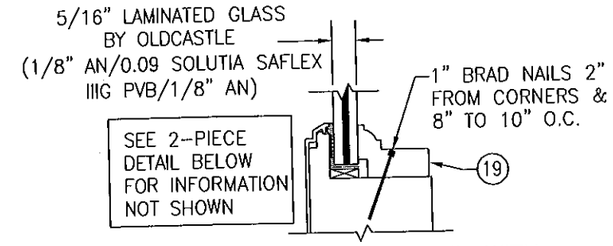

GLAZING DETAIL WITH 1-PIECE GLAZING BEAD

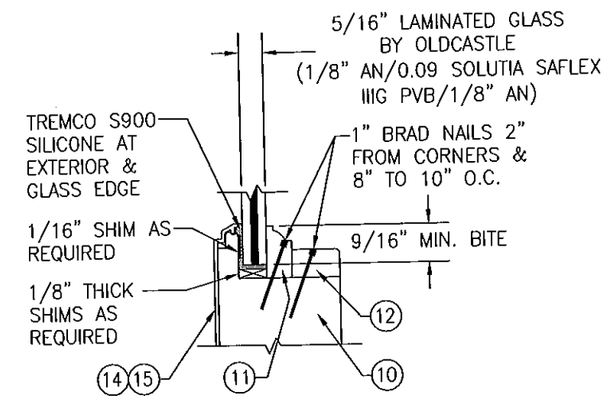

GLAZING DETAIL WITH 2-PIECE GLAZING BEAD

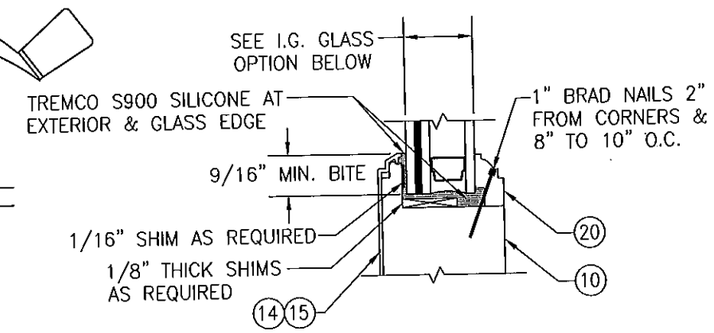

TYPICAL I.G. GLAZING DETAIL

I.G. GLASS OPTION: 7/8" LAMINATED I.G. BY OLDCASTLE (1/8" AN./0.09" SOLUTIA SAFLEX IIIG PVB/1/8" AN EXTERIOR; 7/16" SPACER; 1/8" TEMP. INTERIOR)

PRODUCT REVISED
as complying with the Florida Building Code
Acceptance No 11-0517.04
Expiration Date JUNE 29, 2016
By Manuel Perez
Miami-Dade Product Control

WARREN W. SCHAEFER LICENSE No. 44135 STATE OF FLORIDA PROFESSIONAL ENGINEER

DRAWN BY: S.T.R.	CHECKED BY: W.W.S.
PLOT: 1=2	DATE: 7/21/05

NO.	REVISION DESCRIPTION	BY	DATE

DRAWING TITLE
FEEL SAFE ALUMINUM CLAD WOOD IMPACT AWNING WINDOW

MANUFACTURER
HWD ACQUISITION, INC. dba
HURD WINDOWS & DOORS
575 S. WHELEN AVE.
MEDFORD, WI 54451
800-433-4873

CONSULTANTS
W. W. SCHAEFER ENGINEERING & CONSULTING, P.A.
8895 N. MILITARY TRAIL; SUITE C-204
PALM BEACH GARDENS, FL 33410
PHONE: 561-775-4902 FAX: 561-775-4903

CERTIFICATION
JUN 29 2011
WARREN W. SCHAEFER, P.E.
P.E. NO. 44135

DRAWING NO. 1405
REV. B
SHEET NO. 3 OF 5

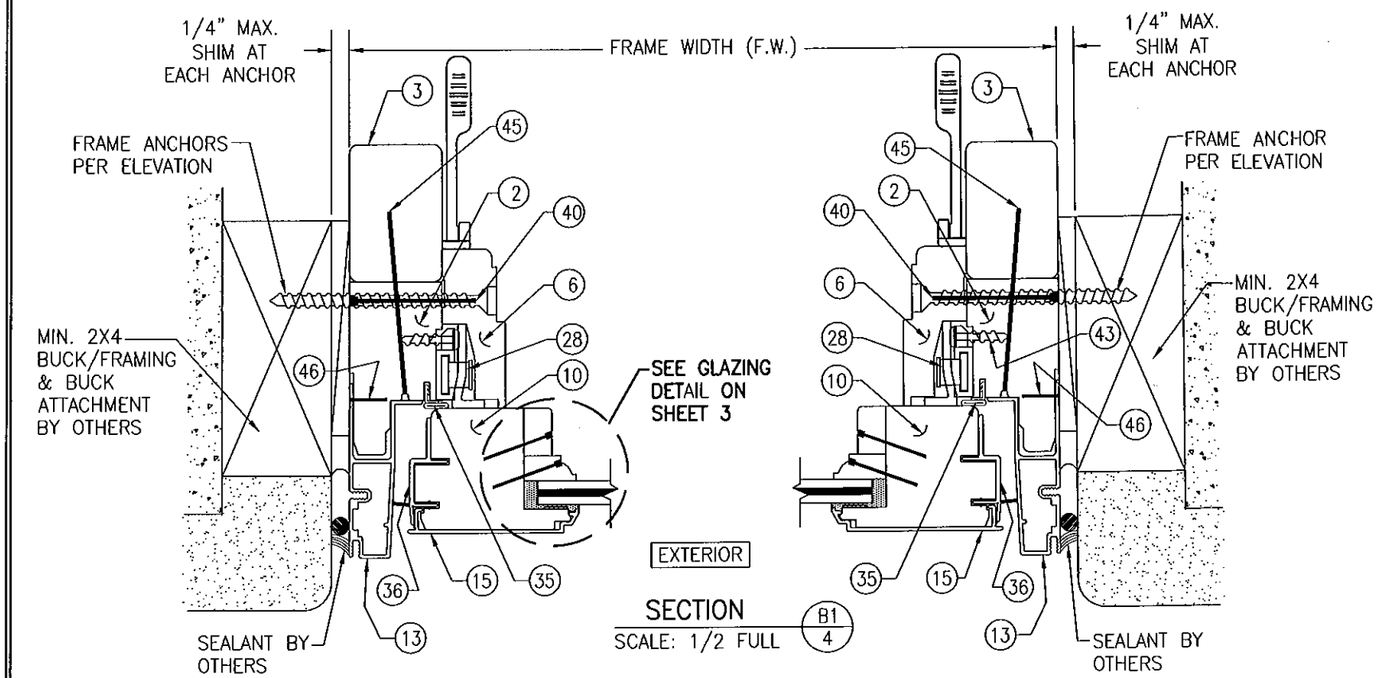

SECTION B1/4
SCALE: 1/2 FULL

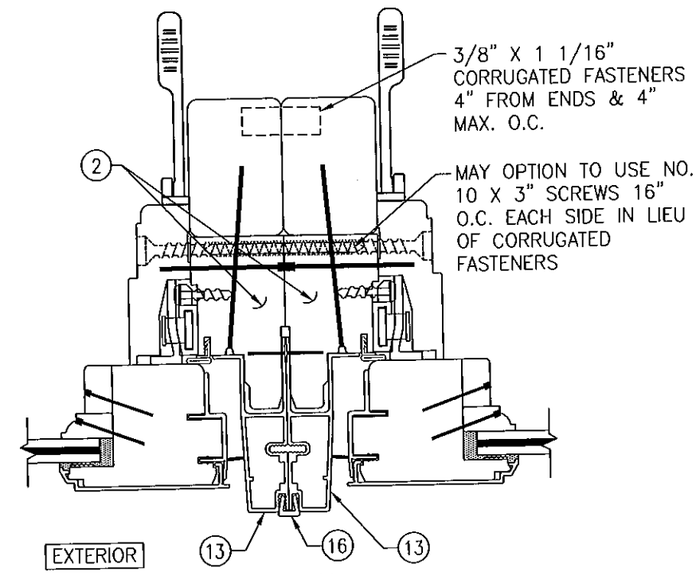

SECTION C/4
SCALE: 1/2 FULL

(SEE SECTION B1/4 FOR DETAILS NOT SHOWN)

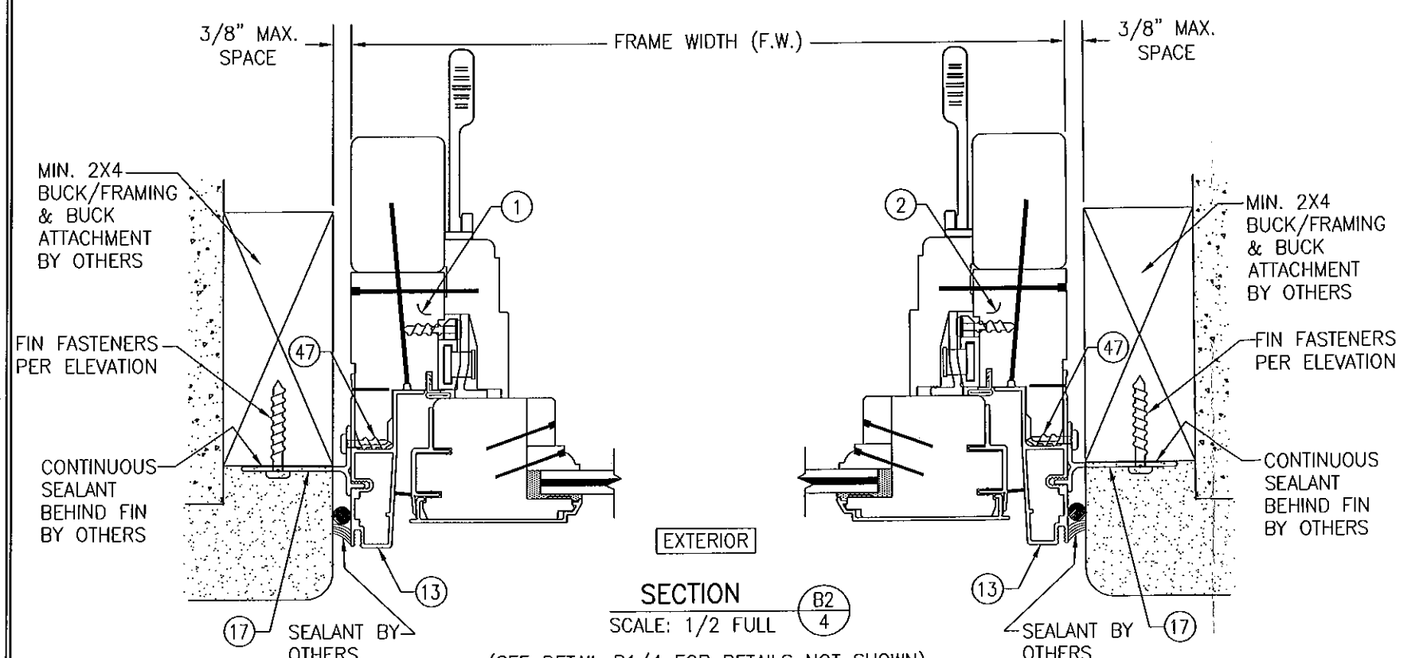

SECTION B2/4
SCALE: 1/2 FULL

(SEE DETAIL B1/4 FOR DETAILS NOT SHOWN)

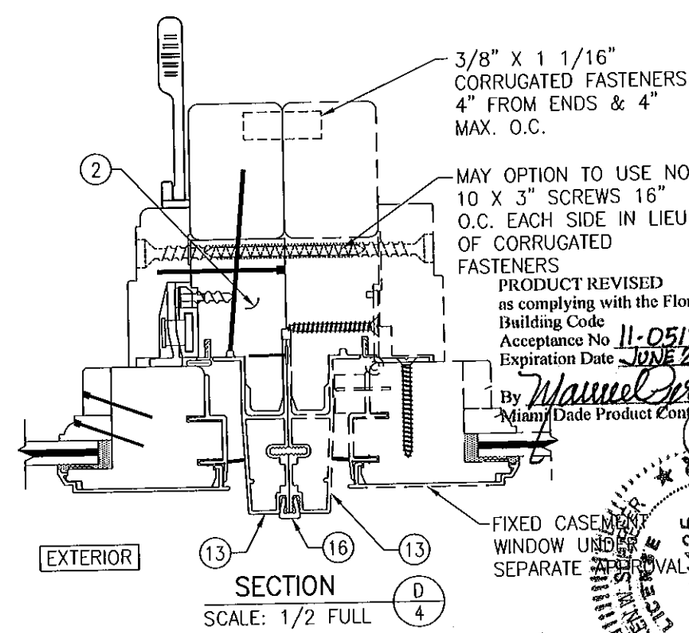

SECTION D/4
SCALE: 1/2 FULL

(SEE SECTION B1/4 FOR DETAILS NOT SHOWN)

PRODUCT REVISED
as complying with the Florida Building Code
Acceptance No 11-0517.04
Expiration Date JUNE 29, 2016
By Miami Dade Product Control

WARREN W. SCHAEFER, P.E. NO. 44135
LICENSE No. 44135
STATE OF FLORIDA
PROFESSIONAL ENGINEER

DRAWN BY: S.T.R.	CHECKED BY: W.W.S.
PLOT: 1=2	DATE: 7/21/05

NO.	REVISION DESCRIPTION	BY	DATE

DRAWING TITLE
FEEL SAFE ALUMINUM CLAD WOOD IMPACT AWNING WINDOW

MANUFACTURER
HWD ACQUISITION, INC. dba
HURD WINDOWS & DOORS
575 S. WHELEN AVE.
MEDFORD, WI 54451
800-433-4873

CONSULTANTS
W. W. SCHAEFER ENGINEERING & CONSULTING, P.A.
8895 N. MILITARY TRAIL; SUITE C-204
PALM BEACH GARDENS, FL 33410
PHONE: 561-775-4902 FAX: 561-775-4903

FLORIDA LICENSE
JUN 29 2011
WARREN W. SCHAEFER, P.E.
P.E. NO. 44135

DRAWING NO. 1405 REV. B
SHEET NO. 4 OF 5

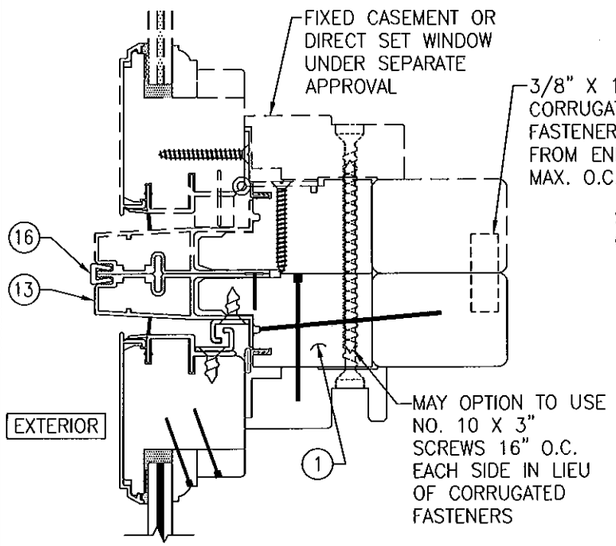

SECTION E/5
SCALE: 1/2 FULL

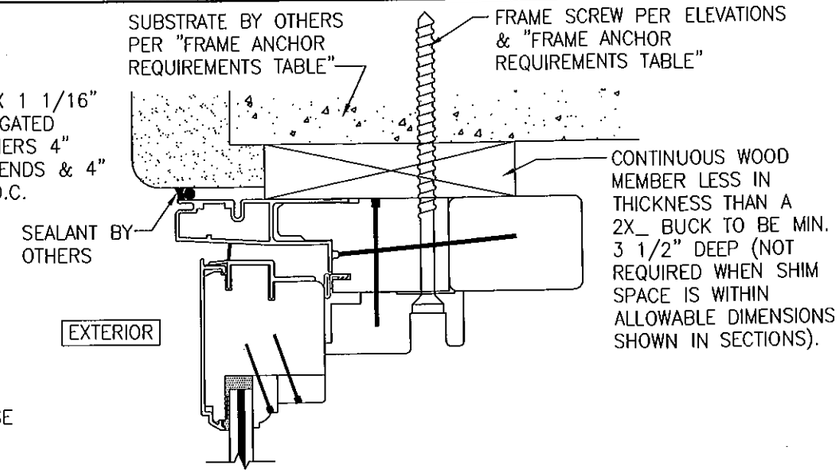

OPTIONAL DIRECT MOUNT DETAIL
TO BLOCK OR CONCRETE WITH SPACER OR SHIM
HEAD SECTION SHOWN, SIDES AND SILL SIMILAR

ITEM #	PART #	ITEM DESCRIPTION	MANUFACTURER/NOTES
		PARTS	
1	CCSE 215	HEAD, SILL, & HINGE JAMB	* PONDEROSA/SUGAR PINE
2	CCSE 223	LOCK SIDE JAMB	* PONDEROSA/SUGAR PINE
3	CAWN 225	JAMB EXTENDER	* PONDEROSA/SUGAR PINE
4	CAWN 260	HEAD JAMB STOP	* PONDEROSA/SUGAR PINE
6	CAWN 240	SIDE JAMB STOP	* PONDEROSA/SUGAR PINE
7	CAWN 285	SILL COVER	* PONDEROSA/SUGAR PINE
8	CAWN 290	SILL LOWER SECTION	* PONDEROSA/SUGAR PINE
9	CAWN 295	SILL STOP BLOCK	* PONDEROSA/SUGAR PINE
10	EAWN 200	STILE AND RAIL	* PONDEROSA/SUGAR PINE
11	ALWD 375	GLAZING BEAD	* PONDEROSA/SUGAR PINE
12	300-0025	STATIONARY BLOCK	* PONDEROSA/SUGAR PINE
13	CAWN 440	JAMB CLAD	6063-T6 ALUMINUM
14	EAWN 400	RAIL/STILE CLAD	6063-T5 ALUMINUM
15	EAWN 405	OPTIONAL RAIL CLAD	6063-T5 ALUMINUM
16	PA 115	MULLION CLIP	6060-T5 ALUMINUM
17	–	NAIL FIN	6063-T6 ALUMINUM
18	CAWN 620	JAMB CORNER KEY	NYLON 66 MATERIAL
19	216273	1-PIECE GLAZING BEAD	* PONDEROSA/SUGAR PINE
20	–	I.G. GLAZING BEAD	* PONDEROSA/SUGAR PINE
		HARDWARE	
26	–	OPERATOR	AS REQUIRED
27	CAWN690	SCISSOR HINGE	ONE @ EACH SIDE
28	EAWN 155	SINGLE POINT LOCK SYSTEM	TRUTH
29	093839	2 PIECE SNUBBER	0.320" X 0.531" X 1.844" LONG STAMPED STEEL
		SEALS AND SEALANTS	
35	020546	FRAME WEATHERSTRIP	GREY SANTOPRENE FOAM
36	EAWN 625	SASH WEATHERSTRIP	VINYL
		FASTENERS	
40	092748	1 1/2" RING SHANK NAIL	4" FROM CORNERS & 6" TO 12" O.C.
41	011824	1 3/4" T-NAIL	1" FROM CORNERS & 6" TO 10" O.C. @ SILL COVER & SILL LOWER SECTION AND 1 PER SILL BLOCK
43	013801	#8 X 1 1/4" PH S.S. SMS	2 PER LOCK STRIKE
44	010226	AUTO WIRE NAIL	2" FROM CORNERS & 6" TO 8" O.C.
45	024617	2 1/2" X 1" CROWN STAPLE	2" FROM CORNERS & 10" O.C.
46	019892	#18 x 1/2" GSN STAPLE	2" FROM CORNERS & 7" TO 10" O.C.
47	–	#6 X 5/8" PH SCREW	2" FROM CORNERS & 9" O.C.
48	–	NO. 8 X 1 1/4" S.S. SMS	2 PER SNUBBER INTO SASH
49	–	NO. 7 X 1/2" S.S. SMS	2 PER SNUBBER INTO FRAME

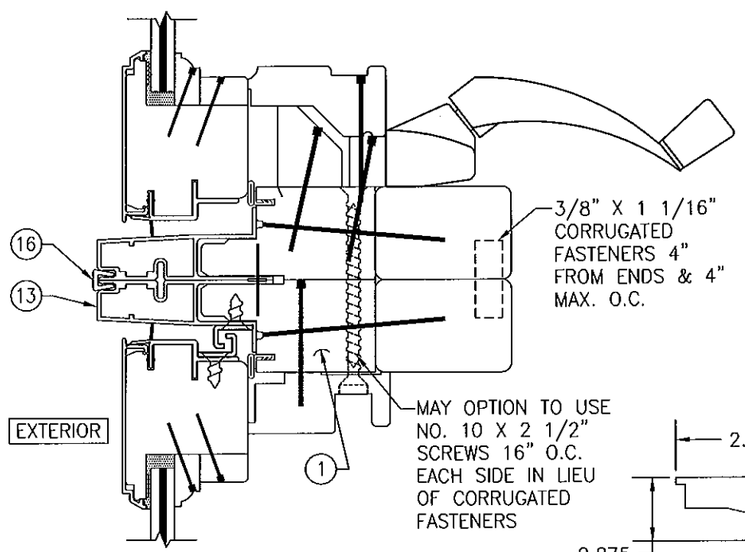

SECTION F/5
SCALE: 1/2 FULL

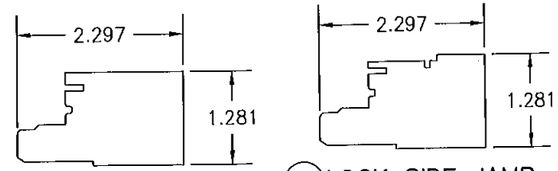

1 HEAD, SILL & HINGE JAMB

2 LOCK SIDE JAMB

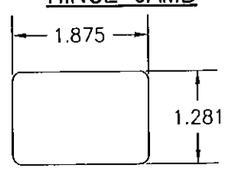

3 JAMB EXTENDER

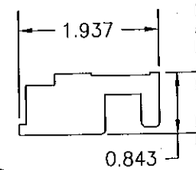

4 HEAD JAMB STOP

PRODUCT REVISED
as complying with the Florida Building Code
Acceptance No 11-0517.04
Expiration Date JUNE 24, 2016
By Manuel Perez
Miami-Dade Product Control

NOTE: WOOD USED IN TESTING WAS PONDEROSA PINE. OTHER WOOD SPECIES APPLICABLE FOR USE WITH THIS PRODUCT ARE THOSE WITH A SPECIFIC GRAVITY OF 0.43 AND MODULUS OF ELASTICITY OF 1,200,000 PSI OR GREATER. ALL WOOD IS MINIMUM GRADE 2 MILLED BY HURD WINDOWS & DOORS TO SELECT.

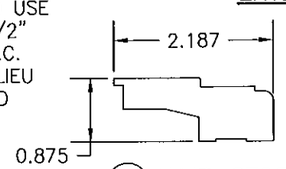

6 JAMB STOP

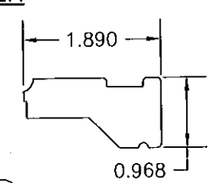

7 SILL COVER

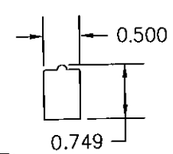

8 SILL LOWER SECTION

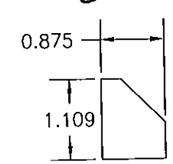

9 SILL STOP BLOCK

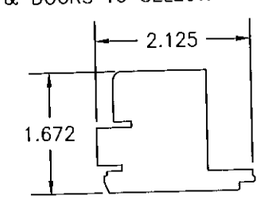

10 STILE AND RAIL

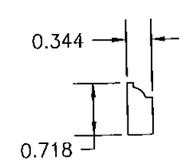

11 GLAZING BEAD

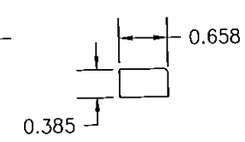

12 STATIONARY BLOCK

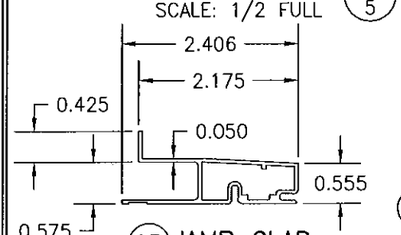

13 JAMB CLAD

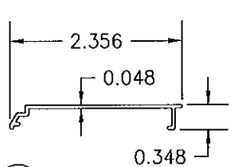

14 RAIL/STILE CLAD

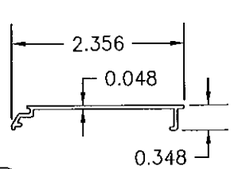

15 OPTIONAL RAIL CLAD

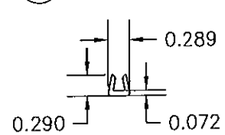

16 MULLION CLIP

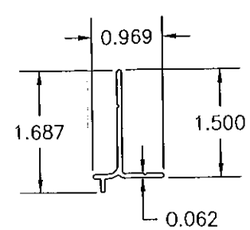

17 NAIL FIN

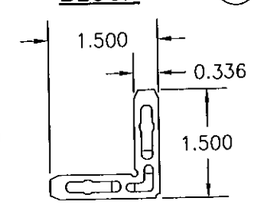

18 JAMB CORNER KEY

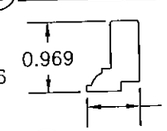

19 1-PIECE GLAZING BEAD

20 I.G. GLAZING BEAD

NO.	REVISION DESCRIPTION	BY	DATE

DRAWN BY: S.T.R.
CHECKED BY: W.W.S.
PLOT: 1=2
DATE: 7/21/05

DRAWING TITLE: FEEL SAFE ALUMINUM CLAD WOOD IMPACT AWNING WINDOW

MANUFACTURER: HWD ACQUISITION, INC. dba HURD WINDOWS & DOORS
575 S. WHELEN AVE.
MEDFORD, WI 54451
800-433-4873

CONSULTANTS: W. W. SCHAEFER ENGINEERING & CONSULTING, P.A.
8895 N. MILITARY TRAIL; SUITE C-204
PALM BEACH GARDENS, FL 33410
PHONE: 561-775-4902 FAX: 561-775-4903

CERTIFICATION: JUN 29 2011
WARREN W. SCHAEFER, P.E.
P.E. NO. 44135

WARREN W. SCHAEFER LICENSE No. 44135 STATE OF FLORIDA PROFESSIONAL ENGINEER

DRAWING NO. 1405
REV. B
SHEET NO. 5 OF 5