MIAMI-DADE COUNTY
BUILDING AND NEIGHBORHOOD COMPLIANCE DEPARTMENT (BNC)
BOARD AND CODE ADMINISTRATION DIVISION

MIAMI-DADE COUNTY
PRODUCT CONTROL SECTION
11805 SW 26 Street, Room 208
Miami, Florida 33175-2474
T (786) 315-2590 F (786) 315-2599
www.miamidade.gov/building

NOTICE OF ACCEPTANCE (NOA)

Hurricane Home Protection, Inc.
14932 S.W. 173rd Terrace
Miami, Florida 33187

SCOPE:
This NOA is being issued under the applicable rules and regulations governing the use of construction materials. The documentation submitted has been reviewed and accepted by Miami-Dade County BNC-Product Control Section to be used in Miami Dade County and other areas where allowed by the Authority Having Jurisdiction (AHJ).

This NOA shall not be valid after the expiration date stated below. The Miami-Dade County Product Control Section (In Miami Dade County) and/or the AHJ (in areas other than Miami Dade County) reserve the right to have this product or material tested for quality assurance purposes. If this product or material fails to perform in the accepted manner, the manufacturer will incur the expense of such testing and the AHJ may immediately revoke, modify, or suspend the use of such product or material within their jurisdiction. BNC reserves the right to revoke this acceptance, if it is determined by Miami-Dade County Product Control Section that this product or material fails to meet the requirements of the applicable building code.

This product is approved as described herein, and has been designed to comply with the High Velocity Hurricane Zone of the Florida Building Code.

DESCRIPTION: HT-100 Aluminnm Accordion Shutter

APPROVAL DOCUMENT: Drawing # HTS.09003q, titled "HT100 Accordion Shutter", sheets 1 through 7 of 7, prepared by Nu-Wind Engineering, dated April 07, 2011, signed and sealed by Christian Langley, P.E., bearing the Miami-Dade County Product Control Revision stamp with the Notice of Acceptance number and the expiration date by the Miami-Dade County Product Control Section.

MISSILE IMPACT RATING: Large and Small Missile Impact Resistant

LABELING: Each unit shall bear a permanent label with the manufacturer's name or logo, city, state, and the following statement: "Miami-Dade County Product Control Approved", and NOA number, per TAS-201, TAS-202, and TAS-203, unless otherwise noted herein.

RENEWAL of this NOA shall be considered after a renewal application has been filed and there has been no change in the applicable building code negatively affecting the performance of this product.

TERMINATION of this NOA will occur after the expiration date or if there has been a revision or change in the materials, use, and/or manufacture of the product or process. Misuse of this NOA as an endorsement of any product, for sales, advertising or any other purposes shall automatically terminate this NOA. Failure to comply with any section of this NOA shall be cause for termination and removal of NOA.

ADVERTISEMENT: The NOA number preceded by the words Miami-Dade County, Florida, and followed by the expiration date may be displayed in advertising literature. If any portion of the NOA is displayed, then it shall be done in its entirety.

INSPECTION: A copy of this entire NOA shall be provided to the user by the manufacturer or its distributors and shall be available for inspection at the job site at the request of the Building Official.

This NOA **revises and renews NOA # 06-0531.04** and consists of this page 1, evidence submitted pages E-1 & E-2 as well as approval document mentioned above.

The submitted documentation was reviewed by **Helmy A. Makar, P.E., M.S.**

MIAMI-DADE COUNTY APPROVED

Helmy A. Makar
07/07/2011

NOA No. 11-0518.08
Expiration Date: 07/20/2016
Approval Date: 07/07/2011

NOTICE OF ACCEPTANCE: EVIDENCE SUBMITTED

1. EVIDENCE SUBMITTED UNDER PREVIOUS APPROVAL #06-0531.04

A. DRAWINGS

1. *Drawing No. **06-400**, titled "HT-100 Aluminum Accordion Shutters", sheets 1 through 7 of 7, prepared by Thornton-Tomasetti Group., dated September 14, 2005, last revision #0 dated September 14, 2005, signed and sealed by V.J. Knezevich, P.E.*

B. TESTS

1. *See Association's generic approval under 05-0321.*

C. CALCULATIONS

1. *See Association's generic approval under 05-0321.*

D. QUALITY ASSURANCE

1. *By Miami-Dade County Building Code Compliance Office.*

E. MATERIAL CERTIFICATIONS

1. *See Association's generic approval under 05-0321.*

F. STATEMENTS

1. *Release letter issued by the Hi-Tech Shutter Group, Inc., dated May 25, 2006, certifying this product to meet the criteria of product tested and approved, and allowing Hurricane Home Protection, Inc. to use the test results approved under Miami-Dade County Approval No.05-0321, signed by Mr. Frank Cornelius.*
2. *Acknowledgment letter by Hurricane Home Protection, Inc. dated May 29, 2006, signed by Mr. Domingo Cespedes.*
3. *Letter by Thornton-Tomasetti Group, dated May 25, 2006, certifying that the drawing (No. 06-400) prepared for Hurricane Home Protection, Inc., signed and sealed by Mr. V. J. Knezevich, P.E., is engineering wise identical to Hi-Tech's generic drawing (No. 05-509).*
4. *Acceptance Letter issued to Mr. Domingo Cespedes on July 15, 2006, and returned signed by Domingo Cespedes on July 20, 2006, indicating to please issue the proposed Notice of Acceptance as submitted and reviwed.*

2. NEW EVIDENCE SUBMITTED

A. DRAWINGS

1. *Drawing # HTS.09003q, titled "HT100 Accordion Shutter", sheets 1 through 7 of 7, prepared by Nu-Wind Engineering, dated April 07, 2011, signed and sealed by Christian Langley, P.E.*

Helmy A. Makar, P.E., M.S.
BNC, Product Control Unit Supervisor
NOA No. 11-0518.08
Expiration Date: 07/20/2016
Approval Date: 07/07/2011

NOTICE OF ACCEPTANCE: EVIDENCE SUBMITTED

B. TESTS

1. *See Association's generic approval under 09-1510.*

C. CALCULATIONS

1. *See Association's generic approval under 09-1510.*

D. QUALITY ASSURANCE

1. *By Miami-Dade County Building and Neighborhood Compliance Department.*

E. MATERIAL CERTIFICATIONS

1. *See Association's generic approval under 09-1510.*

F. STATEMENTS

1. *Release letter issued by the Hi-Tech Shutter Group, Inc., dated April 25, 2011, certifying this product to meet the criteria of product tested and approved, and allowing Hurricane Home Protection, Inc. to use the test results approved under Miami-Dade County Approval No. 09-1510, signed by Yovanna Diaz.*
2. *Acknowledgment letter by hurricane Home Protection, Inc., dated May 02, 2011, signed by Domingo Cespedes.*
3. *Letter by Nu-wind Engineering, dated April 07, 2011, certifying that the drawing (No. HTS.09003q) prepared for Hurricane Home Protection, Inc., signed and sealed by Christian Langley, P.E., is engineering wise identical to Hi-Tech Shutter Group, Inc. Association generic drawing (No. HTS.09003).*

Helmy A. Makar, P.E., M.S.
BNC, Product Control Unit Supervisor
NOA No. 11-0518.08
Expiration Date: 07/20/2016
Approval Date: 07/07/2011

HT-100 ACCORDION SHUTTER

GENERAL NOTES

1. THE SYSTEM DEPICTED HEREIN HAS BEEN TESTED & EVALUATED IN ACCORDANCE WITH THE 2007 FLORIDA BUILDING CODE WITH 2009 SUPPLEMENTS, FOR USE WITHIN AND OUTSIDE THE HIGH VELOCITY HURRICANE ZONE (HVHZ).
2. THIS SYSTEM HAS BEEN EVALUATED WITHOUT A ONE-THIRD INCREASE IN ALLOWABLE STRESS.
3. POSITIVE AND NEGATIVE DESIGN PRESSURES CALCULATED FOR USE WITH THIS SYSTEM SHALL BE DETERMINED BY OTHERS ON A SITE-SPECIFIC BASIS IN ACCORDANCE WITH THE GOVERNING CODE.
4. THE SYSTEM DETAILED HEREIN IS GENERIC AND DOES NOT PROVIDE INFORMATION FOR A SPECIFIC SITE. FOR SITE CONDITIONS DIFFERENT FROM THE CONDITIONS DETAILED HEREIN, A LICENSED PROFESSIONAL ENGINEER OR REGISTERED ARCHITECT SHALL PREPARE SITE-SPECIFIC DOCUMENTS FOR USE IN CONJUNCTION WITH THIS APPROVAL AND APPLY FOR MIAMI-DADE COUNTY PRODUCT CONTROL DIVISION ONE-TIME APPROVAL.
5. CONTRACTOR, ARCHITECT, ENGINEER OF RECORD, OR BUILDING OFFICIAL SHALL VERIFY THE ADEQUACY OF THE EXISTING STRUCTURE TO WITHSTAND SUPERIMPOSED LOADS.
6. ALL ALUMINUM EXTRUSIONS SHALL BE 6063-T6 ALLOY & TEMPER, U.N.O.
7. ALL POLYCARBONATE COMPONENTS SHALL BE FABRICATED FROM 100% "*LEXAN*" POLYMER (BY *SABIC INNOVATIVE PLASTICS*) APPROVED FOR OUTDOOR USE WITHIN THE HVHZ.
8. SHUTTERS SHALL HAVE A MINIMUM OF ONE LOCK LOCATED WITHIN 18" OF MID-SPAN (MEASURED VERTICALLY) AT ANY HORIZONTAL LOCATION, AND SHALL BE ENGAGED WITH SHUTTER IN "CLOSED" POSITION TO PROVIDE HURRICANE PROTECTION.
9. EACH SHUTTER ASSEMBLY SHALL BE PERMANENTLY LABELED WITH A MINIMUM OF ONE LABEL PER UNIT CONTAINING ALL INFORMATION SPECIFIED IN THE ABOVE-NOTED BUILDING CODE, AS WELL AS THE FOLLOWING:
   HURRICANE HOME PROTECTION
   MIAMI, FLORIDA
   MIAMI-DADE PRODUCT CONTROL APPROVED
10. HEAD & SILL DETAILS MAY BE INTERCHANGED WHERE NOTED IN MOUNTING SECTIONS TO FIT FIELD CONDITIONS.
11. ALL BOLTS & WASHERS SHALL BE ZINC COATED STEEL, GALVANIZED STEEL, OR STAINLESS STEEL WITH A MINIMUM TENSILE YIELD STRENGTH OF 60 KSI. ALL 3/16"Ø POP RIVETS SHALL BE 5052-H32 ALUMINUM ALLOY OR STRONGER.
12. OPTIONAL: SHUTTER BLADES MAY BE STACKED (i.e. HELD IN OPEN POSITION) USING ANY COMBINATION OF THE FOLLOWING METHODS:
    - ALUMINUM "STACK LOCKING CLIP" (PART #26)
    - PLASTIC CLIP PLACED IN TRACK (HEAD &/OR SILL)
    - PULL-OUT CLEVIS PIN INSERTED INTO TRACK (HEAD &/OR SILL)
    - VELCRO STRAP AROUND STACKED BLADES (AT ANY HEIGHT)
13. ALL STEEL IN CONTACT WITH ALUMINUM SHALL BE PAINTED OR PLATED AS PRESCRIBED IN THE ABOVE-NOTED BUILDING CODE.

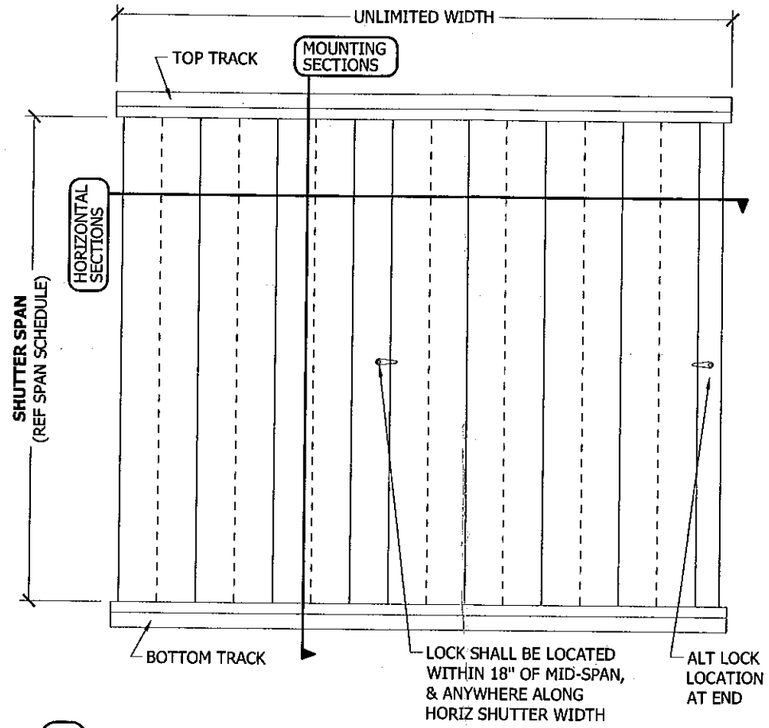

1/1 TYPICAL ELEVATION
SCALE: N.T.S. EXTER ELEV

PRODUCT REVISED
as complying with the Florida Building Code
Acceptance No 11-0518.08
Expiration Date 07/20/2016
By Helen A. Allen
Miami Dade Product Control

BLADE COMPONENTS

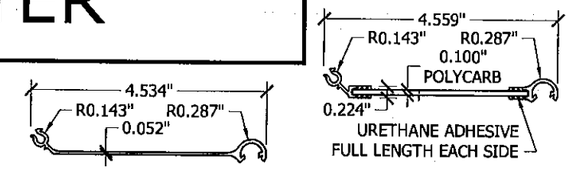

1 ALUMINUM BLADE SCALE: 1:3
2 POLYCARBONATE BLADE SCALE: 1:3
7 END SLAT SCALE: 1:3

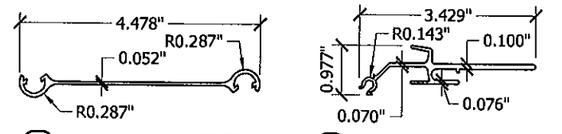

3 ALUM BLADE ADAPTER SCALE: 1:3
4 UNIMATE SCALE: 1:3
8 90° END SLAT SCALE: 1:3

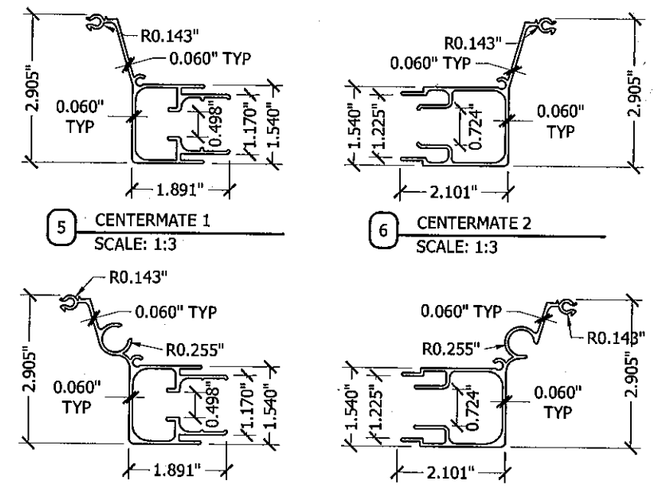

5 CENTERMATE 1 SCALE: 1:3
6 CENTERMATE 2 SCALE: 1:3
5a ALT CENTERMATE 1 SCALE: 1:3
6a ALT CENTERMATE 2 SCALE: 1:3

TRACK COMPONENTS

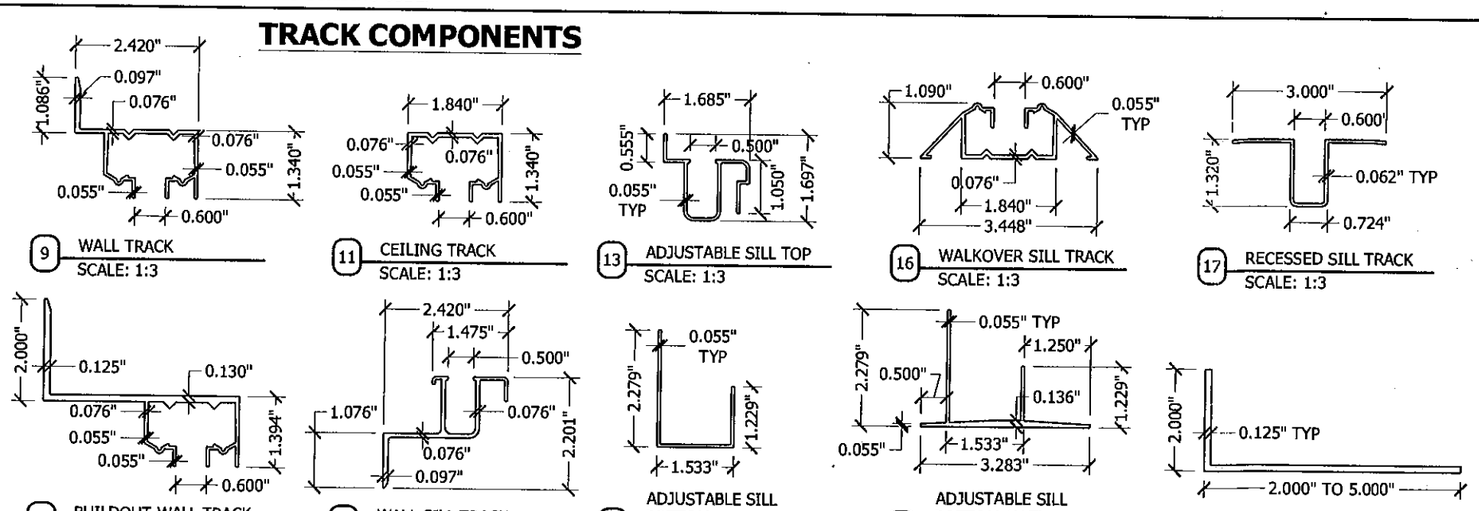

9 WALL TRACK SCALE: 1:3
11 CEILING TRACK SCALE: 1:3
13 ADJUSTABLE SILL TOP SCALE: 1:3
16 WALKOVER SILL TRACK SCALE: 1:3
17 RECESSED SILL TRACK SCALE: 1:3
10 BUILDOUT WALL TRACK SCALE: 1:3
12 WALL SILL TRACK SCALE: 1:3
14 ADJUSTABLE SILL BOTTOM SCALE: 1:3
15 ADJUSTABLE SILL BOTTOM (ALT) SCALE: 1:3
18 ANGLE SCALE: 1:3

ASSEMBLY COMPONENTS

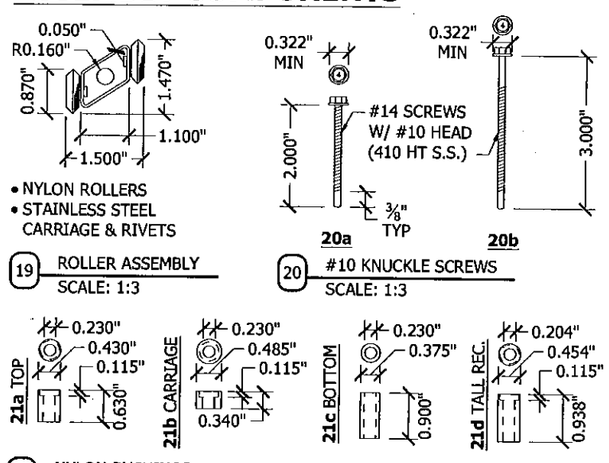

19 ROLLER ASSEMBLY SCALE: 1:3
20 #10 KNUCKLE SCREWS SCALE: 1:3
21 NYLON BUSHINGS SCALE: 1:3

NU-WIND ENGINEERING
LARGEST PROVIDER OF STANDARD SOLUTIONS
www.nu-wind.com
Ofc: (954) 333-8965
1200 N FEDERAL HWY, #200
C.A. #28511

07 2011
CHRISTIAN LANGLEY, PE

REVISIONS			
DATE	DESCRIPTION	BY
4/7/11	INITIAL SUBMITTAL	CL
-	-	-
-	-	-
-	-	-

HT-100
ACCORDION SHUTTER
MIAMI-DADE BCCO
NOTICE OF ACCEPTANCE

PROJECT

HURRICANE HOME PROTECTION, Inc.
14932 SW 173rd TERR
MIAMI, FL 33187

DRAWING NUMBER:
HTS.09003q

SHEET 1 OF 7

clangley 4/7/2011 14:1
HTS.09003_01f Alum-Shutters (Q).dwg (Cr: 8/31/2010 16:15)

LOCKS & ACCESSORIES

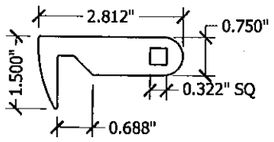

THICKNESS: 0.125"
(STAINLESS STEEL)

22 HOOK LOCKING ARM
SCALE: 1:3

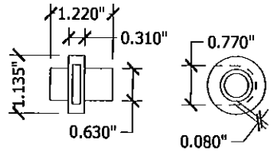

24 HOOK LOCKING ARM BUSHING
SCALE: 1:3 NYLON

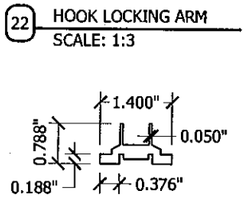

23 HOOK LOCK INSERT
SCALE: 1:3

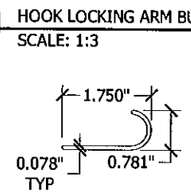

25 HANDLE (OPTIONAL)
SCALE: 1:3

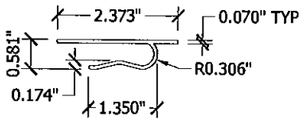

26 STACK LOCKING CLIP
SCALE: 1:3

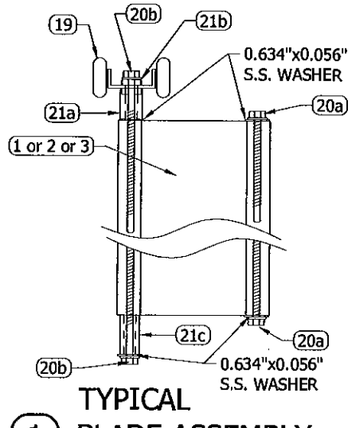

1/2 TYPICAL BLADE ASSEMBLY
SCALE: 1:3 SIDE ELEVATION

HORIZONTAL SECTIONS

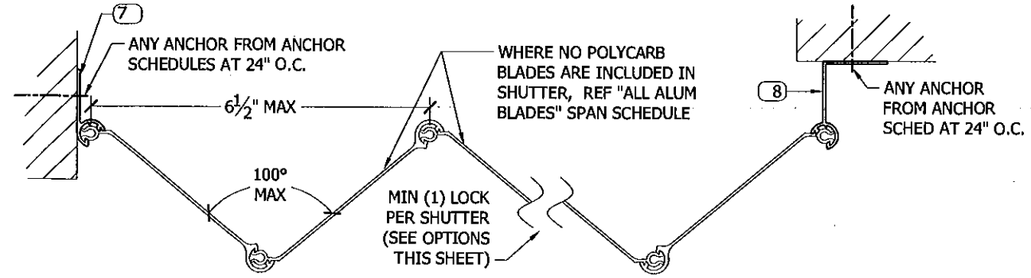

2/2 SHUTTER ASSEMBLY WITH ALUMINUM BLADES
SCALE: 1:3 HORIZ SECTION

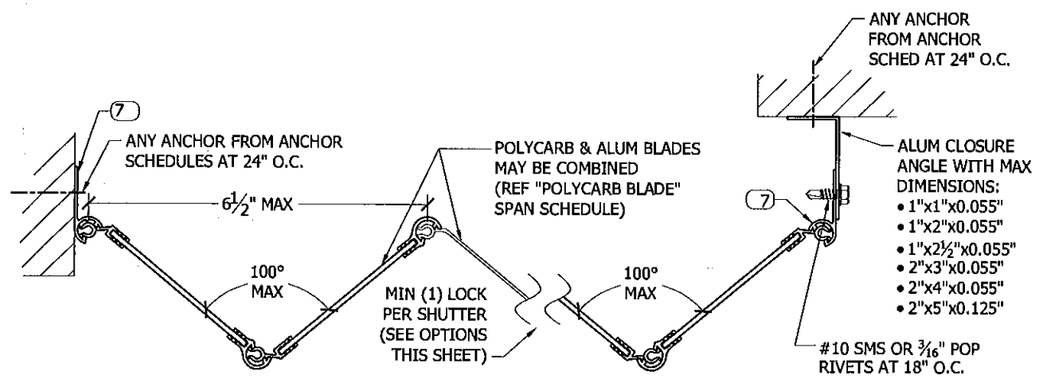

3/2 SHUTTER ASSEMBLY WITH POLYCARB BLADES
SCALE: 1:3 HORIZ SECTION

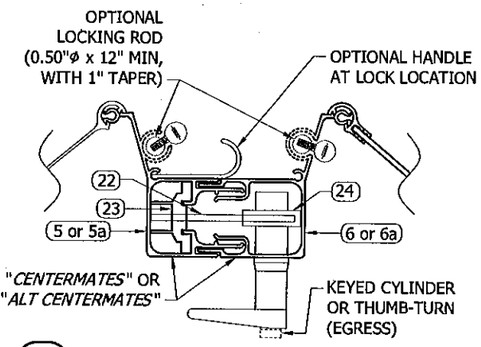

4/2 EXTERIOR L-HANDLE LOCK
SCALE: 1:3 HORIZ SECTION

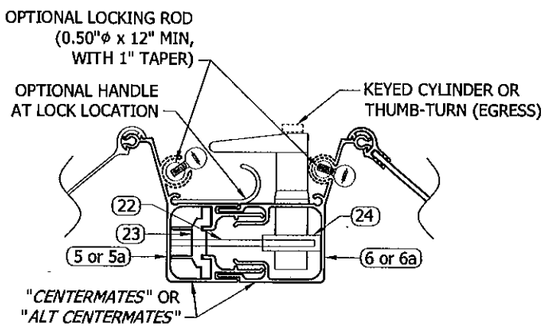

5/2 INTERIOR L-HANDLE LOCK
SCALE: 1:3 HORIZ SECTION

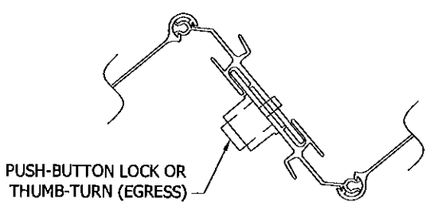

6/2 UNIMATE + PUSH-BUTTON
SCALE: 1:3 HORIZ SECTION

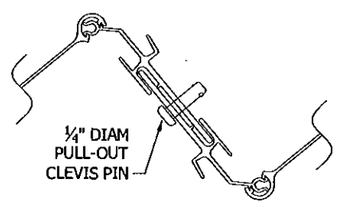

7/2 UNIMATE + CLEVIS PIN
SCALE: 1:3 HORIZ SECTION

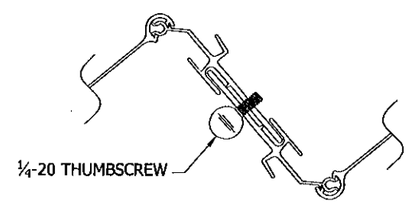

8/2 UNIMATE + THUMBSCREW
SCALE: 1:3 HORIZ SECTION

PRODUCT REVISED
as complying with the Florida
Building Code
Acceptance No 11-0518.08
Expiration Date 07/20/2016
By
Miami Dade Product Control

NU-WIND ENGINEERING
UNIQUE PROBLEMS ... STANDARD SOLUTIONS
1200 N FEDERAL HWY, #200
BOCA RATON, FL 33432
Ofc: (954) 333-8965
Fax: (954) 719-3700
www.nu-wind.com
C.A. #28511
CHRISTIAN LANDRY, PE
FL PE #67382 CA#28511

REVISIONS	DATE	DESCRIPTION	BY
-	4/7/11	INITIAL SUBMITTAL	GL
-	-	-	-
-	-	-	-
-	-	-	-

HT-100
ACCORDION SHUTTER
MIAMI-DADE BCCO
NOTICE OF ACCEPTANCE

HURRICANE HOME
PROTECTION, Inc.
14932 SW 173rd TERR
MIAMI, FL 33187

DRAWING NUMBER:
HTS.09003q

SHEET
2 OF 7

dangley 4/7/2011 14:19
HTS.09003_01f Alum-Shutters (Q).dwg (Cr: 8/31/2010 16:15)

SPECIAL INSTALLATION OPTIONS:

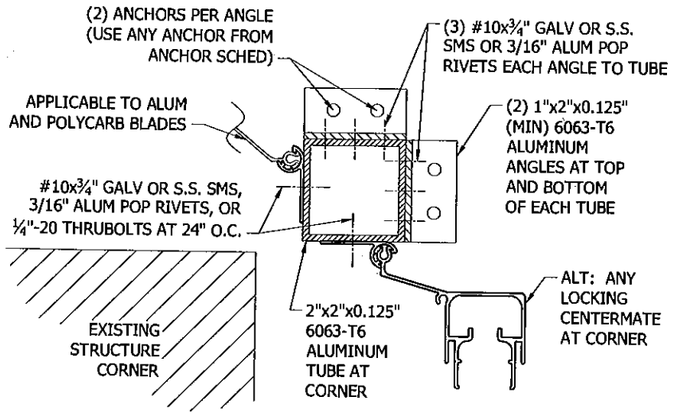

1/3 CORNER CLOSURE WITH POST
SCALE: 1:3 HORIZ SECTION

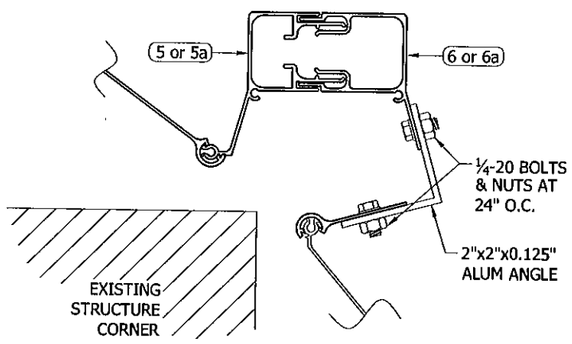

2/3 CORNER CLOSURE WITH CENTERMATES (NO POST)
SCALE: 1:3 HORIZ SECTION

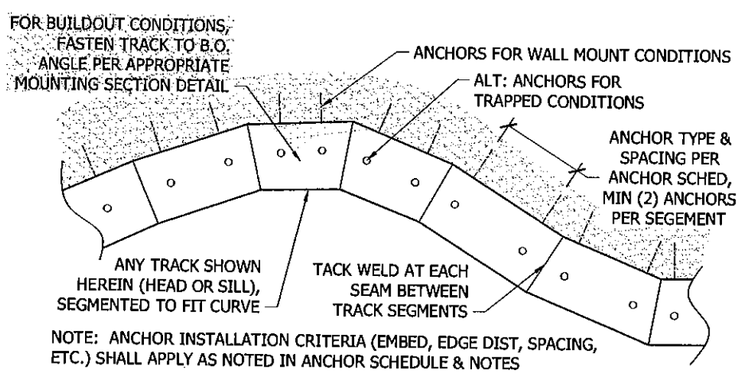

NOTE: ANCHOR INSTALLATION CRITERIA (EMBED, EDGE DIST, SPACING, ETC.) SHALL APPLY AS NOTED IN ANCHOR SCHEDULE & NOTES

4/3 SEGMENTED TRACK OPTION
SCALE: 1:3 PLAN VIEW

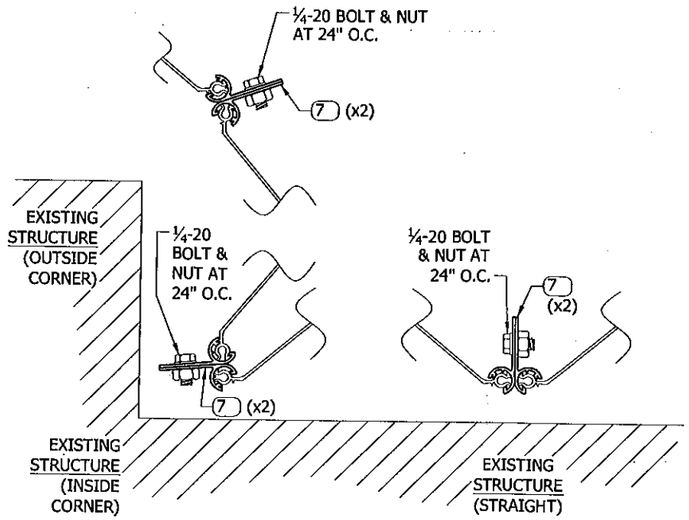

3/3 FLOATING STACK OPTIONS
SCALE: 1:3 HORIZ SECTION

NOTE: ANY FLOOR TRACK MAY BE USED - REFER TO MOUNTING SECTIONS FOR ANCHOR REQUIREMENTS

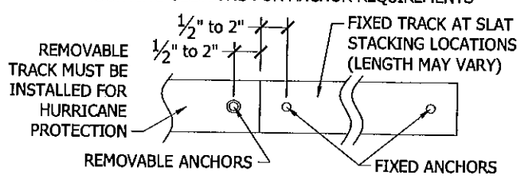

5/3 REMOVABLE FLOOR TRACK
SCALE: N.T.S. PLAN VIEW

NOTE: ANY TRACK MAY BE USED - REFER TO MOUNTING SECTIONS FOR ANCHOR REQUIREMENTS

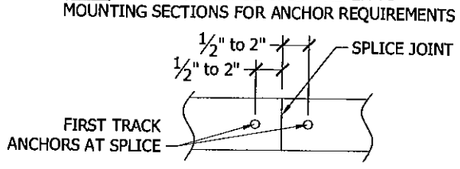

TYP HEAD & SILL

6/3 SPLICED TRACK
SCALE: N.T.S. PLAN VIEW

STUD & TRUSS/RAFTER MOUNTING CONDITIONS:

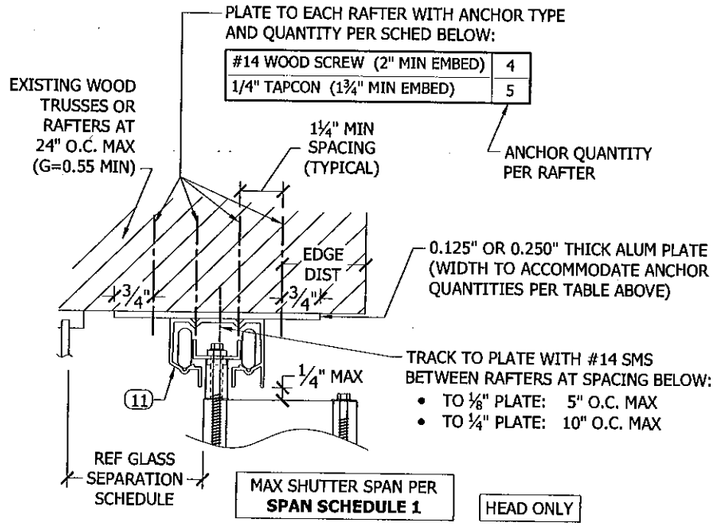

7/3 TRUSS-MOUNT CEILING TRACK
SCALE: 4" = 1'-0" MOUNTING SECTION

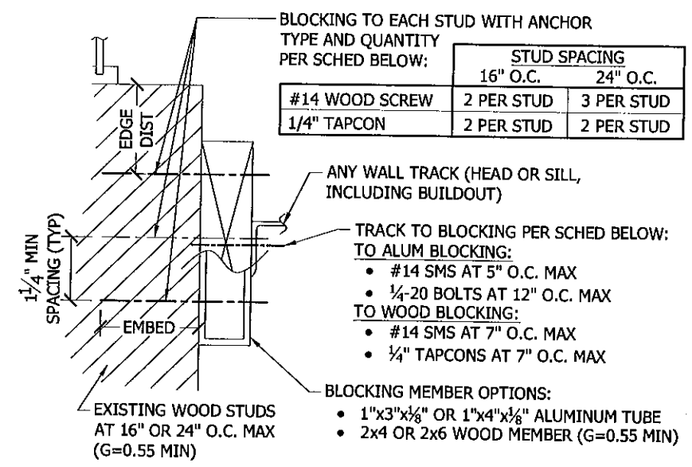

	STUD SPACING 16" O.C.	STUD SPACING 24" O.C.
#14 WOOD SCREW	2 PER STUD	3 PER STUD
1/4" TAPCON	2 PER STUD	2 PER STUD

REF WALL TRACK MOUNTING DETAILS FOR GOVERNING SPAN SCHEDULE

TYP HEAD & SILL (SILL SHOWN)

8/3 STUD WALL MOUNT
SCALE: 4" = 1'-0" MOUNTING SECTION

PRODUCT REVISED
as complying with the Florida Building Code
Acceptance No 11-0518.08
Expiration Date 07/20/2016
By [signature]
Miami Dade Product Control

NU-WIND ENGINEERING
STEPHEN P. KOLB
C.A. #28511
www.nu-wind.com
Ofc: (954) 333-8965
Fax: (954) 719-3707
1200 N FEDERAL HWY, #200
BOCA RATON, FL 33432
CHRISTIAN LANGLEY, PE
FL PE #67382 CA #28511

REV	DATE	DESCRIPTION	BY
-	4/7/11	INITIAL SUBMITTAL	CL

HT-100 ACCORDION SHUTTER
MIAMI-DADE BCCO NOTICE OF ACCEPTANCE

HURRICANE HOME PROTECTION, Inc.
14932 SW 173rd TERR
MIAMI, FL 33187

DRAWING NUMBER: HTS.09003q

SHEET 3 OF 7

HTS.09003_01f Alum-Shutters (Q).dwg (C= 8/31/2010 16:16)

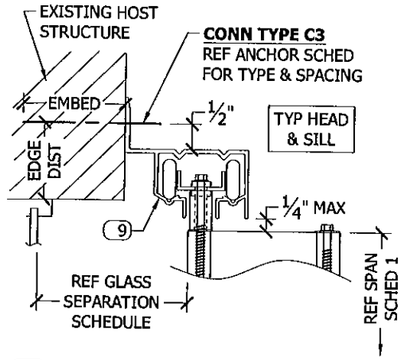

1/4 WALL TRACK
SCALE: 4" = 1'-0" MOUNTING SECTION

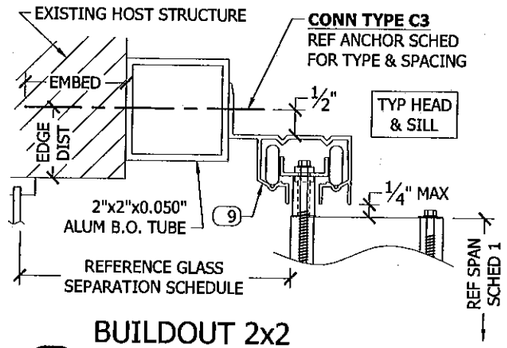

2/4 BUILDOUT 2x2 + WALL TRACK
SCALE: 4" = 1'-0" MOUNTING SECTION

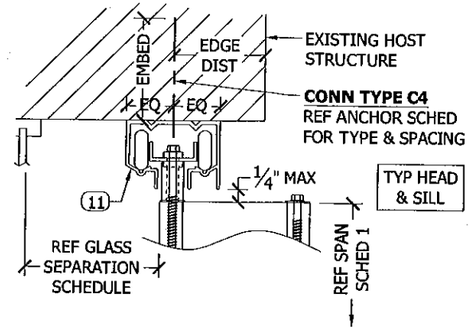

3/4 CEILING TRACK
SCALE: 4" = 1'-0" MOUNTING SECTION

SPAN SCHEDULE NOTES:

1. SCHEDULE ABOVE GIVES MAXIMUM ALLOWABLE DESIGN PRESSURES AT EACH RESPECTIVE SPAN.
2. THIS SCHEDULE IS APPLICABLE TO ONLY THOSE COMBINATIONS OF MOUNTING CONDITIONS SHOWN IN THIS SECTION.
3. WHERE THESE MOUNTING CONDITIONS ARE COMBINED WITH OTHERS SHOWN ELSEWHERE HEREIN, THE LESSER ALLOWABLE DESIGN PRESSURE AND SPAN SHALL GOVERN.

SPAN SCHEDULE 1

APPLICABLE TO ALL MOUNTING CONDITIONS ON THIS SHEET, AS WELL AS DETAILS 7/3 & 8/3

BLADE SPAN	ALLOWABLE DESIGN WIND PRESSURE	
	ALL ALUM BLADES	POLYCARB BLADES
4'-0"	±170.0 PSF	+132.8 / -144.0 PSF
4'-6"	±162.7 PSF	+118.0 / -128.0 PSF
5'-0"	±146.4 PSF	+106.2 / -115.2 PSF
5'-6"	±133.1 PSF	+ 96.6 / -104.7 PSF
6'-0"	±122.0 PSF	+ 88.5 / - 96.0 PSF
6'-4"	±115.6 PSF	+ 83.9 / - 90.9 PSF
6'-8"	±109.8 PSF	+ 79.7 / - 86.4 PSF
7'-0"	±104.6 PSF	+ 75.9 / - 82.3 PSF
7'-4"	± 99.8 PSF	+ 72.4 / - 78.5 PSF
7'-8"	± 95.5 PSF	+ 69.3 / - 75.1 PSF
8'-0"	± 91.4 PSF	+ 66.4 / - 72.0 PSF
8'-4"	± 87.8 PSF	-----
8'-8"	± 84.5 PSF	-----
9'-0"	± 81.3 PSF	-----
9'-4"	± 78.4 PSF	-----
9'-8"	± 75.7 PSF	-----
10'-0"	± 73.2 PSF	-----
10'-4"	± 70.8 PSF	-----
10'-8"	± 68.6 PSF	-----
11'-0"	± 66.5 PSF	-----
11'-4"	± 64.0 PSF	-----
11'-8"	± 61.3 PSF	-----
12'-0"	± 54.8 PSF	-----
12'-4"	± 49.1 PSF	-----
12'-8"	± 44.1 PSF	-----
13'-0"	± 39.8 PSF	-----
13'-4"	± 35.9 PSF	-----
13'-8"	± 32.5 PSF	-----
14'-0"	± 29.6 PSF	-----
14'-4"	± 26.9 PSF	-----
14'-8"	± 24.5 PSF	-----
15'-0"	± 22.4 PSF	-----

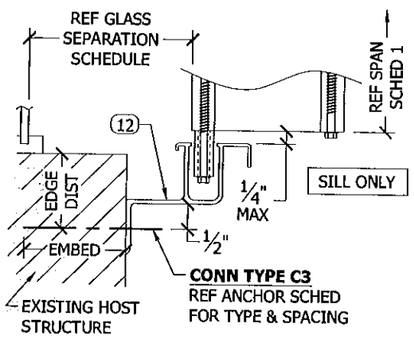

4/4 WALL SILL TRACK
SCALE: 4" = 1'-0" MOUNTING SECTION

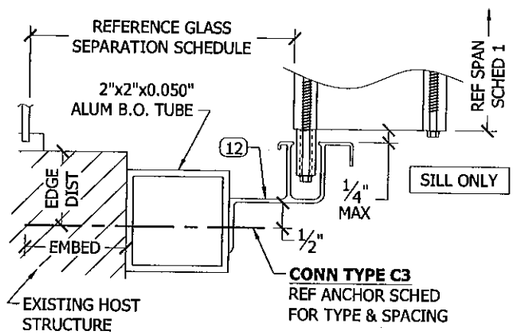

5/4 BUILDOUT 2x2 + WALL SILL TRACK
SCALE: 4" = 1'-0" MOUNTING SECTION

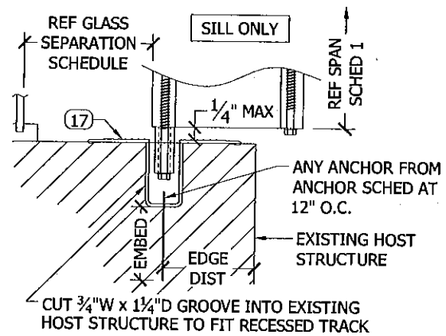

6/4 RECESSED SILL TRACK
SCALE: 4" = 1'-0" MOUNTING SECTION

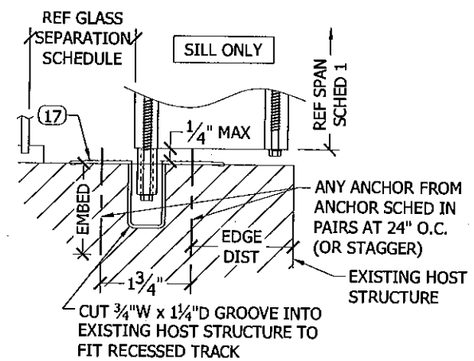

7/4 RECESSED SILL TRACK (ALT)
SCALE: 4" = 1'-0" MOUNTING SECTION

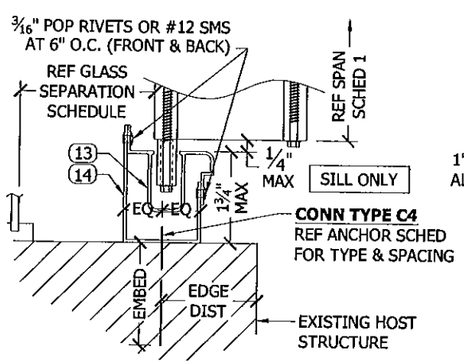

8/4 ADJUSTABLE SILL TRACK (STANDARD ANCHORAGE)
SCALE: 4" = 1'-0" MOUNTING SECTION

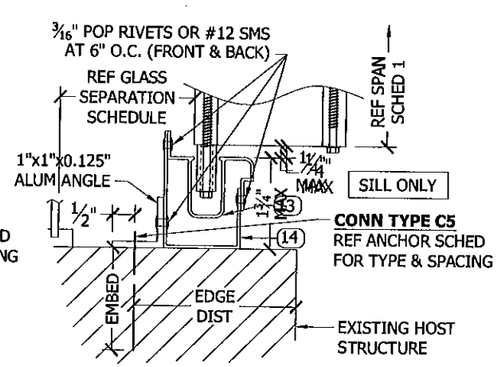

9/4 ADJUSTABLE SILL TRACK (1x1 ANGLE ANCHORAGE)
SCALE: 4" = 1'-0" MOUNTING SECTION

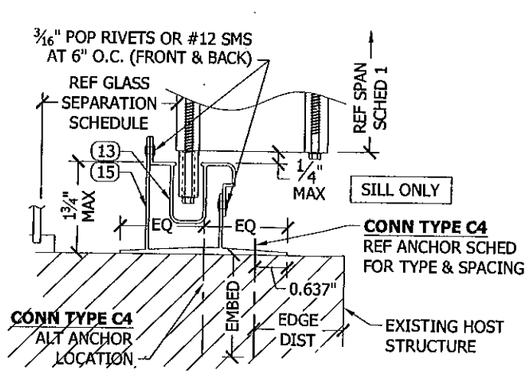

10/4 ADJUSTABLE SILL TRACK (FLANGED BOTTOM)
SCALE: 4" = 1'-0" MOUNTING SECTION

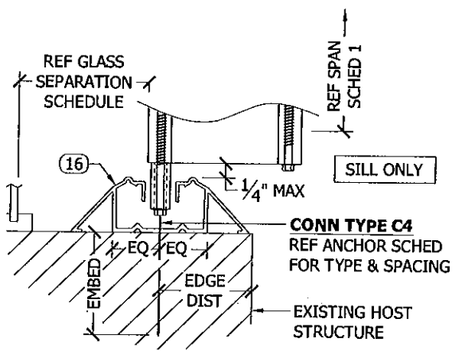

11/4 WALKOVER SILL TRACK
SCALE: 4" = 1'-0" MOUNTING SECTION

PRODUCT REVISED
as complying with the Florida Building Code
Acceptance No 11-0518.08
Expiration Date 07/20/2016
By
Miami Dade Product Control

NU-WIND ENGINEERING
UNIQUE PROBLEMS ... STANDARD SOLUTIONS
C.A. #26511
1200 N FEDERAL HWY, #200
BOCA RATON, FL 33432
Ofc: (954) 333-8965
Fax: (954) 719-3707
www.nu-wind.com
CHRISTIAN LANGLEY, PE
FL PE #67382 CA #28511

REV	DATE	DESCRIPTION	BY
0	4/7/11	INITIAL SUBMITTAL	CL

HT-100 ACCORDION SHUTTER
MIAMI-DADE BCCO NOTICE OF ACCEPTANCE

HURRICANE HOME PROTECTION, Inc.
14932 SW 173rd TERR
MIAMI, FL 33187

DRAWING NUMBER: HTS.09003q

SHEET 4 OF 7

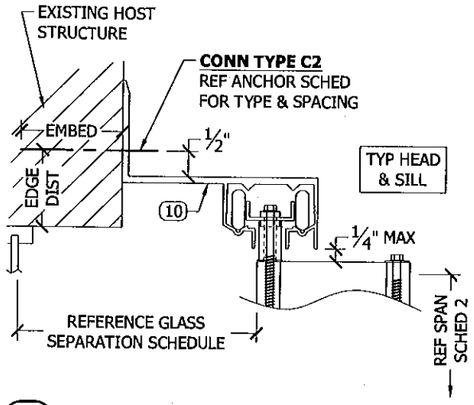

1/5 BUILDOUT WALL TRACK

SCALE: 4" = 1'-0" MOUNTING SECTION

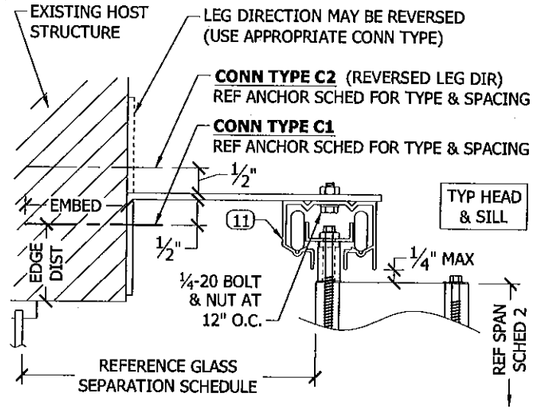

2/5 BUILDOUT 2x5 (STANDARD) + CEILING TRACK

SCALE: 4" = 1'-0" MOUNTING SECTION

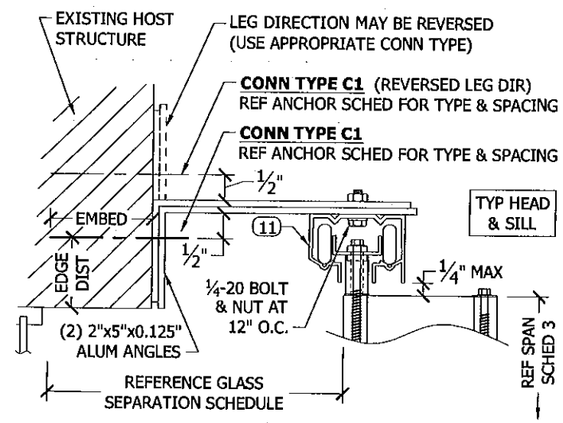

4/5 BUILDOUT 2x5 (2x STANDARD) + CEILING TRACK

SCALE: 4" = 1'-0" MOUNTING SECTION

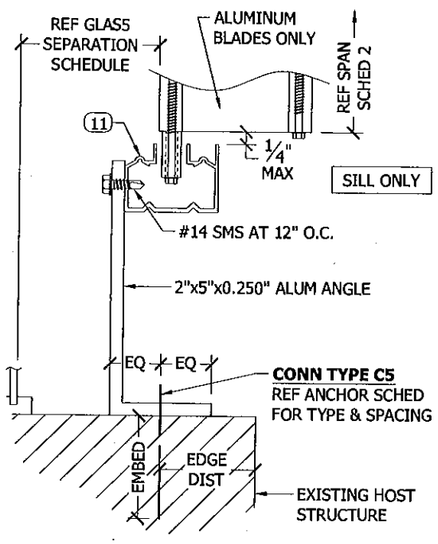

3/5 BUILDUP 2x5 (HEAVY) + CEILING TRACK

SCALE: 4" = 1'-0" MOUNTING SECTION

SPAN SCHEDULE 2

APPLICABLE TO ALL MOUNTING CONDITIONS IN THIS SECTION

BLADE SPAN	ALLOWABLE DESIGN WIND PRESSURE	
	ALL ALUM BLADES	POLYCARB BLADES
4'-0"	±144.0 PSF	+132.8 / -144.0 PSF
4'-6"	±128.0 PSF	+118.0 / -128.0 PSF
5'-0"	±115.2 PSF	+106.2 / -115.2 PSF
5'-6"	±104.7 PSF	+ 96.6 / -104.7 PSF
6'-0"	± 96.0 PSF	+ 88.5 / - 96.0 PSF
6'-4"	± 90.9 PSF	+ 83.9 / - 90.9 PSF
6'-8"	± 86.4 PSF	+ 79.7 / - 86.4 PSF
7'-0"	± 82.3 PSF	+ 75.9 / - 82.3 PSF
7'-4"	± 78.5 PSF	+ 72.4 / - 78.5 PSF
7'-8"	± 75.1 PSF	+ 69.3 / - 75.1 PSF
8'-0"	± 72.0 PSF	+ 66.4 / - 72.0 PSF
8'-4"	± 66.4 PSF	-----
8'-8"	± 61.3 PSF	-----
9'-0"	± 56.9 PSF	-----
9'-4"	± 52.9 PSF	-----
9'-8"	± 49.3 PSF	-----
10'-0"	± 46.1 PSF	-----
10'-4"	± 43.2 PSF	-----
10'-8"	± 40.S PSF	-----
11'-0"	± 38.1 PSF	-----
11'-4"	± 35.9 PSF	-----
11'-8"	± 33.9 PSF	-----
12'-0"	± 32.0 PSF	-----
12'-4"	± 30.3 PSF	-----
12'-8"	± 28.7 PSF	-----
13'-0"	± 27.3 PSF	-----
13'-4"	± 25.9 PSF	-----
13'-8"	± 24.7 PSF	-----
14'-0"	± 23.5 PSF	-----
14'-4"	± 22.4 PSF	-----
14'-8"	± 21.4 PSF	-----
15'-0"	± 20.5 PSF	-----

SPAN SCHEDULE NOTES:

1. SCHEDULE ABOVE GIVES MAXIMUM ALLOWABLE DESIGN PRESSURES AT EACH RESPECTIVE SPAN.
2. THIS SCHEDULE IS APPLICABLE TO ONLY THOSE COMBINATIONS OF MOUNTING CONDITIONS SHOWN IN THIS SECTION.
3. WHERE THESE MOUNTING CONDITIONS ARE COMBINED WITH OTHERS SHOWN ELSEWHERE HEREIN, THE LESSER ALLOWABLE DESIGN PRESSURE AND SPAN SHALL GOVERN.

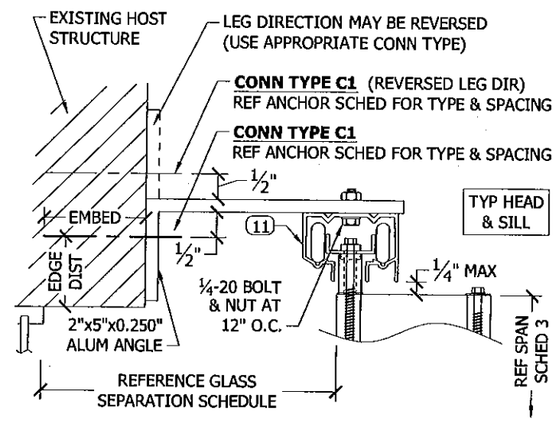

5/5 BUILDOUT 2x5 (HEAVY) + CEILING TRACK

SCALE: 4" = 1'-0" MOUNTING SECTION

PRODUCT REVISED
as complying with the Florida Building Code
Acceptance No 11-0518.08
Expiration Date 07/20/2016
By [signature]
Miami Dade Product Control

SPAN SCHEDULE NOTES:

1. SCHEDULE ABOVE GIVES MAXIMUM ALLOWABLE DESIGN PRESSURES AT EACH RESPECTIVE SPAN.
2. THIS SCHEDULE IS APPLICABLE TO ONLY THOSE COMBINATIONS OF MOUNTING CONDITIONS SHOWN IN THIS SECTION.
3. WHERE THESE MOUNTING CONDITIONS ARE COMBINED WITH OTHERS SHOWN ELSEWHERE HEREIN, THE LESSER ALLOWABLE DESIGN PRESSURE AND SPAN SHALL GOVERN.

SPAN SCHEDULE 3

APPLICABLE TO ALL MOUNTING CONDITIONS ON THIS SHEET

BLADE SPAN	ALLOWABLE DESIGN WIND PRESSURE	
	ALL ALUM BLADES	POLYCARB BLADES
4'-0"	±144.0 PSF	+132.8 / -144.0 PSF
4'-6"	±128.0 PSF	+118.0 / -128.0 PSF
5'-0"	±115.2 PSF	+106.2 / -115.2 PSF
5'-6"	±104.7 PSF	+ 96.6 / -104.7 PSF
6'-0"	± 96.0 PSF	+ 88.5 / - 96.0 PSF
6'-4"	± 90.9 PSF	+ 83.9 / - 90.9 PSF
6'-8"	± 86.4 PSF	+ 79.7 / - 86.4 PSF
7'-0"	± 82.3 PSF	+ 75.9 / - 82.3 PSF
7'-4"	± 78.5 PSF	+ 72.4 / - 78.5 PSF
7'-8"	± 75.1 PSF	+ 69.3 / - 75.1 PSF
8'-0"	± 72.0 PSF	+ 66.4 / - 72.0 PSF
8'-4"	± 68.1 PSF	-----
8'-8"	± 64.5 PSF	-----
9'-0"	± 61.1 PSF	-----
9'-4"	± 58.0 PSF	-----
9'-8"	± 55.2 PSF	-----
10'-0"	± 52.5 PSF	-----
10'-4"	± 49.9 PSF	-----
10'-8"	± 47.6 PSF	-----
11'-0"	± 45.4 PSF	-----
11'-4"	± 44.0 PSF	-----
11'-8"	± 42.8 PSF	-----
12'-0"	± 41.6 PSF	-----
12'-4"	± 40.5 PSF	-----
12'-8"	± 39.4 PSF	-----
13'-0"	± 38.4 PSF	-----
13'-4"	± 35.9 PSF	-----
13'-8"	± 32.5 PSF	-----
14'-0"	± 29.6 PSF	-----
14'-4"	± 26.9 PSF	-----
14'-8"	± 24.5 PSF	-----
15'-0"	± 22.4 PSF	-----

NU-WIND ENGINEERING
LARGE PROJECTS ... STANDARD SOLUTIONS
1200 N FEDERAL HWY, #200
BOCA RATON, FL 33432
Ofc: (954) 333-8965
Fax: (954) 719-3707
www.nu-wind.com
C.A. #28511

CHRISTIAN LANGLEY, PE
FL PE #67382 / FA #28511

REVISIONS	DATE	DESCRIPTION	BY
0	4/7/11	INITIAL SUBMITTAL	CL

HT-100 ACCORDION SHUTTER
MIAMI-DADE BCCO NOTICE OF ACCEPTANCE

PRODUCT MANUFACTURER

HURRICANE HOME PROTECTION, Inc.
14932 SW 173rd TERR
MIAMI, FL 33187

DRAWING NUMBER: HTS.09003q

SHEET 5 OF 7

HTS.09003_01f Alum-Shutters (Q).dwg (Cc: 8/31/2010 16:16)
clangley 4/7/2011 14:14

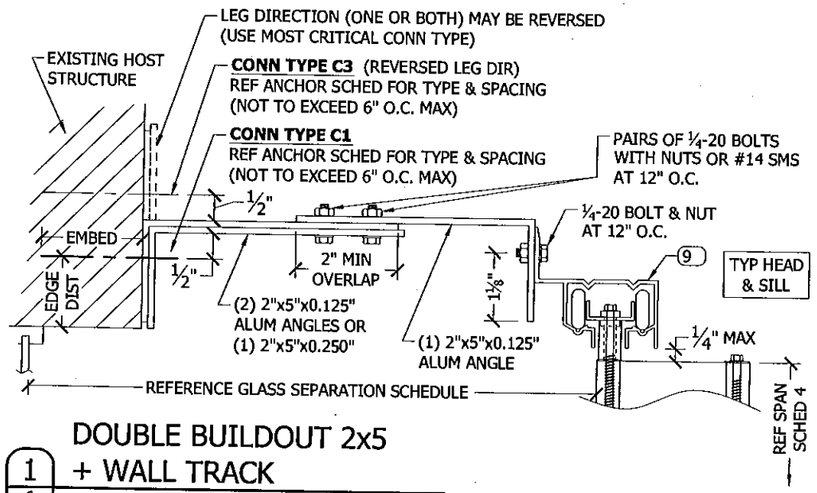

DOUBLE BUILDOUT 2x5 + WALL TRACK

1 / 6

SCALE: 4" = 1'-0" MOUNTING SECTION

SPAN SCHEDULE 4

APPLICABLE TO ALL MOUNTING CONDITIONS IN THIS SECTION

BLADE SPAN	ALLOWABLE DESIGN WIND PRESSURE	
	ALL ALUM BLADES	POLYCARB BLADES
4'-0"	±150.0 PSF	+132.8 / -144.0 PSF
4'-6"	±133.3 PSF	+118.0 / -128.0 PSF
5'-0"	±120.0 PSF	+106.2 / -115.2 PSF
5'-6"	±109.1 PSF	+ 96.6 / -104.7 PSF
6'-0"	±100.0 PSF	+ 88.5 / - 96.0 PSF
6'-4"	± 94.7 PSF	+ 83.9 / - 90.9 PSF
6'-8"	± 90.0 PSF	+ 79.7 / - 86.4 PSF
7'-0"	± 85.7 PSF	+ 75.9 / - 82.3 PSF
7'-4"	± 81.8 PSF	+ 72.4 / - 78.5 PSF
7'-8"	± 78.3 PSF	+ 69.3 / - 75.1 PSF
8'-0"	± 75.0 PSF	+ 66.4 / - 72.0 PSF
8'-4"	± 69.1 PSF	-----
8'-8"	± 63.9 PSF	-----
9'-0"	± 59.3 PSF	-----
9'-4"	± 55.1 PSF	-----
9'-8"	± 51.4 PSF	-----
10'-0"	± 48.0 PSF	-----
10'-4"	± 45.0 PSF	-----
10'-8"	± 42.2 PSF	-----
11'-0"	± 39.7 PSF	-----
11'-4"	± 37.4 PSF	-----
11'-8"	± 35.3 PSF	-----
12'-0"	± 33.3 PSF	-----
12'-4"	± 31.6 PSF	-----
12'-8"	± 29.9 PSF	-----
13'-0"	± 28.4 PSF	-----
13'-4"	± 27.0 PSF	-----
13'-8"	± 25.7 PSF	-----
14'-0"	± 24.5 PSF	-----
14'-4"	± 23.4 PSF	-----
14'-8"	± 22.3 PSF	-----
15'-0"	± 21.3 PSF	-----

SPAN SCHEDULE NOTES:

1. SCHEDULE GIVES MAXIMUM ALLOWABLE DESIGN PRESSURES AT EACH RESPECTIVE SPAN.
2. THIS SCHEDULE IS APPLICABLE TO ONLY THOSE COMBINATIONS OF MOUNTING CONDITIONS SHOWN IN THIS SECTION.
3. WHERE THESE MOUNTING CONDITIONS ARE COMBINED WITH OTHERS SHOWN ELSEWHERE HEREIN, THE LESSER ALLOWABLE DESIGN PRESSURE AND SPAN SHALL GOVERN.

SUPPORT BEAM AT SHUTTER END

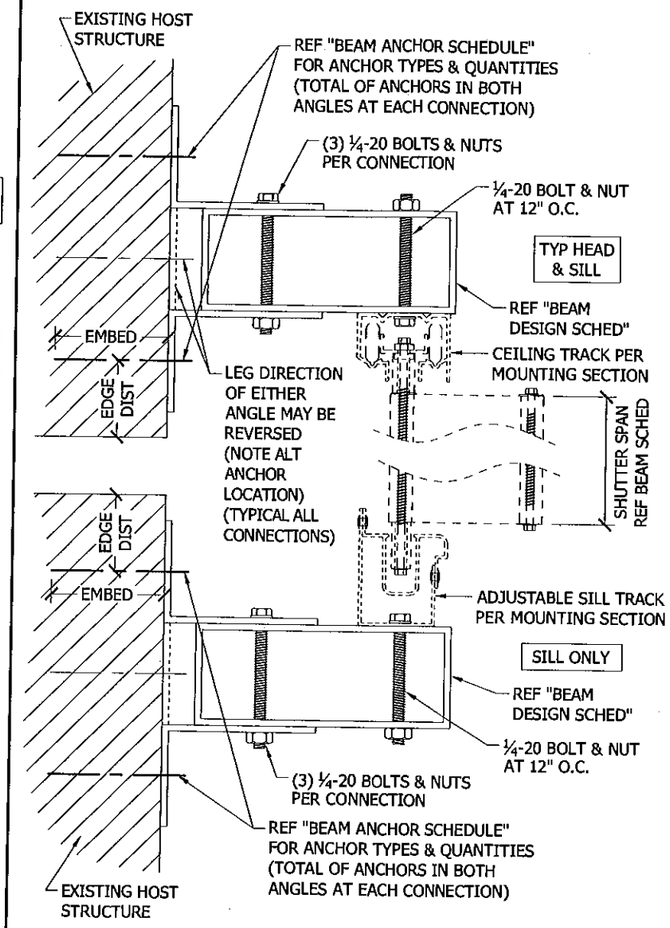

SUPPORT BEAM AT SHUTTER ENDS

2 / 6

SCALE: 4" = 1'-0" MOUNTING SECTION

BEAM ANCHOR SCHEDULE

CONN TYPE	1/4" ITW TAPCONS TO *CONCRETE* (3192 psi MIN) 1-3/4" MIN EMBED 2-1/2" MIN EDGE DIST 3" MIN SPACING	1/4-20 ALL POINTS SOLID-SET TO *CONCRETE* (3000 psi MIN) 7/8" MIN EMBED 3" MIN EDGE DIST 3" MIN SPACING	1/4" ITW TAPCONS TO *HOLLOW BLOCK* (1500 psi MIN) 1-3/4" MIN EMBED 2-1/2" MIN EDGE DIST 3" MIN SPACING	1/4-20 ALL POINTS SOLID-SET TO *HOLLOW BLOCK* (1800 psi MIN) 7/8" MIN EMBED 3" MIN EDGE DIST 3" MIN SPACING	#14 SCREWS TO *WOOD* (G=0.55 MIN) 2" MIN EMBED 3/4" MIN EDGE DIST 3" MIN SPACING
A	2 PER CONN	2 PER CONN	4 PER CONN	2 PER CONN	2 PER CONN
B	2 PER CONN	2 PER CONN	6 PER CONN	4 PER CONN	4 PER CONN
C	4 PER CONN	4 PER CONN	8 PER CONN	4 PER CONN	4 PER CONN
D	4 PER CONN	4 PER CONN	--- N/A ---	6 PER CONN	8 PER CONN

BEAM ANCHOR SCHEDULE NOTES:

1. SCHEDULE GIVES MINIMUM NUMBER OF ANCHORS REQUIRED PER CONNECTION (i.e. TOTAL QUANTITY AT EACH BEAM END).
2. ANCHORS SHALL BE DISTRIBUTED EVENLY BETWEEN THE (2) ANGLES AT EACH CONNECTION.
3. ANCHORS SHALL ALSO BE BALANCED ACROSS THE LENGTH OF EACH ANGLE, WITH ¾" MIN EDGE DISTANCE TO END OF ANGLE.

BEAM DESIGN SCHEDULE

SCHEDULE GIVES MAXIMUM ALLOWABLE DESIGN PRESSURE IN LB/FT² (PSF)

BEAM SPAN	SHUTTER SPAN	2"x3"x⅛" BEAM				2"x5"x⅛" BEAM				2"x8"x⅛" BEAM				2"x9"x⅛" BEAM			
		CONNECTION TYPE				CONNECTION TYPE				CONNECTION TYPE				CONNECTION TYPE			
		A	B	C	D	A	B	C	D	A	B	C	D	A	B	C	D
4 FT	5 FT	125	146	146	146	125	146	146	146	125	146	146	146	125	146	146	146
	6 FT	104	122	122	122	104	122	122	122	104	122	122	122	104	122	122	122
	8 FT	78	91	91	91	78	91	91	91	78	91	91	91	78	91	91	91
	10 FT	62	73	73	73	62	73	73	73	62	73	73	73	62	73	73	73
	12 FT	52	55	55	55	52	55	55	55	52	55	55	55	52	55	55	55
5 FT	5 FT	100	140	140	140	100	146	146	146	100	146	146	146	100	146	146	146
	6 FT	83	117	117	117	83	122	122	122	83	122	122	122	83	122	122	122
	8 FT	62	88	88	88	62	91	91	91	62	91	91	91	62	91	91	91
	10 FT	50	70	70	70	50	73	73	73	50	73	73	73	50	73	73	73
	12 FT	42	55	55	55	42	55	55	55	42	55	55	55	42	55	55	55
6 FT	5 FT	81	81	81	81	83	128	146	146	83	128	146	146	83	128	146	146
	6 FT	68	68	68	68	69	107	122	122	69	107	122	122	69	107	122	122
	8 FT	51	51	51	51	52	80	91	91	52	80	91	91	52	80	91	91
	10 FT	41	41	41	41	42	64	73	73	42	64	73	73	42	64	73	73
	12 FT	34	34	34	34	35	53	55	55	35	53	55	55	35	53	55	55
7 FT	5 FT	51	51	51	51	71	110	142	146	71	110	142	146	71	110	142	146
	6 FT	43	43	43	43	59	91	1- - -	122	59	91	1- - -	122	59	91	1- - -	122
	8 FT	32	32	32	32	45	69	89	91	45	69	89	91	45	69	89	91
	10 FT	26	26	26	26	36	55	71	73	36	55	71	73	36	55	71	73
	12 FT	21	21	21	21	30	46	55	55	30	46	55	55	30	46	55	55
8 FT	5 FT	34	34	34	34	62	96	122	122	62	96	125	146	62	96	125	146
	6 FT	29	29	29	29	52	80	101	101	52	80	104	122	52	80	104	122
	8 FT	21	21	21	21	39	60	76	76	39	60	78	91	39	60	78	91
	10 FT	---	---	---	---	31	48	61	61	31	48	62	73	31	48	62	73
	12 FT	---	---	---	---	26	40	51	51	26	40	52	55	26	40	52	55
9 FT	5 FT	24	24	24	24	55	85	85	85	55	85	111	146	55	85	111	146
	6 FT	20	20	20	20	46	71	71	71	46	71	92	122	46	71	92	122
	8 FT	---	---	---	---	35	53	53	53	35	53	69	91	35	53	69	91
	10 FT	---	---	---	---	28	43	43	43	28	43	55	73	28	43	55	73
	12 FT	---	---	---	---	23	36	36	36	23	36	46	55	23	36	46	55
10 FT	5 FT	---	---	---	---	50	62	62	62	50	77	100	146	50	77	100	146
	6 FT	---	---	---	---	42	52	52	52	42	64	83	122	42	64	83	122
	8 FT	---	---	---	---	31	39	39	39	31	48	62	91	31	48	62	91
	10 FT	---	---	---	---	25	31	31	31	25	38	50	73	25	38	50	73
	12 FT	---	---	---	---	21	26	26	26	21	32	42	55	21	32	42	55
12 FT	5 FT	---	---	---	---	36	36	36	36	42	64	83	122	42	64	83	138
	6 FT	---	---	---	---	30	30	30	30	35	53	69	102	35	53	69	115
	8 FT	---	---	---	---	23	23	23	23	26	40	52	76	26	40	52	86
	10 FT	---	---	---	---	---	---	---	---	21	32	42	61	21	32	42	69
	12 FT	---	---	---	---	---	---	---	---	---	27	35	51	---	27	35	55
14 FT	5 FT	---	---	---	---	23	23	23	23	36	55	71	82	36	55	71	101
	6 FT	---	---	---	---	---	---	---	---	30	46	59	68	30	46	59	84
	8 FT	---	---	---	---	---	---	---	---	22	34	45	51	22	34	45	63
	10 FT	---	---	---	---	---	---	---	---	---	27	36	41	---	27	36	51
	12 FT	---	---	---	---	---	---	---	---	---	23	30	34	---	23	30	42

REFER TO SPAN SCHEDULES FOR MAX ALLOWABLE SHUTTER SPANS AND PRESSURES

BEAM DESIGN SCHEDULE NOTES:

1. SCHEDULE GIVES MAXIMUM ALLOWABLE DESIGN PRESSURES AT EACH RESPECTIVE BEAM SPAN AND SHUTTER SPAN.
2. THIS SCHEDULE IS APPLICABLE TO ONLY THOSE COMBINATIONS OF MOUNTING CONDITIONS SHOWN IN THIS SECTION.
3. SHUTTER SPANS AND ALLOWABLE DESIGN PRESSURES SHALL BE LIMITED TO THOSE PROVIDED IN APPROPRIATE SPAN SCHEDULE(S).

PRODUCT REVISED
as complying with the Florida Building Code
Acceptance No 11-0518.08
Expiration Date 07/20/2016
By [signature]
Miami Dade Product Contr

NU-WIND ENGINEERING
UNIQUE PROBLEMS ...STANDARD SOLUTIONS
www.nu-wind.com
Ofc: (954) 333-8965
Fax: (954) 719-3707
1200 N FEDERAL HWY. #200
BOCA RATON, FL 33432
C.A. #28511

4/7/2011
CHRISTIAN LANGLEY, PE
FL PE #67382 CA #28511

REVISIONS	DATE	DESCRIPTION	BY
V	4/7/11	INITIAL SUBMITTAL	CL

HT-100
ACCORDION SHUTTER
MIAMI-DADE BCCO
NOTICE OF ACCEPTANCE
PRODUCT

HURRICANE HOME PROTECTION, Inc.
14932 SW 173rd TERR
MIAMI, FL 33187
MANUFACTURER

DRAWING NUMBER:
HTS.09003q

SHEET
6 OF 7

HTS.09003_01f Alum-Shutters (Q).dwg (Cr: 8/31/2010 16:16)
clangley 4/7/2011 14:2

dangley 4/7/2011 14:1

ANCHOR SCHEDULES:

HOST STRUCT. & STRENGTH		ANCHOR	LOAD (PSF)	SPANS UP TO 6'-0" CONN TYPE C1	C2	C3	C4	C5	SPANS UP TO 8'-8" CONN TYPE C1	C2	C3	C4	C5	SPANS UP TO 15'-0" CONN TYPE C1	C2	C3	C4	C5
CONCRETE	3192 PSI	¼" ITW TAPCON (ATT)	45	12.0"	12.0"	12.0"	12.0"	12.0"	12.0"	12.0"	12.0"	9.6"	12.0"	12.0"	12.0"	7.3"	5.3"	6.3"
		MIN EMBED: 1.75"	57	12.0"	12.0"	12.0"	11.2"	12.0"	12.0"	12.0"	12.0"	7.4"	12.0"	12.0"	12.0"	6.5"	4.8"	5.4"
		MIN EDGE DIST: 3"	73	12.0"	12.0"	12.0"	8.5"	12.0"	12.0"	12.0"	8.2"	5.7"	7.3"	12.0"	12.0"	6.5"	4.8"	5.4"
			105	12.0"	12.0"	8.2"	5.7"	7.3"	12.0"	12.0"	6.5"	4.8"	5.4"	12.0"	12.0"	6.5"	4.8"	5.4"
			170	12.0"	12.0"	6.5"	4.8"	5.4"	12.0"	12.0"	6.5"	4.8"	5.4"	12.0"	12.0"	6.5"	4.8"	5.4"
	2700 PSI	¼" ELCO ULTRACON	45	12.0"	12.0"	12.0"	12.0"	12.0"	12.0"	12.0"	12.0"	8.7"	12.0"	12.0"	12.0"	6.3"	4.7"	5.7"
		MIN EMBED: 1.75"	57	12.0"	12.0"	12.0"	10.1"	12.0"	12.0"	12.0"	11.2"	6.6"	11.2"	12.0"	11.5"	5.6"	4.3"	4.8"
		MIN EDGE DIST: 2.5"	73	12.0"	12.0"	12.0"	7.6"	12.0"	12.0"	12.0"	7.0"	5.1"	6.6"	12.0"	11.5"	5.6"	4.3"	4.8"
			105	12.0"	12.0"	7.1"	5.1"	6.6"	12.0"	11.5"	5.6"	4.3"	4.8"	12.0"	11.5"	5.6"	4.3"	4.8"
			170	12.0"	11.5"	5.6"	4.3"	4.8"	12.0"	11.5"	5.6"	4.3"	4.8"	12.0"	11.5"	5.6"	4.3"	4.8"
	2899 PSI	5/16" ITW TAPCON	45	12.0"	12.0"	12.0"	12.0"	12.0"	12.0"	12.0"	12.0"	12.0"	12.0"	12.0"	12.0"	10.5"	8.2"	9.9"
		MIN EMBED: 2.25"	57	12.0"	12.0"	12.0"	12.0"	12.0"	12.0"	12.0"	12.0"	11.5"	12.0"	12.0"	12.0"	9.2"	7.5"	8.4"
		MIN EDGE DIST: 3.125"	73	12.0"	12.0"	12.0"	12.0"	12.0"	12.0"	12.0"	11.7"	8.8"	11.5"	12.0"	12.0"	9.2"	7.5"	8.4"
			105	12.0"	12.0"	11.8"	8.8"	11.6"	12.0"	12.0"	9.2"	7.5"	8.4"	12.0"	12.0"	9.2"	7.5"	8.4"
			170	12.0"	12.0"	9.2"	7.5"	8.4"	12.0"	12.0"	9.2"	7.5"	8.4"	12.0"	12.0"	9.2"	7.5"	8.4"
	3500 PSI	5/16" ELCO ULTRACON	45	12.0"	12.0"	12.0"	12.0"	12.0"	12.0"	12.0"	12.0"	12.0"	12.0"	12.0"	12.0"	8.7"	7.1"	8.7"
		MIN EMBED: 1.75"	57	12.0"	12.0"	12.0"	12.0"	12.0"	12.0"	12.0"	12.0"	10.0"	12.0"	12.0"	12.0"	7.7"	6.5"	7.3"
		MIN EDGE DIST: 3"	73	12.0"	12.0"	12.0"	11.4"	12.0"	12.0"	12.0"	9.7"	7.6"	10.1"	12.0"	12.0"	7.7"	6.5"	7.3"
			105	12.0"	12.0"	9.8"	7.6"	10.2"	12.0"	12.0"	7.7"	6.5"	7.3"	12.0"	12.0"	7.7"	6.5"	7.3"
			170	12.0"	12.0"	7.7"	6.5"	7.3"	12.0"	12.0"	7.7"	6.5"	7.3"	12.0"	12.0"	7.7"	6.5"	7.3"
	3000 PSI	¼-20 ALL POINTS SOLIO-SET	45	12.0"	12.0"	12.0"	12.0"	12.0"	12.0"	12.0"	12.0"	10.2"	12.0"	12.0"	12.0"	7.2"	5.6"	6.8"
		MIN EMBED: 0.875"	57	12.0"	12.0"	12.0"	11.9"	12.0"	12.0"	12.0"	12.0"	7.8"	12.0"	12.0"	12.0"	6.4"	5.1"	5.7"
		MIN EDGE DIST: 3"	73	12.0"	12.0"	12.0"	9.0"	12.0"	12.0"	12.0"	8.1"	6.0"	7.8"	12.0"	12.0"	6.4"	5.1"	5.7"
		*	105	12.0"	12.0"	8.1"	6.0"	7.9"	12.0"	12.0"	6.4"	5.1"	5.7"	12.0"	12.0"	6.4"	5.1"	5.7"
			170	12.0"	12.0"	6.4"	5.1"	5.7"	12.0"	12.0"	6.4"	5.1"	5.7"	12.0"	12.0"	6.4"	5.1"	5.7"

HOST STRUCT. & STRENGTH		ANCHOR	LOAD (PSF)	6'-0" C1	C2	C3	C4	C5	8'-8" C1	C2	C3	C4	C5	15'-0" C1	C2	C3	C4	C5
HOLLOW BLOCK	STD C-90	¼" ITW TAPCON	45	12.0"	12.0"	12.0"	6.1"	10.0"	12.0"	12.0"	8.3"	3.9"	6.9"	6.9"	5.4"			
		MIN EMBED: 1.25"	57	12.0"	12.0"	12.0"	4.6"	7.9"	9.5"	9.5"	4.6"	3.0"	5.4"	6.4"	4.7"			
		MIN EDGE DIST: 2.5"	73	10.7"	10.7"	6.1"	3.4"	6.1"	7.4"	6.1"			3.1"	6.4"	4.7"			
			105	7.4"	6.2"			3.1"	6.4"	4.7"				6.4"	4.7"			
			170	6.4"	4.7"				6.4"	4.7"				6.4"	4.7"			
	STD C-90	¼" ELCO ULTRACON	45	12.0"	12.0"	12.0"	6.0"	10.6"	10.8"	10.8"	7.4"	3.9"	7.3"	6.2"	4.9"			
		MIN EMBED: 1.25"	57	12.0"	12.0"	11.8"	4.5"	8.3"	8.5"	8.5"	4.1"		5.8"	5.7"	4.2"			
		MIN EDGE DIST: 2.5"	73	9.6"	9.6"	5.4"	3.4"	6.5"	6.6"	5.5"			3.1"	5.7"	4.2"			
			105	6.7"	5.5"			3.1"	5.7"	4.2"				5.7"	4.2"			
			170	5.7"	4.2"				5.7"	4.2"				5.7"	4.2"			
	STD C-90	5/16" ITW TAPCON	45	12.0"	12.0"	12.0"	9.1"	12.0"	12.0"	12.0"	11.1"	5.8"	11.0"	9.3"	7.3"			3.9"
		MIN EMBED: 1.25"	57	12.0"	12.0"	12.0"	6.8"	12.0"	12.0"	12.0"	6.2"	4.4"	8.7"	8.6"	6.3"			
		MIN EDGE DIST: 4"	73	12.0"	12.0"	8.1"	5.1"	9.8"	9.9"	8.2"	3.9"		4.6"	8.6"	6.3"			
			105	9.9"	8.3"	3.9"		4.7"	8.6"	6.3"				8.6"	6.3"			
			170	8.6"	6.3"				8.6"	6.3"				8.6"	6.3"			
	STD C-90	5/16" ELCO ULTRACON	45	12.0"	12.0"	12.0"	8.6"	12.0"	12.0"	12.0"	12.0"	5.6"	9.6"	10.1"	7.9"	3.8"		
		MIN EMBED: 1.25"	57	12.0"	12.0"	12.0"	6.5"	11.0"	12.0"	12.0"	6.7"	4.3"	7.6"	9.3"	6.9"			
		MIN EDGE DIST: 3"	73	12.0"	12.0"	8.8"	4.9"	8.6"	10.8"	8.9"	4.2"		4.3"	9.3"	6.9"			
			105	10.8"	9.0"	4.2"		4.4"	9.3"	6.9"				9.3"	6.9"			
			170	9.3"	6.9"				9.3"	6.9"				9.3"	6.9"			
	1800 PSI	¼-20 ALL POINTS SOLID-SET	45	12.0"	12.0"	12.0"	11.3"	12.0"	12.0"	12.0"	12.0"	7.4"	12.0"	12.0"	11.0"	5.3"	4.0"	4.9"
		MIN EMBED: 0.875"	57	12.0"	12.0"	12.0"	8.6"	12.0"	12.0"	12.0"	9.3"	5.6"	9.6"	12.0"	9.6"	4.6"	3.7"	4.1"
		MIN EDGE DIST: 3"	73	12.0"	12.0"	12.0"	6.4"	10.8"	12.0"	12.0"	5.9"	4.3"	5.6"	12.0"	9.6"	4.6"	3.7"	4.1"
		*	105	12.0"	12.0"	5.9"	4.3"	5.7"	12.0"	9.6"	4.6"	3.7"	4.1"	12.0"	9.6"	4.6"	3.7"	4.1"
			170	12.0"	9.6"	4.6"	3.7"	4.1"	12.0"	9.6"	4.6"	3.7"	4.1"	12.0"	9.6"	4.6"	3.7"	4.1"

NOTE: REFER TO SPAN SCHEDULES FOR MAX ALLOWABLE SPANS AND PRESSURES

HOST STRUCT. & STRENGTH		ANCHOR	LOAD (psf)	SPANS UP TO 6'-0" CONN TYPE C1	C2	C3	C4	C5	SPANS UP TO 8'-8" CONN TYPE C1	C2	C3	C4	C5	SPANS UP TO 15'-0" CONN TYPE C1	C2	C3	C4	C5
WOOD	G ≥ 0.55	#14 WOOD SCREW	45	12.0"	12.0"	12.0"	5.7"	8.2"	12.0"	12.0"	9.9"	3.7"	5.7"	8.3"	6.5"	3.1"	2.1"	2.4"
		MIN EMBED: 1.5"	57	12.0"	12.0"	12.0"	4.3"	6.5"	11.4"	11.4"	5.5"	2.9"	4.5"	7.7"	5.7"	2.7"	1.9"	2.1"
		MIN EDGE DIST: 0.75"	73	12.0"	12.0"	7.3"	3.3"	5.0"	8.9"	7.3"	3.5"	2.2"	2.8"	7.7"	5.7"	2.7"	1.9"	2.1"
			105	8.9"	7.4"	3.5"	2.2"	2.8"	7.7"	5.7"	2.7"	1.9"	2.1"	7.7"	5.7"	2.7"	1.9"	2.1"
			170	7.7"	5.7"	2.7"	1.9"	2.1"	7.7"	5.7"	2.7"	1.9"	2.1"	7.7"	5.7"	2.7"	1.9"	2.1"
	G ≥ 0.55	¼" LAG SCREW	45	12.0"	12.0"	12.0"	6.4"	8.1"	12.0"	12.0"	12.0"	4.3"	5.6"	12.0"	10.9"	5.2"	2.4"	2.7"
		MIN EMBED: 1.5"	57	12.0"	12.0"	12.0"	4.9"	6.4"	12.0"	12.0"	9.2"	3.3"	4.4"	12.0"	9.5"	4.6"	2.2"	2.4"
		MIN EDGE DIST: 0.75"	73	12.0"	12.0"	12.0"	3.8"	5.0"	12.0"	12.0"	5.8"	2.6"	3.0"	12.0"	9.5"	4.6"	2.2"	2.4"
		EMBED	105	12.0"	12.0"	5.8"	2.6"	3.0"	12.0"	9.5"	4.6"	2.2"	2.4"	12.0"	9.5"	4.6"	2.2"	2.4"
			170	12.0"	9.5"	4.6"	2.2"	2.4"	12.0"	9.5"	4.6"	2.2"	2.4"	12.0"	9.5"	4.6"	2.2"	2.4"
	G ≥ 0.55	¼" MASONRY SCREW	45	12.0"	12.0"	12.0"	6.2"	7.8"	12.0"	12.0"	12.0"	4.1"	5.4"	12.0"	10.1"	4.8"	2.3"	2.6"
		MIN EMBED: 1.5"	57	12.0"	12.0"	12.0"	4.8"	6.2"	12.0"	12.0"	8.6"	3.2"	4.3"	11.9"	8.8"	4.2"	2.1"	2.3"
		MIN EDGE DIST: 0.75"	73	12.0"	12.0"	11.2"	3.6"	4.8"	12.0"	11.4"	5.4"	2.5"	2.9"	11.9"	8.8"	4.2"	2.1"	2.3"
			105	12.0"	11.5"	5.4"	2.5"	2.9"	11.9"	8.8"	4.2"	2.1"	2.3"	11.9"	8.8"	4.2"	2.1"	2.3"
			170	11.9"	8.8"	4.2"	2.1"	2.3"	11.9"	8.8"	4.2"	2.1"	2.3"	11.9"	8.8"	4.2"	2.1"	2.3"

NOTE: REFER TO SPAN SCHEDULES FOR MAX ALLOWABLE SPANS AND PRESSURES

ANCHOR NOTES:

1. ANCHORS SHALL BE INSTALLED IN ACCORDANCE WITH MANUFACTURER'S RECOMMENDATIONS.
2. MINIMUM EMBEDMENT AND EDGE DISTANCE SHALL BE AS NOTED IN ANCHOR SCHEDULE.
3. ENSURE MINIMUM 3/4" EDGE DISTANCE FOR ALL ANCHORS TO WOOD FRAMING (i.e. ANCHOR SHALL BE LOCATED IN CENTER OF STUD WHERE FASTENED TO NARROW FACE OF NOMINAL 2x FRAMING).
4. MINIMUM EMBEDMENT AND EDGE DISTANCE EXCLUDES STUCCO, FOAM, BRICK, AND OTHER WALL FINISHES.
5. ANCHOR SCHEDULE APPLIES TO ALL PRODUCTS CERTIFIED HEREIN, BUT ONLY PROVIDES MAXIMUM ALLOWABLE ANCHOR SPACING. MAX ALLOWABLE SPANS AND PRESSURES INDICATED IN SPAN SCHEDULE(S) SHALL APPLY.
6. WHERE HOST STRUCTURE IS WOOD FRAMING, VERIFY THAT FASTENERS ARE INTO ADEQUATE WOOD FRAMING MEMBERS, NOT INTO PLYWOOD (U.N.O.).
7. MACHINE SCREWS SHALL HAVE MINIMUM OF 1/2" ENGAGEMENT OF THREADS IN BASE ANCHOR AND MAY HAVE EITHER A PAN HEAD, TRUSS HEAD, OR WAFER HEAD ("SIDEWALK BOLT") U.N.O.
8. * DESIGNATES REMOVABLE ANCHORS.

GLASS SEPARATION SCHEDULE

BLADE SPAN	POSITIVE PRESSURE	ALUMINUM BLADES ONLY: AT OR BELOW 30 FT ABOVE GRADE	ALUMINUM BLADES ONLY: MORE THAN 30 FT ABOVE GRADE	POLYCARB BLADES (WITH OR WITHOUT ALUM BLADES): AT OR BELOW 30 FT ABOVE GRADE	POLYCARB BLADES (WITH OR WITHOUT ALUM BLADES): MORE THAN 30 FT ABOVE GRADE
5'-0"	45.0 PSF	2 7/8"	1 1/2"	2 1/2"	1 3/8"
	54.0 PSF	2 7/8"	1 1/2"	2 1/2"	1 3/8"
	73.0 PSF	2 7/8"	1 1/2"	2 1/2"	1 3/8"
	105.0 PSF	2 7/8"	1 1/2"	2 1/2"	1 3/8"
	146.4 PSF	2 7/8"	1 1/2"	2 1/2"	1 3/8"
7'-0"	45.0 PSF	2 7/8"	1 5/8"	2 1/2"	1 1/2"
	54.0 PSF	2 7/8"	1 5/8"	2 1/2"	1 1/2"
	73.0 PSF	2 7/8"	1 5/8"	2 1/2"	1 5/8"
	104.6 PSF	2 7/8"	1 3/4"	2 1/2"	1 3/4"
8'-0"	45.0 PSF	2 7/8"	1 5/8"	2 1/2"	1 5/8"
	54.0 PSF	2 7/8"	1 3/4"	2 1/2"	1 3/4"
	73.0 PSF	2 7/8"	1 7/8"	2 1/2"	1 7/8"
	91.4 PSF	2 7/8"	2"		
9'-0"	45.0 PSF	3"	1 7/8"		
	54.0 PSF	3"	1 7/8"		
	73.0 PSF	3"	2 1/8"		
	81.3 PSF	3"	2 1/8"		
10'-0"	45.0 PSF	3"	2"		
	54.0 PSF	3"	2 1/4"		
	73.2 PSF	3"	2 1/2"		
12'-0"	45.0 PSF	3"	2 3/4"		
	54.8 PSF	3"	3"		
15'-0"	22.4 PSF	3"	3"		

GLASS SEPARATION SCHEDULE NOTES:

1. SCHEDULE GIVES MINIMUM REQ'D SEPARATION FROM GLAZING.
2. SEPARATION IS MEASURED FROM GLASS TO NEAREST PART OF SHUTTER ASSEMBLY - REF MOUNTING SECTION DETAILS.
3. WHERE ANY POLYCARB BLADES ARE INCLUDED IN A PARTICULAR SHUTTER ASSEMBLY, USE GLASS SEPARATION UNDER "POLYCARB BLADES".

PRODUCT REVISED
as complying with the Florida Building Code
Acceptance No 11-0518.08
Expiration Date 07/20/2016
By [signature]
Miami Dade Product Control

C.A. #28511
NU-WIND ENGINEERING
UNIQUE PROBLEMS ... STANDARD SOLUTIONS
1200 N FEDERAL HWY, #200
BOCA RATON, FL 33432
www.nu-wind.com
Ofc: (954) 333-8965
Fax: (954) 719-3707
CHRISTIAN LANGLEY, PE
FL PE #67382 ; CA #28511

REVISIONS DATE	DESCRIPTION	BY
4/7/11	INITIAL SUBMITTAL	CL
-	-	-
-	-	-
-	-	-
-	-	-

PRODUCT: HT-100 ACCORDION SHUTTER
MIAMI-DADE BCCO NOTICE OF ACCEPTANCE

MANUFACTURER: HURRICANE HOME PROTECTION, Inc.
14932 SW 173rd TERR
MIAMI, FL 33187

DRAWING NUMBER: HTS.09003q

SHEET 7 OF 7

HTS.09003_01f Alum-Shutters (q).dwg (Cr: 8/31/2010 16:16)