MIAMI-DADE COUNTY
DEPARTMENT OF REGULATORY AND ECONOMIC RESOURCES (RER)
BOARD AND CODE ADMINISTRATION DIVISION

MIAMI-DADE COUNTY
PRODUCT CONTROL SECTION
11805 SW 26 Street, Room 208
Miami, Florida 33175-2474
T (786) 315-2590 F (786) 315-2599
www.miamidade.gov/economy

NOTICE OF ACCEPTANCE (NOA)

Sun-Tek Manufacturing, Inc.
10303 General Drive
Orlando, Florida 32824

SCOPE:
This NOA is being issued under the applicable rules and regulations governing the use of construction materials. The documentation submitted has been reviewed and accepted by Miami-Dade County RER- Product Control Section to be used in Miami Dade County and other areas where allowed by the Authority Having Jurisdiction (AHJ).

This NOA shall not be valid after the expiration date stated below. The Miami-Dade County Product Control Section (In Miami Dade County) and/or the AHJ (in areas other than Miami Dade County) reserve the right to have this product or material tested for quality assurance purposes. If this product or material fails to perform in the accepted manner, the manufacturer will incur the expense of such testing and the AHJ may immediately revoke, modify, or suspend the use of such product or material within their jurisdiction. RER reserves the right to revoke this acceptance, if it is determined by Miami-Dade County Product Control Section that this product or material fails to meet the requirements of the applicable building code.

This product is approved as described herein, and has been designed to comply with the High Velocity Hurricane Zone of the Florida Building Code.

DESCRIPTION: Sun-Tek Tubular Skylight

APPROVAL DOCUMENT: Drawing No. **22001**, titled "21", 14" & 10" Tube Light/Tubular Skylights", sheets 1 through 7 of 7, prepared by Sun-Tek Manufacturing, Inc., dated 10/14/2011, signed and sealed by James D. Wells, Jr., P.E., on 10/14/2011, bearing the Miami-Dade County Product Control revision stamp with the Notice of Acceptance number and the expiration date by the Miami-Dade County Product Control Section.

MISSILE IMPACT RATING: Large and Small Missile Impact Resistant.

LABELING: Each unit shall bear a permanent label with the manufacturer's name or logo, city, state and following statement: "Miami-Dade County Product Control Approved", unless otherwise noted herein.

RENEWAL of this NOA shall be considered after a renewal application has been filed and there has been no change in the applicable building code negatively affecting the performance of this product.

TERMINATION of this NOA will occur after the expiration date or if there has been a revision or change in the materials, use, and/or manufacture of the product or process. Misuse of this NOA as an endorsement of any product, for sales, advertising or any other purposes shall automatically terminate this NOA. Failure to comply with any section of this NOA shall be cause for termination and removal of NOA.

ADVERTISEMENT: The NOA number preceded by the words Miami-Dade County, Florida, and followed by the expiration date may be displayed in advertising literature. If any portion of the NOA is displayed, then it shall be done in its entirety.

INSPECTION: A copy of this entire NOA shall be provided to the user by the manufacturer or its distributors and shall be available for inspection at the job site at the request of the Building Official.

This NOA **revises & renews NOA # 09-0422.01** and consists of this page 1 and evidence submitted pages E-1 & E-2 as well as approval document mentioned above.
The submitted documentation was reviewed by **Helmy A. Makar, P.E., M.S.**

MIAMI-DADE COUNTY APPROVED

05/16/2013

NOA No 11-0601.05
Expiration Date: 05/26/ 2018
Approval Date: 05/16, 2013

NOTICE OF ACCEPTANCE: EVIDENCE SUBMITTED

1. EVIDENCE SUBMITTED UNDER PREVIOUS APPROVAL # 09-0422.01

A. DRAWINGS

*1. Drawing No. **TL-22001**, titled "21", 14" & 10" Tube Light/Tubular Skylights", sheets 1 through 7 of 7, prepared by Sun-Tek Industries, Inc., dated 02/12/09, signed and sealed by James D. Wells, Jr., P.E.*

B. TESTS

1. Test reports on 1) Air Infiltration Test, per FBC, TAS 202-94
2) Uniform Static Air Pressure Test, Loading per FBC TAS 202-94
3) Water Resistance Test, per FBC, TAS 202-94
4) Large Missile Impact Test per FBC, TAS 201-94
5) Cyclic Wind Pressure Loading per FBC, TAS 203-94
6) Forced Entry Test, per FBC 2411 3.2.1, TAS 202-94
*along with marked-up drawings and installation diagram of 21" Tube Aluminum Skylights, prepared by National Certified Testing Laboratories, Test Report No. **210-3520-01**, dated 03/04/09, signed and sealed by Gerard J. Ferrara, P.E.*

C. CALCULATIONS

1. Anchor calculations prepared by J & L Wells Consulting, LLC, dated 04/14/09, signed and sealed by James D. Wells, Jr., P.E.

D. QUALITY ASSURANCE

1. Miami Dade Building Code Compliance Office (BCCO)

E. MATERIAL CERTIFICATIONS

*1. Notice of Acceptance No. **08-0305.02**, issued to SABIC Innovative Plastics, for their Lexan Sheet Products, approved on 04/24/08 and expiring on 07/17/13.*

*2. Notice of Acceptance No. **05-0907.03**, issued to Palram Americas, Inc., for their Corrugated and Flat Polycarbonate Panels, approved on 08/31/06 and expiring on 01/22/2011.*

F. STATEMENTS

1. Code compliance statement issued by J & L Wells Consulting, LLC, dated 04/14/09, signed and sealed by James D. Wells, Jr., P.E.

Helmy A. Makar, P.E., M.S.
Product Control Unit Supervisor
NOA No 11-0601.05
Expiration Date: 05/26/ 2018
Approval Date: 05/16, 2013

NOTICE OF ACCEPTANCE: EVIDENCE SUBMITTED

2. NEW EVIDENCE SUBMITTED

A. DRAWINGS

1. *Drawing No. **22001**, titled "21", 14" & 10" Tube Light/Tubular Skylights", sheets 1 through 7 of 7, prepared by Sun-Tek Manufacturing, Inc., dated 10/14/2011, signed and sealed by James D. Wells, Jr., P.E., on 10/14/2011.*

B. TESTS

1. *None.*

C. CALCULATIONS

1. *None.*

D. QUALITY ASSURANCE

1. *By Miami-Dade County Department of Regulatory and Economic Resources.*

E. MATERIAL CERTIFICATIONS

1. *None.*

Hehmy A. Makar, P.E., M.S.
Product Control Unit Supervisor
NOA No 11-0601.05
Expiration Date: 05/26/ 2018
Approval Date: 05/16, 2013

J&L WELLS CONSULTING LLC
1453 Arbitus Circle
Oviedo, FL 32765
(407) 496-5489
Certificate of Authorization No. 27162

Engineer of Record:
James D. Wells, Jr., P.E.
Professional Engineer No. 53616

PART NAME: EXTERIOR DOME / METRO DADE / PLAN VIEW

SHEET 1 OF 7
DRAWN BY: L. B. REED

DWG.#:22001

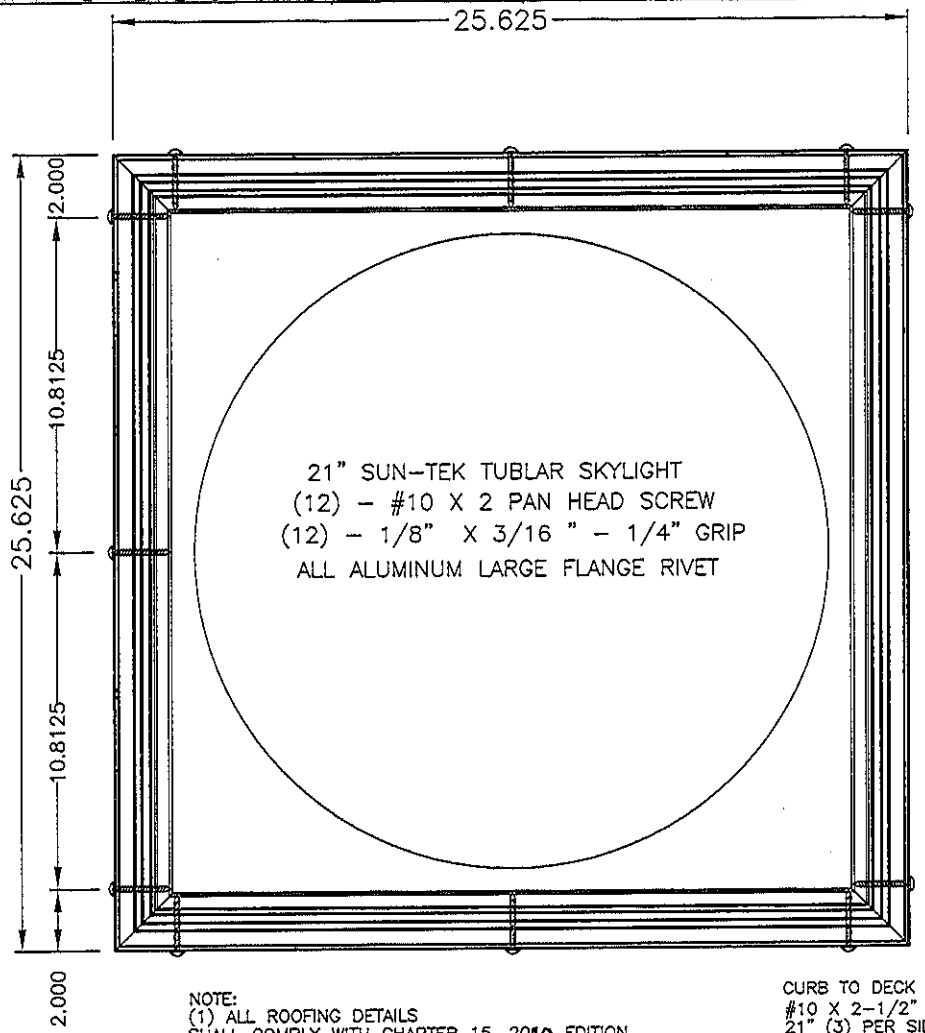

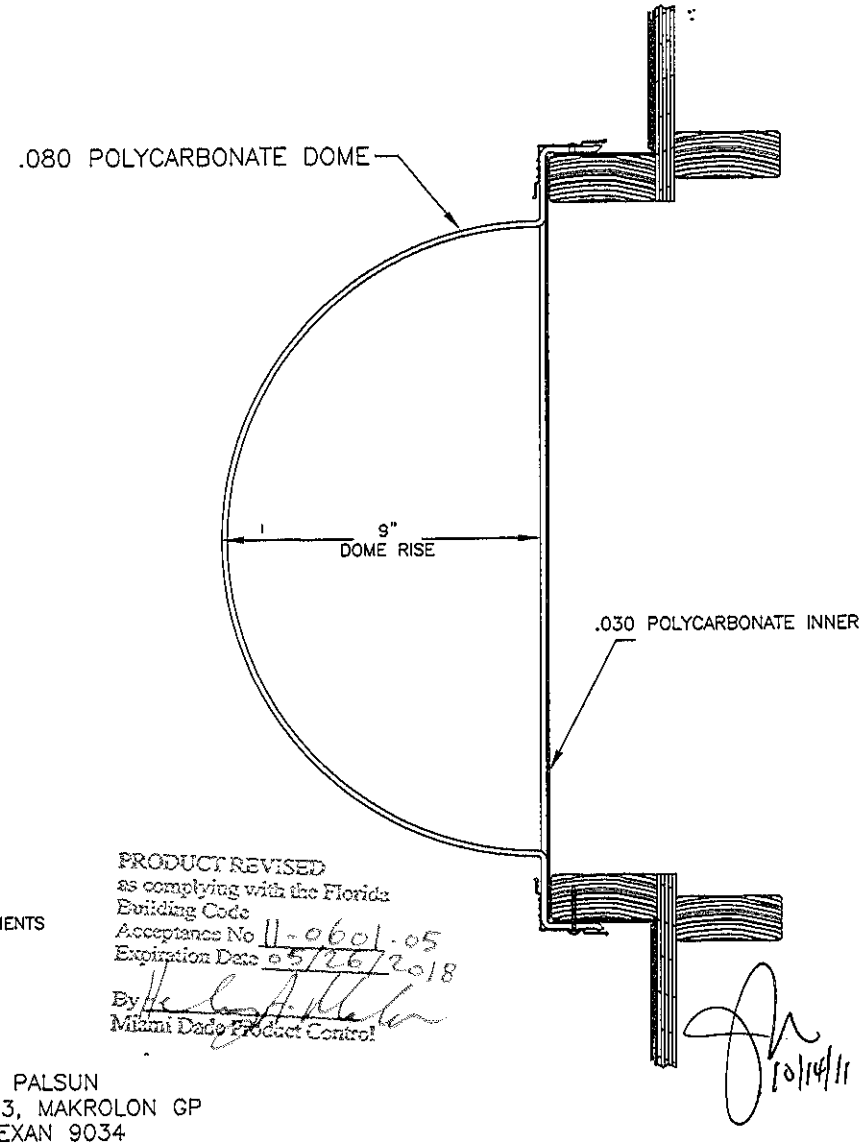

NOTE:
(1) ALL ROOFING DETAILS SHALL COMPLY WITH CHAPTER 15, 2010 EDITION OF THE FLORIDA BUILDING CODE
(2) 4" MINIMUM DISTANCE FROM ANGLE LIP TO ROOF SURFACE IS FOR SHINGLE OR BUILT - UP ROOF WITH OUT INSULATION. FOR INSULATION AND TILE ADD THE TILE HEIGHT
(3) ANCHOR TO BE MADE OF NON-CORRISIVE MATERIAL COMPATABLE WITH ALUMINUM

CURB TO DECK MOUNTING REQUIREMENTS
#10 X 2-1/2" DECK SCREWS
21" (3) PER SIDE 12 TOTAL
POSITIVE DESIGN LOAD 65 PSF
NEGATIVE DESIGN LOAD 65 PSF
WATER TEST PRESSURE 15 PSF
.080 POLYCARBONATE DOME
.030 POLYCARBONATE INNER
.PALRAM NOA 10-0913.07, PALSUN
SHEFFIELD NOA 10-0329.03, MAKROLON GP
SABIC NOA 08-0305.02, LEXAN 9034

PRODUCT REVISED
as complying with the Florida Building Code
Acceptance No 11-0601.05
Expiration Date 05/26/2018
By
Miami Dade Product Control

10/14/11

REVISION:		REVISION:		PRODUCT NAME: 21" TUBE LIGHT	SUN-TEK MANUFACTURING, INC.
INI:	DATE:	INI:	DATE:	DATE: 10/14/2011 SCALE: DWG No. 22001	10303 GENERAL DRIVE ORLANDO, FL 32824

J&L WELLS CONSULTING LLC
1453 Arbitus Circle
Oviedo, FL 32765
(407) 496-5489
Certificate of Authorization No. 27162

Engineer of Record:
James D. Wells, Jr., P.E.
Professional Engineer No. 53616

PART NAME: EXTERIOR DOME / METRO DADE / PLAN VIEW	SHEET 2 OF 7 DRAWN BY: L. B. REED	DWG.#:22001

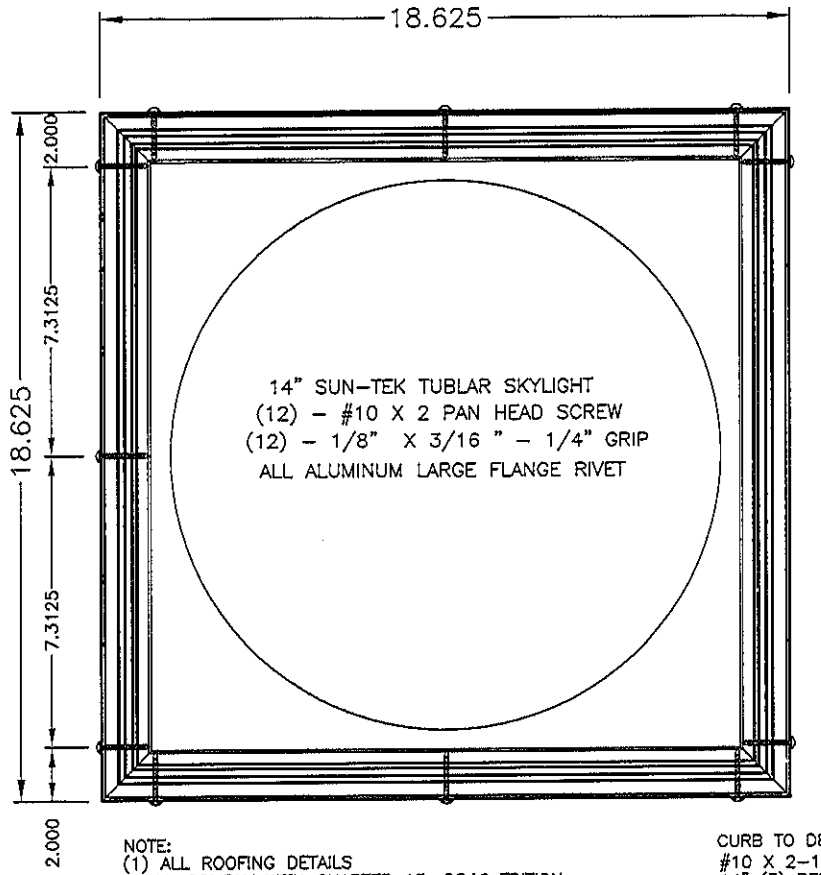

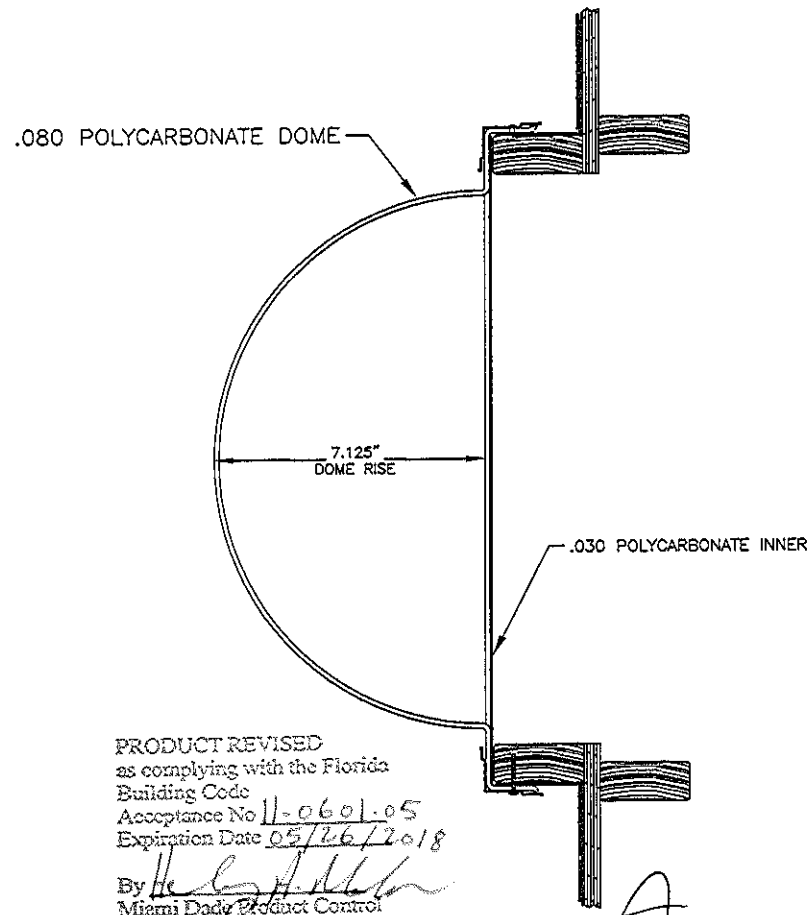

NOTE:
(1) ALL ROOFING DETAILS SHALL COMPLY WITH CHAPTER 15, 2010 EDITION OF THE FLORIDA BUILDING CODE
(2) 4" MINIMUM DISTANCE FROM ANGLE LIP TO ROOF SURFACE IS FOR SHINGLE OR BUILT - UP ROOF WITH OUT INSULATION. FOR INSULATION AND TILE ADD THE TILE HEIGHT
(3) ANCHOR TO BE MADE OF NON-CORRISIVE MATERIAL COMPATABLE WITH ALUMINUM

CURB TO DECK MOUNTING REQUIREMENTS
#10 X 2-1/2" DECK SCREWS
14" (3) PER SIDE 12 TOTAL
POSITIVE DESIGN LOAD 65 PSF
NEGATIVE DESIGN LOAD 65 PSF
WATER TEST PRESSURE 15 PSF
.080 POLYCARBONATE DOME
.030 POLYCARBONATE INNER
PALRAM NOA 10-0913.07, PALSUN
SHEFFIELD NOA 10-0329.03, MAKROLON GP
SABIC NOA 08-0305.02, LEXAN 9034

PRODUCT REVISED
as complying with the Florida
Building Code
Acceptance No 11-0601.05
Expiration Date 05/26/2018
By
Miami Dade Product Control

10/14/11

REVISION:		REVISION:		PRODUCT NAME: 14" TUBE LIGHT	SUN-TEK MANUFACTURING, INC.
INI:	DATE:	INI:	DATE:	DATE: 10/14/2011 SCALE: DWG No. 22001	10303 GENERAL DRIVE ORLANDO, FL 32824

J&L WELLS CONSULTING LLC
1453 Arbitus Circle
Oviedo, FL 32765
(407) 496-5489
Certificate of Authorization No. 27162

Engineer of Record:
James D. Wells, Jr., P.E.
Professional Engineer No. 53616

PART NAME: EXTERIOR DOME / METRO DADE / PLAN VIEW	SHEET 3 OF 7 DRAWN BY: L. B. REED	DWG.#:22001

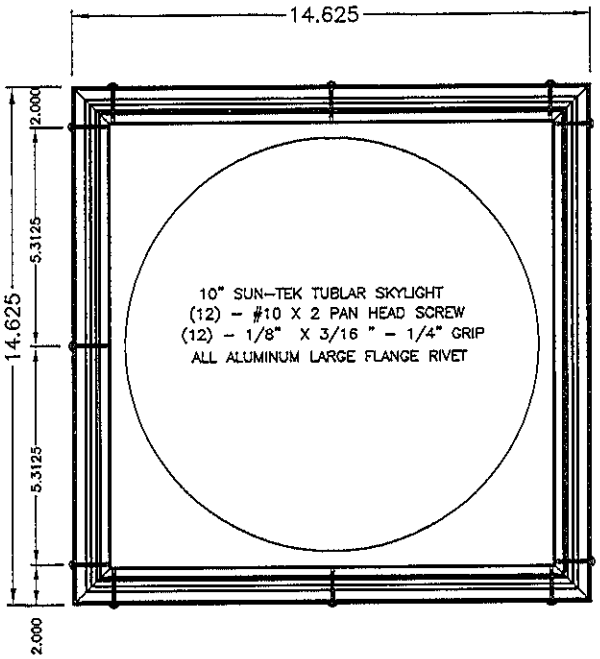

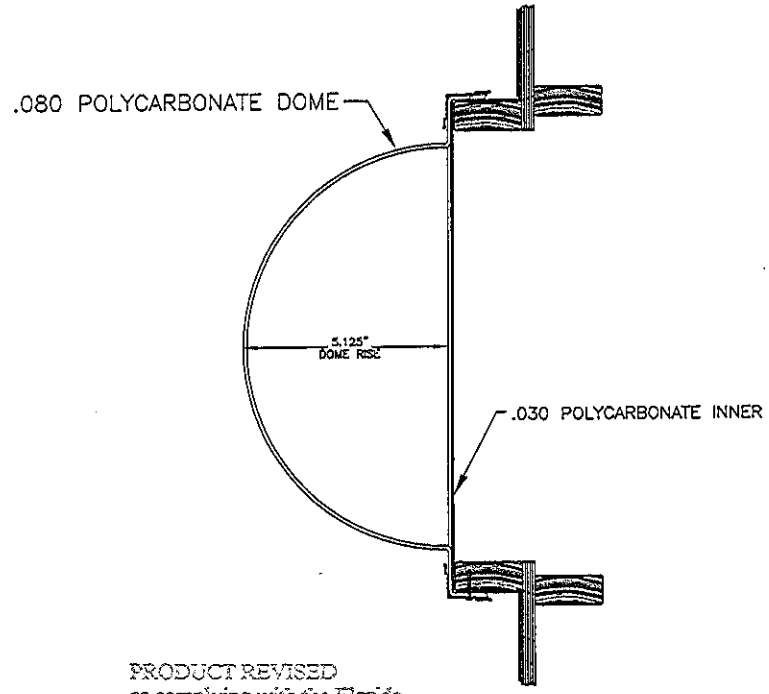

NOTE:
(1) ALL ROOFING DETAILS SHALL COMPLY WITH CHAPTER 15, 2010 EDITION OF THE FLORIDA BUILDING CODE
(2) 4" MINIMUM DISTANCE FROM ANGLE LIP TO ROOF SURFACE IS FOR SHINGLE OR BUILT - UP ROOF WITH OUT INSULATION. FOR INSULATION AND TILE ADD THE TILE HEIGHT
(3) ANCHOR TO BE MADE OF NON-CORRISIVE MATERIAL COMPATABLE WITH ALUMINUM

CURB TO DECK MOUNTING REQUIREMENTS
#10 X 2-1/2" DECK SCREWS
10" (3) PER SIDE 12 TOTAL
POSITIVE DESIGN LOAD 65 PSF
NEGATIVE DESIGN LOAD 65 PSF
WATER TEST PRESSURE 15 PSF
.080 POLYCARBONATE DOME
.030 POLYCARBONATE INNER
PALRAM NOA 10-0913.07, PALSUN
SHEFFIELD NOA 10-0329.03, MAKROLON GP
SABIC NOA 08-0305.02, LEXAN 9034

PRODUCT REVISED
as complying with the Florida
Building Code
Acceptance No 11-0601.05
Expiration Date 05/26/2018
By
Miami Dade Product Control

10/14/11

REVISION:		REVISION:		PRODUCT NAME: 10" TUBE LIGHT		SUN-TEK MANUFACTURING, INC.
INI:	DATE:	INI:	DATE:	DATE: 10/14/2011	SCALE:	DWG No. 22001

10303 GENERAL DRIVE ORLANDO, FL 32824

J&L WELLS CONSULTING LLC
1453 Arbitus Circle
Oviedo, FL 32765
(407) 496-5489
Certificate of Authorization No. 27162

Engineer of Record:
James D. Wells, Jr., P.E.
Professional Engineer No. 53616

PART NAME: DECO RING	SHEET 4 OF 7 DRAWN BY: S RYAN	DWG.#: 22001

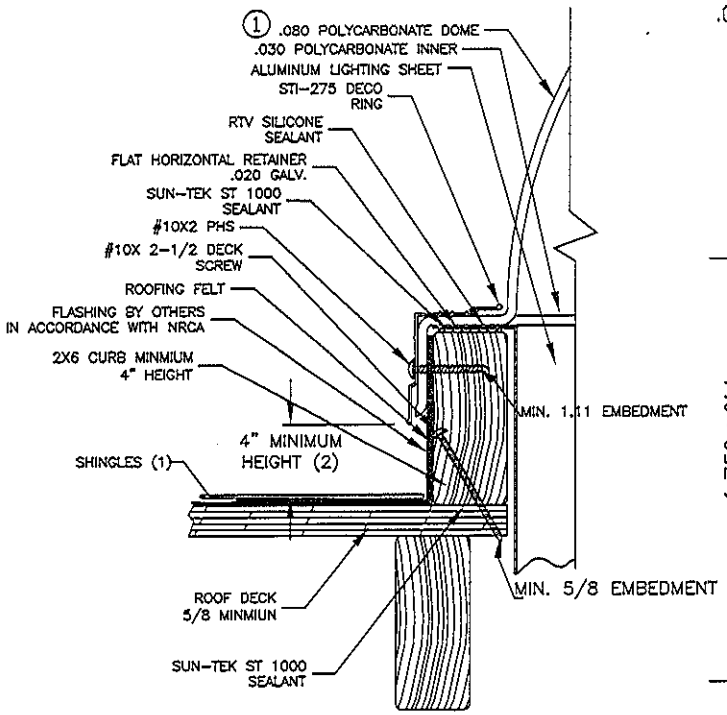

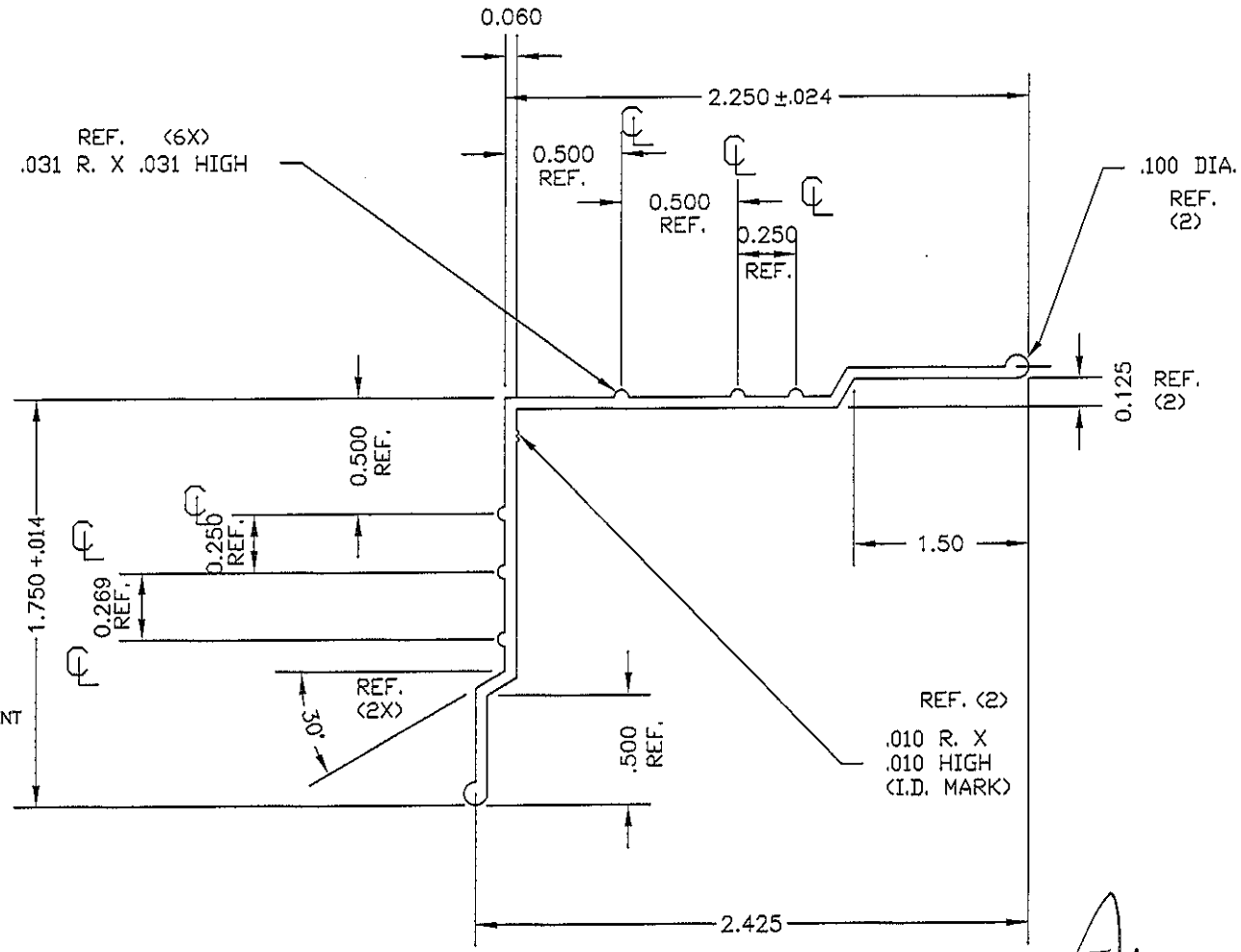

PRODUCT REVISED
as complying with the Florida
Building Code
Acceptance No 11-0601.05
Expiration Date 5/26/2018
By
Miami-Dade County Product Control

1 PALRAM NOA 10-0913.07, PALSUN
SHEFFIELD NOA 10-0329.03, MAKROLON GP
SABIC NOA 08-0305.02, LEXAN 9034

MATERIAL: SOLID ALUMINUM, 6063 T6 GRADE
.264 WT/FT

10/14/11

REVISION:		REVISION:		PRODUCT NAME: 21", 14" & 10" TUBE LIGHT	SUN-TEK MANUFACTURING, INC.
INI:	DATE:	INI:	DATE:	DATE: 10/14/2011 SCALE: DWG No. 22001	10303 GENERAL DRIVE ORLANDO, FL 32824

J&L WELLS CONSULTING LLC
1453 Arbitus Circle
Oviedo, FL 32765
(407) 496-5489
Certificate of Authorization No. 27162

Engineer of Record:
James D. Wells, Jr., P.E.
Professional Engineer No. 53616

PART NAME: CM DOME	SHEET 5 OF 7 DRAWN BY: S. RYAN	DWG.#:22001

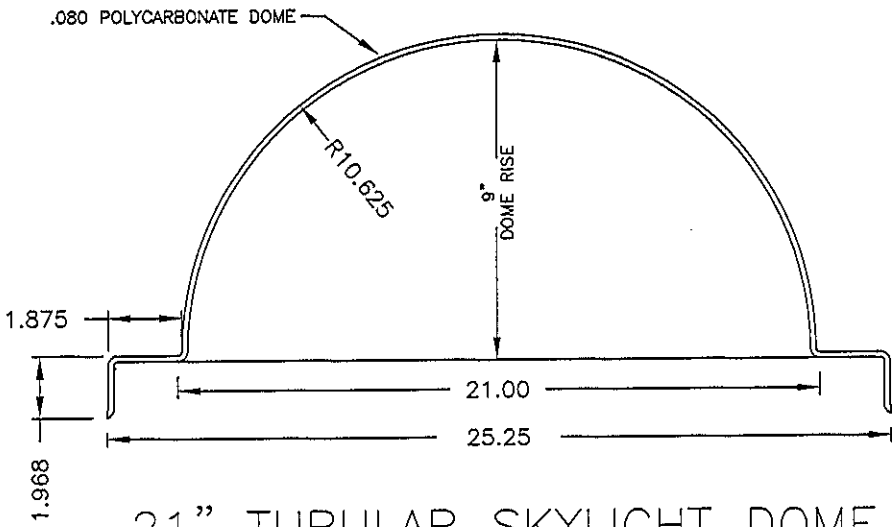

21" TUBULAR SKYLIGHT DOME

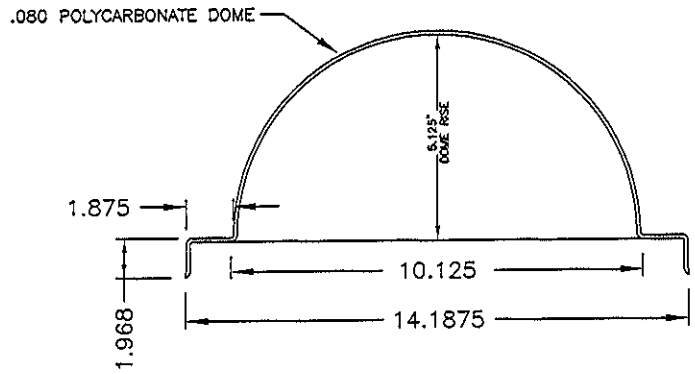

10" TUBULAR SKYLIGHT DOME

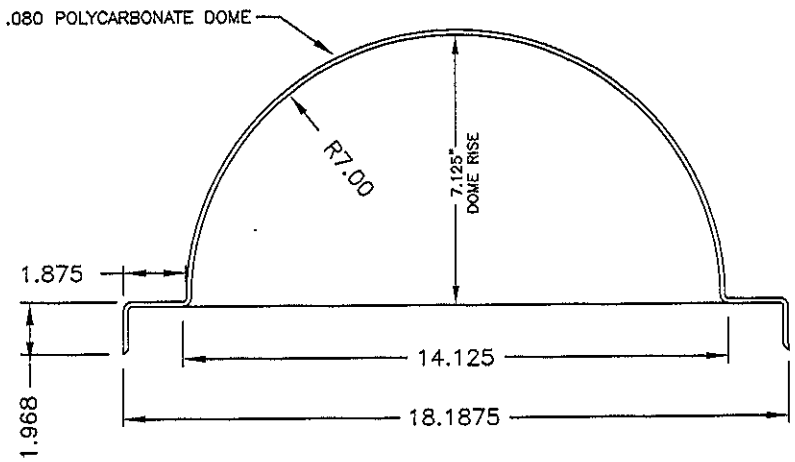

14" TUBULAR SKYLIGHT DOME

PRODUCT REVISED
as complying with the Florida
Building Code
Acceptance No 11-0601.05
Expiration Date 05/26/2018
By
Miami Dade Product Control

DOME MATERIAL

.PALRAM NOA 10-0913.07, PALSUN
SHEFFIELD NOA 10-0329.03, MAKROLON GP
SABIC NOA 08-0305.02, LEXAN 9034

10/14/11

REVISION:		REVISION:		PRODUCT NAME: 21", 14" & 10" TUBE LIGHT	SUN-TEK MANUFACTURING, INC. 10303 GENERAL DRIVE ORLANDO, FL 32824
INI:	DATE:	INI:	DATE:	DATE: 10/14/2011 SCALE: DWG No. 22001	

J&L WELLS CONSULTING LLC
1453 Arbitus Circle
Oviedo, FL 32765
(407) 496-5489
Certificate of Authorization No. 27162

Engineer of Record:
James D. Wells, Jr., P.E.
Professional Engineer No. 53616

PART NAME: INSTALLATION DESCRIPTION

SHEET 6 OF 7
DRAWN BY: L. B. REED

DWG.#: 22001

ITEM	PART NAME	DISCRIPTION	VENDOR
1	EXTERIOR DOME	.080 POLYCARBONATE DOME	SEE DOME MATERIAL
2	* SEALING TAPE	DUCT TAPE 2"	VENTURE TAPE
3	* ELBOWS	MIRO 4	ALANOD
4	* CONNECTOR	MIRO 4	ALANOD
5	LENS RING ASSEMBLY	INTERIOR DOME	
6	#10 PHS X 2"	FASTENERS EXTERIOR DOME	MERIT FASTENER
7	* #6 X1/2"HEX TEK	TUBE FASTENERS	MERIT FASTENER
8	#10 X2-1/2" DECK SCREWS	CURB ANCHORS	MERIT FASTENER
9	1/8 X3/16" GRIP ALUM. LARGE FLANGE RIVET	DECO RING FASTENER	Mc MASTER-CARR
10	* .020 GALV.	TUBE RETAINER	
11	DECO RING	EXTRUSION	
12	INNER PANEL	.030 POLYCARBONATE INNER	

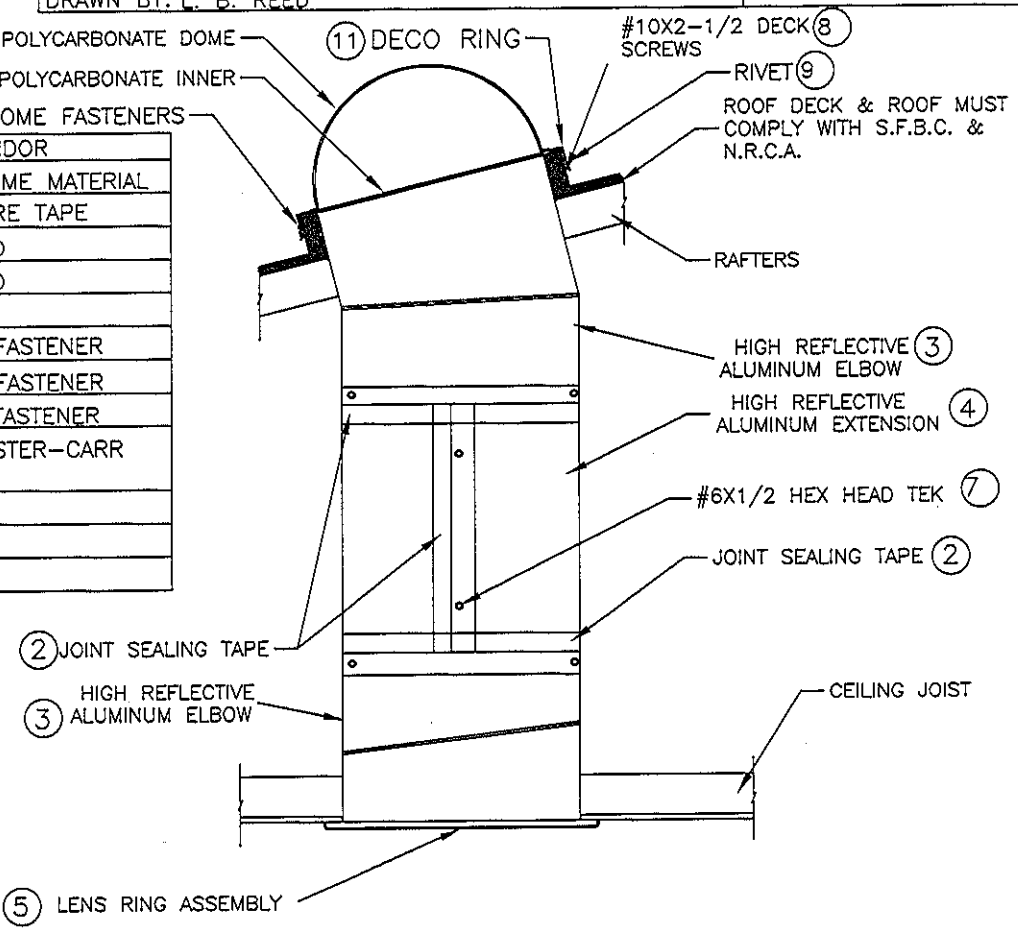

* THIS APPROVAL IS LIMITED TO THE DOME AND THE ATTACHMENT TO THE STRUCTURE AND THE ROOF. ALL OTHERS ARE NOT PART OF THIS APPROVAL.

DOME SPECIFICATIONS

21" DOME HEIGHT 9"

14" DOME HEIGHT 7-1/8"

10" DOME HEIGHT 5-1/8"

DOME MATERIAL

.PALRAM NOA 10-0913.07, PALSUN
SHEFFIELD NOA 10-0329.03, MAKROLON GP
SABIC NOA 08-0305.02, LEXAN 9034

PRODUCT REVISED
as complying with the Florida Building Code
Acceptance No 11-0601.05
Expiration Date 05/26/2018
By
Miami Dade Product Control

10/14/11

REVISION:		REVISION:		PRODUCT NAME: TUBULAR SKYLIGHT		SUN-TEK MANUFACTURING, INC.
INI:	DATE:	INI:	DATE:	DATE: 10/14/2011	SCALE:	DWG No. 22001

10303 GENERAL DRIVE ORLANDO, FL 32824

J&L WELLS CONSULTING LLC
1453 Arbitus Circle
Oviedo, FL 32765
(407) 496-5489
Certificate of Authorization No. 27162

Engineer of Record:
James D. Wells, Jr., P.E.
Professional Engineer No. 53616

PART NAME: TUBE RETAINERS

SHEET 7 OF 7
DRAWN BY: L. B. REED

DWG.#:22001

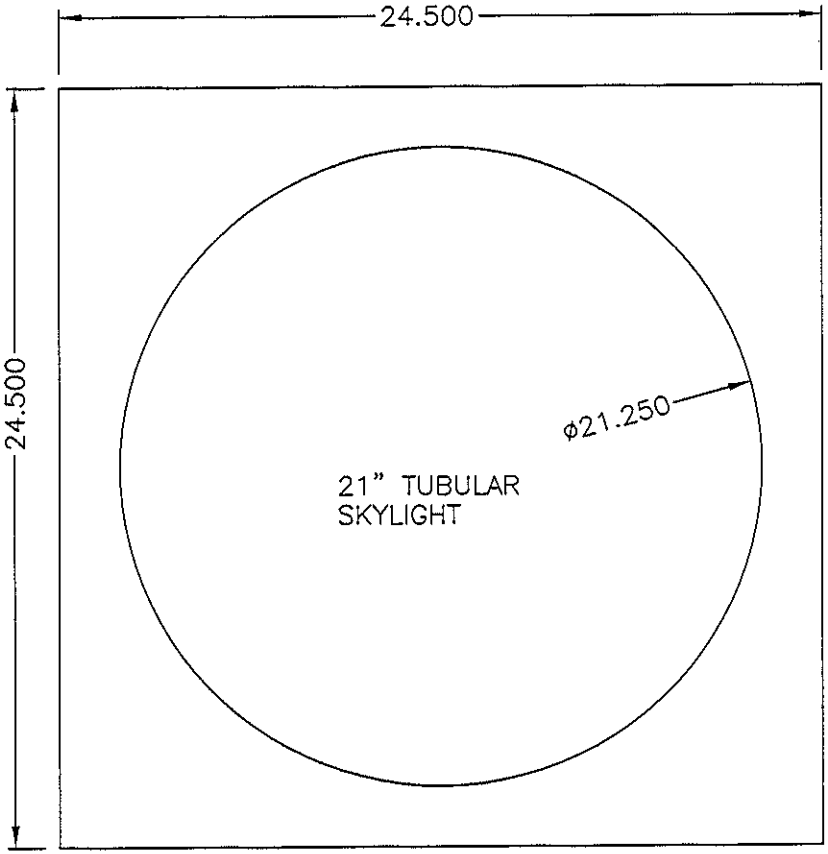

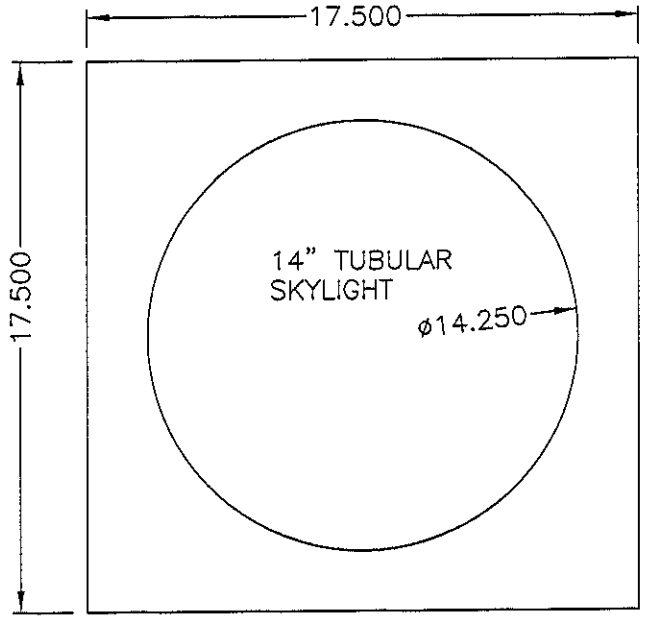

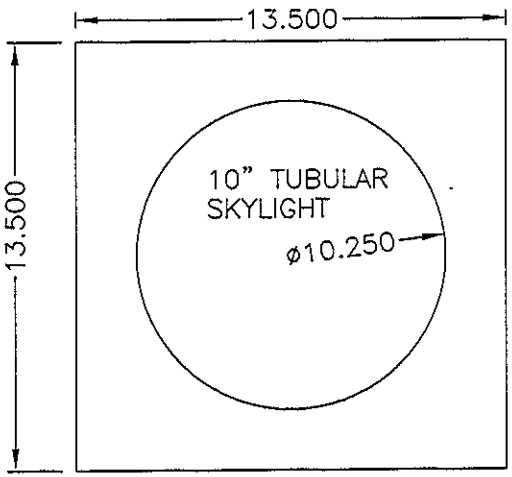

PRODUCT REVISED
as complying with the Florida
Building Code
Acceptance No 11-0601.05
Expiration Date 05/26/2018
By
Miami Dade Product Control

10/14/11

REVISION:		REVISION:		PRODUCT NAME: TUBLAR SKYLIGHTS	SUN-TEK MANUFACTURING, INC.
INI:	DATE:	INI:	DATE:	DATE: 10/14/2011 SCALE: DWG No. 22001	10303 GENERAL DRIVE ORLANDO, FL 32824