**MIAMI-DADE COUNTY**
**PRODUCT CONTROL SECTION**
11805 SW 26 Street, Room 208
Miami, Florida 33175-2474
T (786) 315-2590 F (786) 315-2599
**www.miamidade.gov/building/**

**BUILDING AND NEIGHBORHOOD COMPLIANCE DEPARTMENT (BNC)**
BOARD AND CODE ADMINISTRATION DIVISION

# NOTICE OF ACCEPTANCE (NOA)

**Lomanco, Inc.**
**2101 West main Street**
**Jacksonville, AR 72076**

## SCOPE:

This NOA is being issued under the applicable rules and regulations governing the use of construction materials. The documentation submitted has been reviewed and accepted by Miami-Dade County BNC - Product Control Section to be used in Miami Dade County and other areas where allowed by the Authority Having Jurisdiction (AHJ).

This NOA shall not be valid after the expiration date stated below. The Miami-Dade County Product Control Section (In Miami Dade County) and/or the AHJ (in areas other than Miami Dade County) reserve the right to have this product or material tested for quality assurance purposes. If this product or material fails to perform in the accepted manner, the manufacturer will incur the expense of such testing and the AHJ may immediately revoke, modify, or suspend the use of such product or material within their jurisdiction. BNC reserves the right to revoke this acceptance, if it is determined by Miami-Dade County Product Control Section that this product or material fails to meet the requirements of the applicable building code.
This product is approved as described herein, and has been designed to comply with the Florida Building Code including the High Velocity Hurricane Zone of the Florida Building Code.

**DESCRIPTION: VUR & LPR Ridgevents**

**LABELING:** Each unit shall bear a permanent label with the manufacturer's name or logo, city, state and following statement: "Miami-Dade County Product Control Approved", unless otherwise noted herein.

**RENEWAL** of this NOA shall be considered after a renewal application has been filed and there has been no change in the applicable building code negatively affecting the performance of this product.

**TERMINATION** of this NOA will occur after the expiration date or if there has been a revision or change in the materials, use, and/or manufacture of the product or process. Misuse of this NOA as an endorsement of any product, for sales, advertising or any other purposes shall automatically terminate this NOA. Failure to comply with any section of this NOA shall be cause for termination and removal of NOA.

**ADVERTISEMENT:** The NOA number preceded by the words Miami-Dade County, Florida, and followed by the expiration date may be displayed in advertising literature. If any portion of the NOA is displayed, then it shall be done in its entirety.

**INSPECTION:** A copy of this entire NOA shall be provided to the user by the manufacturer or its distributors and shall be available for inspection at the job site at the request of the Building Official.

This renews NOA# 06-0501.08 and consists of pages 1 through 4.
The submitted documentation was reviewed by Alex Tigera.

## ROOFING COMPONENT APPROVAL

**Category:** Roofing
**Sub-Category:** Ventilation
**Material:** Aluminum

## TRADE NAMES OF PRODUCTS MANUFACTURED OR LABELED BY APPLICANT:

| Product | Dimensions | Test Specification | Product Description |
|---|---|---|---|
| **VUR Ridgevents** | 1.75": height<br>9":width<br>10':length<br>0.025": Min. thickness | TAS 100(A) | Aluminum static louvered roof ridge ventilation system. |
| **LPR Ridgevents** | 2": height<br>11":width<br>8'and 10':length<br>0.025": Min. thickness | TAS 100(A) | Aluminum static louvered roof ridge ventilation system. |

## MANUFACTURING LOCATION

1. Jacksonville, AR

## EVIDENCE SUBMITTED:

| Test Agency | Test Identifier | Description | Date |
|---|---|---|---|
| PRI Asphalt Technologies | LOM-008-02-01<br>LOM-009-02-01 | TAS100(A) | 04/05/06 |

## APPROVED ASSEMBLIES:

**Trade names:** VUR & LPR Ridgevent

**System Type C:** Mechanical attachment of static ridge vent over composite shingles.

**Cutout:** Refer to manufacturer's published literature

**Installation:** Install end plug on the end of the vent sealed with 100% silicone sealant. VUR & LPR Ridgevent shall be 6" longer than ventilation slot as to provide a base for the end plug.

Apply ¼" wide bead of 100% silicone sealant caulk to the bottom flange of the VUR & LPR Ridgevent sections close to where roof hole will be after vent is installed. Align end of first section on the end marks and the bottom of the nailing flange on the chalk line (4" down on both sides of the ridge peak for VUR vent; 5¼" down on both sides of the ridge peak for LPR vent). Nail the VUR & LPR Ridgevent in place using 11 gauge 2" galvanized smooth shank roofing nails through the factory formed holes, with the first nail 1½" to 2" form the vent end. All nail heads and vent section joints shall be sealed with 100% silicone sealant.

Install Hurricane Straps over each end of ridge vent, all connections between sections and at 3' intervals over the remainder of the vent using four 1½" galvanized ring shank-roofing nails per strap.

**Ventilation Calculations:** Refer to manufacturer's published literature

**Minimum Slope:** 3:12

## GENERAL LIMITATIONS:

1. Refer to applicable Building Code for required ventilation.
2. VUR & LPR Ridgevent shall comply with all applicable building codes.
3. VUR & LPR Ridgevent shall not be installed on roof mean heights greater than 33 feet.
4. VUR & LPR Ridgevent shall comply with 1517.6 of the Florida Building Code (FBC)
5. All products listed herein shall have a quality assurance audit in accordance with the Florida Building Code and Rule 9B-72 of the Florida Administrative Code.

## DETAILS

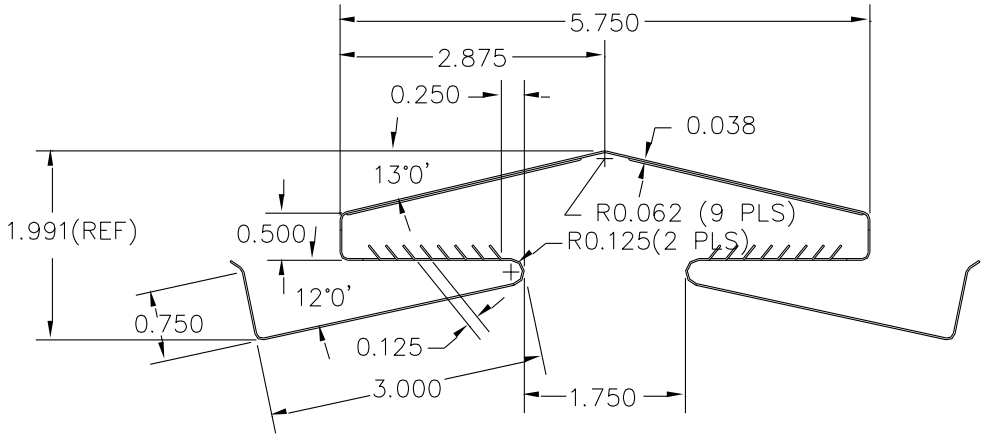


**VUR Ridgevent**

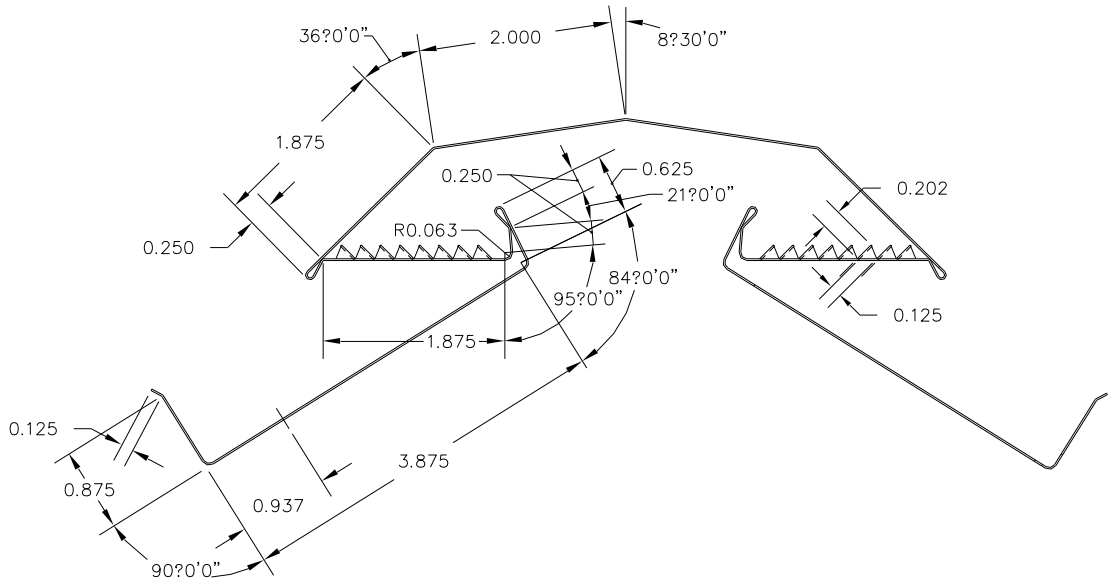


**LPR Ridgevent**

**END OF THIS ACCEPTANCE**