MIAMI-DADE COUNTY
BUILDING AND NEIGHBORHOOD COMPLIANCE DEPARTMENT (BNC)
BOARD AND CODE ADMINISTRATION DIVISION

MIAMI-DADE COUNTY
PRODUCT CONTROL SECTION
11805 SW 26 Street, Room 208
Miami, Florida 33175-2474
T (786) 315-2590 F (786) 315-2599
www.miamidade.gov/building

# NOTICE OF ACCEPTANCE (NOA)

**Aluminum World, Inc.**
**4401 East 10th Avenue**
**Hialeah, Florida 33013**

**SCOPE:**
This NOA is being issued under the applicable rules and regulations governing the use of construction materials. The documentation submitted has been reviewed and accepted by Miami-Dade County BNC-Product Control Section to be used in Miami Dade County and other areas where allowed by the Authority Having Jurisdiction (AHJ).

This NOA shall not be valid after the expiration date stated below. The Miami-Dade County Product Control Division (In Miami Dade County) and/or the AHJ (in areas other than Miami Dade County) reserve the right to have this product or material tested for quality assurance purposes. If this product or material fails to perform in the accepted manner, the manufacturer will incur the expense of such testing and the AHJ may immediately revoke, modify, or suspend the use of such product or material within their jurisdiction. BNC reserves the right to revoke this acceptance, if it is determined by Miami-Dade County Product Control Section that this product or material fails to meet the requirements of the applicable building code.

This product is approved as described herein, and has been designed to comply with the High Velocity Hurricane Zone of the Florida Building Code.

**DESCRIPTION: "Storm Guard" 0.0384" (min.) Galvanized Steel Storm Panels Shutter**

**APPROVAL DOCUMENT:** Drawing No. **11-058**, titled " 0.0384" Galvanized Steel Storm Panel-Storm Guard", sheets 1 through 7 of 7, prepared by Tilteco, Inc., dated May 31, 2011, last revision #1 dated May 31, 2011, signed and sealed by Walter A. Tillit Jr., P.E., bearing the Miami-Dade County Product Control Revision stamp with the Notice of Acceptance number and the expiration date by the Miami-Dade County Product Control Section.

**MISSILE IMPACT RATING: Large and Small Missile Impact Resistant**

**LABELING:** Each panel shall bear a permanent label with the manufacturer's name or logo, city, state, the following statement: "Miami-Dade County Product Control Approved", and NOA number, per TAS-201, TAS-202, and TAS-203, unless otherwise noted herein.

**RENEWAL** of this NOA shall be considered after a renewal application has been filed and there has been no change in the applicable building code negatively affecting the performance of this product.

**TERMINATION** of this NOA will occur after the expiration date or if there has been a revision or change in the materials, use, and/or manufacture of the product or process. Misuse of this NOA as an endorsement of any product, for sales, advertising or any other purposes shall automatically terminate this NOA. Failure to comply with any section of this NOA shall be cause for termination and removal of NOA.

**ADVERTISEMENT:** The NOA number preceded by the words Miami-Dade County, Florida, and followed by the expiration date may be displayed in advertising literature. If any portion of the NOA is displayed, then it shall be done in its entirety.

**INSPECTION:** A copy of this entire NOA shall be provided to the user by the manufacturer or its distributors and shall be available for inspection at the job site at the request of the Building Official.
This NOA **revises & renews NOA # 06-0410.03** and consists of this page 1, evidence submitted pages E-1, E-2, E-3, & E-4 as well as approval document mentioned above.
The submitted documentation was reviewed by **Helmy A. Makar, P.E., M.S.**

MIAMI-DADE COUNTY APPROVED

Helmy A. Makar
07/14/2011

**NOA No. 11-0602.07**
**Expiration Date: 07/09/2012**
**Approval Date: 07/14/2011**

## NOTICE OF ACCEPTANCE: EVIDENCE SUBMITTED

**1. EVIDENCE SUBMITTED UNDER PREVIOUS APPROVAL #99-0304.05**

**A. DRAWINGS**

1. *Drawing prepared by Tilteco, Inc., titled "*20 Gage *Storm Panel - Storm Guard", Drawing No. 99-70, dated February 24, 1999, sheets 1 through 7 of 7, signed and sealed by Walter A. Tillit, Jr., P.E.*

**B. TESTS**

1. *None. (Tests originally in file #98-0303.05)*

**C. CALCULATIONS**

1. *None. (Calculations originally in file #98-0303.05)*

**D. MATERIAL CERTIFICATIONS**

1. *None. (Material certifications originally in file #98-0303.05)*

**E. OTHER**

1. *An official corporate resolution issued by Mr. Scott Shaver, from Florida Metal Industries, Inc., 02/19/99, rescinding any claim to the N.O.A. #98-0303.05.*
2. *Letter issued by Walter T. Tillit, Jr., P.E., March 26, 1999, stating that all documents are unchanged copies of Florida Metal Industries, Inc. "Storm Panel - Storm Guard" submittals, Acceptance #98-0303.05.*

**F. NOTE**

1. *This approval, the same as Approval #98-0303.05, is issued to change the name from Florida Metal Industries, Inc. to Dynamic Window Shutters, Inc.*

**2. EVIDENCE SUBMITTED UNDER PREVIOUS APPROVAL #01-0516.01**

**A. DRAWINGS**

1. *Drawing No. 99-70, prepared by Tilteco, Inc., titled "*20 Gage *Storm Panel - Storm Guard", dated February 24, 1999, last revision #2 dated July 11, 2001, sheets 1 through 7 of 7, signed and sealed by Walter A. Tillit, Jr., P.E.*

**B. TESTS**

1. *None. (Tests originally in file #98-0303.05)*

**C. CALCULATIONS**

1. *None. (Calculations originally in file #98-0303.05)*

**D. MATERIAL CERTIFICATIONS**

1. *None. (Material certifications originally in file #98-0303.05)*

**Helmy A. Makar, P.E., M.S.**
**BNC, Product Control Unit Supervisor**
**NOA No. 11-0602.07**
**Expiration Date: 07/09/2012**
**Approval Date: 07/14/2011**

## NOTICE OF ACCEPTANCE: EVIDENCE SUBMITTED

**3 EVIDENCE SUBMITTED UNDER PREVIOUS APPROVAL #01-1029.02**

**A. DRAWINGS**

1. *Drawing No. 01-280, titled "20 Gage Storm Panel - Storm Guard", prepared by Tilteco, Inc., dated October 08, 2001, sheets 1 through 7 of 7, signed and sealed by Walter A. Tillit, Jr., P.E.*

**B. TESTS**

1. *None. (Tests originally in file #98-0303.05)*

**C. CALCULATIONS**

1. *None. (Calculations originally in file #98-0303.05)*

**D. MATERIAL CERTIFICATIONS**

1. *None. (Material certifications originally in file #98-0303.05)*

**E. OTHER**

1. *An official corporate resolution issued by Mr. Rafael Rosado and Leocadia E. Rosado, from Dynamic Window Shutters, Inc., dated October 01, 2001, rescinding any claim to the Notice of Acceptance #01-0516.01.*
2. *Letter issued, signed, and sealed by Walter T. Tillit, Jr., P.E., dated October 08, 2001, stating that drawing #01-280 prepared for Aluminum World, Inc. is engineering wise completely identical to Dynamic Window Shutters, Inc. drawing #99-70.*
3. *Bill of Sale from Dynamic Window Shutters, Inc. to Aluminum World, Inc., dated October 01, 2001.*

**F. NOTE**

1. *Approval #01-0516.01, the same as Approval #98-0303.05, is issued to change the name from Florida Metal Industries, Inc. to Dynamic Window Shutters, Inc.*
2. *This approval, the same as Approval #01-0516.01, is issued to change the name from Dynamic Window Shutters, Inc. to Aluminum World, Inc.*

**4. EVIDENCE SUBMITTED UNDER PREVIOUS APPROVAL #03-0206.06**

**A. DRAWINGS**

1. *Drawing No. **02-575**, titled " 20 gage Storm Panel – Storm Guard ", sheets 1 through 7 of 7, prepared by Tilteco, Inc., dated December 11, 2002, last revision #1 dated December 11, 2002 signed and sealed Walter A. Tillit, Jr., P.E.*

**B. TESTS**

1. *None.*

**Helmy A. Makar, P.E., M.S.**
**BNC, Product Control Unit Supervisor**
**NOA No. 11-0602.07**
**Expiration Date: 07/09/2012**
**Approval Date: 07/14/2011**

## NOTICE OF ACCEPTANCE: EVIDENCE SUBMITTED

**C. CALCULATIONS**

*1. None.*

**D. MATERIAL CERTIFICATIONS**

*1. None.*

**E. STATEMENTS**

*1. Letter issued by Mr. Walter A. Tillit, Jr., P.E., dated December 17, 2002, indicating that the only change is update General Note numbers 1 & 10 to reference the Florida Building Code and ASCE 7-98.*

**5. EVIDENCE SUBMITTED UNDER PREVIOUS APPROVAL #05-0610.01**

**A. DRAWINGS**

*1. Drawing No. **05-109**, titled " 0.0384" Galvanized Steel Storm Panel – Storm Guard ", sheets 1 through 7 of 7, prepared by Tilteco, Inc., dated May 06, 2005, last revision #2 dated July 08, 2005, signed and sealed Walter A. Tillit, Jr., P.E.*

**B. TESTS**

*1. None.*

**C. CALCULATIONS**

*1. Anchor analysis titled " 2004 Florida Building Code High Velocity Hurricane Zone Revision of Miami-Dade County Product Approval for 0.0384" Galvanized Steel Storm Panel – Storm Guard ", dated May 26, 2005, sheets 1 through 38 of 38, signed and sealed by Walter A. Tillit Jr., P.E.*

**D. QUALITY ASSURANCE**

*1. By Miami-Dade County Building Code Compliance Office.*

**E. MATERIAL CERTIFICATIONS**

*1. None.*

**6. EVIDENCE SUBMITTED UNDER PREVIOUS APPROVAL # 06-0410.03**

**A. DRAWINGS**

*1. None.*

**B. TESTS**

*1. None.*

**Helmy A. Makar, P.E., M.S.**
**BNC, Product Control Unit Supervisor**
**NOA No. 11-0602.07**
**Expiration Date: 07/09/2012**
**Approval Date: 07/14/2011**

## NOTICE OF ACCEPTANCE: EVIDENCE SUBMITTED

**C. CALCULATIONS**

*1. None.*

**D. QUALITY ASSURANCE**

*1. By Miami-Dade County Building Code Compliance Office.*

**E. MATERIAL CERTIFICATIONS**

*1. None.*

**7. NEW EVIDENCE SUBMITTED**

**A. DRAWINGS**

*1. Drawing No. **11-058**, titled " 0.0384" Galvanized Steel Storm Panel-Storm Guard", sheets 1 through 7 of 7, prepared by Tilteco, Inc., dated May 31, 2011, last revision #1 dated May 31, 2011, signed and sealed by Walter A. Tillit Jr., P.E.*

**B. TESTS**

*1. None.*

**C. CALCULATIONS**

*1. None.*

**D. QUALITY ASSURANCE**

*1. By Miami-Dade County Building and Neighborhood Compliance Department.*

**E. MATERIAL CERTIFICATIONS**

*1. None.*

Helmy A. Makar

**Helmy A. Makar, P.E., M.S.**
**BNC, Product Control Unit Supervisor**
**NOA No. 11-0602.07**
**Expiration Date: 07/09/2012**
**Approval Date: 07/14/2011**

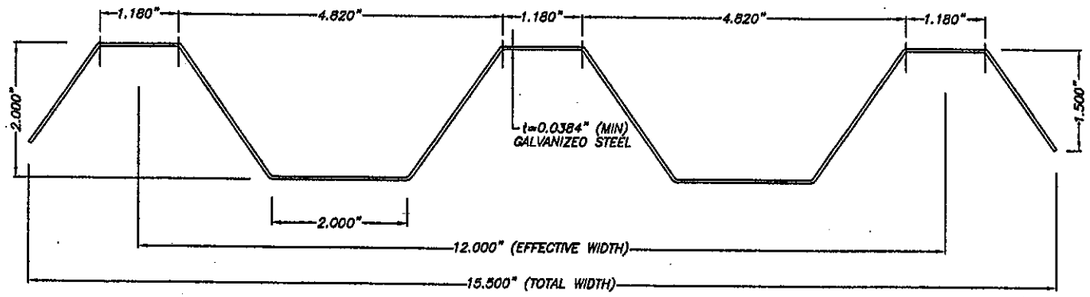


① PANEL

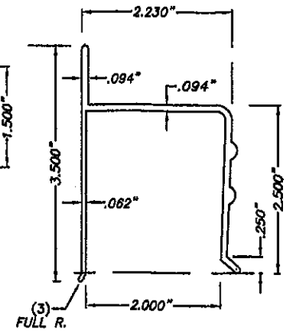


② "h" HEADER

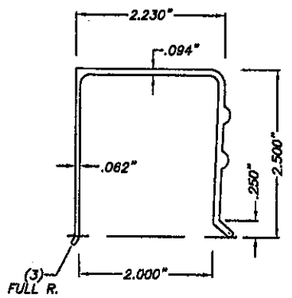


③ "U" HEADER

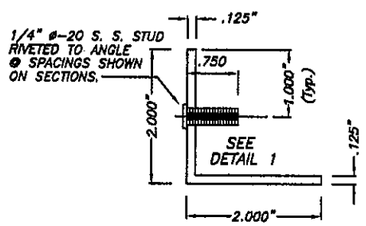


④ STUDDED ANGLE

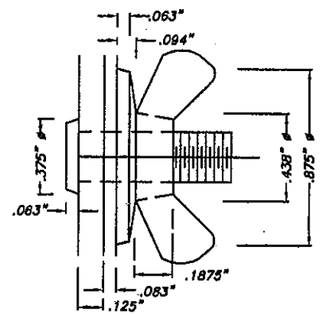


DETAIL 1: STUD W/ WING NUT

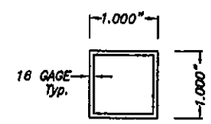


⑤ STEEL TUBE REINFORCEMENT

ASTM A-653 W/
FY = 33 ksi

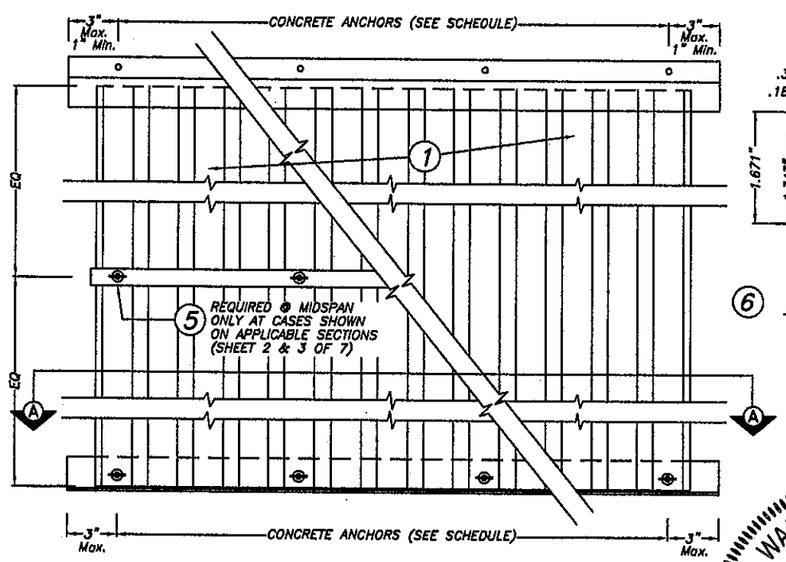


STORM PANEL TYPICAL ELEVATION

SEE SHEET 3 OF 7 FOR REINFORCING DETAILS W/ ⑤ .

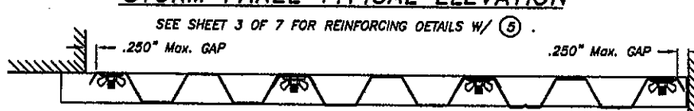


SECTION A-A

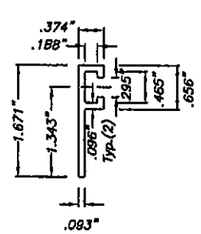


⑥ "F" TRACK

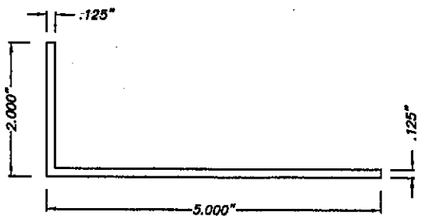


⑦ 2"x5" (Max.)x0.125" ANGLE

6063-T5 Alum. ALLOY

COMPONENTS

## GENERAL NOTES:

1. STORM PANEL SHOWN ON THIS PRODUCT APPROVAL DOCUMENT (P.A.D.) HAS BEEN VERIFIED FOR CODE COMPLIANCE IN ACCORDANCE WITH THE 2007 EDITION OF THE FLORIDA BUILDING CODE.
DESIGN WIND LOADS SHALL BE DETERMINED AS PER SECTION 1620 OF THE ABOVE MENTIONED CODE. IN ORDER TO VERIFY THAT ANCHORS ON THIS P.A.D., AS TESTED, WERE NOT OVER STRESSED, A 33% INCREASE IN ALLOWABLE LOADS FOR WIND LOADS WAS NOT USED IN THEIR ANALYSIS. HOWEVER, FOR LAG SCREWS INTO WOOD, A 1.60 WIND LOAD DURATION FACTOR WAS USED TO CALCULATE SCREWS SPACINGS.
STORM PANEL'S ADEQUACY FOR IMPACT AND FATIGUE RESISTANCE HAS BEEN VERIFIED IN ACCORDANCE WITH SECTION 1626 OF THE ABOVE MENTIONED CODE AS PER HETI REPORT # HETI-99-831 PER TAS-201, TAS-202 & TAS-203 PROTOCOLS.

2. ALL STEEL SHEET METAL PANELS SHALL HAVE STRUCTURAL QUALITY ASTM A653, GRADE 50, G-90 GALVANIZED STEEL DESIGNATION W/Fy=56.6 ksi (AFTER ROLLED).

3. ALL ALUMINUM EXTRUSIONS SHALL BE 6063-T6 ALLOY UNLESS OTHERWISE NOTED.

4. ALL SCREWS TO BE STAINLESS STEEL 304 OR 316 SERIES W/50 ksi YIELD POINT AND 90 ksi TENSILE STRENGTH OR CORROSION RESISTANT COATED CARBON STEEL AS PER DIN 50018 AND SECTION 2411.3.3.4 OF THE FLORIDA BUILDING CODE.

5. BOLTS TO BE ASTM A-307 GALVANIZED OR AISI 304 STAINLESS STEEL, WITH 36 ksi MINIMUM YIELD POINT.

6. ANCHORS TO WALL SHALL BE AS FOLLOWS: (UNLESS OTHERWISE NOTED)
(A) TO EXISTING POURED CONCRETE:
- 1/4" ø TAPCON ANCHORS, AS MANUFACTURED BY I.T.W. BUILDEX.
- 1/4" ø x 7/8" CALK-IN ANCHORS, AS MANUFACTURED BY POWERS FASTENERS, INC.

NOTES:
A.1) MINIMUM EMBEDMENT OF TAPCON ANCHORS INTO CONCRETE SHALL BE 1 3/4".
A.2) 1/4" ø x 7/8" CALK-IN ANCHORS SHALL BE ENTIRELY EMBEDDED INTO THE POURED CONCRETE. NO EMBEDMENT INTO STUCCO SHALL BE PERMITTED.
1/4" ø-20 SCREWS USED SHALL BE 1 1/2" LONG MINIMUM SHOULD STUCCO EXIST.
A.3) IN CASE THAT PRECAST STONE, PRECAST CONCRETE PANELS, OR PAVERS BE FOUND ON THE EXISTING WALL OR FLOOR, ANCHORS SHALL BE LONG ENOUGH TO REACH THE MAIN STRUCTURE BEHIND SUCH PANELS,. ANCHORAGE SHALL BE 1 3/4" MINIMUM FOR ANCHORS MENTIONED IN A.1), & 7/8" FOR ANCHORS MENTIONED IN A.2).

(B) TO EXISTING CONCRETE BLOCK WALL:
- 1/4" ø TAPCON ANCHORS, AS MANUFACTURED BY I.T.W. BUILDEX.
- 1/4" ø x 7/8" CALK-IN ANCHORS AS MANUFACTURED BY POWERS FASTENERS, INC.

NOTES:
B.1) MINIMUM EMBEDMENT OF TAPCON ANCHORS, INTO THE CONCRETE BLOCK UNIT SHALL BE 1 1/4".
B.2) 1/4" ø x 7/8" CALK-IN ANCHORS SHALL BE ENTIRELY EMBEDDED INTO THE CONCRETE BLOCK UNIT. NO EMBEDMENT INTO STUCCO SHALL BE PERMITTED.
1/4" ø-20 SCREWS USED SHALL BE 1 1/2" LONG MINIMUM SHOULD STUCCO EXIST, AND 1" MINIMUM FOR WALLS WITH NO STUCCO.
B.3) IN CASE THAT PRECAST STONE OR PRECAST CONCRETE PANELS BE FOUND ON THE EXISTING WALL, ANCHORS SHALL BE LONG ENOUGH TO REACH THE MAIN STRUCTURE BEHIND SUCH PANELS. ANCHORAGE SHALL BE 1 1/4" MINIMUM FOR ANCHORS MENTIONED IN B.1), & 7/8" FOR ANCHORS MENTIONED IN B.2).

(C) ANCHORS SHALL BE INSTALLED FOLLOWING ALL OF THE RECOMMENDATIONS AND SPECIFICATIONS OF THE ANCHOR'S MANUFACTURER.

7. PANELS MAY ALSO BE INSTALLED HORIZONTALLY FOLLOWING INSTALLATION DETAILS SHOWN ON SECTIONS 2, 2A, 3 & 6 (SHEET 2 & 3 OF 7).

8. EACH PANEL SHALL HAVE A LEGIBLE AND READILY VISIBLE MARKING INSTRUCTING OWNER OR TENANT TO SECURE PANELS WITH APPLICABLE REINFORCEMENT DURING PERIODS OF HURRICANE WARNING.

9. IT SHALL BE THE RESPONSIBILITY OF THE CONTRACTOR TO VERIFY THE SOUNDNESS OF THE STRUCTURE WHERE SHUTTER IS TO BE ATTACHED TO INSURE PROPER ANCHORAGE. THIS PANEL SHALL ONLY BE ATTACHED TO CONCRETE, BLOCK OR WOOD FRAMES BUILDINGS.

10. (A) THIS PRODUCT APPROVAL DOCUMENT (P.A.D.) PREPARED BY THIS ENGINEER IS GENERIC AND DOES NOT PROVIDE INFORMATION FOR A SITE SPECIFIC PROJECT; i.e. WHERE THE SITE CONDITIONS DEVIATE FROM THE P.A.D.

(B) CONTRACTOR TO BE RESPONSIBLE FOR THE SELECTION, PURCHASE AND INSTALLATION INCLUDING LIFE SAFETY OF THIS PRODUCT BASED ON THIS P.A.D. PROVIDED HE/SHE DOES NOT DEVIATE FROM THE CONDITIONS DETAILED ON THIS DOCUMENT. CONSTRUCTION SAFETY AT SITE IS THE CONTRACTOR'S RESPONSIBILITY.

(C) THIS PRODUCT APPROVAL DOCUMENT WILL BE CONSIDERED INVALID IF MODIFIED.

(D) SITE SPECIFIC PROJECTS SHALL BE PREPARED BY A FLORIDA REGISTERED ENGINEER OR ARCHITECT WHICH WILL BECOME THE ENGINEER OF RECORD (E.O.R.) FOR THE PROJECT AND WHO WILL BE RESPONSIBLE FOR THE PROPER USE OF THE P.A.D. ENGINEER OF RECORD, ACTING AS DELEGATED ENGINEER TO THE P.A.D. ENGINEER, SHALL SUBMIT TO THIS LATTER THE SITE SPECIFIC DRAWINGS FOR REVIEW.

(E) THIS P.A.D. SHALL BEAR THE DATE AND ORIGINAL SEAL AND SIGNATURE OF THE PROFESSIONAL ENGINEER THAT PREPARED IT.

11. SHUTTER MANUFACTURER'S LABEL SHALL BE PLACED AT BOTTOM OF EACH PANEL. LABEL SHALL READ AS FOLLOWS:
ALUMINUM WORLD, INC.
HIALEAH, FLORIDA
MIAMI-DADE COUNTY PRODUCT CONTROL APPROVED.

PRODUCT REVISED
as complying with the Florida
Building Code
Acceptance No 11-0602.07
Expiration Date 07/09/2012
By
Miami Dade Product Control

F.B.C. (High Velocity Hurricane Zone)

WALTER A. TILLIT JR.
LICENSE
No. 44167
STATE OF FLORIDA
PROFESSIONAL ENGINEER

CORPORATE SEAL *

* ATTN. BLDG. OFFICIALS DO NOT ACCEPT THIS DRAWING W/O ALUMINUM WORLD, INC. RAISED CORPORATE SEAL


TILTECO INC.
TILLIT TESTING & ENGINEERING COMPANY
6385 N.W. 36th. St. Ste. 305, VIRGINIA GARDENS, Fl. 33166
Phone : (305)871-1530 . Fax : (305)871-1531
EB-0006719
WALTER A. TILLIT Jr. P. E.
FLORIDA Lic. # 44167


0.0384" GALV. STEEL STORM PANEL-"STORM GUARD"


ALUMINUM WORLD, INC
4401 E. 10 AVENUE
HIALEAH, FL 33013.
TEL:(305) 825-1355 FAX:(305) 825-1356


| REV. No | DESCRIPTION | DATE | REV. No | DESCRIPTION | DATE |
|---|---|---|---|---|---|
| 1 | OLD 05-109 | 05/31/11 | 3 | - | - |
| 2 | | | 4 | - | - |

ORAWN BY: A.G.

05/31/11 DATE

11-058 DRAWING No

SHEET 1 OF 7

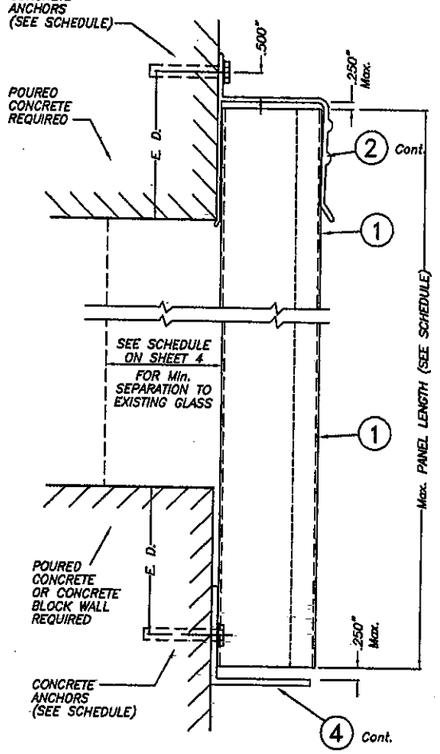


SECTION @ ANCHOR

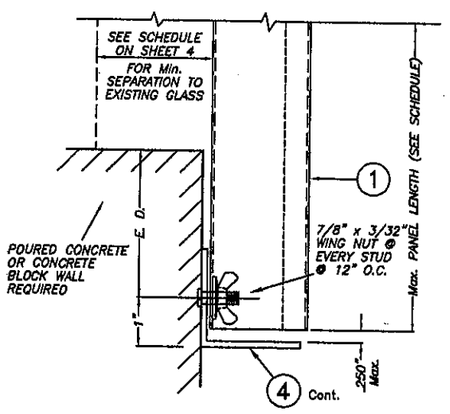


SECTION @ STUD

## WALL MOUNTING INSTALLATION – SECTION 1

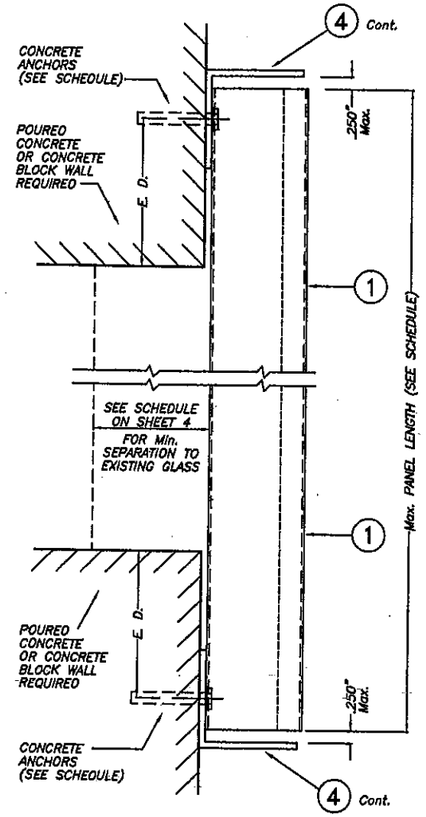


SECTION @ ANCHOR

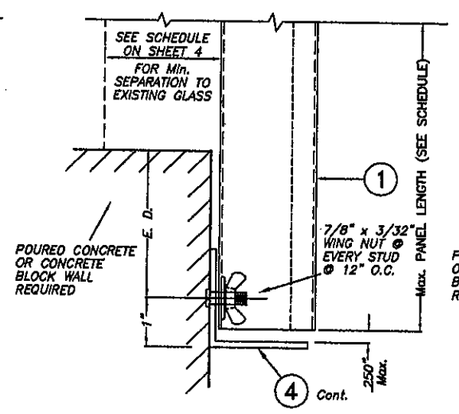


SECTION @ STUD

## WALL MOUNTING INSTALLATION – SECTION 2

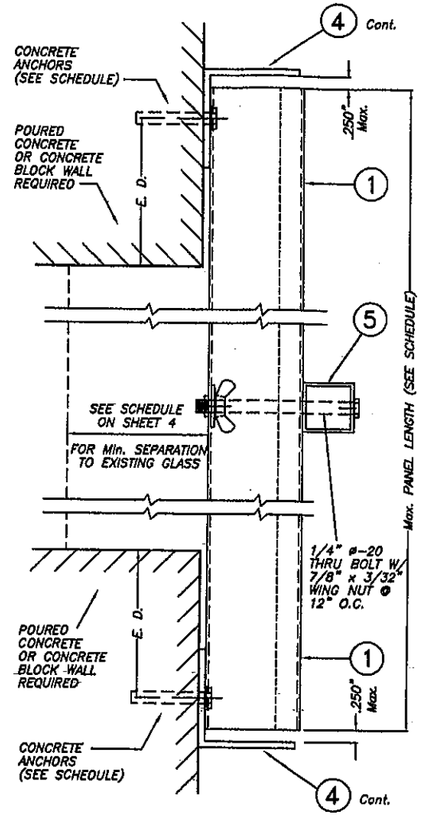


SECTION @ ANCHOR

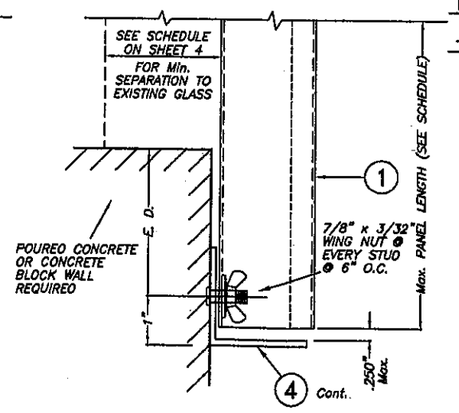


SECTION @ STUD

## WALL MOUNTING INSTALLATION – SECTION 2A

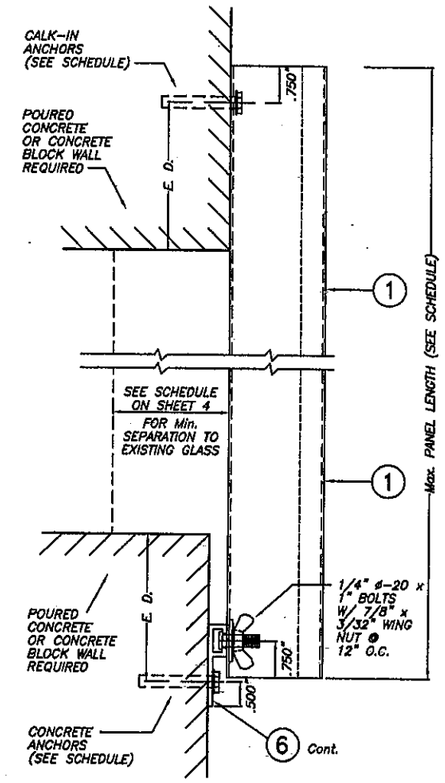


## WALL MOUNTING INSTALLATION – SECTION 3

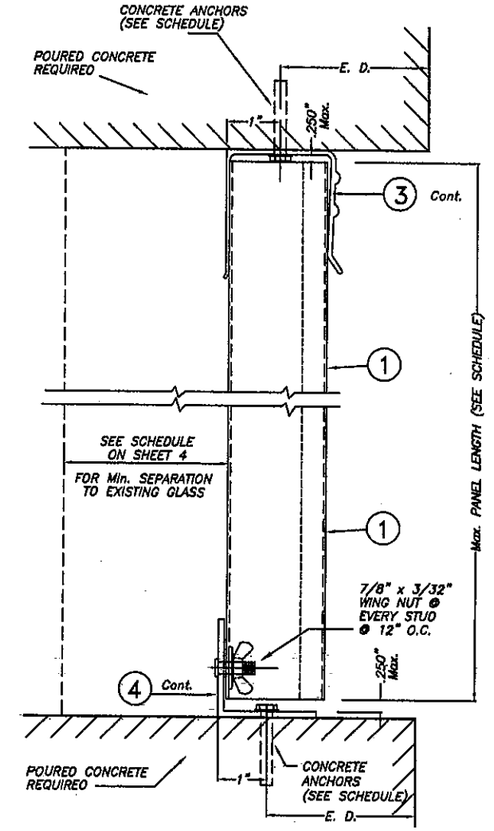


## CEILING & FLOOR MOUNTING INSTALLATION – SECTION 4

E. D. = EDGE DISTANCE (SEE SCHEDULE ON SHEET 5 OF 7)

PRODUCT REVISED
as complying with the Florida Building Code
Acceptance No 11-0602.01
Expiration Date 07/09/2012
By Mitimi Dade Product Control

WALTER A. TILLIT JR
LICENSE
No. 44167
STATE OF FLORIDA
PROFESSIONAL ENGINEER

NOTE FOR COMBINATION OF SECTIONS:

WALL/FLOOR/CEILING MOUNTING SECTIONS CAN BE COMBINED IN ANY WAY TO SUIT ANY INSTALLATION.

F.B.C. (High Velocity Hurricane Zone)

TILTECO INC.
TILLIT TESTING & ENGINEERING COMPANY
6355 N.W. 36th. St., Ste. 305, VIRGINIA GARDENS, FL 33166
Phone : (305)871-1530 . Fax : (305)871-1531
EB-0006719
WALTER A. TILLIT Jr. P. E.
FLORIDA Lic. # 44167

0.0384" GALV. STEEL STORM PANEL-"STORM GUARD"

ALUMINUM WORLD, INC
4401 E. 10 AVENUE
HIALEAH, FL 33013.
TEL:(305) 825-1355 FAX:(305) 825-1356

| REV. No | DESCRIPTION | DATE | REV. No | DESCRIPTION | DATE |
|---|---|---|---|---|---|
| 1 | OLD 03-109 | 05/31/11 | 3 | - | - |
| 2 | | | 4 | - | - |

DRAWN BY: A.G.
05/31/11 DATE
11-058 DRAWING No
SHEET 2 OF 7

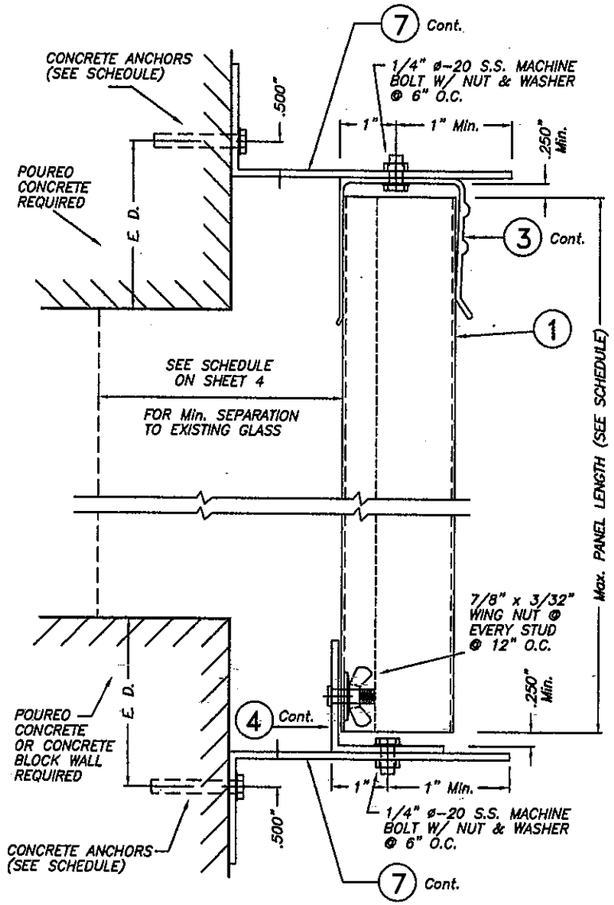


BUILD-OUT MOUNTING INSTALLATION – SECTION 5

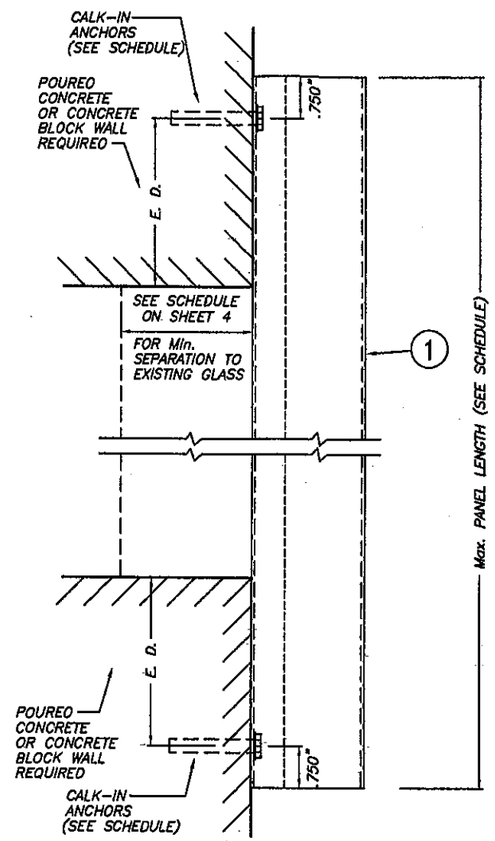


WALL MOUNTING INSTALLATION (DIRECT MOUNT) – SECTION 6

NOTE FOR COMBINATION OF SECTIONS:

WALL/FLOOR/CEILING MOUNTING SECTIONS CAN BE COMBINED IN ANY WAY TO SUIT ANY INSTALLATION.

E. D. = EDGE DISTANCE (SEE SCHEDULE ON SHEET 5 OF 7

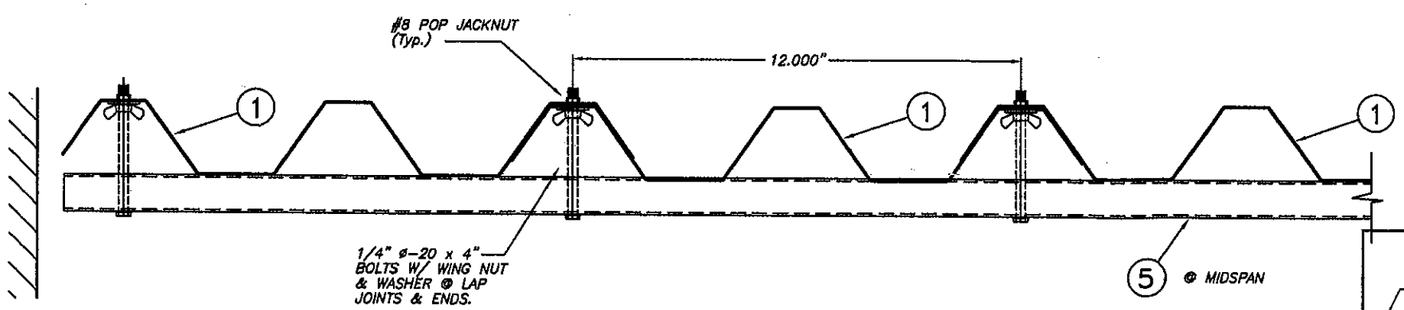


PANEL REINFORCING DETAIL W/ 5

WALTER A. TILLIT JR. LICENSE No. 44167 STATE OF FLORIDA PROFESSIONAL ENGINEER

PRODUCT REVISED
as complying with the Florida Building Code
Acceptance No 11-0602.07
Expiration Date 07/09/2012
By
Miami Dade Product Control

F.B.C. (High Velocity Hurricane Zone)

TILTECO INC.
TILLIT TESTING & ENGINEERING COMPANY
6355 N.W. 36th. St., Ste. 305, VIRGINIA GARDENS, FL 33166
Phone : (305)871-1630 . Fax : (305)871-1531
EB-0006719
WALTER A. TILLIT, Jr. P. E.
FLORIDA Lic. # 44167

0.0384" GALV. STEEL STORM PANEL-"STORM GUARD"

ALUMINUM WORLD, INC
4401 E. 10 AVENUE
HIALEAH, FL 33013.
TEL:(305) 825-1355 FAX:(305) 825-1356

| REV. No | DESCRIPTION | DATE | REV. No | DESCRIPTION | DATE |
|---|---|---|---|---|---|
| 1 | OLD 05-109 | 05/31/11 | 3 | – | – |
| 2 | | | 4 | – | – |

DRAWN BY: A.G.
05/31/11 DATE
11-058 DRAWING No
SHEET 3 OF 7

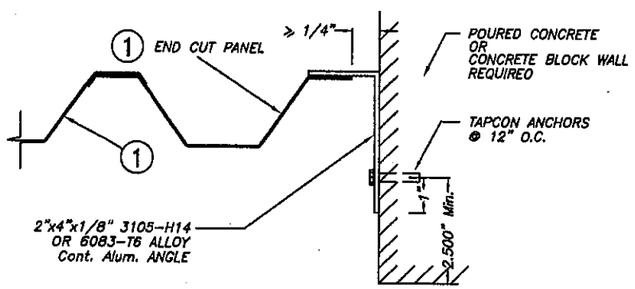


CASE A (Plan)

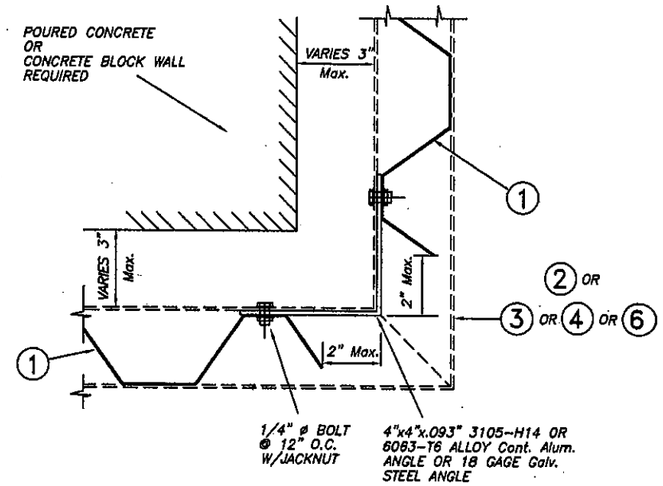


CASE B (Plan)

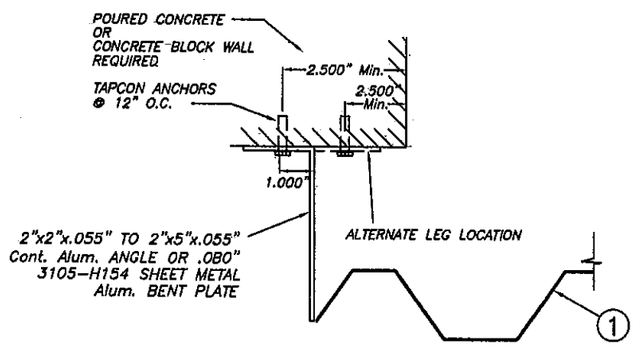


CASE C (Plan)

END CLOSURES DETAILS

## MAXIMUM DESIGN PRESSURE RATING "W" (p.s.f.) AND CORRESPONDING MAXIMUM PANEL LENGTH "L" SCHEDULE

| MAXIMUM DESIGN LOAD W (p.s.f.) | Max. PANEL LENGTH L (ft.) | MINIMUM SEPARATION TO GLASS | APPLICABLE TO SECTIONS # (SEE SHEET 2 & 3 OF 7) | PANEL REINFORCEMENT CONDITION |
|---|---|---|---|---|
| +60.0, -76.0 | 8'-10" | 3 1/8" | 1, 2, 3, 4 & 5 | UNBOLTED |
| +60.0, -72.0 | 9'-0" | 3" | 6 | UNBOLTED |
| +60.0, -78.0 | 8'-10" | 2 3/4" | 6 | UNBOLTED |
| +42.7, -53.3 | >8'-10" TO 12'-0" | 3" | 2A | BOLTED W/ BAR * |

* BOLTED W/ 1/4" ø-20 S.S. M.S. & WINGNUT AT OVERLAP & MIDLENGTH OF PANEL.

PRODUCT REVISED
as complying with the Florida
Building Code
Acceptance No 11-0602.07
Expiration Date 07/09/2012
By [signature]
Miami Dade Product Control

WALTER A. TILLIT JR.
LICENSE
No. 44167
STATE OF FLORIDA
PROFESSIONAL ENGINEER

F.B.C. (High Velocity Hurricane Zone)


TILTECO INC.
TILLIT TESTING & ENGINEERING COMPANY
6355 N.W. 36th. St., Ste. 305, VIRGINIA GARDENS, Fl. 33166
Phone : (305)871-1530 . Fax : (305)871-1531
EB-0006719
WALTER A. TILLIT Jr. P. E.
FLORIDA Lic. # 44167


0.0384" GALV. STEEL STORM PANEL-"STORM GUARD"

ALUMINUM WORLD, INC
4401 E. 10 AVENUE
HIALEAH, FL 33013.
TEL:(305) 625-1355 FAX:(305) 625-1356

| REV. No | DESCRIPTION | DATE | REV. No | DESCRIPTION | DATE |
|---|---|---|---|---|---|
| 1 | OLD 05-109 | 05/31/11 | 3 | - | - |
| 2 | | | 4 | - | - |

DRAWN BY: A.G.
05/31/11 DATE
11-058 DRAWING No
SHEET 4 OF 7

## MAXIMUM DESIGN PRESSURE RATING "W" (p.s.f.) AND CORRESPONDING MAXIMUM ANCHOR SPACING SCHEDULE FOR INSTALLATIONS INTO CONCRETE AND C.B.S. STRUCTURES *

E. D. = EDGE DISTANCE

| MAXIMUM DESIGN LOAD W (p.s.f.) | MAXIMUM ANCHORS SPACING FOR E. D. = 3 1/2" ** | | | | APPLICABLE TO SECTIONS # & ANY COMBINATION OF THEM | MAXIMUM PANEL LENGTH "L" (ft.) |
|---|---|---|---|---|---|---|
| | TAPCONS | | CALK-IN | | | |
| | TO CONCRETE | TO MASONRY | TO CONCRETE | TO MASONRY | | |
| +60,-71.5 | N/A | N/A | 12" | 12" | 6 (TOP/BOTTOM) | 6'-1" OR LESS |
| +60,-71.5 | N/A | N/A | 12" | 6" | 6 (TOP/BOTTOM) | >6'-1" TO 8'-2" |
| +60,-72.0 | N/A | N/A | 6" | 6" | 6 (TOP/BOTTOM) | 9'-0" OR LESS |
| +60.0, -76.0 | 6" | N/A | 6" | N/A | 1 (TOP) | 8'-10" OR LESS |
| | 6" | 5 1/2" | 6" | 6" | 1 (BOTTOM) | |
| | 6" | 5 1/2" | 6" | 6" | 2 (TOP/BOTTOM) | |
| | N/A | N/A | 6" | 6" | 3 (TOP) | |
| | 6" | 5 1/2" | 6" | 6" | 3 (BOTTOM) | |
| | 8" | N/A | 7" | N/A | 4 (TOP) | |
| | 7" | N/A | 6 1/2" | N/A | 4 (BOTTOM) | |
| | 6" | N/A | 6" | N/A | 5 (TOP) | |
| | 6" | 5 1/2" | 6" | 6" | 5 (BOTTOM) | |
| | N/A | N/A | 6" | 6" | 6 (TOP/BOTTOM) | |
| +42.7, -53.3 | 6" | 5 1/2" | 6" | 6" | 2A (TOP/BOTTOM) | >8'-10" TO 12'-0" |

* SEE SHEET 6 & 7 OF 7 FOR ANCHORS TYPE & SPACING FOR INSTALLATIONS INTO WOOD FRAME BUILDINGS.

** MAXIMUM ANCHOR SPACINGS ARE VALID FOR 3 1/2" EDGE DISTANCE. FOR E. D. LESS THAN 3 1/2", REDUCE ANCHOR SPACING BY MULTIPLYING SPACINGS SHOWN ON SCHEDULE BY THE FOLLOWING FACTORS. (NOTE : Min. E. D. FOR CALK-IN ANCHORS IS 2 1/2"). THIS OPERATION SHALL ONLY BE PERFORMED WHEN REQUIRED SPACING RESULTS INTO A MINIMUM OF 3"

| ACTUAL E. D. | FACTOR | |
|---|---|---|
| | TAPCON | CALK-IN |
| 3" | .86 | .75 |
| 2 1/2" | .71 | .50 |
| 2" | .50 | - |

PRODUCT REVISED
as complying with the Florida Building Code
Acceptance No 11-0602.07
Expiration Date 07/09/2012
By Helen A. Mach
Miami Dade Product Control

WALTER A. TILLIT JR. LICENSE No. 44167 STATE OF FLORIDA PROFESSIONAL ENGINEER

F.B.C. (High Velocity Hurricane Zone)

TILTECO INC.
TILLIT TESTING & ENGINEERING COMPANY
6355 N.W. 36th. St., Ste. 305, VIRGINIA GARDENS, FL 33166
Phone : (305)871-1530 . Fax : (305)871-1531
EB-0006719
WALTER A. TILLIT Jr. P. E.
FLORIDA Lic. # 44167

0.0384" GALV. STEEL STORM PANEL-"STORM GUARD"

ALUMINUM WORLD, INC
4401 E. 10 AVENUE
HIALEAH, FL 33013.
TEL:(305) 825-1355 FAX:(305) 825-1356

| REV. No | DESCRIPTION | DATE | REV. No | DESCRIPTION | DATE |
|---|---|---|---|---|---|
| 1 | OLD 05-109 | 05/31/11 | 3 | - | - |
| 2 | | | 4 | - | - |

DRAWN BY: A.G.
05/31/11 DATE
11-058 DRAWING No
SHEET 5 OF 7

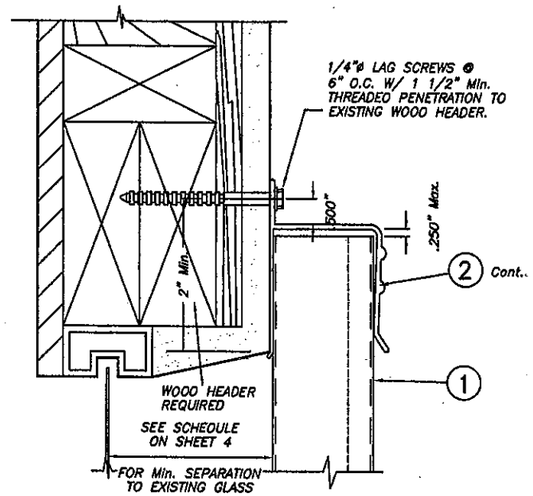


ALTERNATIVE 1

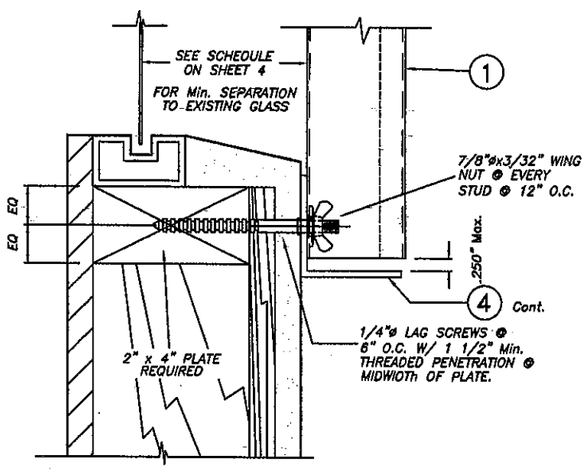


ALTERNATIVE 2

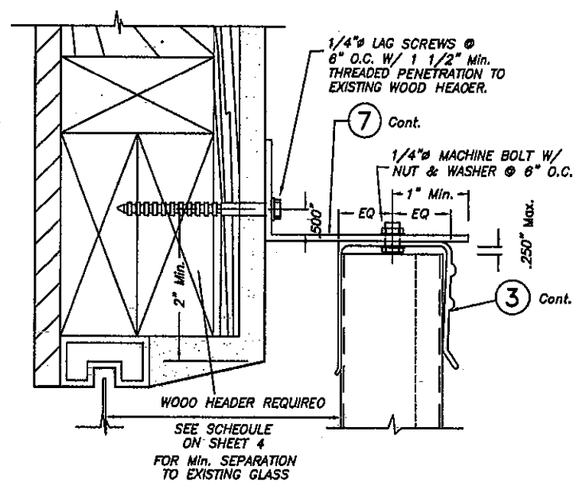


ALTERNATIVE 3

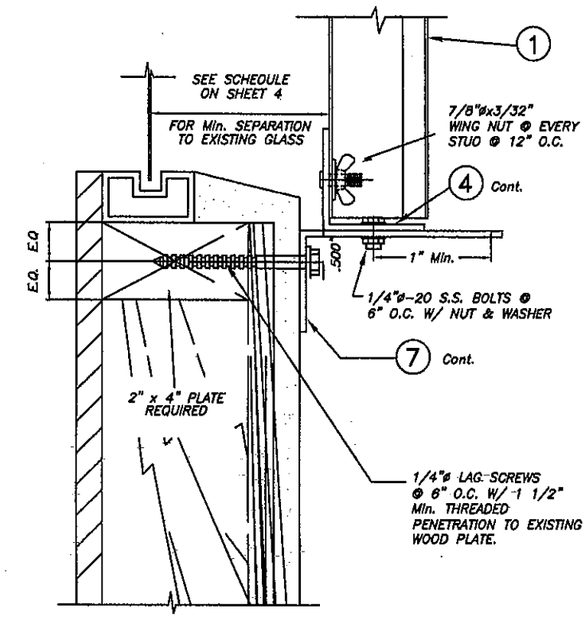


ALTERNATIVE 7

WALL MOUNTING INSTALLATION (OFFSET)

– SECTION A

PRODUCT REVISED
as complying with the Florida
Building Code
Acceptance No 11-0602.07
Expiration Date 07/09/2012
By
Miami Dade Product Control

NOTE FOR COMBINATION OF SECTIONS:

WALL MOUNTING SECTIONS CAN BE COMBINED IN ANY WAY TO SUIT ANY INSTALLATION.

NOTES:

1. INSTALLATIONS ARE ONLY VALID FOR DESIGN WIND LOADS UP TO +60.0, –76.0 p.s.f. AND PANEL'S LENGTHS UP TO 6'–10".

WALTER A. TILLIT JR.
LICENSE
No. 44167
STATE OF FLORIDA
PROFESSIONAL ENGINEER

F.B.C. (High Velocity Hurricane Zone)


TILTECO INC.
TILLIT TESTING & ENGINEERING COMPANY
6355 N.W. 36th. St., Ste. 305, VIRGINIA GARDENS, FL 33166
Phone : (305)871-1830 . Fax : (305)871-1831
EB-0006719
WALTER A. TILLIT Jr. P. E.
FLORIDA Lic. # 44167


0.0384" GALV. STEEL STORM PANEL–"STORM GUARD"

ALUMINUM WORLD, INC
4401 E. 10 AVENUE
HIALEAH, FL 33013.
TEL:(305) 825-1355 FAX:(305) 825-1356

| REV. No | DESCRIPTION | DATE | REV. No | DESCRIPTION | DATE |
|---|---|---|---|---|---|
| 1 | OLD 05-109 | 05/31/11 | 3 | – | – |
| 2 | | | 4 | – | – |

DRAWN BY: A.G.
05/31/11 DATE
11-058 DRAWING No
SHEET 6 OF 7

# INSTALLATION DETAILS ON EXISTING WOOD BUILDINGS

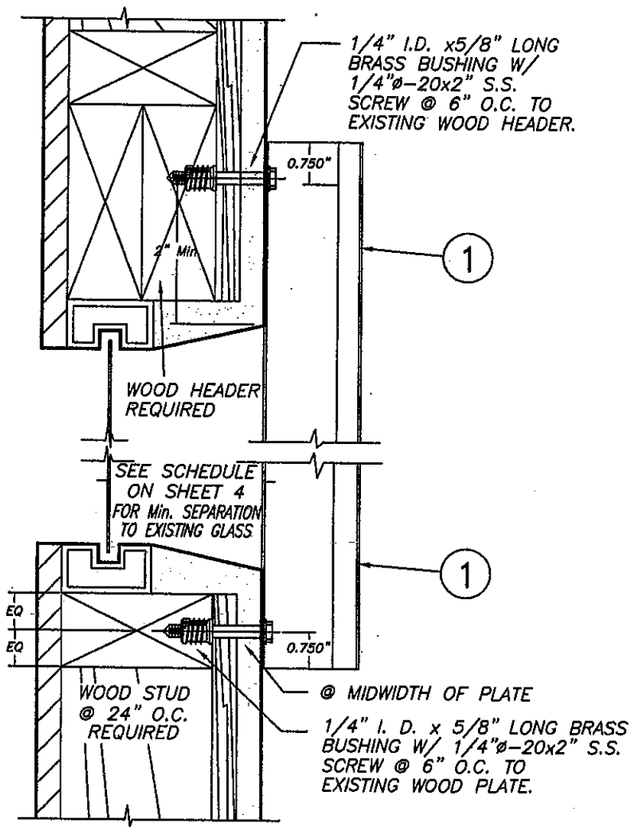


ALTERNATIVE 9

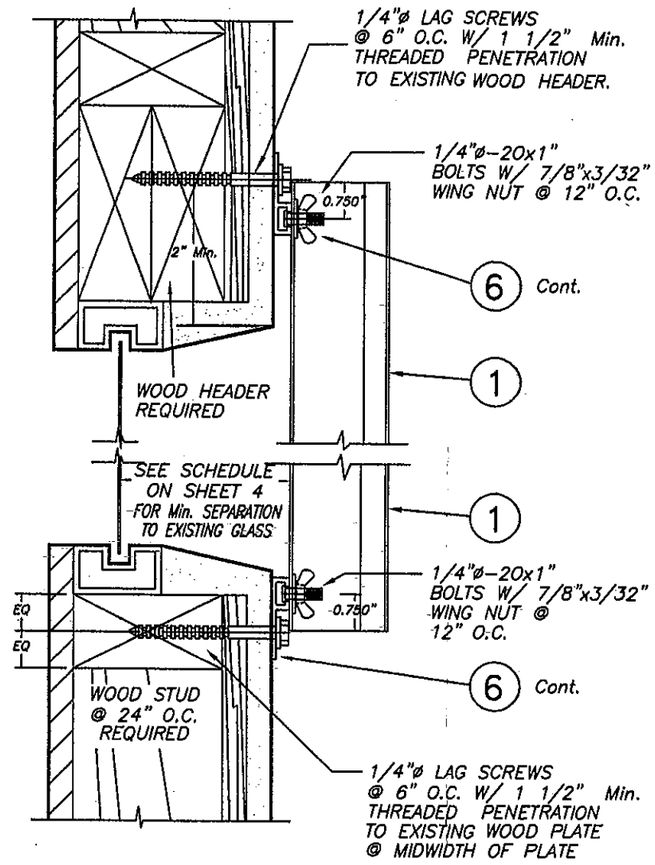


ALTERNATIVE 10

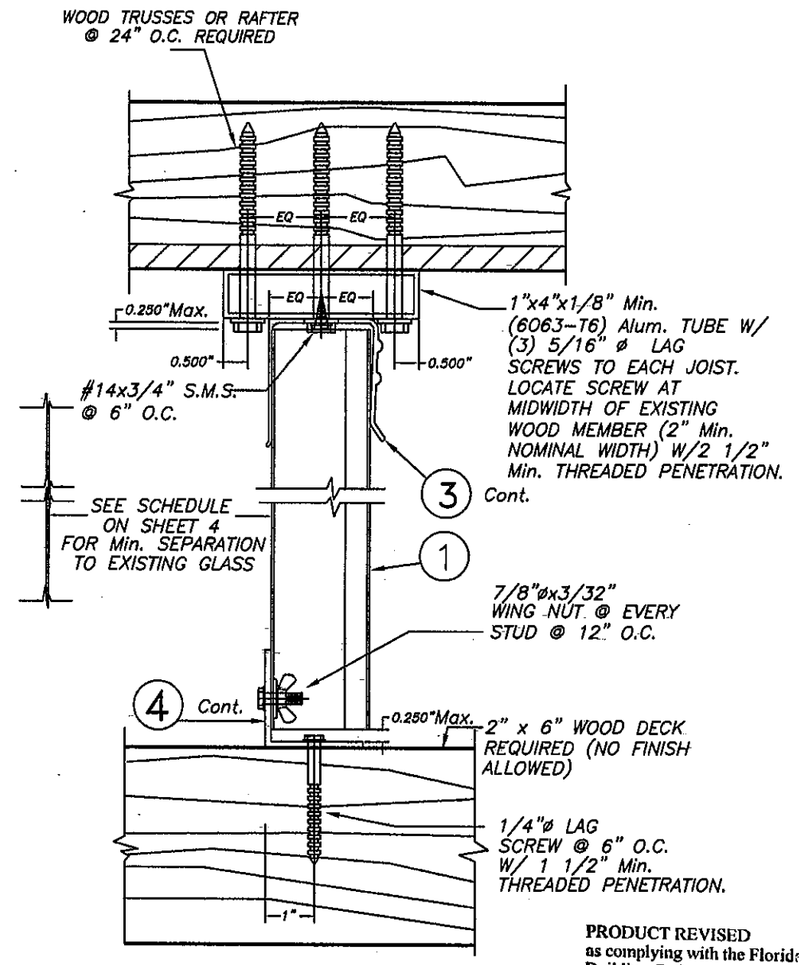


ALTERNATIVE 2

PRODUCT REVISED
as complying with the Florida Building Code
Acceptance No 11-0602.07
Expiration Date 07/09/2012
By [signature]
Miami Dade Product Control

CEILING & FLOOR MOUNTING INSTALLATION – SECTION B

**NOTES:**

1. INSTALLATIONS ARE ONLY VALID FOR DESIGN WIND LOADS up to +60.0, -76.0 p.s.f. AND PANEL'S LENGTHS UP TO 8'-10".

**NOTE FOR COMBINATION OF SECTIONS:**

FLOOR/ WALL/ CEILING MOUNTING SECTIONS CAN BE COMBINED IN ANY WAY TO SUIT ANY INSTALLATION.

WALTER A. TILLIT JR. LICENSE No. 44167 STATE OF FLORIDA PROFESSIONAL ENGINEER

F.B.C. (High Velocity Hurricane Zone)


TILTECO INC.
TILLIT TESTING & ENGINEERING COMPANY
6355 N.W. 36th. St., Ste. 305, VIRGINIA GARDENS, Fl. 33166
Phone : (305)871-1530 . Fax : (305)871-1531
EB-0006719
WALTER A. TILLIT Jr. P. E.
FLORIDA Lic. # 44167


0.0384" GALV. STEEL STORM PANEL-"STORM GUARD"


ALUMINUM WORLD, INC
4401 E. 10 AVENUE
HIALEAH, FL 33013.
TEL:(305) 825-1355 FAX:(305) 825-1356


| REV. No | DESCRIPTION | DATE | REV. No | DESCRIPTION | DATE |
|---|---|---|---|---|---|
| 1 | OLD 05-109 | 05/31/11 | 3 | – | – |
| 2 | | | 4 | – | – |

DRAWN BY: A.G.
05/31/11 DATE
11-058 DRAWING No
SHEET 7 OF 7