MIAMI-DADE COUNTY
BUILDING AND NEIGHBORHOOD COMPLIANCE DEPARTMENT (BNC)
BOARD AND CODE ADMINISTRATION DIVISION

MIAMI-DADE COUNTY
PRODUCT CONTROL SECTION
11805 SW 26 Street, Room 208
Miami, Florida 33175-2474
T (786) 315-2590 F (786) 315-2599
www.miamidade.gov/building/

NOTICE OF ACCEPTANCE (NOA)

PGT Industries
1070 Technology Drive
Nokomis, FL 34275

SCOPE:

This NOA is being issued under the applicable rules and regulations governing the use of construction materials. The documentation submitted has been reviewed and accepted by Miami-Dade County BNC - Product Control Section to be used in Miami Dade County and other areas where allowed by the Authority Having Jurisdiction (AHJ).

This NOA shall not be valid after the expiration date stated below. The Miami-Dade County Product Control Section (In Miami Dade County) and/or the AHJ (in areas other than Miami Dade County) reserve the right to have this product or material tested for quality assurance purposes. If this product or material fails to perform in the accepted manner, the manufacturer will incur the expense of such testing and the AHJ may immediately revoke, modify, or suspend the use of such product or material within their jurisdiction. BNC reserves the right to revoke this acceptance, if it is determined by Miami-Dade County Product Control Section that this product or material fails to meet the requirements of the applicable building code.

This product is approved as described herein, and has been designed to comply with the Florida Building Code, including the High Velocity Hurricane Zone.

DESCRIPTION: Series "SH-200" Aluminum Single Hung Window – N.I.

APPROVAL DOCUMENT: Drawing No. **MD-SH200-01**, titled "Single Hung Window Installation," sheets 1 through 8 of 8, dated 05/11/11, prepared by manufacturer, signed and sealed by Anthony Lynn Miller, P.E., bearing the Miami-Dade County Product Control Approval stamp with the Notice of Acceptance number and approval date by the Miami-Dade County Product Control Section.

MISSILE IMPACT RATING: None.

LABELING: Each unit shall bear a permanent label with the manufacturer's name or logo, city, state, model/series, and following statement: "Miami-Dade County Product Control Approved", unless otherwise noted herein.

RENEWAL of this NOA shall be considered after a renewal application has been filed and there has been no change in the applicable building code negatively affecting the performance of this product.

TERMINATION of this NOA will occur after the expiration date or if there has been a revision or change in the materials, use, and/or manufacture of the product or process. Misuse of this NOA as an endorsement of any product, for sales, advertising or any other purposes shall automatically terminate this NOA. Failure to comply with any section of this NOA shall be cause for termination and removal of NOA.

ADVERTISEMENT: The NOA number preceded by the words Miami-Dade County, Florida, and followed by the expiration date may be displayed in advertising literature. If any portion of the NOA is displayed, then it shall be done in its entirety.

INSPECTION: A copy of this entire NOA shall be provided to the user by the manufacturer or its distributors and shall be available for inspection at the job site at the request of the Building Official.

This NOA consists of this page 1 and evidence page E-1, as well as approval document mentioned above.

The submitted documentation was reviewed by **Manuel Perez, P.E.**

MIAMI-DADE COUNTY APPROVED

PGT Industries

NOTICE OF ACCEPTANCE: EVIDENCE SUBMITTED

A. DRAWINGS

1. Manufacturer's die drawings and sections.
2. Drawing No. **MD-SH200-01**, titled "Single Hung Window Installation" Sheets 1 through 8 of 8, dated 05/11/11, prepared by manufacturer, signed and sealed by Anthony Lynn Miller, P.E.

B. TESTS

1. Test reports on: 1) Air Infiltration Test, per FBC, TAS 202-94
   2) Uniform Static Air Pressure Test, Loading per FBC TAS 202-94
   3) Water Resistance Test, per FBC, TAS 202-94
   4) Forced Entry Test, per FBC 2411 3.2.1, TAS 202-94

   along with marked-up drawings and installation diagram of series SH-200 aluminum single hung window, prepared by Fenestration Testing Laboratory, Inc., Test Report No. **FTL-6479**, specimens 1 thru 26, dated 03/28/11, signed and sealed by Marlin D. Brinson, P.E.

C. CALCULATIONS:

1. Anchor verification calculations and structural analysis, complying with FBC-2007, dated 06/08/11 prepared, signed and sealed by Anthony Lynn Miller, P.E.
2. Glazing complies with ASTM E1300-04.

D. QUALITY ASSURANCE

1. Miami-Dade Building and Neighborhood Compliance Department (BNC).

E. MATERIAL CERTIFICATIONS

1. None.

F. STATEMENTS

1. Statement letter of conformance, dated 06/08/11, signed and sealed by Anthony Lynn Miller, P.E.
2. Statement letter of no financial interest, dated 06/08/11, signed and sealed by Anthony Lynn Miller, P.E.
3. Proposal No. **10–1066** issued by BNC, dated 11/09/10, signed by Ishaq Chanda, P. E.

G. OTHERS

1. None.

Manuel Perez, P.E.
Product Control Examiner
NOA No. 11-0614.01
Expiration Date: September 01, 2016
Approval Date: September 01, 2011

GENERAL NOTES: SERIES 200 NON-IMPACT SINGLE HUNG WINDOW

1) THIS PRODUCT HAS BEEN DESIGNED & TESTED TO COMPLY WITH THE REQUIREMENTS OF THE FLORIDA BUILDING CODE, 2007 EDITION INCLUDING THE HIGH VELOCITY HURRICANE ZONE (HVHZ).

2) SHUTTERS ARE REQUIRED WHEN USED IN WIND-BORNE DEBRIS REGIONS.

3) FOR MASONRY APPLICATIONS IN MIAMI-DADE COUNTY, USE ONLY MIAMI-DADE COUNTY APPROVED MASONRY ANCHORS. MATERIALS USED FOR ANCHOR EVALUATIONS WERE SOUTHERN PINE, ASTM C90 CONCRETE MASONRY UNITS AND CONCRETE WITH MIN. KSI PER ANCHOR TYPE, SEE TABLES 5 & 6, SHEET 4 & 5.

4) MASONRY ANCHORS MAY BE USED INTO WOOD AS PER TABLE 5, SHEET 4. ALL WOOD BUCKS LESS THAN 1-1/2" THICK ARE TO BE CONSIDERED 1X INSTALLATIONS. 1X WOOD BUCKS ARE OPTIONAL IF UNIT IS INSTALLED DIRECTLY TO SUBSTRATE. WOOD BUCKS DEPICTED AS 2X ARE 1-1/2" THICK OR GREATER. 1X AND 2X BUCKS (WHEN USED) SHALL BE DESIGNED TO PROPERLY TRANSFER LOADS TO THE STRUCTURE. WOOD BUCK DESIGN AND INSTALLATION IS THE RESPONSIBILITY OF THE ENGINEER OR ARCHITECT OF RECORD.

5) ANCHOR EMBEDMENT TO BASE MATERIAL SHALL BE BEYOND WALL DRESSING OR STUCCO. USE ANCHORS OF SUFFICIENT LENGTH AS SPECIFIED ON TABLE 5 & 6, SHEET 4 & 5. NARROW JOINT SEALANT IS USED ON ALL FOUR CORNERS OF THE FRAME. INSTALLATION ANCHORS SHOULD BE SEALED. OVERALL SEALING/FLASHING STRATEGY FOR WATER RESISTANCE OF INSTALLATION SHALL BE DONE BY OTHERS AND IS BEYOND THE SCOPE OF THESE INSTRUCTIONS.

6) SHIMS ARE REQUIRED AT EACH ANCHOR LOCATION WHERE THE PRODUCT IS NOT FLUSH TO THE SUBSTRATE. USE SHIMS CAPABLE OF TRANSFERRING APPLIED LOADS. WOOD BUCKS, BY OTHERS, MUST BE SUFFICIENTLY ANCHORED TO RESIST LOADS IMPOSED ON THEM BY THE WINDOW.

7) DESIGN PRESSURES:
A. NEGATIVE DESIGN LOADS BASED ON STRUCTURAL TEST PRESSURE, FRAME ANALYSIS AND GLASS PER ASTM E1300.
B. POSITIVE DESIGN LOADS BASED ON WATER TEST PRESSURE, STRUCTURAL TEST PRESSURE, FRAME ANALYSIS AND GLASS PER ASTM E1300.

8) THE ANCHORAGE METHODS SHOWN HAVE BEEN DESIGNED TO RESIST THE WINDLOADS CORRESPONDING TO THE REQUIRED DESIGN PRESSURE. THE 33 1/3% STRESS INCREASE HAS NOT BEEN USED IN THE DESIGN OF THIS PRODUCT. THE 1.6 LOAD DURATION FACTOR WAS USED FOR THE EVALUATION OF ANCHORS INTO WOOD. ANCHORS THAT COME INTO CONTACT WITH OTHER DISSIMILAR MATERIALS SHALL MEET THE REQUIREMENTS OF THE FLORIDA BUILDING CODE FOR CORROSION RESISTANCE.

9) REFERENCES: TEST REPORTS FTL-6479; ELCO ULTRACON NOA; ELCO CRETEFLEX NOA; ANSI/AF&PA NDS-2005 FOR WOOD CONSTRUCTION AND ADM-2005 ALUMINUM DESIGN MANUAL.

10) THE 200 SERIES SINGLE HUNG WINDOW WAS FORMERLY KNOWN AS THE 4000 SERIES (FLANGE FRAME) OR 4001 SERIES (FIN FRAME).

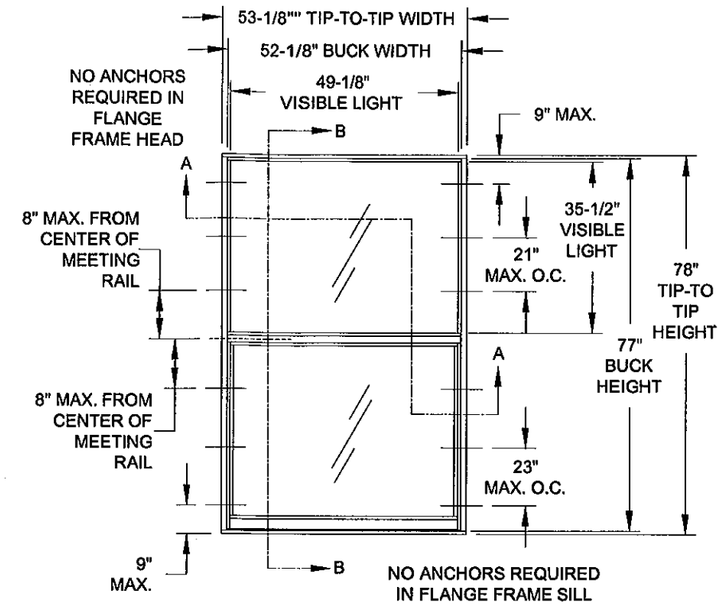

TYP. FLANGE FRAME ELEVATION
(TESTED UNIT)

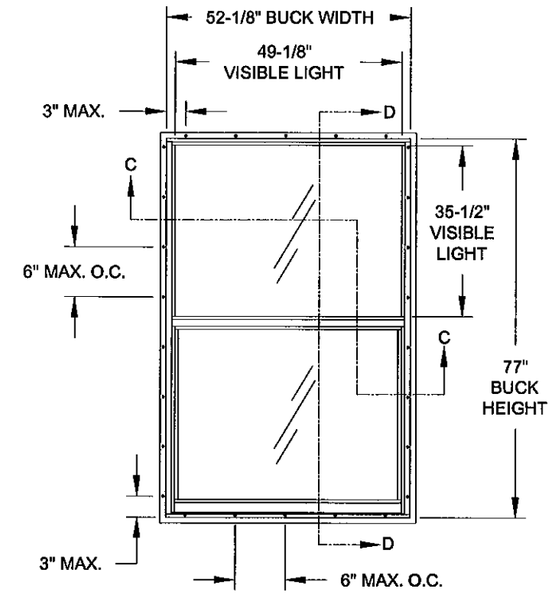

TYP. INTEGRAL FIN FRAME ELEVATION
(TESTED UNIT)

DESIGN PRESSURE RATING	IMPACT RATING
VARIES, SEE SHEETS 2 & 3	NOT RATED FOR IMPACT RESISTANCE

GUIDE TO SHEETS:

GENERAL NOTES..... 1
ELEVATIONS..... 1
DESIGN PRESSURES.....2 & 3
INSTALLATION, FLANGE..... 4
INSTALLATION, INTEGRAL FIN... 5
ANCHOR QUANTITIES..... 6
GLAZING DETAILS..... 7
CORNER ASSEMBLY..... 7
EXTRUSION PROFILES.....8
PARTS LIST.....8

WINDOW SHAPES AND SASH CONFIGURATIONS AS SHOWN BELOW OR SIMILAR, MAY BE USED BY INSCRIBING THE SHAPE IN A BLOCK AND OBTAINING DESIGN PRESSURES FOR THAT BLOCK SIZE FROM THE TABLES ON SHEETS 2 & 3.

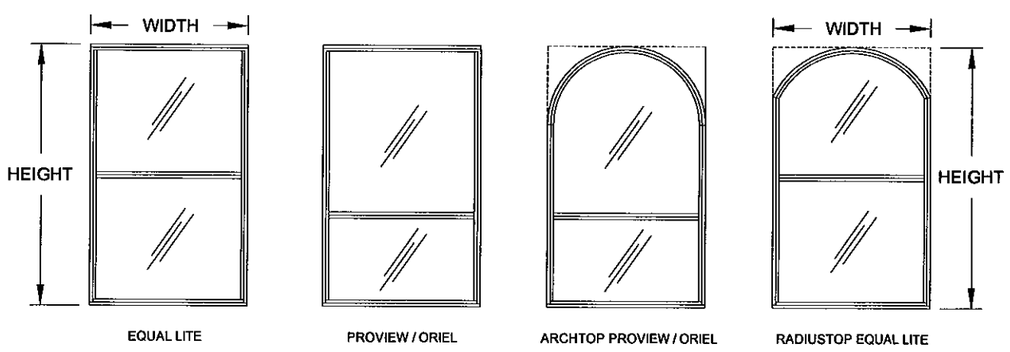

ANTHONY LYNN MILLER
LICENSE
No. 58705
STATE OF FLORIDA
PROFESSIONAL ENGINEER
8/24/11
A. LYNN MILLER, P.E.
P.E.# 58705

PGT®
1070 TECHNOLOGY DRIVE
N. VENICE, FL 34275
P.O. BOX 1529
NOKOMIS, FL 34274
CERT. OF AUTH. #29296

Approved as complying with the Florida Building Code
Date SEPT. 1, 2011
NOA# 11-0614.01
Miami Dade Product Control
By Maricel Perez

Revised By:	Date:	Revision:
Revised By:	Date:	Revision:

Description:	Drawn By:
GENERAL NOTES & ELEVATION	J ROSOWSKI

Title:	Date:
SINGLE HUNG WINDOW INSTALLATION	05/11/11

Series/Model:	Scale:	Sheet:	Drawing No.	Rev:
SH-200	NTS	1 OF 8	MD-SH200-01	

TABLE 1:

Maximum Window Height[1]	Sash Height[2] (see Figure A, this sheet)	Design Pressure (lbs/ft²) for Glass Type A, Fin & Flange Frame — Maximum Window Width[1]															
		19-1/8"		26-1/2"		33"		37"		41"		45"		49"		53-1/8"	
23"	11-9/16" (Equal Lite)	+55.0	-90.0	+55.0	-90.0	+55.0	-90.0	+55.0	-90.0	+55.0	-90.0	+55.0	-90.0	+55.0	-90.0	+55.0	-90.0
37"	under 18-9/16"	+55.0	-90.0	+55.0	-90.0	+55.0	-75.2	+55.0	-65.5	+55.0	-57.3	+50.2	-50.2	+44.8	-44.8	+39.9	-39.9
	18-9/16" (Equal Lite)	+55.0	-90.0	+55.0	-90.0	+55.0	-84.2	+55.0	-74.5	+55.0	-66.5	+55.0	-61.0	+55.0	-57.7	+55.0	-55.0
	over 18-9/16"	+55.0	-90.0	+55.0	-90.0	+55.0	-75.2	+55.0	-65.5	+55.0	-57.3	+50.2	-50.2	+44.8	-44.8	+39.9	-39.9
38-3/8"	under 15-7/8"	+55.0	-90.0	+55.0	-87.1	+55.0	-73.4	+55.0	-63.8	+55.0	-56.8	+50.0	-50.0	+44.8	-44.8	+40.0	-40.0
	15-7/8" thru 19-3/16" [3]	+55.0	-90.0	+55.0	-90.0	+55.0	-78.7	+55.0	-68.0	+55.0	-58.5	+51.1	-51.1	+45.9	-45.9	+41.3	-41.3
	19-1/4" (Equal Lite)	+55.0	-90.0	+55.0	-90.0	+55.0	-82.7	+55.0	-72.6	+55.0	-63.5	+55.0	-57.9	+54.2	-54.2	+51.5	-51.5
	over 19-1/4"	+55.0	-90.0	+55.0	-87.1	+55.0	-73.4	+55.0	-63.8	+55.0	-56.8	+50.0	-50.0	+44.8	-44.8	+40.0	-40.0
45"	under 19-9/16"	+55.0	-81.5	+55.0	-72.3	+55.0	-61.3	+55.0	-55.3	+50.5	-50.5	+45.8	-45.8	+42.0	-42.0	+38.7	-38.7
	19-9/16" thru 22-5/8" [3]	+55.0	-90.0	+55.0	-87.9	+55.0	-74.0	+55.0	-64.3	+55.0	-56.9	+50.1	-50.1	+44.8	-44.8	+40.0	-40.0
	22-9/16" (Equal Lite)	+55.0	-90.0	+55.0	-90.0	+55.0	-78.8	+55.0	-68.1	+55.0	-58.5	+51.1	-51.1	+46.0	-46.0	+41.4	-41.4
	over 22-9/16"	+55.0	-81.5	+55.0	-72.3	+55.0	-61.3	+55.0	-55.3	+50.5	-50.5	+45.8	-45.8	+42.0	-42.0	+38.7	-38.7
49"	under 20-1/8"	+55.0	-71.6	+55.0	-62.8	+55.0	-55.4	+50.3	-50.3	+45.9	-45.9	+41.7	-41.7	+38.9	-38.9	+36.2	-36.2
	20-1/8" thru 24-1/2" [3]	+55.0	-90.0	+55.0	-82.5	+55.0	-69.5	+55.0	-61.6	+55.0	-55.4	+49.3	-49.3	+44.6	-44.6	+40.0	-40.0
	24-9/16" (Equal Lite)	+55.0	-90.0	+55.0	-90.0	+55.0	-76.4	+55.0	-66.5	+55.0	-57.8	+50.4	-50.4	+45.0	-45.0	+40.1	-40.1
	over 24-9/16"	+55.0	-71.6	+55.0	-62.8	+55.0	-55.4	+50.3	-50.3	+45.9	-45.9	+41.7	-41.7	+38.9	-38.9	+36.2	-36.2
50-5/8"	under 20-13/16"	+55.0	-67.8	+55.0	-59.9	+53.3	-53.3	+48.5	-48.5	+44.1	-44.1	+40.2	-40.2	+37.6	-37.6	+34.8	-34.8
	20-13/16" thru 24-11/16" [3]	+55.0	-89.6	+55.0	-80.3	+55.0	-67.7	+55.0	-60.6	+54.2	-54.2	+49.0	-49.0	+44.2	-44.2	+40.0	-40.0
	24-3/4" (Equal Lite)	+55.0	-90.0	+55.0	-90.0	+55.0	-75.4	+55.0	-65.7	+55.0	-57.4	+50.3	-50.3	+44.9	-44.9	+39.9	-39.9
	over 24-3/4"	+55.0	-67.8	+55.0	-59.9	+53.3	-53.3	+48.5	-48.5	+44.1	-44.1	+40.2	-40.2	+37.6	-37.6	+34.8	-34.8
61"	under 24-15/16"	+55.0	-56.0	+43.8	-43.8	+41.9	-41.9	+39.1	-39.1	+36.0	-36.0	+32.6	-32.6	+30.0	-30.0	+27.6	-27.6
	24-15/16" thru 30-5/8" [3]	+55.0	-75.0	+55.0	-66.0	+55.0	-57.4	+51.9	-51.9	+47.4	-47.4	+43.2	-43.2	+39.9	-39.9	+37.3	-37.3
	30-9/16" (Equal Lite)	+55.0	-87.9	+55.0	-75.8	+55.0	-66.6	+55.0	-59.7	+53.5	-53.5	+48.7	-48.7	+43.9	-43.9	+39.9	-39.9
	over 30-9/16"	+55.0	-67.8	+55.0	-59.9	+53.3	-53.3	+48.5	-48.5	+44.1	-44.1	+40.2	-40.2	+37.6	-37.6	+34.8	-34.8
63"	under 25-3/4"	+54.7	-54.7	+41.2	-41.2	+40.3	-40.3	+37.8	-37.8	+34.6	-34.6	+31.3	-31.3	+28.9	-28.9	+26.5	-26.5
	25-3/4" thru 31-5/8" [3]	+55.0	-72.0	+55.0	-63.2	+55.0	-55.7	+50.5	-50.5	+46.1	-46.1	+41.9	-41.9	+39.0	-39.0	+36.3	-36.3
	31-9/16" (Equal Lite)	+55.0	-83.9	+55.0	-71.7	+55.0	-64.8	+55.0	-58.2	+52.4	-52.4	+47.9	-47.9	+43.3	-43.3	+39.7	-39.7
	over 31-9/16"	+55.0	-67.8	+55.0	-59.9	+53.3	-53.3	+48.5	-48.5	+44.1	-44.1	+40.2	-40.2	+37.6	-37.6	+34.8	-34.8
73"	under 29-3/4"	+53.3	-53.3	+39.7	-39.7	+39.1	-39.1	+36.7	-36.7	+33.4	-33.4	+30.3	-30.3	+28.0	-28.0	+25.8	-25.8
	29-3/4" thru 36-5/8" [3]	+55.0	-61.0	+52.0	-52.0	+48.2	-48.2	+44.0	-44.0	+40.1	-40.1	+37.0	-37.0	+34.1	-34.1	+31.4	-31.4
	36-9/16" (Equal Lite)	+55.0	-68.3	+55.0	-56.3	+52.1	-52.1	+51.5	-51.5	+47.0	-47.0	+42.7	-42.7	+39.6	-39.6	+37.0	-37.0
	over 36-9/16"	+55.0	-67.8	+55.0	-56.3	+52.1	-52.1	+48.5	-48.5	+44.1	-44.1	+40.2	-40.2	+37.6	-37.6	+34.8	-34.8
78"	under 31-3/4"	+53.3	-53.3	+39.7	-39.7	+39.1	-39.1	+36.7	-36.7	+33.4	-33.4	+30.3	-30.3	+28.0	-28.0	+25.8	-25.8
	31-3/4" thru 39" [3]	+55.0	-58.3	+48.0	-48.0	+45.2	-45.2	+41.2	-41.2	+37.9	-37.9	+34.8	-34.8	+31.7	-31.7	+29.5	-29.5
	39-1/16" (Equal Lite)	+55.0	-62.5	+50.8	-50.8	+46.3	-46.3	+45.2	-45.2	+44.2	-44.2	+40.3	-40.3	+37.7	-37.7	+34.9	-34.9

[1] Tip-to-tip dimensions for flange windows shown. For fin windows or buck dimensions, subtract 1".

[2] Overall sash height. For clear daylight height, subtract 3-9/16".

[3] Size range includes the standard Pro-View (3-over-2 configuration) for the given Window Height.

For overall sash width, subtract 2-15/16" from the buck dimension.

TABLE 2:

Monolithic Glass Types	
A	1/8" Annealed
B	1/8" Tempered
C	3/16" Annealed
D	3/16" Tempered
E	1/4" Annealed
F	1/4" Tempered

TABLE 3:

Insulated Glass Types	
G	1/8" Annealed, 1/4" Airspace, 1/8" Annealed
H	3/16" Annealed, 3/16" Airspace, 1/8" Annealed
I	1/8" Tempered, 1/4" Airspace, 1/8" Tempered
J	3/16" Tempered, 3/16" Airspace, 1/8" Tempered

FIGURE A: SASH CROSS SECTION (WITH MONOLITHIC GLASS)

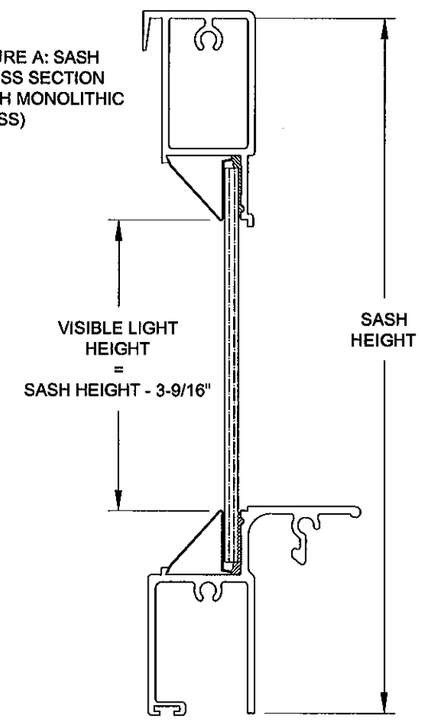

NOTES

1) USE THIS TABLE FOR ALL WINDOWS THAT ARE GLAZED WITH 1/8" ANNEALED GLASS (TYPE A).

2) FOR SIZES NOT SHOWN, ROUND UP TO THE NEXT AVAILABLE WIDTH OR HEIGHT DIMENSION SHOWN ON THE TABLE.

Approved as complying with the Florida Building Code
Date SEPT. 1, 2011
NOA# 11-0614.01
Miami Dade Product Control
By Manuel Perez

Drawn By: J ROSOWSKI
Drawn Date: 05/11/11
Revision:
Revision:
Revised By:
Date:
Revised By:
Date:
Description: DESIGN PRESSURE A
Title: SINGLE HUNG WINDOW INSTALLATION
Scale: NTS
Sheet: 2 OF 8
Drawing No. MD-SH200-01
Rev:
Series/Model: SH-200

1070 TECHNOLOGY DRIVE
N. VENICE, FL 34275
P.O. BOX 1529
NOKOMIS, FL 34274
CERT. OF AUTH. #29296

ANTHONY LYNN MILLER LICENSE No. 58705 STATE OF FLORIDA PROFESSIONAL ENGINEER
A. LYNN MILLER, P.E.
P.E.# 58705

TABLE 4:

Maximum Window Height[1]	Sash Height[2] (see Figure A, this sheet)	Design Pressure (lbs/ft²) for Glass Type B - J, Fin & Flange Frame — Maximum Window Width[1]															
		19-1/8"		26-1/2"		33"		37"		41"		45"		49"		53-1/8"	
23"	11-9/16" (Equal Lite)	+55.0	-90.0	+55.0	-90.0	+55.0	-90.0	+55.0	-90.0	+55.0	-90.0	+55.0	-90.0	+55.0	-90.0	+55.0	-90.0
37"	under 18-9/16"	+55.0	-90.0	+55.0	-90.0	+55.0	-90.0	+55.0	-90.0	+55.0	-90.0	+55.0	-84.3	+55.0	-78.0	+55.0	-72.9
	18-9/16" (Equal Lite)	+55.0	-90.0	+55.0	-90.0	+55.0	-90.0	+55.0	-90.0	+55.0	-90.0	+55.0	-90.0	+55.0	-81.1	+55.0	-73.4
	over 18-9/16"	+55.0	-90.0	+55.0	-90.0	+55.0	-90.0	+55.0	-90.0	+55.0	-90.0	+55.0	-84.3	+55.0	-78.0	+55.0	-72.9
38-3/8"	under 15-7/8"	+55.0	-90.0	+55.0	-90.0	+55.0	-90.0	+55.0	-90.0	+55.0	-88.5	+55.0	-81.8	+55.0	-75.0	+55.0	-68.5
	15-7/8" thru 19-3/16" [3]	+55.0	-90.0	+55.0	-90.0	+55.0	-90.0	+55.0	-90.0	+55.0	-90.0	+55.0	-87.9	+55.0	-78.8	+55.0	-71.2
	19-1/4" (Equal Lite)	+55.0	-90.0	+55.0	-90.0	+55.0	-90.0	+55.0	-90.0	+55.0	-90.0	+55.0	-87.9	+55.0	-78.8	+55.0	-71.2
	over 19-1/4"	+55.0	-90.0	+55.0	-90.0	+55.0	-90.0	+55.0	-90.0	+55.0	-88.5	+55.0	-81.8	+55.0	-75.0	+55.0	-68.5
45"	under 19-9/16"	+55.0	-90.0	+55.0	-90.0	+55.0	-90.0	+55.0	-86.5	+55.0	-80.2	+55.0	-73.2	+55.0	-66.3	+55.0	-59.7
	19-9/16" thru 22-5/8" [3]	+55.0	-90.0	+55.0	-90.0	+55.0	-90.0	+55.0	-90.0	+55.0	-89.1	+55.0	-78.5	+55.0	-70.0	+55.0	-63.0
	22-9/16" (Equal Lite)	+55.0	-90.0	+55.0	-90.0	+55.0	-90.0	+55.0	-90.0	+55.0	-89.3	+55.0	-78.5	+55.0	-70.0	+55.0	-63.0
	over 22-9/16"	+55.0	-90.0	+55.0	-90.0	+55.0	-90.0	+55.0	-86.5	+55.0	-80.2	+55.0	-73.2	+55.0	-66.3	+55.0	-59.7
49"	under 20-1/8"	+55.0	-90.0	+55.0	-90.0	+55.0	-86.0	+55.0	-81.8	+55.0	-75.7	+55.0	-69.2	+55.0	-62.8	+55.0	-57.7
	20-1/8" thru 24-1/2" [3]	+55.0	-90.0	+55.0	-90.0	+55.0	-90.0	+55.0	-90.0	+55.0	-84.8	+55.0	-74.2	+55.0	-65.9	+55.0	-59.1
	24-9/16" (Equal Lite)	+55.0	-90.0	+55.0	-90.0	+55.0	-90.0	+55.0	-90.0	+55.0	-84.8	+55.0	-74.2	+55.0	-65.9	+55.0	-59.1
	over 24-9/16"	+55.0	-90.0	+55.0	-90.0	+55.0	-86.0	+55.0	-81.8	+55.0	-75.7	+55.0	-69.2	+55.0	-62.8	+55.0	-57.7
50-5/8"	under 20-13/16"	+55.0	-90.0	+55.0	-90.0	+55.0	-83.5	+55.0	-79.1	+55.0	-74.0	+55.0	-67.3	+55.0	-61.9	+55.0	-56.8
	20-13/16" thru 24-11/16" [3]	+55.0	-90.0	+55.0	-90.0	+55.0	-90.0	+55.0	-90.0	+55.0	-83.2	+55.0	-72.7	+55.0	-64.5	+55.0	-57.8
	24-3/4" (Equal Lite)	+55.0	-90.0	+55.0	-90.0	+55.0	-90.0	+55.0	-90.0	+55.0	-83.2	+55.0	-72.7	+55.0	-64.5	+55.0	-57.8
	over 24-3/4"	+55.0	-90.0	+55.0	-90.0	+55.0	-83.5	+55.0	-79.1	+55.0	-74.0	+55.0	-67.3	+55.0	-61.9	+55.0	-56.8
61"	under 24-15/16"	+55.0	-87.9	+55.0	-75.6	+55.0	-65.7	+55.0	-62.3	+55.0	-60.0	+55.0	-56.5	+53.2	-53.2	+49.6	-49.6
	24-15/16" thru 30-5/8" [3]	+55.0	-87.9	+55.0	-75.8	+55.0	-74.1	+55.0	-74.1	+55.0	-74.1	+55.0	-65.5	+55.0	-57.5	+51.1	-51.1
	30-9/16" (Equal Lite)	+55.0	-87.9	+55.0	-75.8	+55.0	-74.1	+55.0	-74.1	+55.0	-74.1	+55.0	-65.5	+55.0	-57.5	+51.1	-51.1
	over 30-9/16"	+55.0	-87.9	+55.0	-75.8	+55.0	-74.1	+55.0	-74.1	+55.0	-74.0	+55.0	-65.5	+55.0	-57.5	+51.1	-51.1
63"	under 25-3/4"	+55.0	-83.9	+55.0	-71.7	+55.0	-62.0	+55.0	-59.9	+55.0	-57.8	+54.5	-54.5	+51.3	-51.3	+48.3	-48.3
	25-3/4" thru 31-5/8" [3]	+55.0	-83.9	+55.0	-71.7	+55.0	-69.4	+55.0	-69.4	+55.0	-69.4	+55.0	-64.5	+55.0	-56.5	+50.2	-50.2
	31-9/16" (Equal Lite)	+55.0	-83.9	+55.0	-71.7	+55.0	-69.4	+55.0	-69.4	+55.0	-69.4	+55.0	-64.5	+55.0	-56.5	+50.2	-50.2
	over 31-9/16"	+55.0	-83.9	+55.0	-71.7	+55.0	-69.4	+55.0	-69.4	+55.0	-69.4	+55.0	-64.5	+55.0	-56.5	+50.2	-50.2
73"	under 29-3/4"	+55.0	-68.3	+55.0	-56.3	+52.1	-52.1	+51.5	-51.5	+51.5	-51.5	+51.5	-51.5	+50.0	-50.0	+46.4	-46.4
	29-3/4" thru 36-5/8" [3]	+55.0	-68.3	+55.0	-56.3	+52.1	-52.1	+51.5	-51.5	+51.5	-51.5	+51.5	-51.5	+51.5	-51.5	+46.4	-46.4
	36-9/16" (Equal Lite)	+55.0	-68.3	+55.0	-56.3	+52.1	-52.1	+51.5	-51.5	+51.5	-51.5	+51.5	-51.5	+51.5	-51.5	+46.4	-46.4
	over 36-9/16"	+55.0	-68.3	+55.0	-56.3	+52.1	-52.1	+51.5	-51.5	+51.5	-51.5	+51.5	-51.5	+51.5	-51.5	+46.4	-46.4
78"	under 31-3/4"	+55.0	-62.5	+50.8	-50.8	+46.3	-46.3	+45.2	-45.2	+45.0	-45.0	+45.0	-45.0	+45.0	-45.0	+45.0	-45.0
	31-3/4" thru 39" [3]	+55.0	-62.5	+50.8	-50.8	+46.3	-46.3	+45.2	-45.2	+45.0	-45.0	+45.0	-45.0	+45.0	-45.0	+45.0	-45.0
	39-1/16" (Equal Lite)	+55.0	-62.5	+50.8	-50.8	+46.3	-46.3	+45.2	-45.2	+45.0	-45.0	+45.0	-45.0	+45.0	-45.0	+45.0	-45.0

[1] Tip-to-tip dimensions for flange windows shown. For fin windows or buck dimensions, subtract 1".
[2] Overall sash height. For clear daylight height, subtract 3-9/16".
[3] Size range includes the standard Pro-View (3-over-2 configuration) for the given Window Height.
For overall sash width, subtract 2-15/16" from the buck dimension.

TABLE 2:

Monolithic Glass Types	
A	1/8" Annealed
B	1/8" Tempered
C	3/16" Annealed
D	3/16" Tempered
E	1/4" Annealed
F	1/4" Tempered

TABLE 3:

Insulated Glass Types	
G	1/8" Annealed, 1/4" Airspace, 1/8" Annealed
H	3/16" Annealed, 3/16" Airspace, 1/8" Annealed
I	1/8" Tempered, 1/4" Airspace, 1/8" Tempered
J	3/16" Tempered, 3/16" Airspace, 1/8" Tempered

FIGURE A: SASH CROSS SECTION (WITH I.G. GLASS)

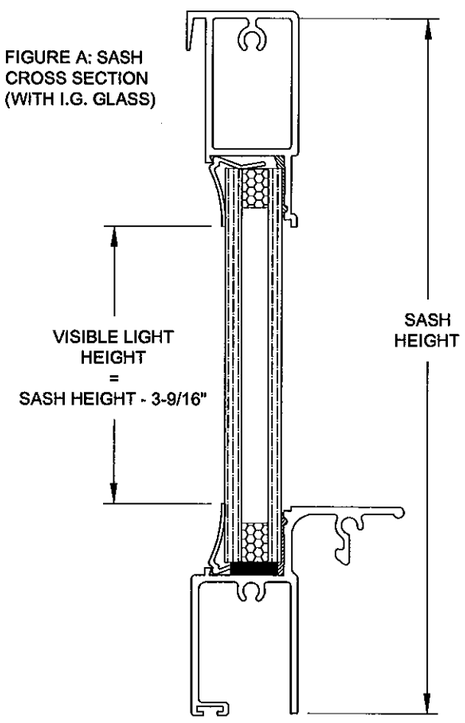

NOTES

1) USE THIS TABLE FOR ALL WINDOWS THAT ARE GLAZED WITH GLASS TYPES B - J. NOT APPLICABLE WITH 1/8" ANNEALED GLASS (TYPE A).

2) FOR SIZES NOT SHOWN, ROUND UP TO THE NEXT AVAILABLE WIDTH OR HEIGHT DIMENSION SHOWN ON THE TABLE.

Approved as complying with the Florida Buiding Code
Date SEPT. 1, 2011
NOA# 11-0614.01
Miami Dade Product Control
By: Maurel Perez

Drawn By: J ROSOWSKI
Drawn Date: 05/11/11
Revision:
Revision:
Revised By:
Date:
Revised By:
Date:
Description: DESIGN PRESSURE B-J
Title: SINGLE HUNG WINDOW INSTALLATION
Series/Model: SH-200
Scale: NTS
Sheet: 3 OF 8
Drawing No. MD-SH200-01
Rev:

PGT®
1070 TECHNOLOGY DRIVE
N. VENICE, FL 34275
P.O. BOX 1529
NOKOMIS, FL 34274
CERT. OF AUTH. #29296

ANTHONY LYNN MILLER ★ LICENSE No. 58705 STATE OF FLORIDA PROFESSIONAL ENGINEER
A. LYNN MILLER, P.E.
P.E.# 58705

INSTALLATION DETAILS FOR FLANGE FRAMES

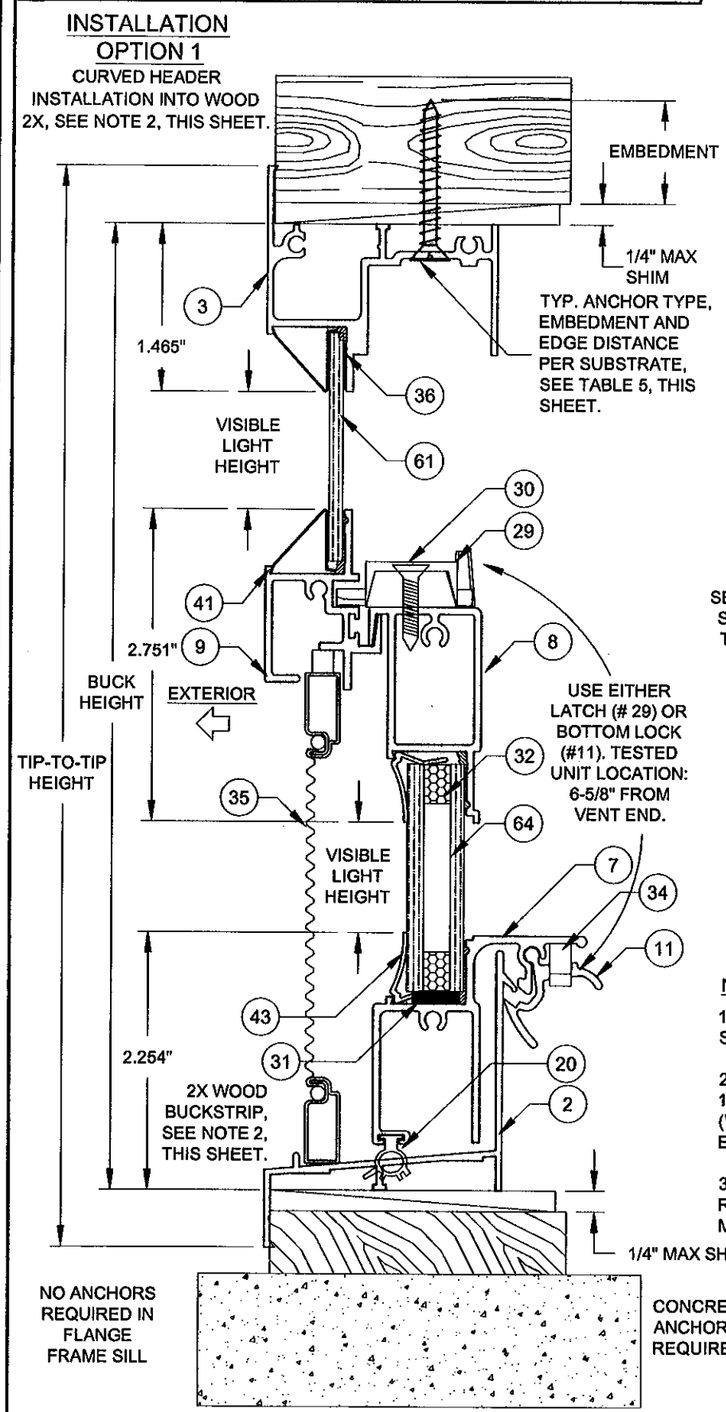

VERTICAL SECTION B-B

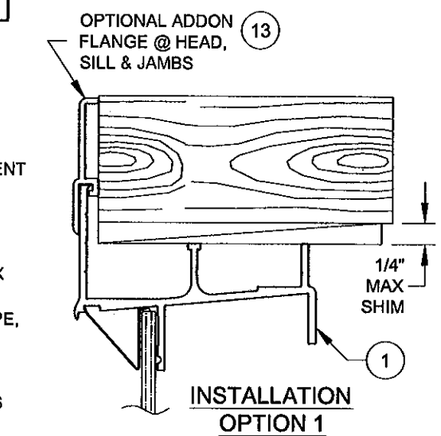

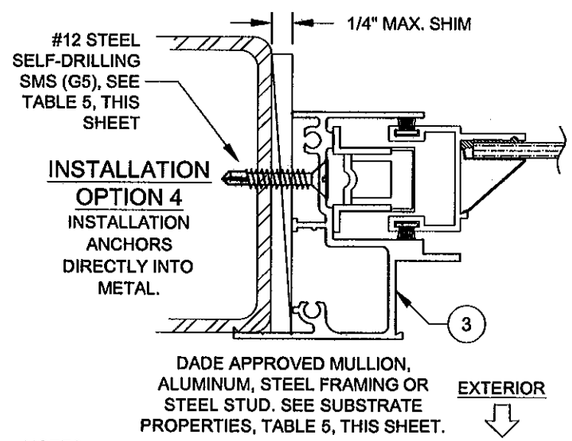

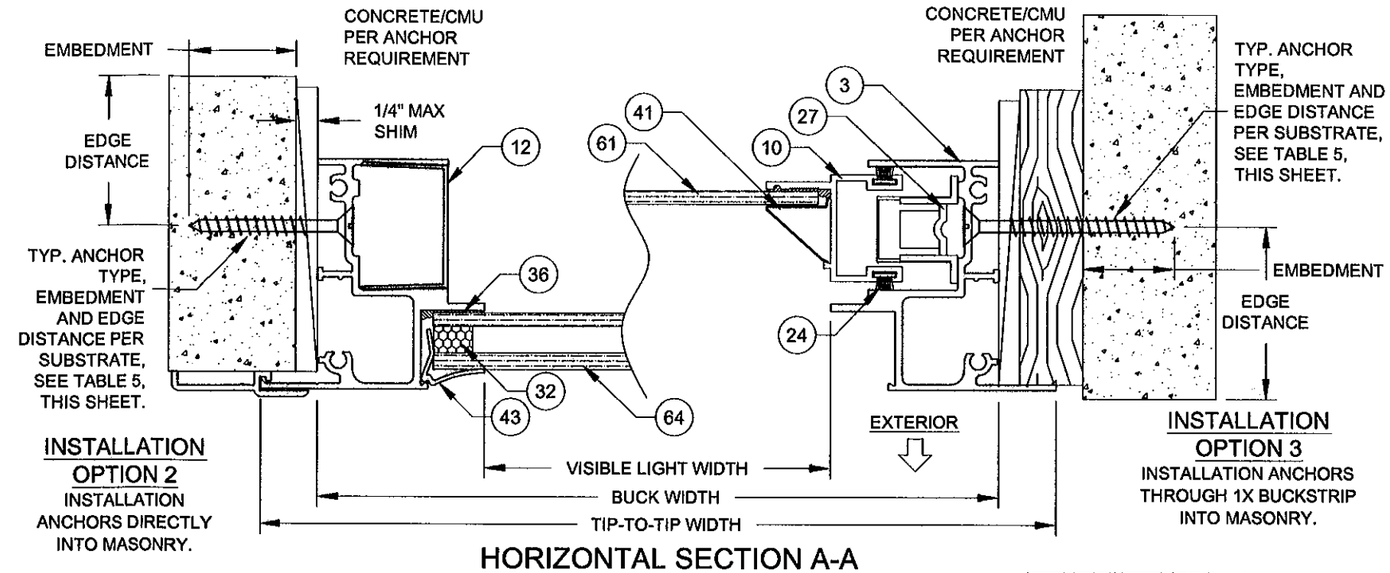

HORIZONTAL SECTION A-A

TABLE 5:

Anchor Group	Anchor	Substrate	Min. Edge Distance	Min. Embedment
A	1/4" 410 SS CreteFlex	Ungrouted CMU, (ASTM C-90)	1"	1-1/4"
B	#12 Steel SMS Screw (G5)	P.T. Southern Pine (SG = .55)	9/16"	1-3/8"
		Aluminum, 6063-T5 min.	3/8"	1/8"*
		Steel Stud, Gr. 33 min.	3/8"	0.0346 (20 Ga)*
		A36 Steel	3/8"	1/8"*
	1/4" 410 SS CreteFlex	P.T. Southern Pine (SG = .55)	1"	1-3/8"
		Concrete (min. 3.35 ksi)	1"	1"
		Ungrouted CMU, (ASTM C-90)	1-3/4"	1-1/4"
C	1/4" Steel Ultracon	P.T. Southern Pine (SG = .55)	1"	1-3/8"
		Concrete (min. 2.7 ksi)	1"	1-3/8"
		Ungrouted CMU, (ASTM C-90)	1"	1-1/4"

* MIMIMUM OF 3 THREADS BEYOND THE METAL SUBSTRATE.

EGRESS FORMULAS (EQUAL-LITE)

WIDTH: TIP-TO-TIP WIDTH - 4"
HEIGHT: TIP-TO-TIP WIDTH/2 - 6-5/16"

VISIBLE LIGHT FORMULAS (EQUAL-LITE)

WIDTH (SASH): TIP-TO-TIP WIDTH - 5-1/16"
WIDTH (FIXED): TIP-TO-TIP WIDTH - 4"
HEIGHT: (TIP-TO-TIP HEIGHT - 7-1/16")/2

NOTES

1) USE ONLY SUBSTRATE-APPROPRIATE ANCHORS LISTED ON TABLE 5 OF THIS SHEET. FOLLOW EMBEDMENT AND EDGE DISTANCE LIMITS. ANY INSTALLATION OPTION SHOWN MAY BE USED ON ANY SIDE OF THE WINDOW.

2) MASONRY ANCHORS MAY BE USED INTO WOOD AS PER TABLE 5, THIS SHEET. ALL WOOD BUCKS LESS THAN 1-1/2" THICK ARE TO BE CONSIDERED 1X INSTALLATIONS. 1X WOOD BUCKS ARE OPTIONAL IF UNIT IS INSTALLED DIRECTLY TO SUBSTRATE. WOOD BUCKS DEPICTED AS 2X ARE 1-1/2" THICK OR GREATER. 1X AND 2X BUCKS (WHEN USED) SHALL BE DESIGNED TO PROPERLY TRANSFER LOADS TO THE STRUCTURE. WOOD BUCK DESIGN AND INSTALLATION IS THE RESPONSIBILITY OF THE ENGINEER OR ARCHITECT OF RECORD.

3) VISIBLE LIGHT WIDTH OR HEIGHT (ALSO REFERRED TO AS DAYLIGHT OPENING) IS MEASURED FROM BEADING TO BEADING.

ANTHONY LYNN MILLER LICENSE No. 58705 STATE OF FLORIDA PROFESSIONAL ENGINEER
8/24/11
A. LYNN MILLER, P.E.
P.E.# 58705

PGT®
1070 TECHNOLOGY DRIVE
N. VENICE, FL 34275
P.O. BOX 1529
NOKOMIS, FL 34274
CERT. OF AUTH. #29296

Approved as complying with the Florida Building Code
Date SEPT. 1, 2011
NOA# 11-0614.01
Miami Dade Product Control
By Manuel Serra

Revised By:	Date:	Revision:
Revised By:	Date:	Revision:

Description:	Drawn By:
FLANGE FRAME INSTALLATION DETAILS	J ROSOWSKI

Title:	Date:
SINGLE HUNG WINDOW INSTALLATION	05/11/11

Series/Model:	Scale:	Sheet:	Drawing No.	Rev:
SH-200	NTS	4 OF 8	MD-SH200-01	

INSTALLATION DETAILS FOR FIN FRAMES

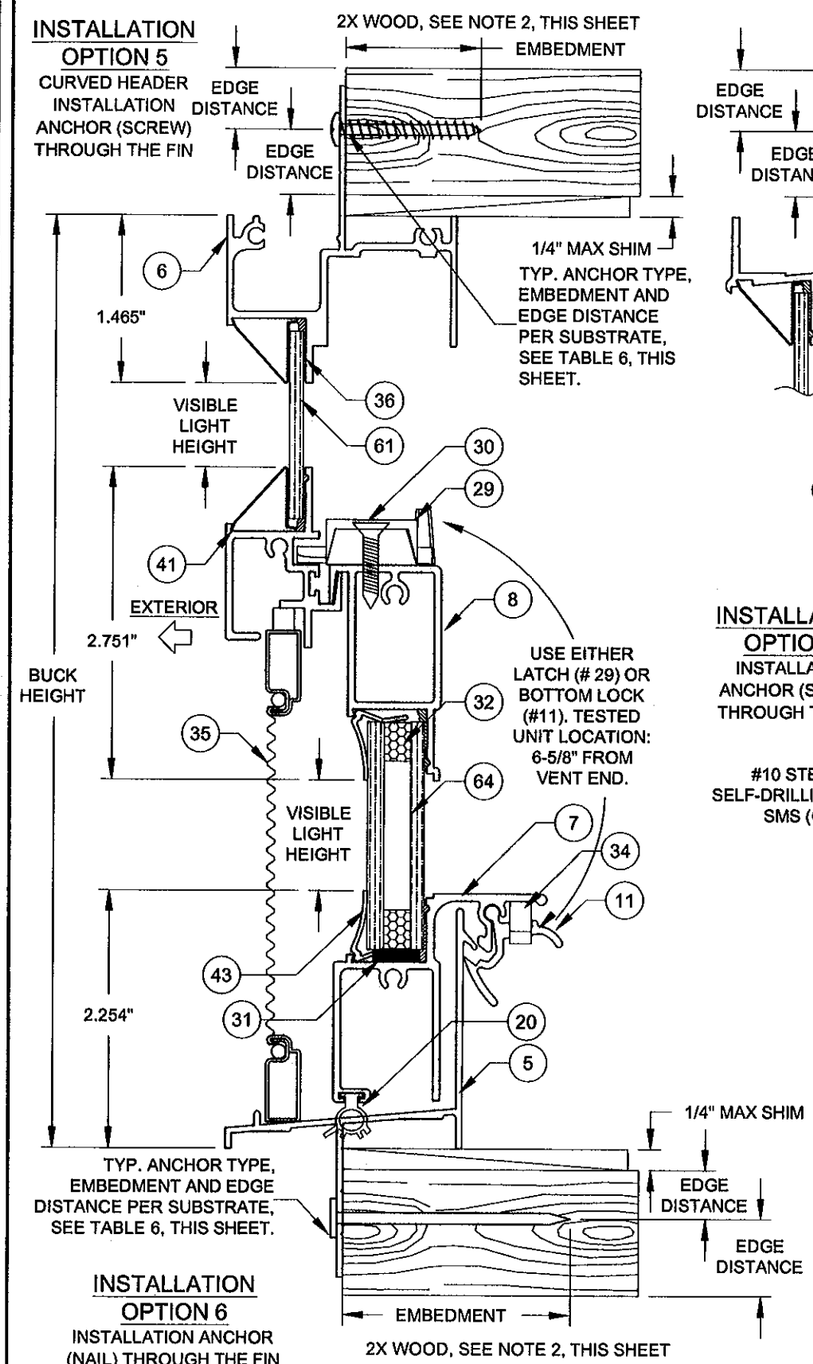

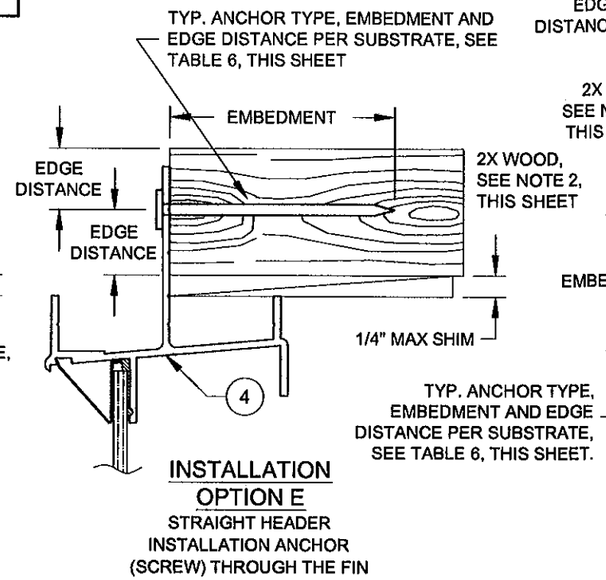

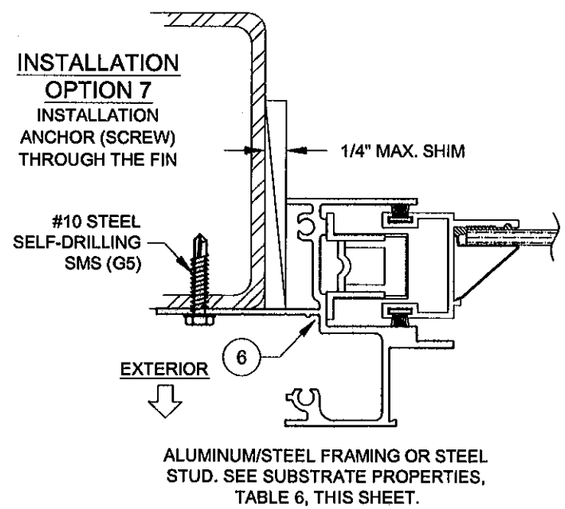

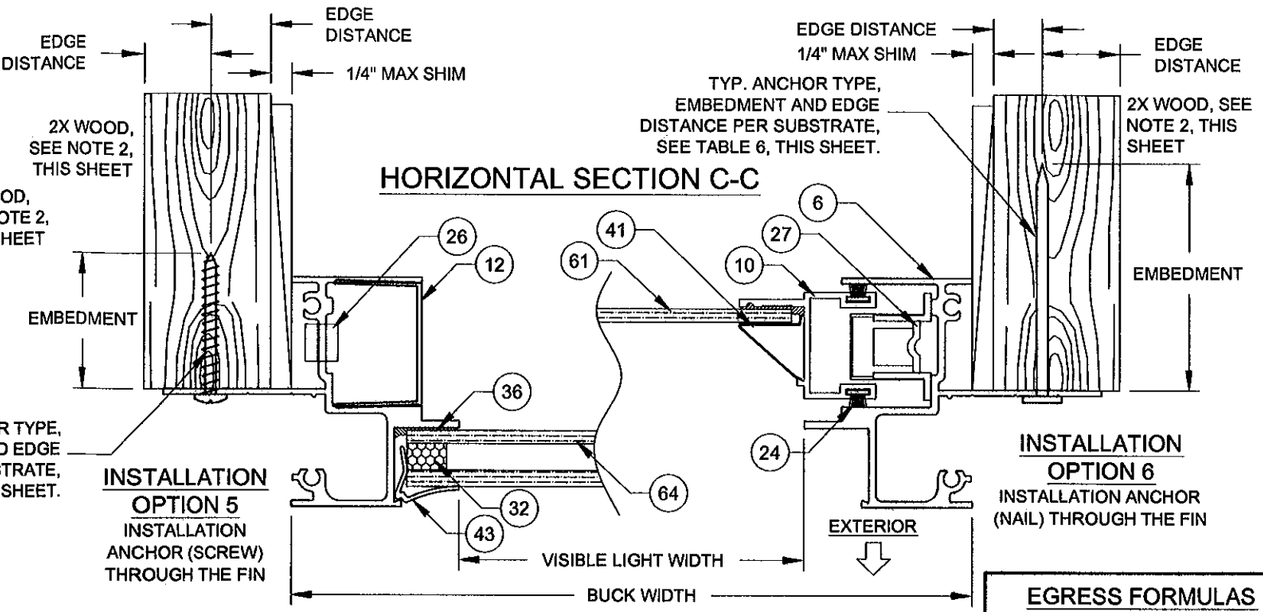

EGRESS FORMULAS (EQUAL-LITE)

WIDTH: BUCK WIDTH - 3"
HEIGHT: BUCK HEIGHT/2 - 5-13/16"

VISIBLE LIGHT FORMULAS (EQUAL-LITE)

WIDTH (SASH): BUCK WIDTH - 4-1/16"
WIDTH (FIXED): BUCK WIDTH - 3"
HEIGHT: (BUCK HEIGHT - 6-1/16") / 2

MULLION SECTION

DADE APPROVED MULLION, MAY BE VERTICAL OR HORIZONTAL. MAX. 1/4" SHIM. SEE SUBSTRATE PROPERTIES, TABLE 6, THIS SHEET.

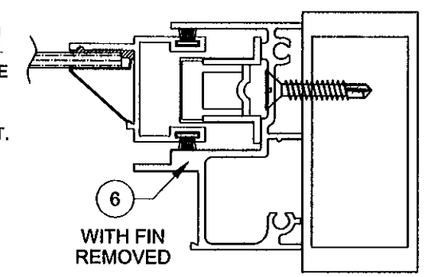

TABLE 6:

Anchor	Substrate	Min. Edge Distance	Min. Embedment
2-1/2" x .113" Box Nail	P.T. Southern Pine (SG = .55)	1/2"	2-7/16"
2-1/2" x .131" Common Nail	P.T. Southern Pine (SG = .55)	9/16"	2-7/16"
2-1/2" x .145" Roofing Nail	P.T. Southern Pine (SG = .55)	9/16"	2-7/16"
#10 Steel SMS Screw (G5)	P.T. Southern Pine (SG = .55)	3/4"	1-3/8"
	Aluminum, 6063-T5 min.	3/8"	1/8"
	Steel Stud, Gr. 33 min.	3/8"	0.036
	A36 Steel	3/8"	1/8"

* MIMIMUM OF 3 THREADS BEYOND THE METAL SUBSTRATE.

NOTES

1) USE ONLY SUBSTRATE APPROPRIATE ANCHORS LISTED ON TABLE 6 OF THIS SHEET. FOLLOW EMBEDMENT AND EDGE DISTANCE LIMITS. ANY INSTALLATION OPTION SHOWN MAY BE USED ON ANY SIDE OF THE WINDOW.

2) 2X WOOD FRAMING OR BUCK, 1-1/2" THICK OR GREATER.

3) VISIBLE LIGHT WIDTH OR HEIGHT (ALSO REFERRED TO AS DAYLIGHT OPENING) IS MEASURED FROM BEADING TO BEADING.

ANTHONY LYNN MILLER
LICENSE
No. 58705
STATE OF FLORIDA
PROFESSIONAL ENGINEER
8/24/11
A. LYNN MILLER, P.E.
P.E.# 58705

PGT®
1070 TECHNOLOGY DRIVE
N. VENICE, FL 34275
P.O. BOX 1529
NOKOMIS, FL 34274
CERT. OF AUTH. #29296

Approved as complying with the Florida Building Code
Date SEPT. 1, 2011
NOA# 11-0614.01
Miami Dade Product Control
By Manuel Perez

Revised By:	Date:	Revision:
Revised By:	Date:	Revision:

Description:	Drawn By:
FIN FRAME INSTALLATION DETAILS	J ROSOWSKI

Title:	Date:
SINGLE HUNG WINDOW INSTALLATION	05/11/11

Series/Model:	Scale:	Sheet:	Drawing No.	Rev:
SH-200	NTS	5 OF 8	MD-SH200-01	

TABLE 7:

Anchor Quantities Required, Flange Frame

Maximum Window Width[1]

Maximum Window Height[1]	Sash Height[2] (see Figure A, this sheet)	19-1/8" Group A		19-1/8" Group B		19-1/8" Group C		26-1/2" Group A		26-1/2" Group B		26-1/2" Group C		33" Group A		33" Group B		33" Group C		37" Group A		37" Group B		37" Group C	
		Above MR	Below MR	Above MR	Below MR	Above MR	Below MR	Above MR	Below MR	Above MR	Below MR	Above MR	Below MR	Above MR	Below MR	Above MR	Below MR	Above MR	Below MR	Above MR	Below MR	Above MR	Below MR	Above MR	Below MR
23"	11-9/16" (Equal Lite)	2	2	2	2	2	2	2	2	2	2	2	2	2	2	2	2	2	2	2	2	2	2	2	2
37"	under 18-9/16"	2	2	2	2	2	2	2	2	2	2	2	2	3	2	3	2	2	2	3	2	3	2	2	2
	18-9/16" (Equal Lite)	2	2	2	2	2	2	2	2	2	2	2	2	2	2	2	2	2	2	2	2	2	2	2	2
	over 18-9/16"	2	2	2	2	2	2	2	2	2	2	2	2	2	3	2	3	2	2	2	3	2	3	2	2
38-3/8"	under 15-7/8"	2	2	2	2	2	2	3	2	2	2	2	2	3	2	3	2	2	2	3	2	3	2	3	2
	15-7/8" thru 19-3/16" [3]	2	2	2	2	2	2	2	2	2	2	2	2	3	2	2	2	2	2	3	2	3	2	2	2
	19-1/4" (Equal Lite)	2	2	2	2	2	2	2	2	2	2	2	2	2	2	2	2	2	2	3	3	2	2	2	2
	over 19-1/4"	2	2	2	2	2	2	2	3	2	2	2	2	2	3	2	3	2	2	2	3	2	3	2	3
45"	under 19-9/16"	2	2	2	2	2	2	3	2	3	2	2	2	4	2	3	2	3	2	4	2	3	2	3	2
	19-9/16" thru 22-5/8" [3]	2	2	2	2	2	2	2	2	2	2	2	2	3	2	3	2	2	2	3	2	3	2	3	2
	22-9/16" (Equal Lite)	2	2	2	2	2	2	2	2	2	2	2	2	3	3	2	2	2	2	3	3	3	3	2	2
	over 22-9/16"	2	2	2	2	2	2	2	3	2	3	2	2	2	4	2	3	2	3	2	4	2	3	2	3
49"	under 20-1/8"	2	2	2	2	2	2	3	2	3	2	3	2	4	2	3	2	3	2	4	2	4	2	3	2
	20-1/8" thru 24-1/2" [3]	2	2	2	2	2	2	3	2	2	2	2	2	3	2	3	2	2	2	4	3	3	2	3	2
	24-9/16" (Equal Lite)	2	2	2	2	2	2	2	2	2	2	2	2	3	3	3	3	2	2	3	3	3	3	2	2
	over 24-9/16"	2	2	2	2	2	2	2	3	2	3	2	3	2	4	2	3	2	3	2	4	2	4	2	3
50-5/8"	under 20-13/16"	3	2	2	2	2	2	3	2	3	2	3	2	4	2	4	2	3	2	4	2	4	2	3	2
	20-13/16" thru 24-11/16" [3]	2	2	2	2	2	2	3	2	2	2	2	2	3	2	3	2	3	2	4	3	3	2	3	2
	24-3/4" (Equal Lite)	2	2	2	2	2	2	2	2	2	2	2	2	3	3	3	3	2	2	3	3	3	3	2	2
	over 24-3/4"	2	3	2	2	2	2	2	3	2	3	2	3	2	4	2	4	2	3	2	4	2	4	2	3
61"	under 24-15/16"	3	3	3	3	3	3	4	3	3	3	3	3	4	3	4	3	3	3	4	3	4	3	3	3
	24-15/16" thru 30-5/8" [3]	2	2	2	2	2	2	3	2	3	2	2	2	3	2	3	2	3	2	4	3	3	2	3	2
	30-9/16" (Equal Lite)	2	2	2	2	2	2	2	2	2	2	2	2	3	3	3	3	2	2	3	3	3	3	2	2
	over 30-9/16"	2	3	2	2	2	2	2	3	2	3	2	2	2	4	2	3	2	3	2	4	2	3	2	3
63"	under 25-3/4"	3	2	3	2	3	2	4	2	3	2	3	2	4	2	3	2	3	2	4	2	4	2	3	2
	25-3/4" thru 31-5/8" [3]	2	2	2	2	2	2	3	2	2	2	2	2	3	2	3	2	2	2	4	3	3	2	3	2
	31-9/16" (Equal Lite)	2	2	2	2	2	2	2	2	2	2	2	2	3	3	3	3	2	2	3	3	3	3	2	2
	over 31-9/16"	2	2	2	2	2	2	2	3	2	3	2	2	2	3	2	3	2	3	2	4	2	3	2	3
73"	under 29-3/4"	3	2	3	2	3	2	3	2	3	2	3	2	3	2	3	2	3	2	4	2	3	2	3	2
	29-3/4" thru 36-5/8" [3]	3	2	3	2	3	2	3	2	3	2	3	2	3	2	3	2	3	2	3	2	3	2	3	2
	36-9/16" (Equal Lite)	2	2	2	2	2	2	2	2	2	2	2	2	2	2	2	2	2	2	3	3	2	2	2	2
	over 36-9/16"	2	2	2	2	2	2	2	2	2	2	2	2	2	3	2	2	2	2	3	3	2	3	2	2
78"	under 31-3/4"	3	2	3	2	3	2	3	2	3	2	3	2	3	2	3	2	3	2	3	2	3	2	3	2
	31-3/4" thru 39" [3]	3	2	3	2	3	2	3	2	3	2	3	2	3	2	3	2	3	2	3	2	3	2	3	2
	39-1/16" (Equal Lite)	2	2	2	2	2	2	2	2	2	2	2	2	2	2	2	2	2	2	3	3	2	2	2	2

Maximum Window Height[1]	Sash Height[2] (see Figure A, this sheet)	41" Group A		41" Group B		41" Group C		45" Group A		45" Group B		45" Group C		49" Group A		49" Group B		49" Group C		53-1/8" Group A		53-1/8" Group B		53-1/8" Group C	
		Above MR	Below MR	Above MR	Below MR	Above MR	Below MR	Above MR	Below MR	Above MR	Below MR	Above MR	Below MR	Above MR	Below MR	Above MR	Below MR	Above MR	Below MR	Above MR	Below MR	Above MR	Below MR	Above MR	Below MR
23"	11-9/16" (Equal Lite)	2	2	2	2	2	2	2	2	2	2	2	2	2	2	2	2	2	2	2	2	2	2	2	2
37"	under 18-9/16"	3	2	3	2	3	2	4	2	3	2	3	2	4	2	3	2	3	2	4	2	3	2	3	2
	18-9/16" (Equal Lite)	3	3	2	2	2	2	3	3	3	3	2	2	3	3	3	3	2	2	3	3	3	3	2	2
	over 18-9/16"	2	3	2	3	2	3	2	4	2	3	2	3	2	4	2	3	2	3	2	4	2	3	2	3
38-3/8"	under 15-7/8"	4	2	3	2	3	2	4	2	3	2	3	2	4	2	3	2	3	2	4	2	3	2	3	2
	15-7/8" thru 19-3/16" [3]	3	2	3	2	2	2	3	2	3	2	3	2	3	2	3	2	3	2	3	2	3	2	2	2
	19-1/4" (Equal Lite)	3	3	2	2	2	2	3	3	3	3	2	2	3	3	3	3	2	2	3	3	3	3	2	2
	over 19-1/4"	2	4	2	3	2	3	2	4	2	3	2	3	2	4	2	3	2	3	2	4	2	3	2	3
45"	under 19-9/16"	4	2	4	2	3	2	4	2	4	2	3	2	4	2	4	2	3	2	4	2	3	2	3	2
	19-9/16" thru 22-5/8" [3]	4	3	3	2	3	2	3	3	3	2	3	2	3	2	3	2	3	2	3	2	3	2	3	2
	22-9/16" (Equal Lite)	3	3	3	3	2	2	3	3	3	3	2	2	3	3	3	3	2	2	3	3	3	3	2	2
	over 22-9/16"	2	4	2	4	2	3	2	4	2	4	2	3	2	4	2	4	2	3	2	4	2	3	2	3
49"	under 20-1/8"	4	2	4	2	3	2	4	2	4	2	3	2	4	2	4	2	3	2	4	2	4	2	3	2
	20-1/8" thru 24-1/2" [3]	4	3	3	2	3	2	4	3	3	2	3	2	3	3	3	2	3	2	3	2	3	2	3	2
	24-9/16" (Equal Lite)	3	3	3	3	2	2	3	3	3	3	2	2	3	3	3	3	2	2	3	3	3	3	2	2
	over 24-9/16"	2	4	2	4	2	3	2	4	2	4	2	3	2	4	2	4	2	3	2	4	2	4	2	3
50-5/8"	under 20-13/16"	4	2	4	2	3	2	4	2	4	2	3	2	4	2	4	2	3	2	4	2	4	2	3	2
	20-13/16" thru 24-11/16" [3]	4	3	3	2	3	2	4	3	3	2	3	2	4	3	3	2	3	2	3	3	3	2	3	2
	24-3/4" (Equal Lite)	3	3	3	3	3	3	3	3	3	3	2	2	3	3	3	3	2	2	3	3	3	3	2	2
	over 24-3/4"	2	4	2	4	2	3	2	4	2	4	2	3	2	4	2	4	2	3	2	4	2	4	2	3
61"	under 24-15/16"	4	3	4	3	3	3	5	3	4	3	3	3	5	3	4	3	4	3	5	3	4	3	4	3
	24-15/16" thru 30-5/8" [3]	4	3	4	3	3	2	4	3	3	3	3	2	4	3	3	2	3	2	4	3	3	2	3	2
	30-9/16" (Equal Lite)	3	3	3	3	3	3	3	3	3	3	3	3	3	3	3	3	3	3	3	3	3	3	2	2
	over 30-9/16"	3	4	2	4	2	3	3	4	2	4	2	3	2	4	2	4	2	3	2	4	2	3	2	3
63"	under 25-3/4"	4	2	4	2	3	2	5	2	4	2	3	2	5	2	4	2	4	2	5	2	4	2	4	2
	25-3/4" thru 31-5/8" [3]	4	3	3	3	3	2	4	3	4	3	3	2	4	3	3	2	3	2	4	3	3	2	3	2
	31-9/16" (Equal Lite)	3	3	3	3	3	3	3	3	3	3	3	3	3	3	3	3	3	3	3	3	3	3	3	3
	over 31-9/16"	3	4	2	4	2	3	3	4	2	4	2	3	3	4	2	4	2	3	3	4	2	3	2	3
73"	under 29-3/4"	4	2	4	2	3	2	4	2	4	2	3	2	5	2	4	2	4	2	5	2	4	2	4	2
	29-3/4" thru 36-5/8" [3]	3	2	3	2	3	2	4	3	3	2	3	2	4	3	4	3	3	2	4	3	4	3	3	2
	36-9/16" (Equal Lite)	3	3	3	3	2	2	3	3	3	3	2	2	3	3	3	3	3	3	3	3	3	3	3	3
	over 36-9/16"	3	3	3	3	2	2	3	3	3	3	2	3	3	4	3	3	3	3	3	4	3	3	2	3
78"	under 31-3/4"	4	2	3	2	3	2	4	2	4	2	3	2	4	2	4	2	3	2	5	2	4	2	3	2
	31-3/4" thru 39" [3]	3	2	3	2	3	2	3	3	3	2	3	2	4	3	3	2	3	2	4	3	4	3	3	2
	39-1/16" (Equal Lite)	3	3	3	3	2	2	3	3	3	3	2	2	3	3	3	3	3	3	3	3	3	3	3	3

[1] Tip-to-tip dimensions for flange windows shown. For buck dimensions, subtract 1".

[2] Overall sash height. For clear daylight height, subtract 3-9/16".

[3] Size range includes the standard Pro-View (3-over-2 configuration) for the given Window Height.

"MR" refers to "Meeting Rail".

For overall sash width, subtract 2-15/16" from the buck dimension.

NOTES

1) USE THIS TABLE FOR ALL FLANGED WINDOWS PER THE ELEVATION ON SHEET 1. DIMENSIONS SHOWN ARE TIP-TO-TIP.

2) FOR FIN FRAMED WINDOWS, SEE NAIL PATTERN ON SHEET 1.

3) FOR SIZES NOT SHOWN, ROUND UP TO THE NEXT AVAILABLE WIDTH OR HEIGHT DIMENSION SHOWN ON THE TABLE.

4) REFER TO TABLE 5, SHEET 4 FOR ANCHOR GROUP DESCRIPTIONS.

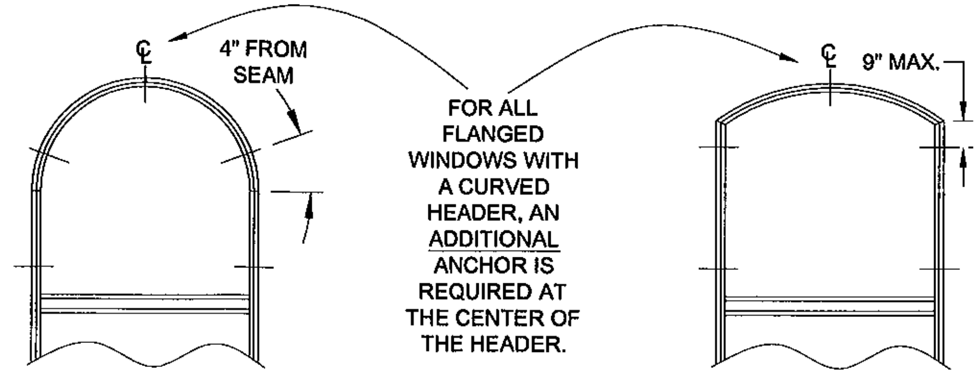

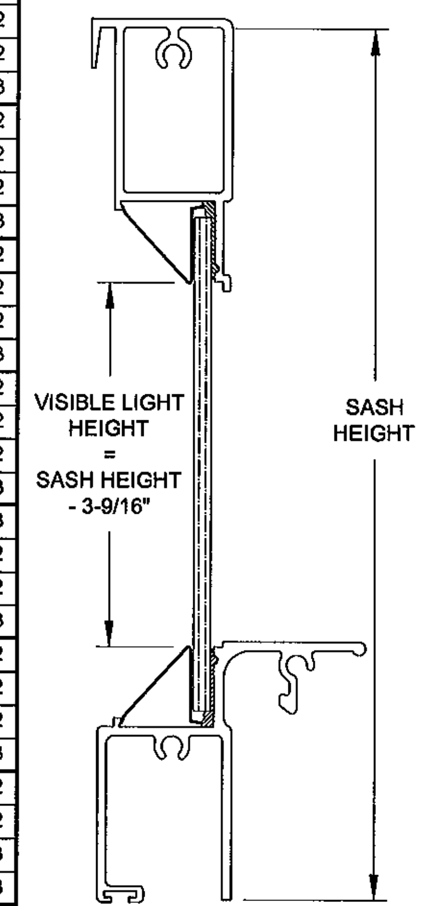

FIGURE A: SASH CROSS SECTION (WITH MONOLITHIC GLASS)

Approved as complying with the Florida Building Code
Date SEPT. 1, 2011
NOA# 11-0614.01
Miami Dade Product Control
By Manuel Perez

Drawn By: J ROSOWSKI
Drawn Date: 05/11/11
Revision:
Revision:
Revised By: Date:
Revised By: Date:

Description: ANCHOR SPACING

Title: SINGLE HUNG WINDOW INSTALLATION

Series/Model: SH-200 | Scale: NTS | Sheet: 6 OF 8 | Drawing No. MD-SH200-01 | Rev:

1070 TECHNOLOGY DRIVE
N. VENICE, FL 34275
P.O. BOX 1529
NOKOMIS, FL 34274
CERT. OF AUTH. #29296

ANTHONY LYNN MILLER ★ LICENSE No. 58705 ★ STATE OF FLORIDA PROFESSIONAL ENGINEER
A. LYNN MILLER, P.E.
P.E.# 58705

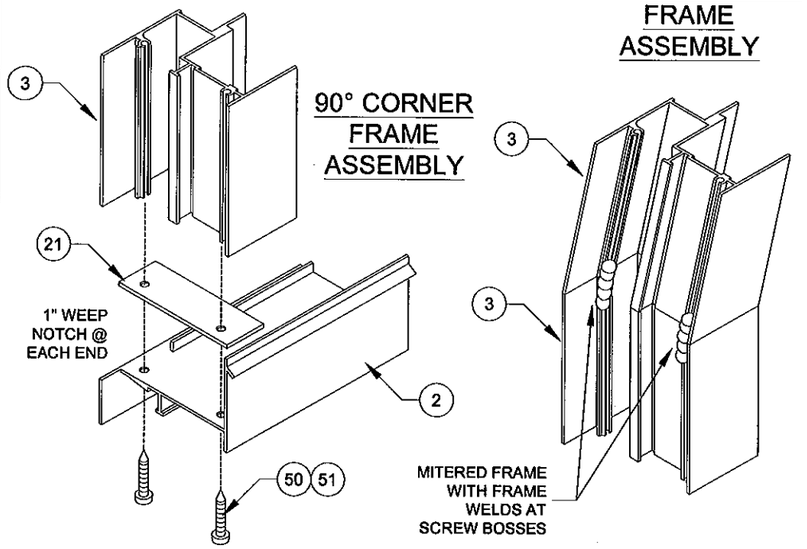

ASSEMBLY DETAILS FOR FLANGE FRAME CORNERS

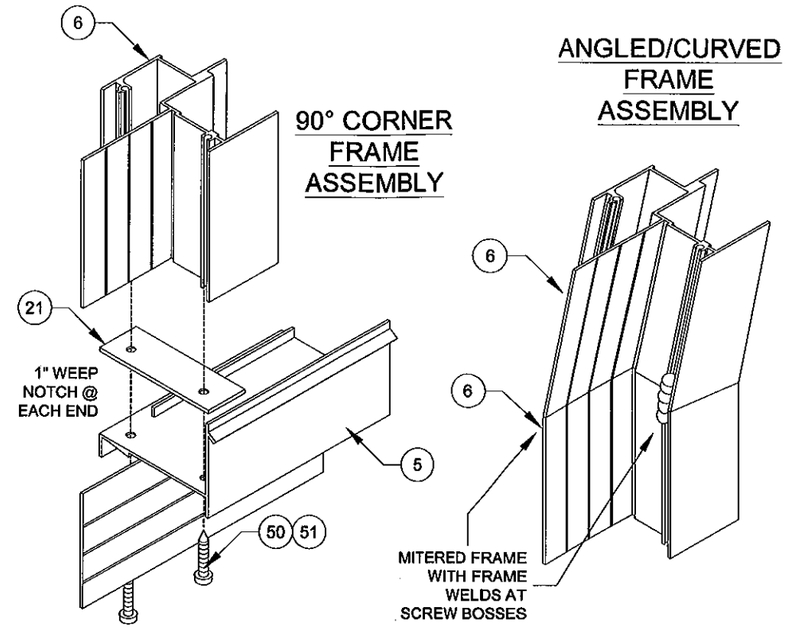

ASSEMBLY DETAILS FOR FIN FRAME CORNERS

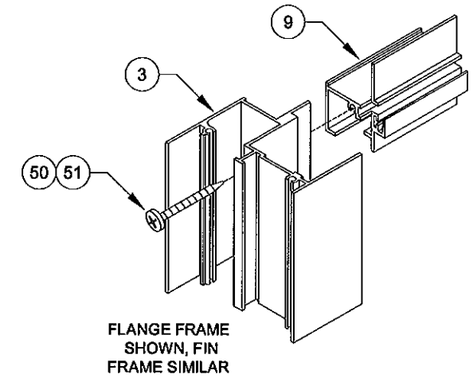

ASSEMBLY DETAILS FOR FRAME TO MEETING RAIL

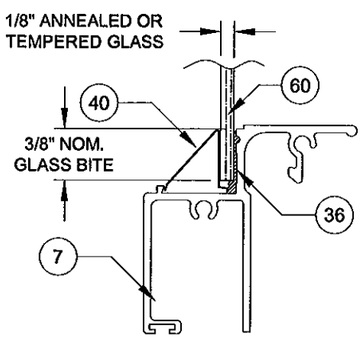

1/8" GLAZING DETAIL
GLASS TYPES A & B

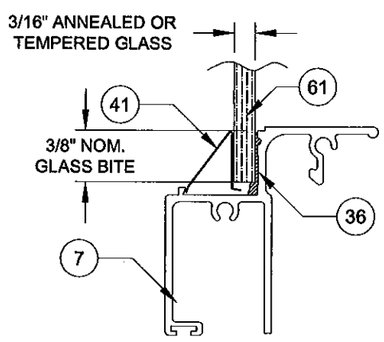

3/16" GLAZING DETAIL
GLASS TYPES C & D

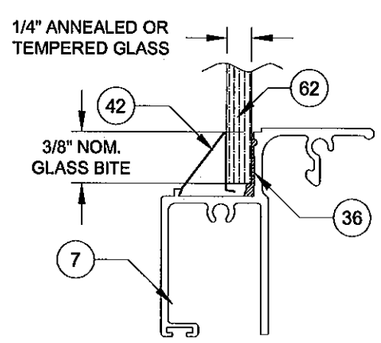

1/4" GLAZING DETAIL
GLASS TYPES E & F

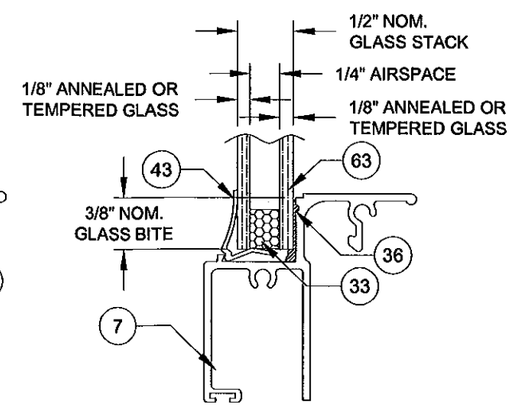

1/2" I.G. GLAZING DETAIL
GLASS TYPES G & I

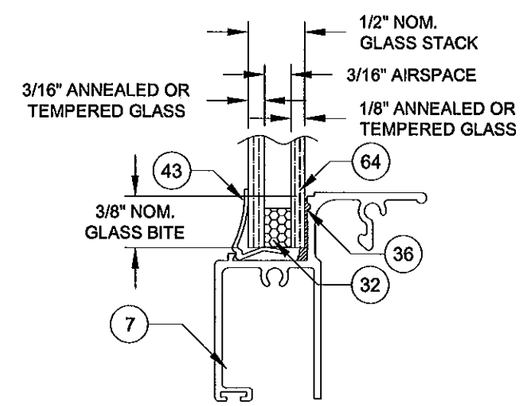

1/2" I.G. GLAZING DETAIL
GLASS TYPES H & J

Approved as complying with the Florida Buiding Code
Date SEPT. 1, 2011
NOA# 11-0614.01
Miami Dade Product Control
By Manuel Perez

Drawn By: J ROSOWSKI	Drawn Date: 05/11/11		
Revision:	Revision:		
Revised By:	Date:	Revised By:	Date:

Description: CORNER ASSEMBLY & GLASS DETAILS

Title: SINGLE HUNG WINDOW INSTALLATION

Series/Model: SH-200 | Scale: NTS | Sheet: 7 OF 8 | Drawing No. MD-SH200-01 | Rev:

PGT®
1070 TECHNOLOGY DRIVE
N. VENICE, FL 34275
P.O. BOX 1529
NOKOMIS, FL 34274
CERT. OF AUTH. #29296

ANTHONY LYNN MILLER ★ LICENSE No. 58705 STATE OF FLORIDA ★ PROFESSIONAL ENGINEER
9/24/11
A. LYNN MILLER, P.E.
P.E.# 58705

Item #	PGT Dwg. #	PGT Part #	Description
1	2703E	62703EW	Flange Frame Head
2	2751B	62751BW	Flange Frame Sill
3	2781	62781W	Flange Frame Jamb
4	2713	62713BW	Integral Fin Frame Head
5	2714E	62714EW	Integral Fin Frame Sill
6	2782	62782W	Integral Fin Frame Jamb
7	2706	62706DW	Sash Bottom Rail
8	2707	62707CW	Sash Top Rail
9	2739	62739W	Fixed Meeting Rail
10	2709	62709CW	Sash Side Rail
11	2740B	742740AW	Sash Bottom Lock
12	2785	62785W	Sash Stop
13	134	66615	Addon Flange
20	1226	61226DW	Vinyl Bulb, Flex PVC 70
21	1662C	71662CW	Head/Sill Gasket, Polyethelyne
22	1270	7PAD118	Open Cell Foam Pad
23	2772	72772SHK	Fixed Meeting Rail Plug Gasket, Rigid PVC
24	4066	64066G	Wstp.,187 X .230 Fin Seal
25	2784	72784W	Sash Side Rail Gasket, Polyethelyne
26	1078	7121UM	Balance Take-out Clip
27	Varies per Size		Balance
28	2711	42800W	Sash Cam, Nylon
29	1096	71096W	Sweep Latch, Zinc
30	1016	7858WW	#8 X .625 Ph. Fl. SMS Latch Screws
31	1267	71267N	Setting Block 1/8" x 1/2" x 1", EPDM
32		6DURAK316	Duraseal - 3/16"
33		6DURAK14	Duraseal - 1/4"
34			Sash Bottom Lock Spring
35			Screen Cloth, Fiberglass
36			Dow Corning 899 Silicone Glazing Sealant
40	1625	61625B	Glass Bead (1/8" Glass)
41	2719	62719B	Glass Bead (3/16" Glass)
42	1263	61263B	Glass Bead (1/4" Glass)
43	1253	6VT48B	Glass Bead (I.G.)
50		781PQA	#8 X 1" QUAD Pn SMS
51		781PSTX	#8 X 1" Sq. Pn Twin Fast SMS - 410 S.S.
52	1184	781LHPQA	#8-15 x 1 LH Twinfast Screw Zinc
53	1186	781LHPQX	#8-15 x 1 LH Twinfast Screw Zinc (S.S.)
54		78X1PFTFUA	#8 X 1" Ph Fl u/cut SMS
55		78X1FPAX	#8 X 1" Ph Fl - Stainless Steel
60			1/8" Annealed or Tempered Glass
61			3/16" Annealed or Tempered Glass
62			1/4" Annealed or Tempered Glass
63			1/8"- 1/4" Air - 1/8" An. or Temp. I.G.
64			1/8"- 3/16" Air - 3/16" An. or Temp. I.G.

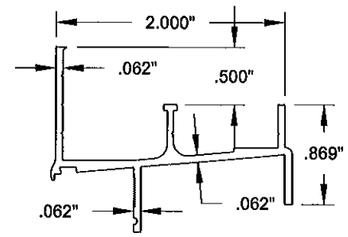

1 FLANGE FRAME HEAD 6063-T6 ALUMINUM

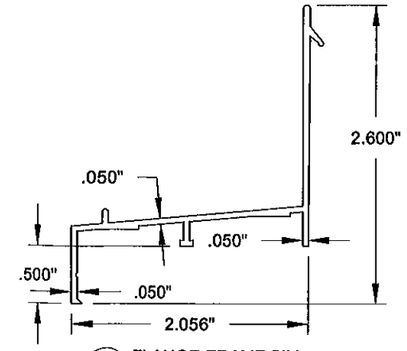

2 FLANGE FRAME SILL 6063-T6 ALUMINUM

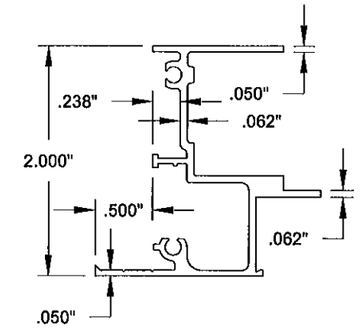

3 FLANGE FRAME JAMB 6063-T6 ALUMINUM

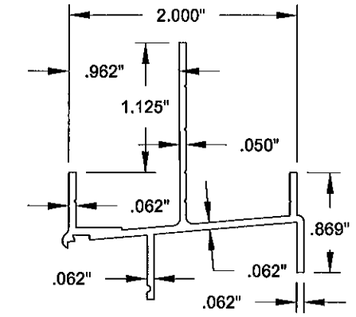

4 INTEGRAL FIN FRAME HEAD 6063-T5 ALUMINUM

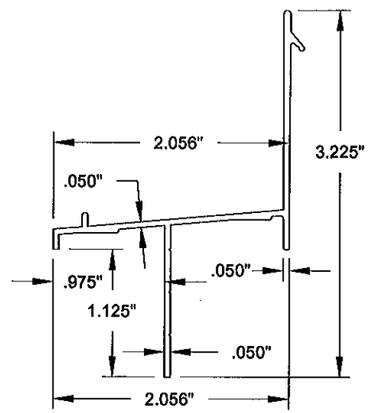

5 INTEGRAL FIN FRAME SILL 6063-T6 ALUMINUM

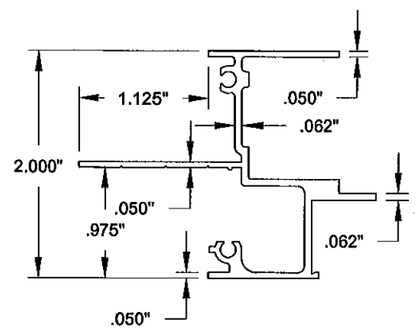

6 INTEGRAL FIN FRAME JAMB 6063-T6 ALUMINUM

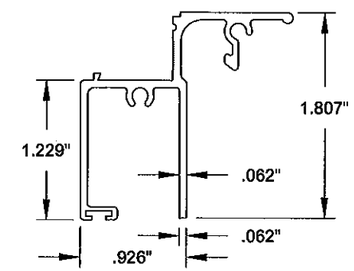

7 SASH BOTTOM RAIL 6063-T6 ALUMINUM

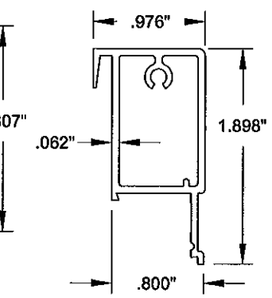

8 SASH TOP RAIL 6063-T6 ALUMINUM

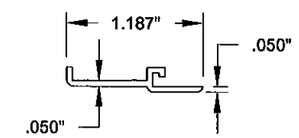

13 ADDON FLANGE 6063-T6 ALUMINUM

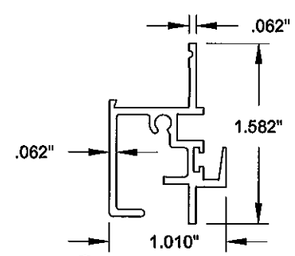

9 FIXED MEETING RAIL 6063-T6 ALUMINUM

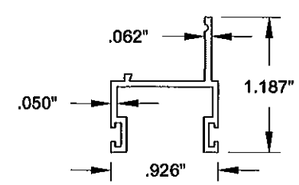

10 SASH SIDE RAIL 6063-T6 ALUMINUM

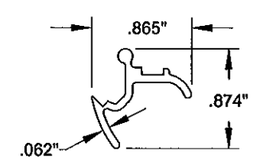

11 SASH BOTTOM LOCK RAIL 6063-T6 ALUMINUM

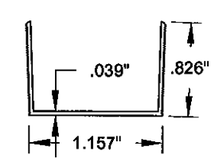

12 SASH STOP 6063-T5 ALUMINUM

ANTHONY LYNN MILLER
LICENSE
No. 58705
8/24/11
STATE OF FLORIDA
PROFESSIONAL ENGINEER
A. LYNN MILLER, P.E.
P.E.# 58705

PGT®
1070 TECHNOLOGY DRIVE
N. VENICE, FL 34275
P.O. BOX 1529
NOKOMIS, FL 34274
CERT. OF AUTH. #29296

Approved as complying with the Florida Building Code
Date SEPT. 1, 2011
NOA# 11-0614.01
Miami Dade Product Control
By

Revised By:	Date:	Revision:
Revised By:	Date:	Revision:

Description: BOM & PART DETAILS
Drawn By: J ROSOWSKI
Title: SINGLE HUNG WINDOW INSTALLATION
Date: 05/11/11
Series/Model: SH-200
Scale: NTS
Sheet: 8 OF 8
Drawing No. MD-SH200-01
Rev: