MIAMI-DADE COUNTY
BUILDING AND NEIGHBORHOOD COMPLIANCE DEPARTMENT (BNC)
BOARD AND CODE ADMINISTRATION DIVISION

MIAMI-DADE COUNTY
PRODUCT CONTROL SECTION
11805 SW 26 Street, Room 208
Miami, Florida 33175-2474
T (786) 315-2590 F (786) 315-2599
www.miamidade.gov/building

NOTICE OF ACCEPTANCE (NOA)

Gulfstream Aluminum and Shutter Corporation
3001 SE Gran Park Way
Stuart, Florida 34997

SCOPE:
This NOA is being issued under the applicable rules and regulations governing the use of construction materials. The documentation submitted has been reviewed and accepted by Miami-Dade County BNC-Product Control Section to be used in Miami Dade County and other areas where allowed by the Authority Having Jurisdiction (AHJ).

This NOA shall not be valid after the expiration date stated below. The Miami-Dade County Product Control Section (In Miami Dade County) and/or the AHJ (in areas other than Miami Dade County) reserve the right to have this product or material tested for quality assurance purposes. If this product or material fails to perform in the accepted manner, the manufacturer will incur the expense of such testing and the AHJ may immediately revoke, modify, or suspend the use of such product or material within their jurisdiction. BNC reserves the right to revoke this acceptance, if it is determined by Miami-Dade County Product Control Section that this product or material fails to meet the requirements of the applicable building code.

This product is approved as described herein, and has been designed to comply with the High Velocity Hurricane Zone of the Florida Building Code.

DESCRIPTION: **"Impact" Aluminum Bahama Shutter**

APPROVAL DOCUMENT: Drawing No. GSA001, titled " Aluminum Bahama Shutter (Impact) ", sheets 1 through 12 of 12, prepared by Certworks, LLC, dated July 12, 2011, signed and sealed by Alexis Spyrou, P.E., on July 19, 2011, bearing the Miami-Dade County Product Control Renewal stamp with the Notice of Acceptance number and the expiration date by the Miami-Dade County Product Control Section.

MISSILE IMPACT RATING: **Large and Small Missile Impact Resistant**

LABELING: Each unit shall bear a permanent label with the manufacturer's name or logo, city, state, the following statement: "Miami-Dade County Product Control Approved", and NOA number, per TAS-201, TAS-202, and TAS-203, unless otherwise noted herein.

RENEWAL of this NOA shall be considered after a renewal application has been filed and there has been no change in the applicable building code negatively affecting the performance of this product.

TERMINATION of this NOA will occur after the expiration date or if there has been a revision or change in the materials, use, and/or manufacture of the product or process. Misuse of this NOA as an endorsement of any product, for sales, advertising or any other purposes shall automatically terminate this NOA. Failure to comply with any section of this NOA shall be cause for termination and removal of NOA.

ADVERTISEMENT: The NOA number preceded by the words Miami-Dade County, Florida, and followed by the expiration date may be displayed in advertising literature. If any portion of the NOA is displayed, then it shall be done in its entirety.

INSPECTION: A copy of this entire NOA shall be provided to the user by the manufacturer or its distributors and shall be available for inspection at the job site at the request of the Building Official.
This NOA **renews NOA #09-0706.10** and consists of this page 1, evidence submitted pages E-1 & E-2 as well as approval document mentioned above.
The submitted documentation was reviewed by **Helmy A. Makar, P.E., M.S.**

MIAMI-DADE COUNTY APPROVED

Helmy A. Makar
08/04/2011

NOA No. 11-0621.02
Expiration Date: 05/06/2015
Approval Date: 08/04/2011

Gulfstream Aluminum and Shutter Corporation

NOTICE OF ACCEPTANCE: EVIDENCE SUBMITTED

1. EVIDENCE SUBMITTED UNDER PREVIOUS APPROVAL #00-0411.11

A. DRAWINGS

1. *Drawing No. 1001, titled " Impact Bahama Shutter ", prepared by W. W. Schaefer Engineering & Consulting, P.A., dated November 17, 2000, sheets 1 through 10 of 10, signed and sealed by Warren W. Schaefer, P.E.*

B. TESTS

1. *Test Report on: 1) Large Missile Impact Test, per PA-201*
   2) Cyclic Wind Pressure Test, per PA-203 and
   3) Uniform Static Air Pressure test per PA-202, of Bahama shutters, prepared by Hurricane Test Laboratory Inc., Report No. ***0205-1203-99****, dated February 28, 2000, signed and sealed by Vinu J. Abraham, P.E.*

C. CALCULATIONS

1. *Anchor analysis and calculations dated 03/29/2000, Pages I to 14, prepared by W. W. Schaefer Engineering & Consulting, P.A., signed and sealed by Warren W. Schaefer, P.E.*

D. MATERIAL CERTIFICATION

1. *Certified Tensile Test Report No. 0AM-142, prepared by QC Metallurgical Inc., dated 03/02/2000, per ASTM E8-93, signed and sealed by Frank Grate, P.E.*

2. EVIDENCE SUBMITTED UNDER PREVIOUS APPROVAL #04-0325.01

A. DRAWINGS

1. *Drawing No. 1001, titled "Impact Bahama Shutters", sheets 1 through 10 of 10, prepared by W. W. Schaefer Engineering & Consulting, P.A., dated November 17, 2000, signed and sealed by Warren W. Schaefer, P.E. on March 18, 2004*

B. TESTS

1. *None.*

C. CALCULATIONS

1. *None.*

D. QUALITY ASSURANCE

1. *By Miami-Dade County Building Code Compliance Office.*

E. MATERIAL CERTIFICATIONS

1. *None.*

Helmy A. Makar, P.E., M.S.
BNC, Product Control Unit Supervisor
NOA No. 11-0621.02
Expiration Date: 05/06/2015
Approval Date: 08/04/2011

NOTICE OF ACCEPTANCE: EVIDENCE SUBMITTED

3. EVIDENCE SUBMITTED UNDER PREVIOUS APPROVAL # 09-0706.10

A. DRAWINGS

1. *Drawing No. GSA001, titled " Aluminum Bahama Shutter (Impact) ", sheets 1 through 12 of 12, prepared by Certworks, LLC, dated September 28, 2009, last revision #A dated January 20, 2010, signed and sealed by Kristina S. Daugherty, P.E.*

B. TESTS

1. *None.*

C. CALCULATIONS

1. *Anchor analysis and calculations dated 09/28/2009, Pages 1 to 18, prepared by Certworks, LLC, signed and sealed by Kristina S. Daugherty, P.E.*

D. QUALITY ASSURANCE

1. *By Miami-Dade County Building Code Compliance Office.*

E. MATERIAL CERTIFICATIONS

1. *None.*

4. NEW EVIDENCE SUBMITTED

A. DRAWINGS

1. *Drawing No. GSA001, titled " Aluminum Bahama Shutter (Impact) ", sheets 1 through 12 of 12, prepared by Certworks, LLC, dated July 12, 2011, signed and sealed by Alexis Spyrou, P.E., on July 19, 201.*

B. TESTS

1. *Test Report on: 1) Large Missile Impact Test, per PA-201, 2) Cyclic Wind Pressure Test, per PA-203 and 3) Uniform Static Air Pressure test per PA-202, of Bahama shutters, prepared by Hurricane Test Laboratory Inc., Report No.* ***0205-0104-11****, dated May 17, 2011, signed and sealed by Vinu J. Abraham, P.E.*

C. CALCULATIONS

1. *None.*

D. QUALITY ASSURANCE

1. *By Miami-Dade County Building and Neighborhood Compliance Department.*

E. MATERIAL CERTIFICATIONS

1. *None.*

Helmy A. Makar, P.E., M.S.
BNC, Product Control Unit Supervisor
NOA No. 11-0621.02
Expiration Date: 05/06/2015
Approval Date: 08/04/2011

GULFSTREAM ALUMINUM & SHUTTER CORP.

ALUMINUM BAHAMA SHUTTER (IMPACT)

INSTALLATION NOTES:

1. MINIMUM EMBEDMENT AND EDGE DISTANCE EXCLUDE WALL FINISHES, INCLUDING BUT NOT LIMITED TO STUCCO, FOAM, BRICK VENEER, AND SIDING.
2. INSTALLATION ANCHORS AND ASSOCIATED HARDWARE MUST BE MADE OF CORROSION RESISTANT MATERIAL OR HAVE A CORROSION RESISTANT COATING.
3. FOR HOLLOW BLOCK AND GROUT FILLED BLOCK, DO NOT INSTALL INSTALLATION ANCHORS INTO MORTAR JOINTS. EDGE DISTANCE IS MEASURED FROM FREE EDGE OF BLOCK OR EDGE OF MORTAR JOINT INTO FACE SHELL OF BLOCK.
4. INSTALLATION ANCHORS SHALL BE INSTALLED IN ACCORDANCE WITH ANCHOR MANUFACTURER'S INSTALLATION INSTRUCTIONS, AND ANCHORS SHALL NOT BE USED IN SUBSTRATES WITH STRENGTHS LESS THAN THE MINIMUM STRENGTH SPECIFIED BY THE ANCHOR MANUFACTURER.
5. INSTALLATION ANCHOR CAPACITIES FOR PRODUCTS HEREIN ARE BASED ON SUBSTRATE MATERIALS WITH THE FOLLOWING PROPERTIES:
   A. WOOD - MINIMUM SPECIFIC GRAVITY OF 0.55.
   B. CONCRETE -MINIMUM COMPRESSIVE STRENGTH OF 3000 PSI.
   C. MASONRY - STRENGTH CONFORMANCE TO ASTM C-90, GRADE N, TYPE 1 (OR GREATER).
6. EACH SHUTTER SHALL HAVE A LEGIBLE & READILY VISIBLE MARKING INSTRUCTING THE OWNER/TENANT TO SECURE THE SHUTTER WITH BRACKETS & STORM BARS,PER THESE APPROVED DRAWINGS DURING PERIODS OF HURRICANE WARNING.
7. EACH SHUTTER SHALL BE PERMANENTLY MARKED AS FOLLOWS:
   GULFSTREAM ALUMINUM & SHUTTER CORP.
   STUART, FL
   MIAMI-DADE COUNTY PRODUCT CONTROL APPROVED

GENERAL NOTES:

1. THE PRODUCT SHOWN HEREIN IS DESIGNED AND MANUFACTURED TO COMPLY WITH THE 2007 FLORIDA BUILDING CODE (FBC), INCLUDING HVHZ AND HAS BEEN EVALUATED ACCORDING TO THE FOLLOWING:
   - TAS 201-94
   - TAS 202-94
   - TAS 203-94
2. ADEQUACY OF THE EXISTING STRUCTURAL CONCRETE/MASONRY AND 2X FRAMING AS A MAIN WIND FORCE RESISTING SYSTEM CAPABLE OF WITHSTANDING AND TRANSFERRING APPLIED PRODUCT LOADS TO THE FOUNDATION IS THE RESPONSIBILITY OF THE ENGINEER OR ARCHITECT OF RECORD FOR THE PROJECT OF INSTALLATION.
3. 1X AND 2X BUCKS (WHEN USED) SHALL BE DESIGNED AND ANCHORED TO PROPERLY TRANSFER ALL LOADS TO THE STRUCTURE. BUCK DESIGN AND INSTALLATION IS THE RESPONSIBILITY OF THE ENGINEER OR ARCHITECT OF RECORD FOR THE PROJECT OF INSTALLATION.
4. THE INSTALLATION DETAILS DESCRIBED HEREIN ARE GENERIC AND MAY NOT REFLECT ACTUAL CONDITIONS FOR A SPECIFIC SITE. IF SITE CONDITIONS CAUSE INSTALLATION TO DEVIATE FROM THE REQUIREMENTS DETAILED HEREIN, A LICENSED ENGINEER OR ARCHITECT SHALL PREPARE SITE SPECIFIC DOCUMENTS FOR USE WITH THIS DOCUMENT.
5. SHUTTER MATERIAL: ALUMINUM 6063-T6
6. THESE SHUTTER SYSTEMS HAVE BEEN TESTED, ANALYZED & APPROVED FOR WIND PRESSURES NOT TO EXCEED THOSE SHOWN IN THE LOAD TABLES ON SHEET 12.

TABLE OF CONTENTS

SHEET	REVISION	SHEET DESCRIPTION
1	A	INSTALLATION & GENERAL NOTES
2	-	ELEVATIONS
3	-	ELEVATIONS
4	-	VERTICAL SECTIONS
5	-	VERTICAL SECTIONS
6	A	VERTICAL SECTIONS
7	A	VERTICAL SECTIONS
8	-	HORIZONTAL SECTIONS & DETAILS
9	-	DETAILS
10	A	BILL OF MATERIALS & COMPONENTS
11	A	COMPONENTS
12	-	PRESSURE LOAD TABLES

MAX. DESIGN PRESSURE RATING	
+80.0 / -80.0 PSF	SMALL AND LARGE MISSILE IMPACT RATED

PRODUCT RENEWED
is complying with the Florida
Building Code
Acceptance No 11-0621.02
Expiration Date 05/06/2015
By
Miami Dade Product Control

GULFSTREAM ALUMINUM & SHUTTER CORPORATION
3001 S.E. GRAN PARK WAY
STUART, FLORIDA 34997
PH: (800) 244-4143 FX: (772) 287-9740

TITLE: BAHAMA SHUTTER INSTALLATION & GENERAL NOTES

PREPARED BY:
CERTWORKS, LLC
127 W. FAIRBANKS AVE., STE. 438
WINTER PARK, FL 32789
PH: (407) 644-6957 FX: (407) 644-2366

REVISIONS

NO.	DESCRIPTION	BY	DATE
A	REVISED PER MD COMMENTS	MS	01.20.10

7-19-11

ALEXIS SPYROU
FLORIDA P. E. NO. 68101
127 W. FAIRBANKS AVE., STE. 438
WINTER PARK, FL 32789
FBPE CERT. OF AUTHORIZATION NO. 26520

DATE: 7.12.11 | DWN BY: JLR | CHK BY: KSD | SCALE: NTS

DWG #: GSA001

SHEET: 1 OF 12

7/12/2011 1:57 PM

p:\projects\gulfstream aluminum\md-p-09-05121 (bahamian shutter)\dwgs\ss\gsa001 bahama shutter (ins).dwg

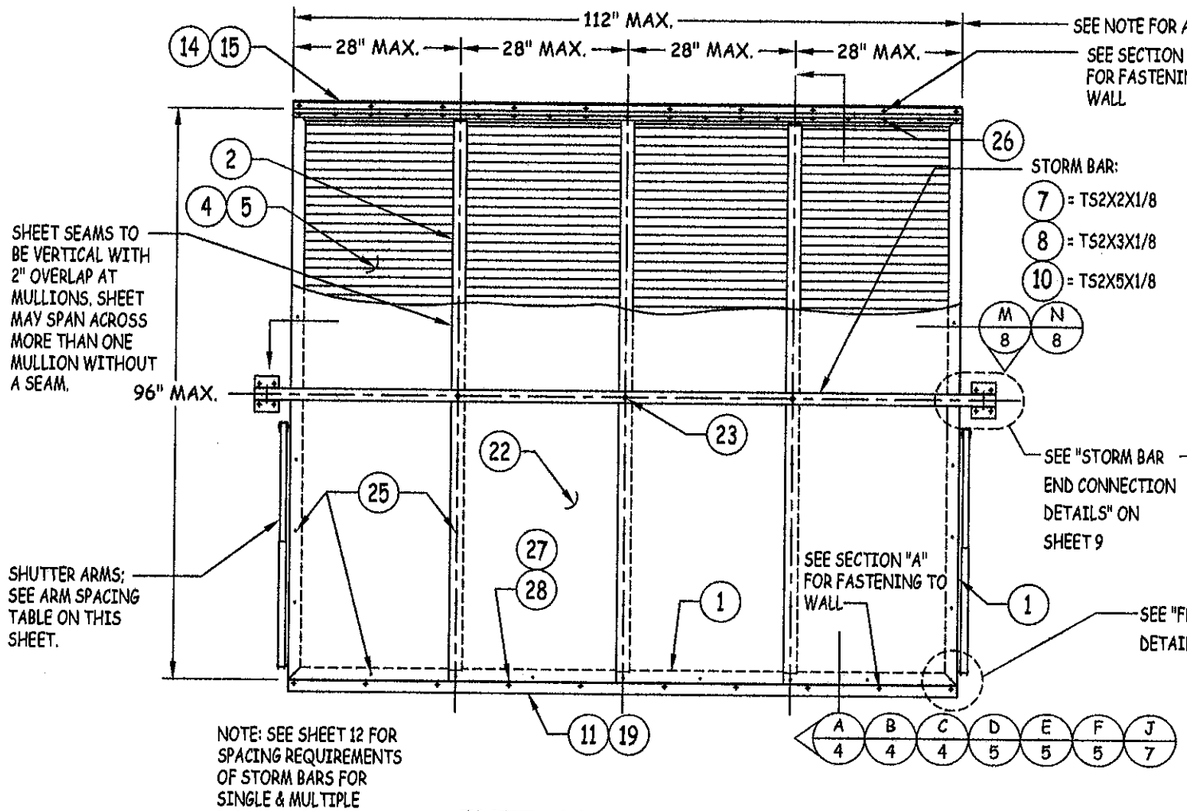

EXTERIOR ELEVATION
QUAD PANEL SHUTTER

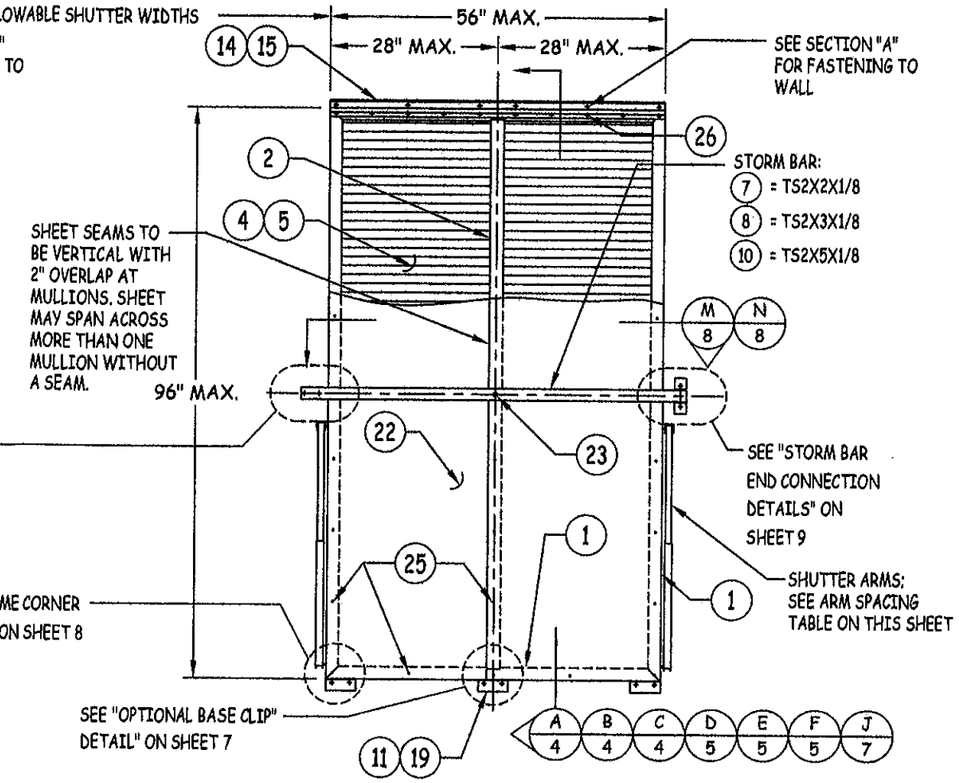

EXTERIOR ELEVATION
DOUBLE PANEL SHUTTER

NOTE: THE NUMBER OF PANELS IS GOVERNED BY:

1. IF STORM BARS ARE REQUIRED, ANY NUMBER OF PANELS MAY BE USED PROVIDING THE OVERALL SHUTTER WIDTH DOES NOT EXCEED 112" & THE PANEL WIDTHS DO NOT EXCEED 28".

2. IF NO STORM BARS ARE REQUIRED, ANY NUMBER OF PANELS MAY BE USED & THE SHUTTER OVERALL WIDTH MAY BE INFINITE PROVIDING THE PANEL WIDTHS DO NOT EXCEED 28".

STORM BAR NOTE: THE NUMBER OF STORM BARS REQUIRED WITH EACH SHUTTER TYPICALLY VARIES FROM 1 TO 3 & IS DEPENDENT ON SHUTTER SIZE & REQUIRED DESIGN PRESSURE. SEE ELEVATION SKETCHES & LOAD TABLES ON SHEET 12 FOR STORM BAR REQUIREMENTS.

ARM SPACING TABLE	
SHUTTER HEIGHT	MAXIMUM SPACING
48" OR LESS	56"
49" < h < 60"	45"
61" < h < 72"	38"
73" < h < 84"	32"
85" < h < 96"	28"

NOTE: ALL 2 PANEL SHUTTERS REQUIRE ONLY 1 ARM AT EACH SIDE

PRODUCT RENEWED
as complying with the Florida Building Code
Acceptance No 11-0621.02
Expiration Date 05/06/2015
By [signature]
Miami Dade Product Control

Gulfstream
GULFSTREAM ALUMINUM & SHUTTER CORPORATION
3001 S.E. GRAN PARK WAY
STUART, FLORIDA 34997
PH: (800) 244-4143 FX: (772) 287-9740

TITLE: BAHAMA SHUTTER ELEVATIONS

PREPARED BY:
CERTWORKS, LLC
127 W. FAIRBANKS AVE., STE. 438
WINTER PARK, FL 32789
PH: (407) 644-6957 FX: (407) 644-2366

REVISIONS

NO.	DESCRIPTION	BY	DATE

ALEXIS SKYROU
FLORIDA P.E. NO. 68101
127 W. FAIRBANKS AVE., STE. 438
WINTER PARK, FL 32789
FBPE CERT. OF AUTHORIZATION NO. 28520

77971

DATE: 7.11.11 | DWN BY: JLR | CHK BY: KSD | SCALE: NTS

DWG #: GSA001

SHEET: 2 OF 12

7/12/2011 12:30 PM

p:\projects\gulfstream aluminum\md-p-09-0512.1 (bahamian shutter)\dwgs\gsa001 bahama shutter (lmi).dwg

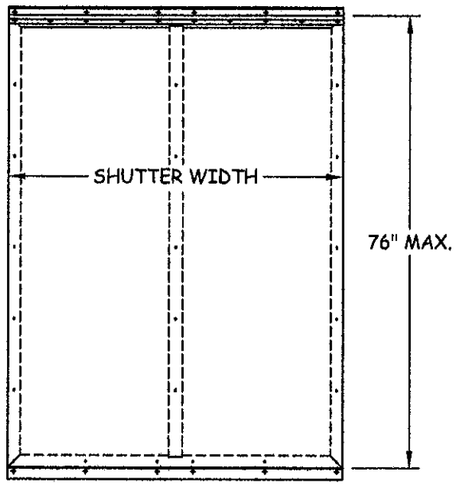

NO BARS
(SINGLE SPAN SHUTTER)

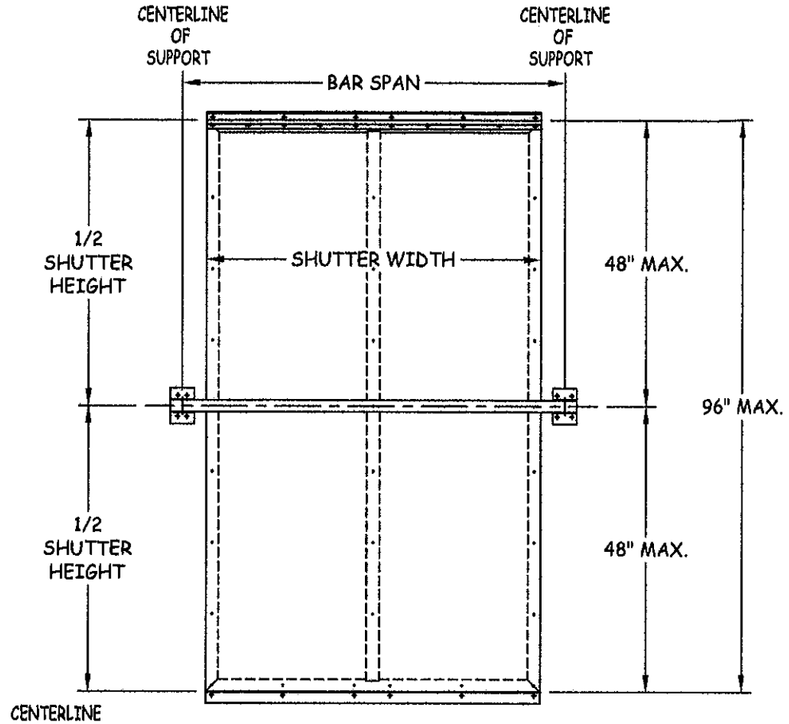

SINGLE BAR
(TWO SPAN SHUTTER)

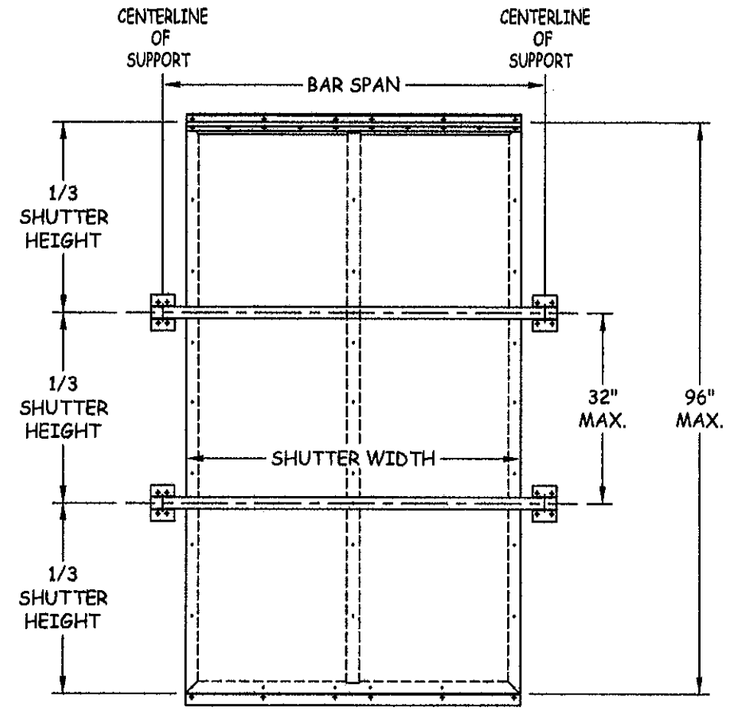

TWO BARS
(THREE SPAN SHUTTER)

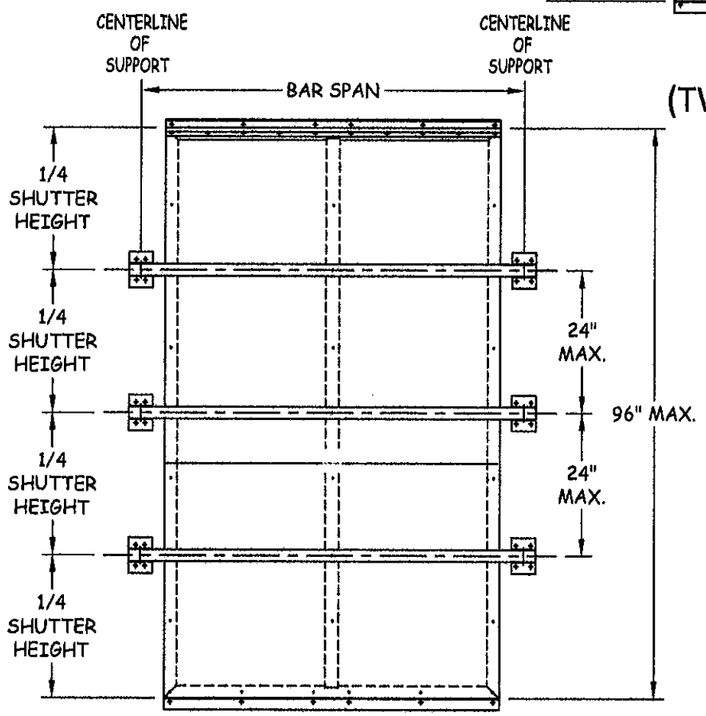

THREE BARS
(FOUR SPAN SHUTTER)

ALLOWABLE PRESSURE TABLE FOR SINGLE SPAN SHUTTERS		
SHUTTER HEIGHT	PRESSURE (PSF)	
	POS	NEG
60" OR LESS	80.0	80.0
62"	73.0	76.2
64"	64.3	71.7
66"	56.9	67.4
68"	50.5	63.5
70"	44.9	58.8
72"	40.1	52.5
74"	36.0	46.3
76"	32.3	40.0

NOTE:

1. ALL SHUTTERS MUST BE PLACED A MIN. DISTANCE OF 2.25" AWAY FROM THE GLASS.

Gulfstream
GULFSTREAM ALUMINUM & SHUTTER CORPORATION
3001 S.E. GRAN PARK WAY
STUART, FLORIDA 34997
PH: (800) 244-4143 FX: (772) 287-9740

TITLE: BAHAMA SHUTTER ELEVATIONS

PREPARED BY:
CERTWORKS, LLC
127 W. FAIRBANKS AVE., STE. 438
WINTER PARK, FL 32789
PH: (407) 644-6957 FX: (407) 644-2366

REVISIONS

NO.	DESCRIPTION	BY	DATE

ALEXIS SEPYROU
FLORIDA P. ENG. 68101
127 W. FAIRBANKS AVE., STE. 438
WINTER PARK, FL 32789
FBPE CERT. OF AUTHORIZATION NO. 28520

7-19-11

PRODUCT RENEWED
as complying with the Florida Building Code
Acceptance No 11-0621.02
Expiration Date 05/06/2015
By [signature]
Miami Dade Product Control

DATE: 7.11.11
DWN BY: JLR
CHK BY: KSD
SCALE: NTS
DWG #: GSA001
SHEET: 3 OF 12

7/12/2011 12:10 PM
p:\projects\gulfstream aluminum\md-p-09-0512.1 (bahamian shutter)\dwgs\ss\gsa001 bahama shutter (fmi).dwg

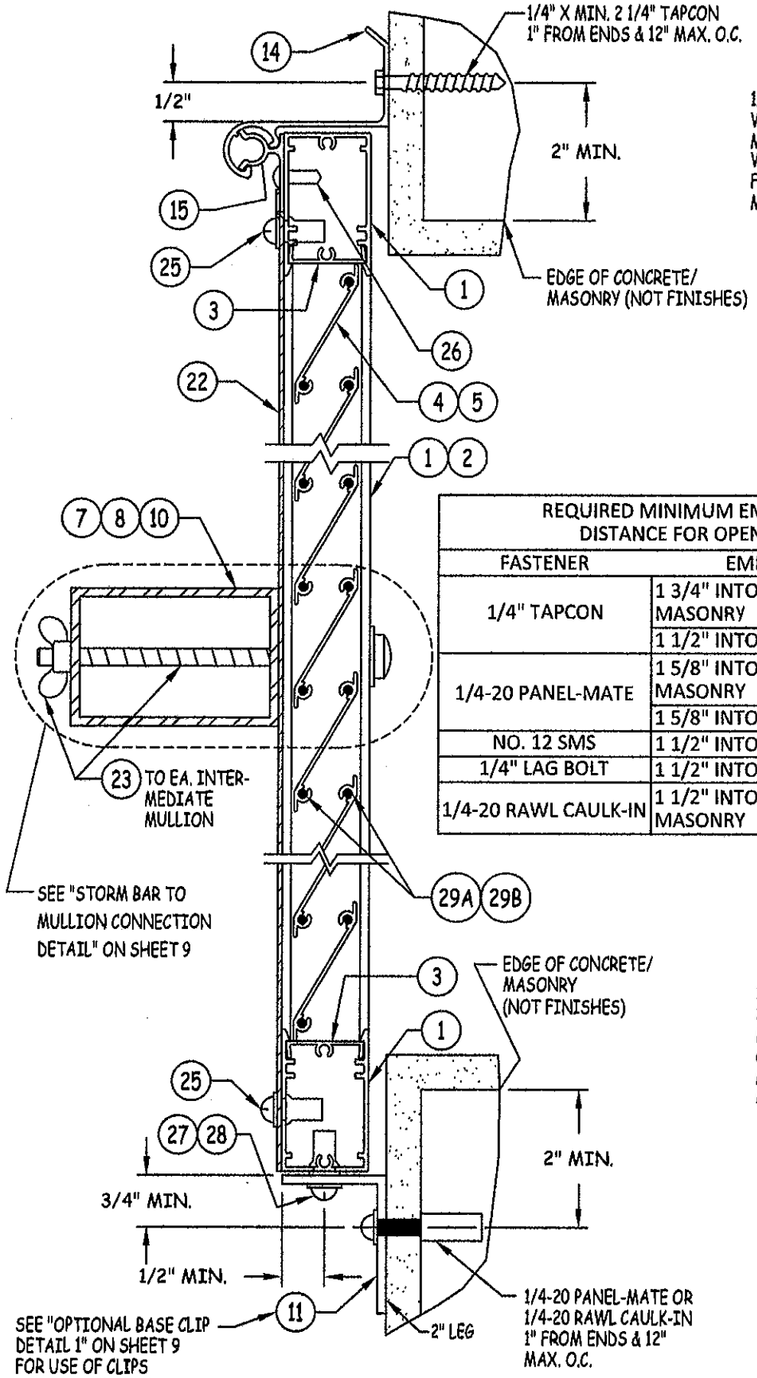

A/4 **VERTICAL SECTION**

FACE MOUNT ONTO CONCRETE/MASONRY

REQUIRED MINIMUM EMBEDMENTS & EDGE DISTANCE FOR OPENING FASTENERS		
FASTENER	EMBEDMENT	EDGE DISTANCE
1/4" TAPCON	1 3/4" INTO CONCRETE/ MASONRY	SEE DETAILS
	1 1/2" INTO 2X WOOD FRAME	3/4"
1/4-20 PANEL-MATE	1 5/8" INTO CONCRETE/ MASONRY	SEE DETAILS
	1 5/8" INTO 2X WOOD FRAME	3/4"
NO. 12 SMS	1 1/2" INTO 2X WOOD FRAME	3/4"
1/4" LAG BOLT	1 1/2" INTO 2X WOOD FRAME	3/4"
1/4-20 RAWL CAULK-IN	1 1/2" INTO CONCRETE/ MASONRY	SEE DETAILS

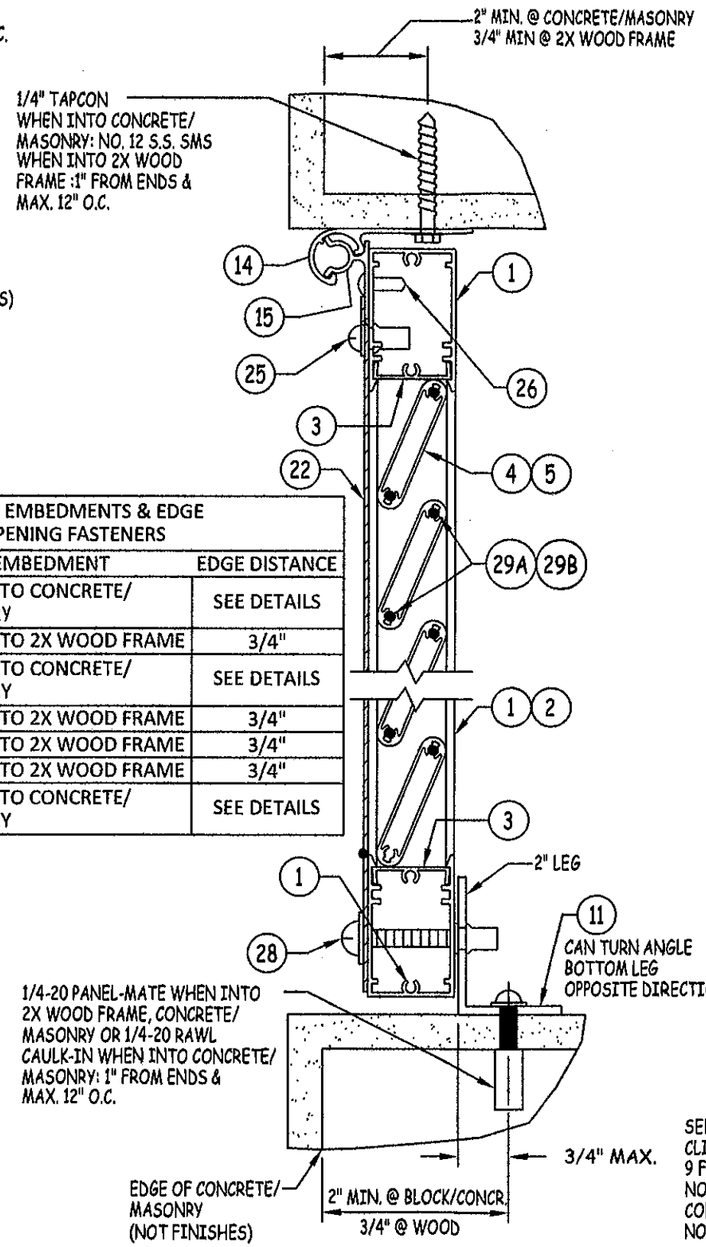

B/4 **VERTICAL SECTION**

RECESS MOUNT ONTO CONCRETE/MASONRY OR 2X WOOD FRAME

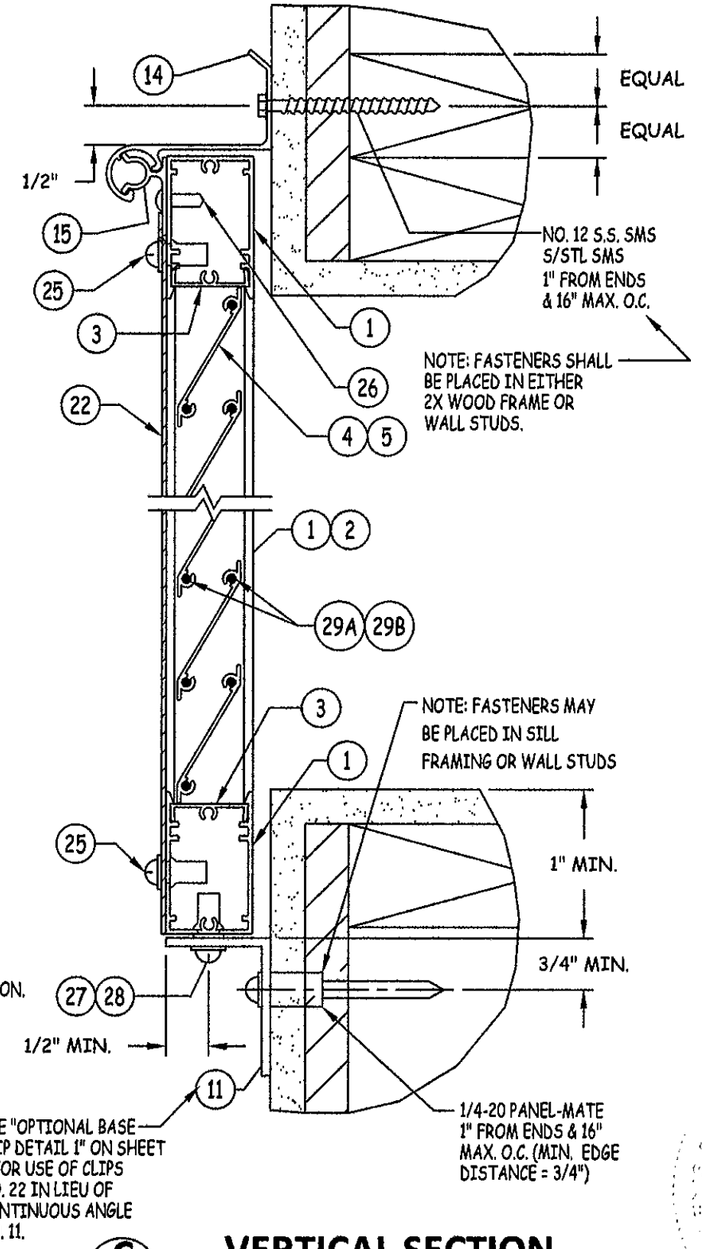

C/4 **VERTICAL SECTION**

FACE MOUNT ONTO 2X WOOD FRAME

PRODUCT RENEWED
as complying with the Florida
Building Code
Acceptance No 11-0621.02
Expiration Date 05/06/2015
By
Miami Dade Product Control

Gulfstream

GULFSTREAM ALUMINUM &
SHUTTER CORPORATION
3001 S.E. GRAN PARK WAY
STUART, FLORIDA 34997
PH: (800) 244-4143 FX: (772) 287-9740

TITLE:
BAHAMA SHUTTER
VERTICAL SECTIONS

PREPARED BY:
CERTWORKS, LLC
127 W. FAIRBANKS AVE., STE. 438
WINTER PARK, FL 32789
PH: (407) 644-6957 FX: (407) 644-2366

REVISIONS

NO.	DESCRIPTION	BY	DATE

ALEXIS GRYCZU
FLORIDA P.E. NO. 56101
127 W. FAIRBANKS AVE. STE 438
WINTER PARK, FL 32789
FBPE CERT. OF AUTHORIZATION NO. 26520

DATE: 7.11.11	DWN BY: JLR	CHK BY: KSD	SCALE: NTS

DWG #: GSA001

SHEET: 4 OF 12

7/12/2011 12:30 PM

p:\projects\gulfstream aluminum\std-p-09-0512.1 (bahamian shutter)\dwgs\sas\gsa001 bahama shutter (lim).dwg

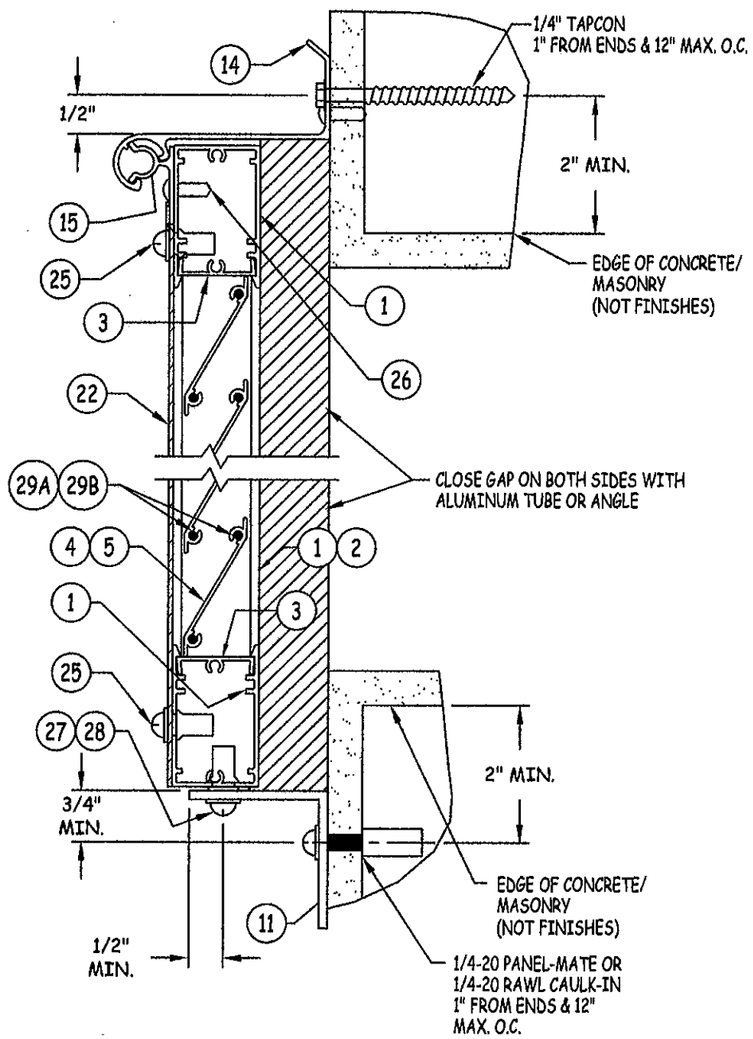

D/5 **VERTICAL SECTION**

BUILD-OUT MOUNT ONTO CONCRETE/MASONRY

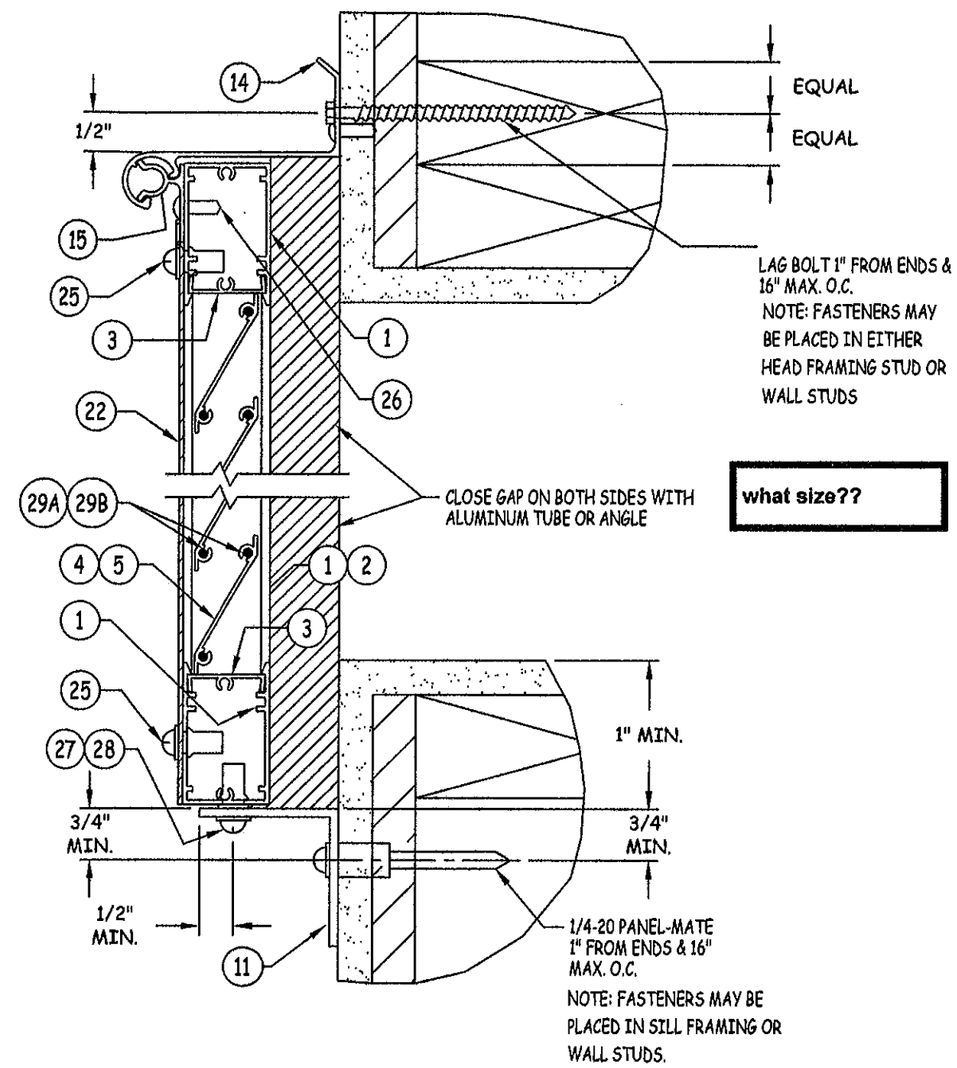

what size??

E/5 **VERTICAL SECTION**

BUILD-OUT MOUNT ONTO 2X WOOD FRAME

FOR FASTENER EDGE DISTANCE & SPACING REQUIREMENTS, SEE SHEET 4.

PRODUCT RENEWED
as complying with the Florida
Building Code
Acceptance No 11-0621.02
Expiration Date 05/06/2015
By [signature]
Miami Dade Product Control

Gulfstream
GULFSTREAM ALUMINUM &
SHUTTER CORPORATION
3001 S.E. GRAN PARK WAY
STUART, FLORIDA 34997
PH: (800) 244-4143 FX: (772) 287-9740

TITLE:
BAHAMA SHUTTER
VERTICAL SECTIONS

PREPARED BY:
CERTWORKS, LLC
127 W. FAIRBANKS AVE., STE. 438
WINTER PARK, FL 32789
PH: (407) 644-6957 FX: (407) 644-2366

REVISIONS

NO.	DESCRIPTION	BY	DATE

ALEXIS SPYROU
FLORIDA P.E. NO. 68101
127 W. FAIRBANKS AVE., STE. 438
WINTER PARK, FL 32789
FBPE CERT. OF AUTHORIZATION NO. 28520

7-19-11

DATE: 7.11.11
DWN BY: JLR
CHK BY: KSD
SCALE: NTS

DWG #: GSA001

SHEET: 5 OF 12

7/12/2011 12:11 PM

p:\projects\gulfstream aluminum\md-p-09-0512.1 (bahamian shutter)\dwgs\as\gsa001 bahama shutter (lmi).dwg

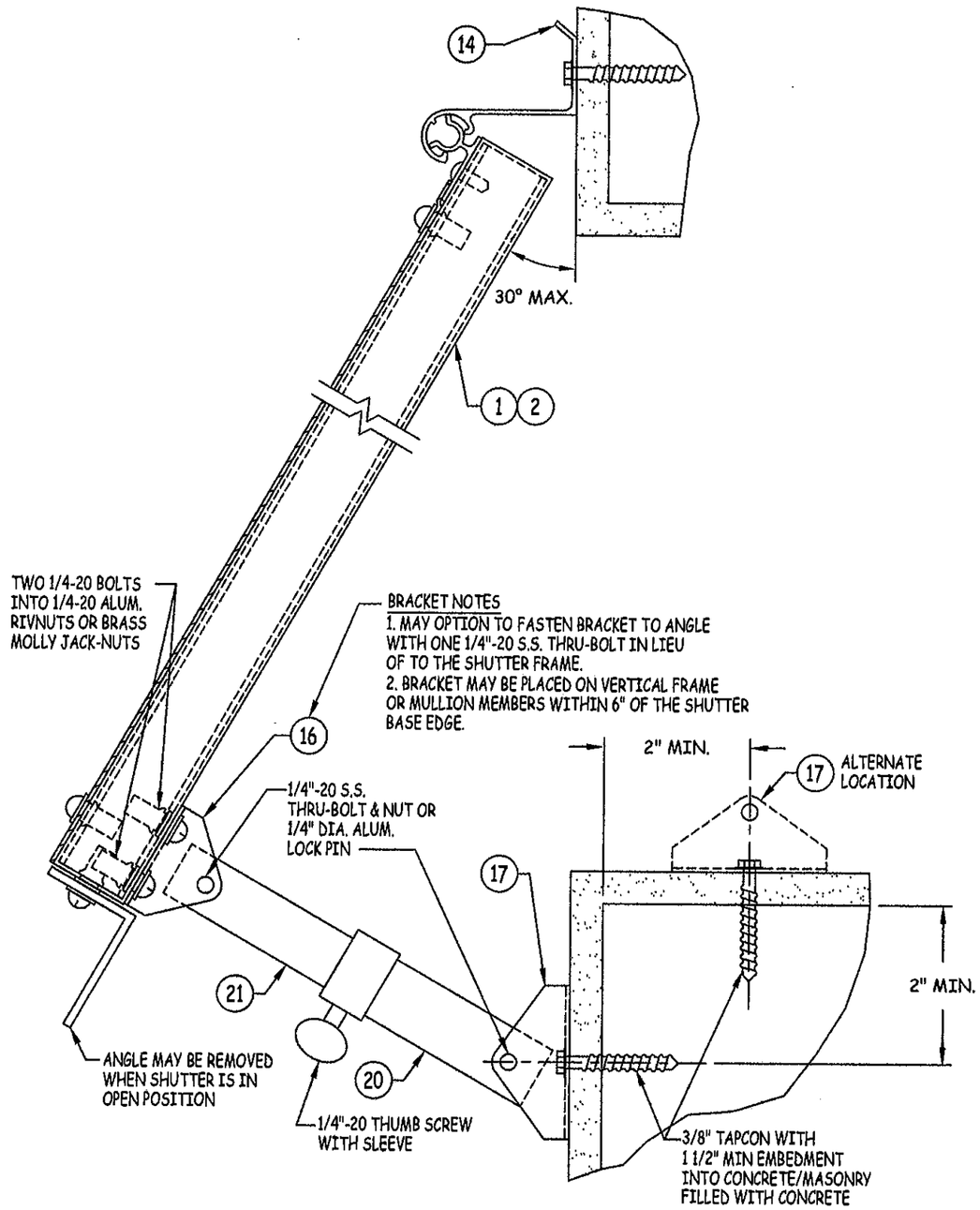

BRACKET NOTES
1. MAY OPTION TO FASTEN BRACKET TO ANGLE WITH ONE 1/4"-20 S.S. THRU-BOLT IN LIEU OF TO THE SHUTTER FRAME.
2. BRACKET MAY BE PLACED ON VERTICAL FRAME OR MULLION MEMBERS WITHIN 6" OF THE SHUTTER BASE EDGE.

F/6 VERTICAL SECTION

OPEN SHUTTER AT FACE MOUNT CONDITION TO CONCRETE/MASONRY

FOR FASTENER EDGE DISTANCE & SPACING REQUIREMENTS, SEE SHEET 4.

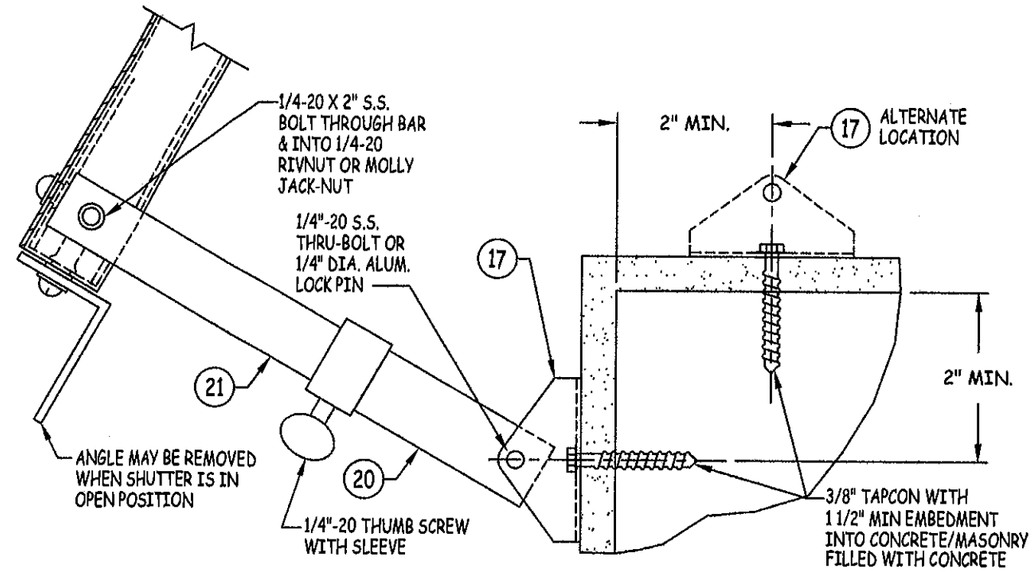

H/6 VERTICAL SECTION

ALTERNATE SECTION TO F/6 (END ARMS ONLY)

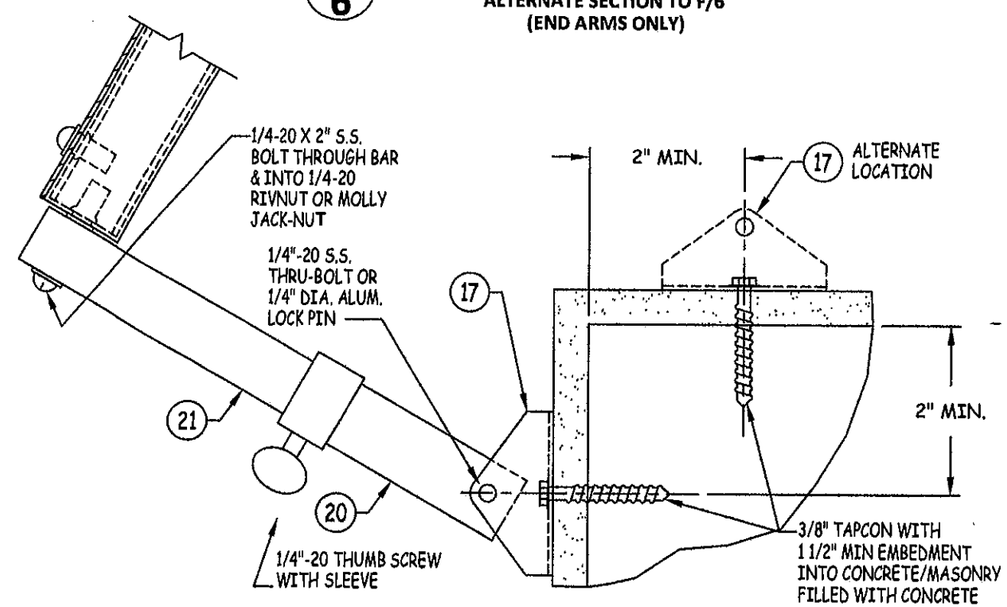

G/6 VERTICAL SECTION

ALTERNATE SECTION TO F/6

PRODUCT RENEWED as complying with the Florida Building Code
Acceptance No 11-0621.02
Expiration Date 05/06/2015
By [signature]
Miami Dade Product Control

Gulfstream
GULFSTREAM ALUMINUM & SHUTTER CORPORATION
3001 S.E. GRAN PARK WAY
STUART, FLORIDA 34997
PH: (800) 244-4143 FX: (772) 287-9740

TITLE: BAHAMA SHUTTER VERTICAL SECTIONS

PREPARED BY:
CERTWORKS, LLC
127 W. FAIRBANKS AVE., STE. 438
WINTER PARK, FL 32789
PH: (407) 644-6957 FX: (407) 644-2366

REVISIONS

NO.	DESCRIPTION	BY	DATE
A	REVISED PER MD COMMENTS	MS	01.20.10

ALEXIS SPYROS
FLORIDA P. E. NO. 68101
127 W. FAIRBANKS AVE. STE. 438
WINTER PARK, FL 32789
FBPE CERT. OF AUTHORIZATION NO. 28520

7-19-11

DATE: 7.11.11 | DWN BY: JLR | CHK BY: KSD | SCALE: NTS

DWG #: GSA001

SHEET: 6 OF 12

7/12/2011 12:11 PM
p:\projects\gulfstream aluminum\mid-p-09-0512.1 (bahamian shutter)\dwgs\as\gsa001 bahama shutter (lmi).dwg

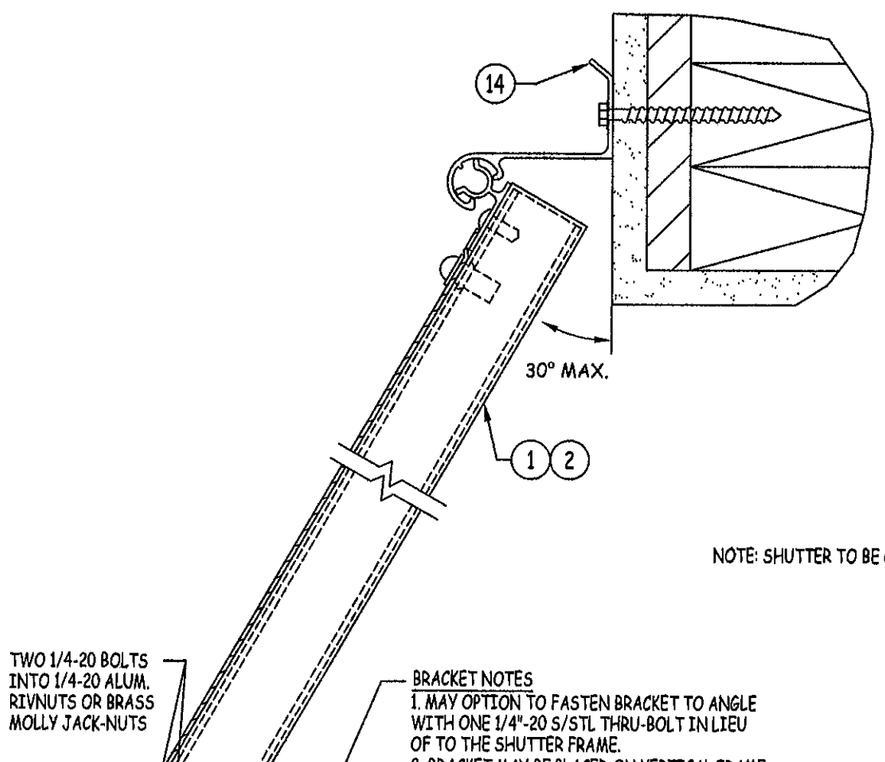

NOTE: SHUTTER TO BE CLOSED DURING HURRICANE WINDS

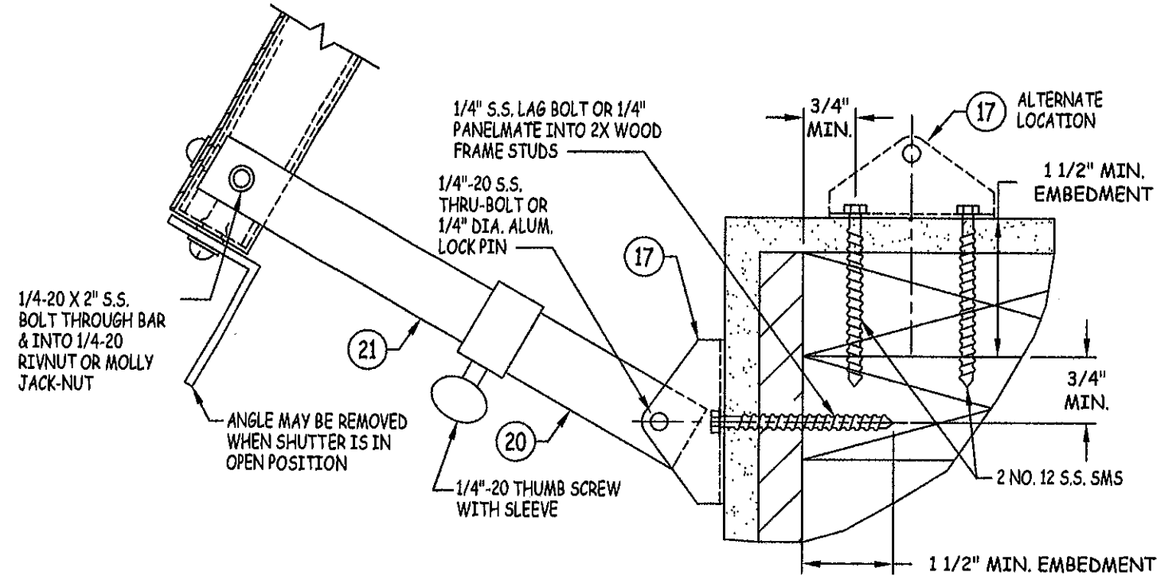

L/7 VERTICAL SECTION

ALTERNATE SECTION TO J/7
(END ARMS ONLY)

NOTE: SEE "ARM SPACING TABLE" ON SHEET 2 FOR SPACING OF ARMS

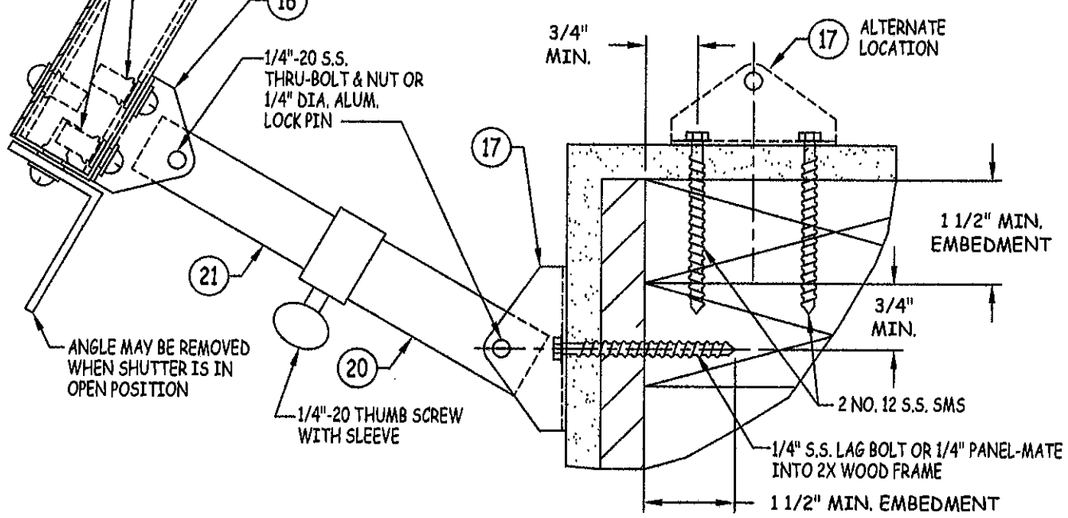

J/7 VERTICAL SECTION

OPEN SHUTTER AT FACE MOUNT CONDITION TO 2X WOOD FRAME

NOTE: SEE "ARM SPACING TABLE" ON SHEET 2 FOR SPACING OF ARMS

FOR FASTENER EDGE DISTANCE & SPACING REQUIREMENTS, SEE SHEET 4.

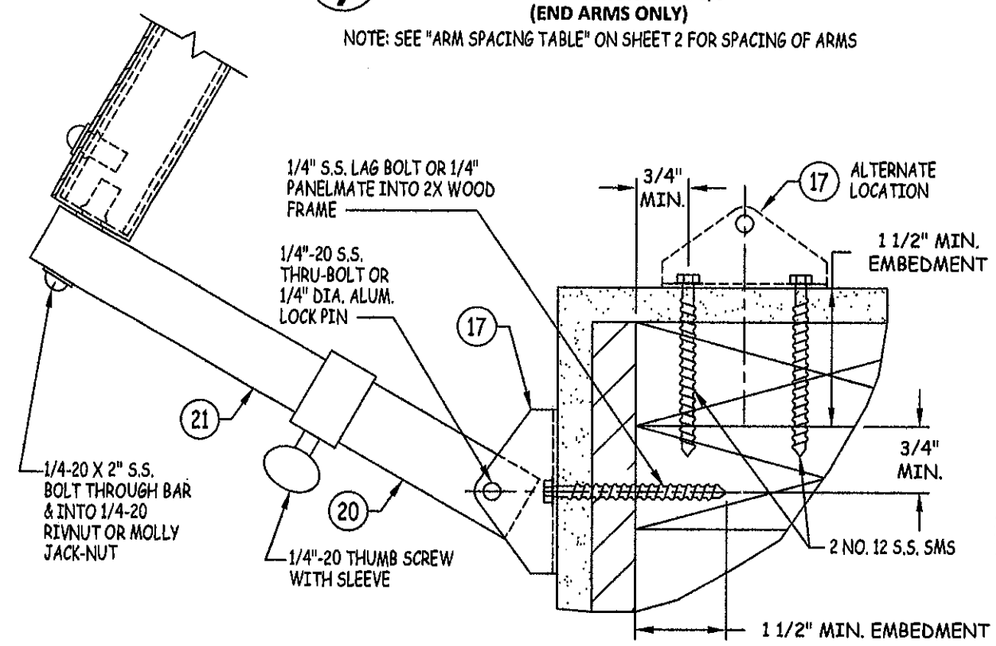

K/7 VERTICAL SECTION

ALTERNATE SECTION TO J/7

NOTE: SEE "ARM SPACING TABLE" ON SHEET 2 FOR SPACING OF ARMS

PRODUCT RENEWED as complying with the Florida Building Code
Acceptance No 11-0621.02
Expiration Date 05/06/2015
By Miami Dade Product Control

Gulfstream Aluminum & Shutter Corporation
GULFSTREAM ALUMINUM & SHUTTER CORPORATION
3001 S.E. GRAN PARK WAY
STUART, FLORIDA 34997
PH: (800) 244-4143 FX: (772) 287-9740

TITLE: BAHAMA SHUTTER VERTICAL SECTIONS

PREPARED BY:
CERTWORKS, LLC
127 W. FAIRBANKS AVE., STE. 438
WINTER PARK, FL 32789
PH: (407) 644-6957 FX: (407) 644-2366

REVISIONS

NO.	DESCRIPTION	BY	DATE
A	REVISED PER MD COMMENTS	MS	01.20.10

7-7-11

ALEXIS SPYROU
FLORIDA P.E. NO. 68101
127 W. FAIRBANKS AVE. STE. 438
WINTER PARK, FL 32789
FBPE CERT. OF AUTHORIZATION NO. 28520

DATE: 7.11.11	DWN BY: JLR	CHK BY: KSD	SCALE: NTS

DWG #: GSA001

SHEET: 7 OF 12

7/12/2011 12:11 PM

p:\projects\gulfstream aluminum\md-p-09-0512.1 (bahamian shutters)\dwgs\gs\gsa001 bahama shutter (fan).dwg

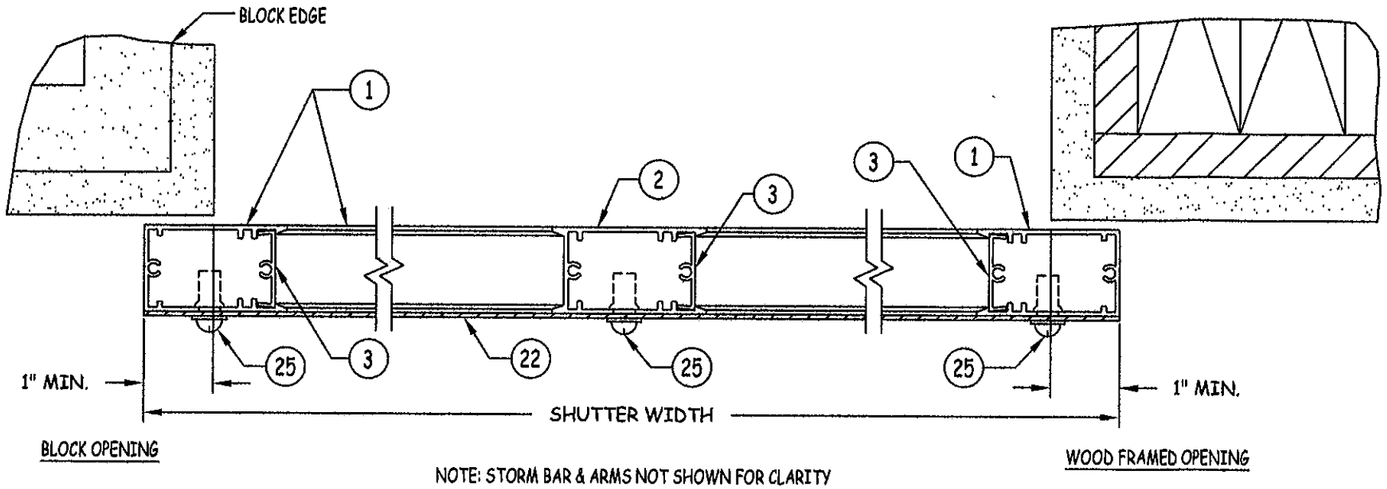

NOTE: STORM BAR & ARMS NOT SHOWN FOR CLARITY
3 & 4 PANEL SHUTTERS SIMILAR

N/8 HORIZONTAL SECTION

FLUSH MOUNT

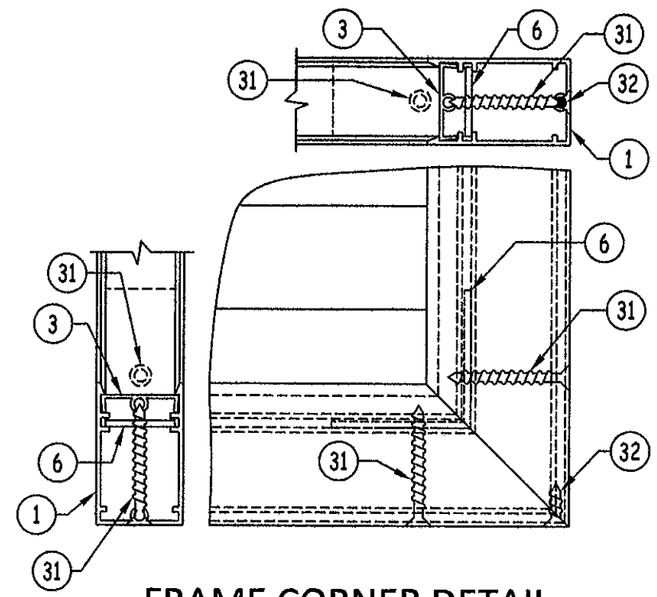

FRAME CORNER DETAIL

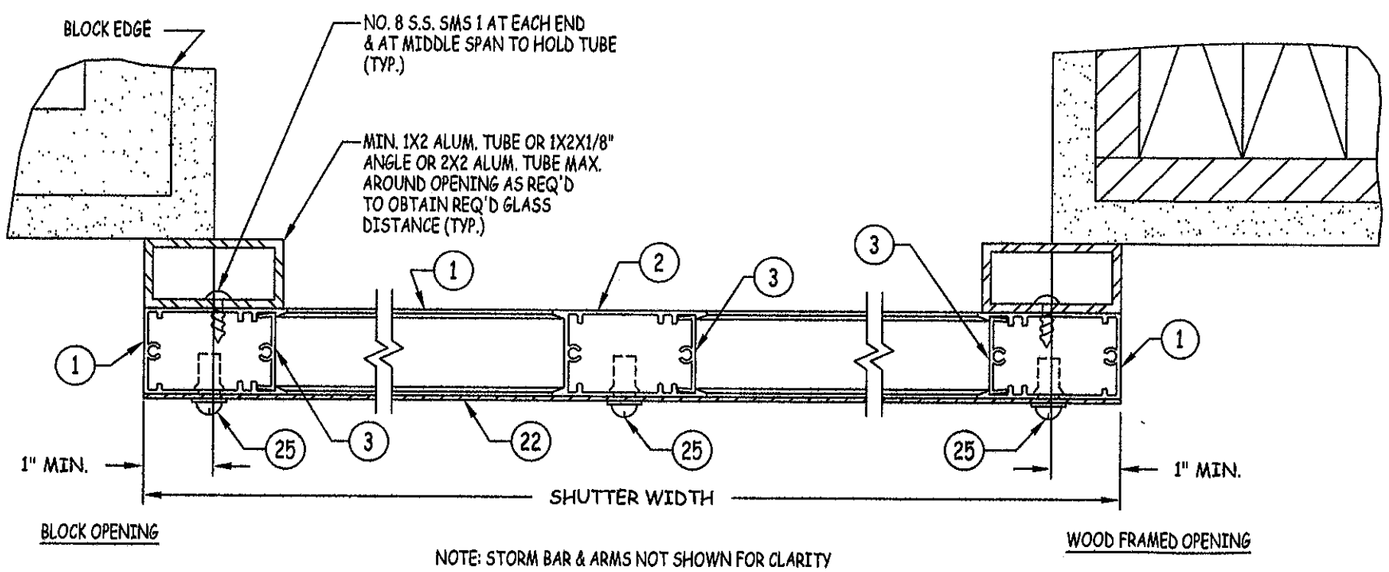

NOTE: STORM BAR & ARMS NOT SHOWN FOR CLARITY
3 & 4 PANEL SHUTTERS SIMILAR

M/8 HORIZONTAL SECTION

BUILD-OUT

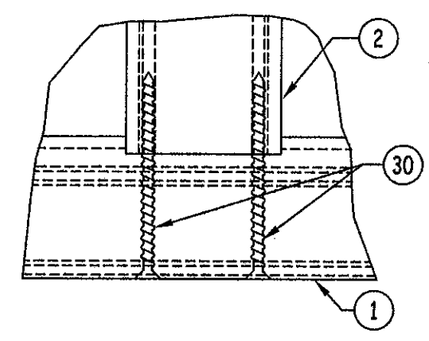

MULLION END CONNECTION DETAIL

PRODUCT RENEWED
as complying with the Florida
Building Code
Acceptance No 11-0621.02
Expiration Date 05/06/2015
By
Miami Dade Product Control

Gulfstream

GULFSTREAM ALUMINUM &
SHUTTER CORPORATION
3001 S.E. GRAN PARK WAY
STUART, FLORIDA 34997
PH: (800) 244-4143 FX: (772) 287-9740

TITLE:
BAHAMA SHUTTER
HORIZONTAL SECTIONS &
DETAILS

PREPARED BY:
CERTWORKS, LLC
127 W. FAIRBANKS AVE., STE. 438
WINTER PARK, FL 32789
PH: (407) 644-6957 FX: (407) 644-2366

REVISIONS

NO.	DESCRIPTION	BY	DATE

7/19/11

ALEXIS D. KYROU
FLORIDA P.E. LIC. 68101
127 W. FAIRBANKS AVE., STE. 438
WINTER PARK, FL 32789
FBPE CERT. OF AUTHORIZATION NO. 26520

DATE: 7.11.11	DWN BY: JLR	CHK BY: KSD	SCALE: NTS

DWG #: GSA001

SHEET: 8 OF 12

7/12/2011 12:12 PM

p:\projects\gulfstream aluminum\and-p-09-0512.1 (bahamian shutter)\dwgs\us\gsa001 bahama shutter (lan).dwg

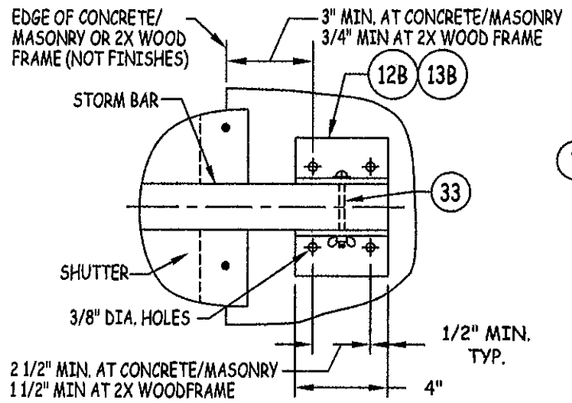

STORM BAR END CONNECTION DETAIL "A"

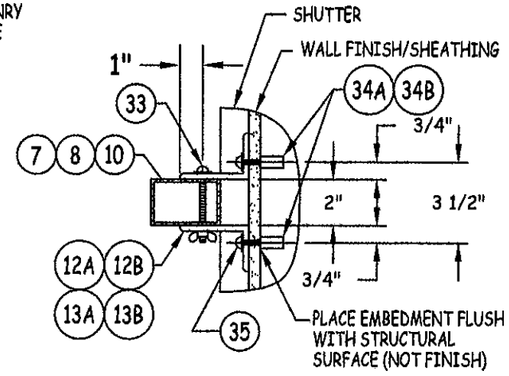

STORM BAR END CONNECTION DETAIL "B"

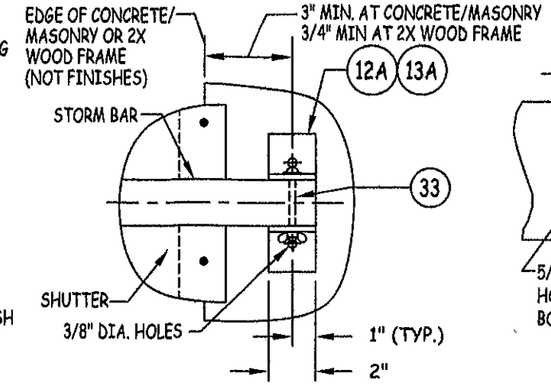

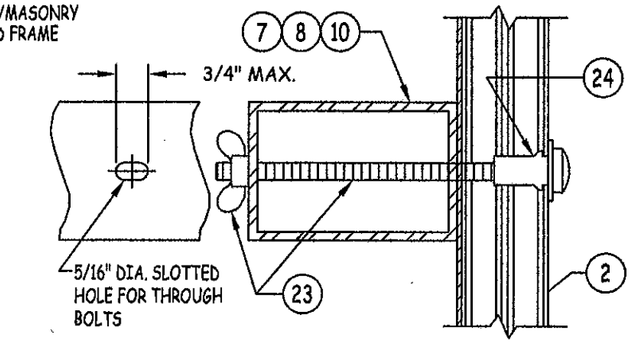

STORM BAR TO MULLION CONNECTION DETAIL

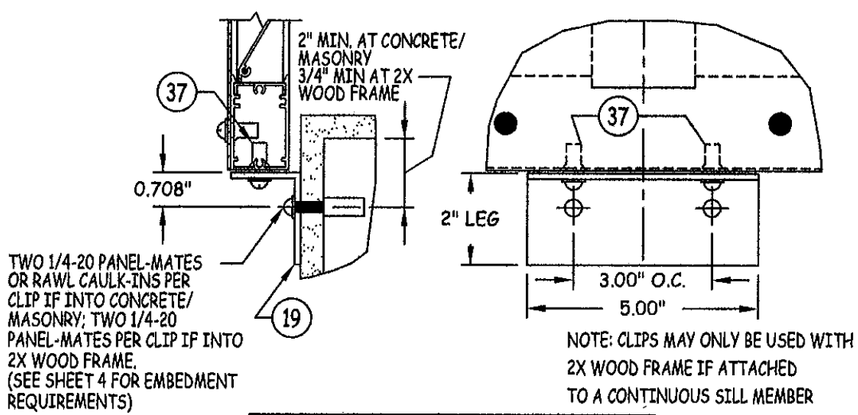

PLACE 1 CLIP AT EACH CORNER & MULLION LOCATION

OPTIONAL BASE CLIP DETAIL 1

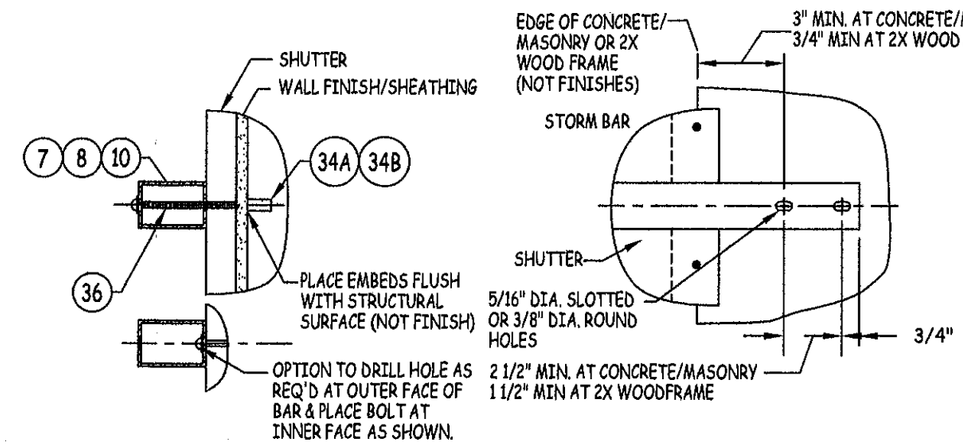

STORM BAR END CONNECTION "C"

Gulfstream
GULFSTREAM ALUMINUM & SHUTTER CORPORATION
3001 S.E. GRAN PARK WAY
STUART, FLORIDA 34997
PH: (800) 244-4143 FX: (772) 287-9740

TITLE: BAHAMA SHUTTER DETAILS

PREPARED BY:
CERTWORKS, LLC
127 W. FAIRBANKS AVE., STE. 438
WINTER PARK, FL 32789
PH: (407) 644-6957 FX: (407) 644-2366

REVISIONS

NO.	DESCRIPTION	BY	DATE

ALEXIS SCHOU
FLORIDA P.E. NO. 68101
127 W. FAIRBANKS AVE, STE. 438
WINTER PARK, FL 32789
FBPE CERT. OF AUTHORIZATION NO. 28520

PRODUCT RENEWED
as complying with the Florida Building Code
Acceptance No 11-0621.02
Expiration Date 05/06/2015
By
Miami Dade Product Control

DATE:	DWN BY:	CHK BY:	SCALE:
7.11.11	JLR	KSD	NTS

DWG #: GSA001

SHEET: 9 OF 12

7/12/2011 12:12 PM

p:\projects\gulfstream aluminum\tnd-p-09-0512.1 (bahamian shutter)\dwgs\ss\gsa001 bahama shutter (flat).dwg

1 SHUTTER FRAME
6063-T6 ALUMINUM
TYPICAL WALL
THICKNESS: .062"

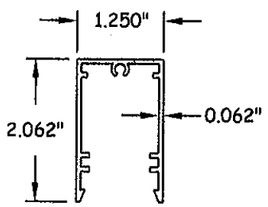

2 MULLION
6063-T6 ALUMINUM
TYPICAL WALL
THICKNESS: .070"

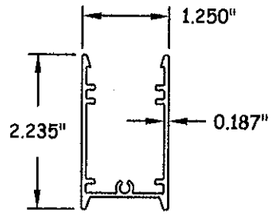

3 FRAME CAP
6063-T6 ALUMINUM
TYPICAL WALL
THICKNESS: .052"

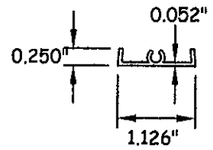

4 Z-BLADE
6063-T6 ALUMINUM
TYPICAL WALL
THICKNESS: .050"

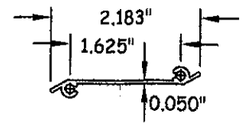

5 HOLLOW BLADE
6063-T6 ALUMINUM
TYPICAL WALL
THICKNESS: .040"

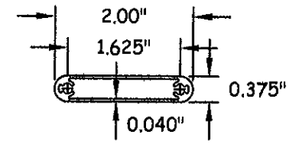

6 FRAME CORNER KEY
6063-T5 ALUMINUM
TYPICAL WALL
THICKNESS: .093"

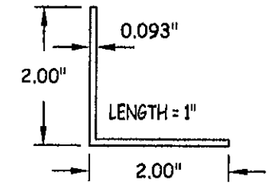

7 STORM BAR "A"
6061-T6 or 6005-T5 ALUMINUM
TYPICAL WALL
THICKNESS: .125"

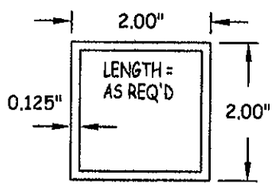

8 STORM BAR "B"
6061-T6 or 6005-T5 ALUMINUM
TYPICAL WALL
THICKNESS: .125"

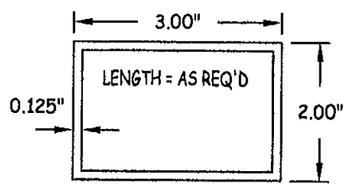

10 STORM BAR "D"
6061-T6 or 6005-T5 ALUMINUM
TYPICAL WALL
THICKNESS: .125"

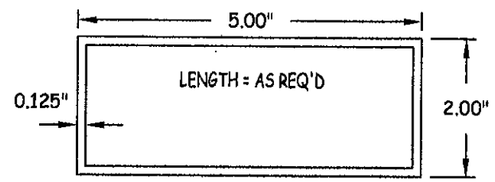

11 BASE ANGLE
6063-T5 ALUMINUM
TYPICAL WALL
THICKNESS: .125"

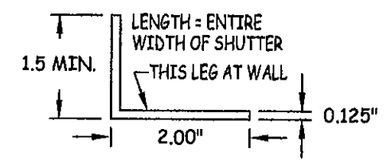

12A 12B STORM BAR END CON.
6063-T5 ALUMINUM
TYPICAL WALL
THICKNESS: .250"

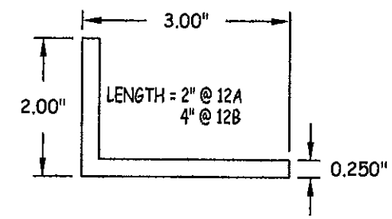

BILL OF MATERIALS

NO.	DESCRIPTION	NOTES	NO.	DESCRIPTION	NOTES
1	SHUTTER FRAME	6063-T6 ALUMINUM	19	L2XMINIMUM1.5X1/8 BASE ANGLE 5" LONG	6063-T5 ALUMINUM; 1 AT EA. VERTICAL SHUTTER MEMBER
2	MULLION	6063-T6 ALUMINUM	20	OUTER PORTION OF SHUTTER ARM	6063-T6 ALUMINUM
3	FRAME CAP	6063-T6 ALUMINUM	21	INNER PORTION OF SHUTTER ARM	6063-T6 ALUMINUM
4	Z-BLADE	6063-T6 ALUMINUM	22	0.050" THICK ALUMINUM HURRICANE SHEET	3003-H14 ALUM.; MIN. SEAM OVERLAPS = 2" @ MULLIONS
5	HOLLOW BLADE	6063-T6 ALUMINUM	23	1/4" STL BOLT OR THREADED ROD W/WING NUT	STORM BAR TO SHUTTER MULLIONS
6	L2X2X0.093 FRAME CORNER KEY	6063-T5 ALUMINUM; PLACED AT EA. FRAME CORNER	24	1/4" MOLLY JACK NUT OR 6063-T6 RIVNUT	FOR SETTING OF NO. 23 ABOVE INTO MULLIONS
7	TS2X2X1/8 STORM BAR	6061-T6 OR 6005-T5 ALUMINUM	25	1/4-20 S/STL BOLTS & 6063-T6 RIVNUTS	AT FRAME CORNERS & 12" MAX. O.C. (SHEET TO SHUTTER)
8	TS3X2X1/8 STORM BAR	6061-T6 OR 6005-T5 ALUMINUM	26	3/16" 5052 ALUMINUM POP RIVETS	1" FROM HINGE ENDS & 6" MAX. O.C. (TOP HINGE TO SHUTTER)
9	OPEN		27	3/16" 5052 ALUMINUM POP RIVETS	1" FROM ANGLE ENDS & 6" MAX. O.C. (BASE ANGLE TO SHUTTER)
10	TS5X2X1/8 STORM BAR	6061-T6 OR 6005-T5 ALUMINUM	28	1/4-20 S/STL BOLTS & 6063-T6 RIVNUTS	1" FROM ENDS & 12" MAX. O.C. (BASE ANGLE TO SHUTTER)
11	L2XMINIMUM1.5X1/8 CONT. BASE ANGLE	6063-T5 ALUMINUM; SECURES SHUTTERS CLOSED	29A	NO. 6 X 5/8" S/STL P.H. SMS	SECURES Z-BLADE END TO FRAME CAP (2 PER BLADE END)
12A	L3X2X1/4 STORM BAR END CONNECTOR	6063-T5 ALUMINUM; 2" LONG; USED WITH-OUT BUILD-OUT	29B	NO. 8 X 5/8" S/STL P.H. SMS	SECURES HOLLOW BLADE END TO FRAME CAP (2 PER BLADE END)
12B	L3X2X1/4 STORM BAR END CONNECTOR	6063-T5 ALUMINUM; 4" LONG; USED WITH-OUT BUILD-OUT	30	NO. 8 X 3" S/STL F.H. SMS	2 PER MULLION END THROUGH FRAME
13A	L4X2X1/4 STORM BAR END CONNECTOR	6063-T5 ALUMINUM; 2" LONG; USED WITH BUILD-OUT	31	NO. 6 X 1 3/4" S/STL F.H. SMS	2 PER FRAME CORNER INTO CORNER KEY
13B	L4X2X1/4 STORM BAR END CONNECTOR	6063-T5 ALUMINUM; 4" LONG; USED WITH BUILD-OUT	32	NO. 6 X 5/8" S/STL F.H. SMS	1 PER FRAME CORNER INTO FRAME SCREW BOSS
14	FEMALE TOP HINGE	6061-T6 ALUMINUM; FULL WIDTH OF SHUTTER	33	1/4" X MIN. 3" STL. BOLT W/WING NUT	1 PER STORM BAR END THROUGH END ANGLES & BAR
15	MALE TOP HINGE	6061-T6 ALUMINUM; FULL WIDTH OF SHUTTER	34A	1/4-20 RAWL CAULK-IN	EMBED FULL ANCHOR BODY INTO BLOCK/CONCR.
16	SHUTTER ARM SUPPORT BRACKET	6063-T6 ALUMINUM; ARM TO SHUTTER BRACKET	34B	1/4-20 MALE OR FEMALE PANEL MATE	EMBED 1 1/2" INTO WOOD & MIN. 1 1/4" INTO BLOCK
17	SHUTTER ARM SUPPORT BRACKET	6063-T6 ALUMINUM; ARM TO WALL BRACKET	35	1/4" STL BOLT OR THREADED ROD W/ WINGNUT	ANCHORS STORM BAR ENDS TO WALL ANCHORS
18	OPEN		36	1/4-20 STEEL BOLT	ANCHORS STORM BAR END CLIPS TO WALL ANCHORS
			37	1/4-20 S/STL BOLTS & 6063-T6 RIVNUTS	2 PER BASE CLIP INTO SHUTTER FRAME

PRODUCT RENEWED
as complying with the Florida Building Code
Acceptance No 11-0621.02
Expiration Date 05/06/2015
By
Miami Dade Product Control

Gulfstream Aluminum & Shutter Corporation
GULFSTREAM ALUMINUM & SHUTTER CORPORATION
3001 S.E. GRAN PARK WAY
STUART, FLORIDA 34997
PH: (800) 244-4143 FX: (772) 287-9740

TITLE: BAHAMA SHUTTER BILL OF MATERIALS & COMPONENTS

PREPARED BY:
CERTWORKS, LLC
127 W. FAIRBANKS AVE., STE. 438
WINTER PARK, FL 32789
PH: (407) 644-6957 FX: (407) 644-2366

REVISIONS

NO.	DESCRIPTION	BY	DATE
A	REVISED PER MD COMMENTS	MS	01.20.10

ALEXIS T. KOU
FLORIDA P.E. NO. 68101
127 W. FAIRBANKS AVE. STE 438
WINTER PARK, FL 32789
FBPE CERT. OF AUTHORIZATION NO. 26530

DATE: 7.11.11
DWN BY: JLR
CHK BY: KSD
SCALE: NTS

DWG #: GSA001

SHEET: 10 OF 12

7/12/2011 12:13 PM

p:\projects\gulfstream aluminum \nxd-p-09-09121 (bahamian shutter)\dwgs\gsa001 bahama shutter (lisa).dwg

13A 13B STORM BAR END CON.
6063-T5 ALUMINUM
TYPICAL WALL
THICKNESS: .250"

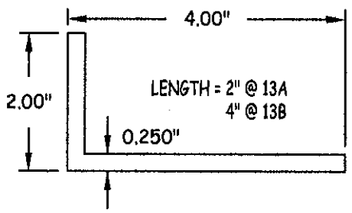

14 FEMALE TOP HINGE
6061-T6 ALUMINUM
TYPICAL WALL
THICKNESS: .068"

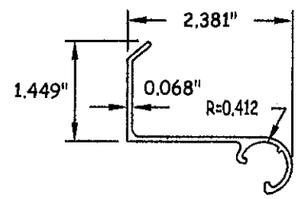

15 MALE TOP HINGE
6061-T6 ALUMINUM
TYPICAL WALL
THICKNESS: .062"

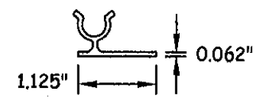

16 ARM SUPPORT BRACKET
6063-T6 ALUMINUM
TYPICAL WALL
THICKNESS: .080"

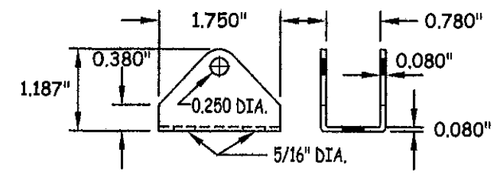

17 ARM SUPPORT BRACKET
6063-T6 ALUMINUM
TYPICAL WALL
THICKNESS: .080"

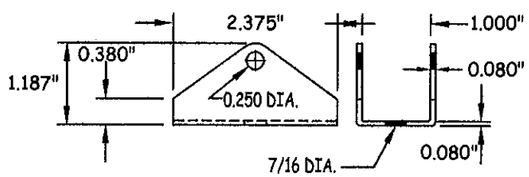

19 OPTIONAL BASE ANGLE
6063-T5 ALUMINUM
TYPICAL WALL
THICKNESS: .125"

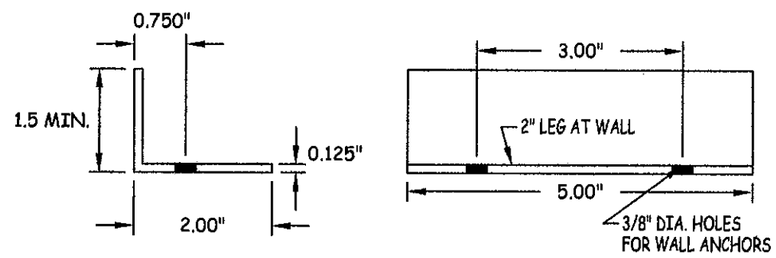

20 OUTSIDE ARM
6063-T6 ALUMINUM
TYPICAL WALL
THICKNESS: .049"

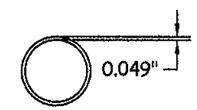

1" O.D. SERRATED TUBE

21 INSIDE ARM
6063-T6 ALUMINUM
TYPICAL WALL
THICKNESS: .049"

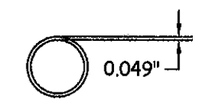

7/8" O.D. SERRATED TUBE

Gulfstream

GULFSTREAM ALUMINUM &
SHUTTER CORPORATION
3001 S.E. GRAN PARK WAY
STUART, FLORIDA 34997
PH: (800) 244-4143 FX: (772) 287-9740

TITLE:
BAHAMA SHUTTER
COMPONENTS

PREPARED BY:
CERTWORKS, LLC
127 W. FAIRBANKS AVE., STE. 438
WINTER PARK, FL 32789
PH: (407) 644-6957 FX: (407) 644-2366

REVISIONS

NO.	DESCRIPTION	BY	DATE
A	REVISED PER MD COMMENTS	MS	01.20.10

ALEXIS SEYROU
FLORIDA P.E. NO. 68101
127 W. FAIRBANKS AVE., STE. 438
WINTER PARK, FL 32789
FBPE CERT. OF AUTHORIZATION NO. 28520

77971

PRODUCT RENEWED
as complying with the Florida
Building Code
Acceptance No 11-0621.02
Expiration Date 05/06/2015
By
Miami Dade Product Control

DATE: 7.11.11
DWN BY: JLR
CHK BY: KSD
SCALE: NTS

DWG #: GSA001

SHEET: 11 OF 12

7/12/2011 12:13 PM

p:\projects\gulfstream aluminum\md-p-09-0512.1 (bahamian shutter)\dwgs\as\gsa001 bahama shutter (tm).dwg

PRESSURE LOAD TABLE FOR STORM BARS & BAR END CONNECTIONS							
Shutter Width (in)	Bar Spacing (in)	ALLOWABLE PRESSURES (PSF) AS CONTROLLED BY BARS			ALLOWABLE PRESSURES (PSF) AS CONTROLLED BY CONNECTIONS		
					Connection "A"	Connection "B" & "C"	
		TS2x2x1/8	TS3x2x1/8	TS5x2x1/8	Wood/Concrete/ Masonry	Wood	Concrete/ Masonry
36	42	80	80	80	80	80	60
	48	80	80	80	80	80	53
42	36	80	80	80	80	80	60
	42	74	80	80	80	80	52
	48	65	80	80	80	71	45
48	30	80	80	80	80	80	63
	36	70	80	80	80	80	53
	42	60	80	80	80	71	45
	48	52	80	80	80	62	40
54	30	69	80	80	80	80	56
	36	57	80	80	80	74	47
	42	49	80	80	80	63	40
	48	43	80	80	73	55	35
60	24	72	80	80	80	80	63
	30	58	80	80	80	80	51
	36	48	80	80	80	67	42
	42	41	80	80	75	57	36
	48	36	80	80	66	50	32
66	24	54	80	80	80	80	58
	30	43	80	80	80	73	46
	36	36	73	80	79	61	38
	42	31	63	80	68	52	33
	48	27	55	80	60	45	29
72	24	40	94	80	80	80	53
	30	32	76	80	80	67	42
	36	27	63	80	73	55	35
	42	-	54	80	62	48	30
	48	-	47	80	55	42	26
78	24	30	81	80	80	77	49
	30	-	65	80	80	61	39
	36	-	54	80	67	51	32
	42	-	46	80	58	44	28
	48	-	41	80	50	38	24
84	24	-	62	80	80	71	45
	30	-	50	80	75	57	36
	36	-	42	80	62	48	30
	42	-	36	80	53	41	26
	48	-	31	80	47	36	23
90	24	-	49	80	80	67	42
	30	-	39	80	70	53	34
	36	-	32	80	58	44	28
	42	-	28	80	50	38	24
	48	-	-	80	44	33	21

1. ALL PRESSURES ARE FOR BOTH POSITIVE & NEGATIVE AND ARE PSF.
2. REF. SHEET 9 FOR CONNECTION TYPES.

PRESSURE LOAD TABLE FOR STORM BARS & BAR END CONNECTIONS							
Shutter Width (in)	Bar Spacing (in)	ALLOWABLE PRESSURES (PSF) AS CONTROLLED BY BARS			ALLOWABLE PRESSURES (PSF) AS CONTROLLED BY CONNECTIONS		
					Connection "A"	Connection "B" & "C"	
		TS2x2x1/8	TS3x2x1/8	TS5x2x1/8	Wood/Concrete/ Masonry	Wood	Concrete/ Masonry
96	24	-	39	80	80	62	40
	30	-	31	80	66	50	32
	36	-	26	80	55	42	26
	42	-	-	70	47	36	23
	48	-	-	62	41	31	20
102	24	-	31	110	77	59	37
	30	-	25	88	62	47	30
	36	-	-	74	51	39	25
	42	-	-	63	44	34	21
	48	-	-	55	39	29	-
108	24	-	-	91	73	55	35
	30	-	-	73	58	44	28
	36	-	-	61	49	37	23
	42	-	-	52	42	32	20
	48	-	-	46	36	28	-
112	24	-	-	80	70	53	34
	30	-	-	64	56	43	27
	36	-	-	53	47	36	23
	42	-	-	46	40	31	19
	48	-	-	40	35	27	-

LOAD TABLE INSTRUCTIONS:

1. SELECT AN OVERALL SHUTTER SIZE (TOTAL WIDTH & HEIGHT).
2. DETERMINE THE REQUIRED DESIGN WIND PRESSURE FOR THE SHUTTER (OBTAIN FROM A FLORIDA REGISTERED ENGINEER).
3. IF THE SHUTTER HEIGHT IS LESS THAN OR EQUAL TO 76", GO TO "PRESSURE TABLE FOR SINGLE SPAN SHUTTERS" ON SHEET 9 AND COMPARE THE REQUIRED DESIGN PRESSURE TO THE ALLOWABLE PRESSURES IN THE TABLE. IF ALLOWABLE PRESSURE IS EQUAL TO OR GREATER THAN THAT REQUIRED, NO BAR IS REQUIRED & YOU ARE FINISHED. IF ALLOWABLE PRESSURE IS LESS THAN REQUIRED, STORM BAR(S) ARE NEEDED, SO CONTINUE TO NUMBER 4 BELOW.
4. IF BARS ARE REQUIRED, GO TO LOAD TABLES ON THIS SHEET.
5. GO TO APPLICABLE SHUTTER WIDTH IN TABLE AND CHOOSE THE DESIRED BAR SPACING.
6. GO ACROSS THE TABLE AND CHOOSE THE BAR AND CONNECTION WHO'S ALLOWABLE PRESSURE IS GREATER THAN OR EQUAL TO THE REQUIRED PRESSURE. IF THE DESIRED BAR AND/OR CONNECTION TYPE DOES NOT MEET THE REQUIRED SHUTTER DESIGN PRESSURE, CHOOSE ANOTHER BAR SPACING AND CHECK THE BAR TYPE & CONNECTION AGAIN. REPEAT UNTIL DESIRED & CORRECT BAR & CONNECTION TYPE ARE DETERMINED (NOTE THAT THE LESSER PRESSURE OF THE BAR, CONNECTION TYPE, OR MAXIMUM ALLOWABLE OF +/-80 PSF SHALL CONTROL THE SHUTTER).

PRODUCT RENEWED
as complying with the Florida Building Code
Acceptance No 11-0621.02
Expiration Date 05/06/2016
By
Miami Dade Product Control

GULFSTREAM ALUMINUM & SHUTTER CORPORATION
3001 S.E. GRAN PARK WAY
STUART, FLORIDA 34997
PH: (800) 244-4143 FX: (772) 287-9740

TITLE: BAHAMA SHUTTER PRESSURE LOAD TABLES

PREPARED BY:
CERTWORKS, LLC
127 W. FAIRBANKS AVE., STE. 438
WINTER PARK, FL 32789
PH: (407) 644-6957 FX: (407) 644-2366

REVISIONS

NO.	DESCRIPTION	BY	DATE

ALEXIS SZYCKU
FLORIDA P.E. No. 68101
127 W. FAIRBANKS AVE., STE. 438
WINTER PARK, FL 32789
REPS CERT. OF AUTHORIZATION NO. 28520

DATE: 7.11.11
DWN BY: JLR
CHK BY: KSD
SCALE: NTS

DWG #: GSA001

SHEET: 12 OF 12

7/12/2011 12:13 PM

p:\projects\gulfstream aluminum\ind-p-09-05121 (bahamian shutter)\dwgs\cs\gsa001 bahama shutter (lim).dwg