MIAMI-DADE COUNTY
BUILDING AND NEIGHBORHOOD COMPLIANCE DEPARTMENT (BNC)
BOARD AND CODE ADMINISTRATION DIVISION

MIAMI-DADE COUNTY, FLORIDA
PRODUCT CONTROL SECTION
11805 SW 26th Street, Room 208
Miami, Florida 33175-2474
T (786) 315-2590 F (786) 315-2599
www.miamidade.gov/building

NOTICE OF ACCEPTANCE (NOA)

PGT Industries, Inc.
1070 Technology Drive
Nokomis, FL 34275

SCOPE:

This NOA is being issued under the applicable rules and regulations governing the use of construction materials. The documentation submitted has been reviewed and accepted by Miami-Dade County BNC-Product Control Section to be used in Miami-Dade County and other areas where allowed by the Authority Having Jurisdiction (AHJ).

This NOA shall not be valid after the expiration date stated below. The Miami-Dade County Product Control Section (In Miami-Dade County) and/ or the AHJ (in areas other than Miami-Dade County) reserve the right to have this product or material tested for quality assurance purposes. If this product or material fails to perform in the accepted manner, the manufacturer will incur the expense of such testing and the AHJ may immediately revoke, modify, or suspend the use of such product or material within their jurisdiction. BNC reserves the right to revoke this acceptance, if it is determined by Miami-Dade County Product Control Section that this product or material fails to meet the requirements of the applicable building code.

This product is approved as described herein, and has been designed to comply with the Florida Building Code, including the High Velocity Hurricane Zone.

DESCRIPTION: Series "HR-710" Aluminum Horizontal Sliding Window – L.M.I.

APPROVAL DOCUMENT: Drawing No. **4127-10,** titled "Alum. Horizontal Roller Window, Impact", sheets 1 through 11 of 11, dated 02/28/2006 with the latest revision "**D**" dated 06/20/2011, prepared by PGT Industries, Inc., dated 06/29/2011, signed and sealed by Robert L. Clark, P. E., bearing the Miami-Dade County Product Control Revision stamp with the Notice of Acceptance number and Expiration date by the Miami-Dade County Product Control Section.

MISSILE IMPACT RATING: Large and Small Missile Impact Resistant.

LABELING: Each unit shall bear a permanent label with the manufacturer's name or logo, city, state, model/ series and following statement: "Miami-Dade County Product Control Approved" unless otherwise noted herein.

RENEWAL of this NOA shall be considered after a renewal application has been filed and there has been no change in the applicable building code negatively affecting the performance of this product.

TERMINATION of this NOA will occur after the expiration date or if there has been a revision or change in the materials, use, and/or manufacture of the product or process. Misuse of this NOA as an endorsement of any product, for sales, advertising or any other purposes shall automatically terminate this NOA. Failure to comply with any section of this NOA shall be cause for termination and removal of NOA.

ADVERTISEMENT: The NOA number preceded by the words Miami-Dade County, Florida, and followed by the expiration date may be displayed in advertising literature. If any portion of the NOA is displayed, then it shall be done in its entirety.

INSPECTION: A copy of this entire NOA shall be provided to the user by the manufacturer or its distributors and shall be available for inspection at the job site at the request of the Building Official.

This NOA **renews and revises NOA No. 07-0815.09** and consists of this page 1, evidence pages E-1 and E-2, as well as approval document mentioned above.

The submitted documentation was reviewed by **Helmy A. Makar, P. E., M. S.**

Helmy A. Makar
08/18/2011

MIAMI-DADE COUNTY APPROVED

NOA No. 11-0630.02
Expiration Date: December 21, 2016
Approval Date: August 18, 2011
Page 1

A. DRAWINGS

1. Manufacturer's die drawings and sections.
2. Drawing No. **4127–10,** titled "Alum. Horizontal Roller Window, Impact", sheets I through 11 of 11, dated 02/28/2006 with the latest revision "**D**" dated 06/20/2011, prepared by PGT Industries, Inc., dated 06/29/2011, signed and sealed by Robert L. Clark, P. E.

B. TESTS

1. Test reports on:1) Large Missile Impact Test per FBC, TAS 201–94
   2) Cyclic Wind Pressure Loading per FBC, TAS 203–94

   Along with marked–up drawings and installation diagram of XOX aluminum horizontal sliding window, prepared by Fenestration Testing Laboratory, Inc., Test Report No. **FTL–5330**, dated 07/18/2007, signed and sealed by Carlos S. Rionda P. E.

   (Submitted under NOA No. 07–0815.09)
2. Test reports on:1) Air Infiltration Test, per FBC, TAS 202–94
   2) Uniform Static Air Pressure Test, Loading per FBC TAS 202–94
   3) Water Resistance Test, per FBC, TAS 202–94
   4) Large Missile Impact Test per FBC, TAS 201–94
   5) Cyclic Wind Pressure Loading per FBC, TAS 203–94
   6) Forced Entry Test, Type "C" sliding window, Grade 10, per FBC 2411 3.2.1, TAS 202–94 and per ASTM F 842–04

   Along with marked–up drawings and installation diagram of XOX aluminum horizontal sliding window, prepared by Fenestration Testing Laboratory, Inc., Test Report No. **FTL–4858**, dated 03/08/2006, signed and sealed by Edmundo Largaespada, P. E.

   (Submitted under NOA No. 06–0405.06)
3. Test reports on:1) Air Infiltration Test, per FBC, TAS 202–94
   2) Uniform Static Air Pressure Test, Loading per FBC TAS 202–94
   3) Water Resistance Test, per FBC, TAS 202–94
   4) Large Missile Impact Test per FBC, TAS 201–94
   5) Cyclic Wind Pressure Loading per FBC, TAS 203–94
   6) Forced Entry Test, Type "C" sliding window, Grade 10, per FBC 2411 3.2.1, TAS 202–94 and per ASTM F 842–04

   Along with marked–up drawings and installation diagram of XOX aluminum horizontal sliding window, prepared by Fenestration Testing Laboratory, Inc., Test Report No. **FTL–4859**, dated 03/08/2006, signed and sealed by Edmundo Largaespada, P. E.

   (Submitted under NOA No. 06–0405.06)

Helmy A. Makar, P. E., M. S.
BNC–Product Control Unit Supervisor
NOA No. 11–0630.02
Expiration Date: December 21, 2016
Approval Date: August 18, 2011

C. CALCULATIONS

1. Anchor verification calculations and structural analysis, complying with FBC, prepared by PGT Industries, Inc., dated 10/26/06, signed and sealed by Robert L. Clark, P. E.
   Complies with ASTM E1300–98/ 02
   (Submitted under previous NOA No. 07–0815.09)

D. QUALITY ASSURANCE

1. Miami–Dade Building and Neighborhood Compliance Department (BNC).

E. MATERIAL CERTIFICATIONS

1. Notice of Acceptance No. **10–0922.09** issued to E.I. DuPont DeNemours & Co., Inc. for their "**DuPont Butacite® PVB, Interlayer**" dated 12/24/10, expiring on 12/11/11.
2. Notice of Acceptance No. **08–0206.01** issued to Solutia Inc. for their **"Saflex HP Glass Interlayer"** dated 04/17/2008, expiring on 04/17/2013.

F. STATEMENTS

1. Statement letter of no financial interest, conformance and compliance with the FBC–2007, dated 06/29/2011, signed and sealed by Robert L. Clark, P. E.
2. Laboratory compliance letter for Test Report No. **FTL–5330**, issued by Fenestration Testing Laboratory, Inc., dated 07/18/2007, signed and sealed by Carlos S. Rionda, P.E.
   (Submitted under previous NOA No. 07–0815.09)
3. Laboratory compliance letter for Test Reports No.'s **FTL–4858 and FTL–4859**, issued by Fenestration Testing Laboratory, Inc., dated 03/08/2006, signed and sealed by Edmundo Largaespada, P. E.
   (Submitted under NOA No. 06–0405.06)

G. OTHERS

1. Notice of Acceptance No. **07–0815.09**, issued to PGT Industries, Inc. for their Series "HR–710 Aluminum Horizontal Roller Window – L.M.I.", approved on 01/03/2008 and expiring on 12/21/2011.

Helmy A. Makar, P. E., M. S.
BNC–Product Control Unit Supervisor
NOA No. 11–0630.02
Expiration Date: December 21, 2016
Approval Date: August 18, 2011

GENERAL NOTES: IMPACT HORIZONTAL ROLLER FLANGED AND INTEGRAL FIN WINDOW

1. GLAZING OPTIONS: (SEE DETAILS ON SHEET 2). FOR INSTALLATION ABOVE 30 FT, GLASS TYPES G THRU L MUST HAVE A TEMPERED GLASS CAP.

   A. 5/16" LAMI CONSISTING OF (2) LITES OF 1/8" ANNEALED GLASS WITH A .090 DUPONT BUTACITE OR SAFLEX/KEEPSAFE MAXIMUM PVB INTERLAYER.

   B. 516" LAMI CONSISTING OF (1) LITE OF 1/8" ANNEALED GLASS AND (1) LITE OF 1/8" HEAT STRENGTHENED GLASS WITH A .090 DUPONT BUTACITE OR SAFLEX/KEEPSAFE MAXIMUM PVB INTERLAYER.

   C. 5/16" LAMI CONSISTING OF (2) LITES OF 1/8" HEAT STRENGTHENED GLASS WITH AN .090 DUPONT BUTACITE OR SAFLEX/KEEPSAFE MAXIMUM PVB INTERLAYER.

   D. 7/16" LAMI CONSISTING OF (2) LITES OF 3/16" ANNEALED GLASS WITH AN .090 DUPONT BUTACITE OR SAFLEX/KEEPSAFE MAXIMUM PVB INTERLAYER.

   E. 716" LAMI CONSISTING OF (1) LITE OF 3/16" ANNEALED GLASS AND (1) LITE OF 3/16" HEAT STRENGTHENED GLASS WITH AN .090 DUPONT BUTACITE OR SAFLEX/KEEPSAFE MAXIMUM PVB INTERLAYER.

   F. 7/16" LAMI CONSISTING OF (2) LITES OF 3/16" HEAT STRENGTHENED GLASS WITH AN .090 DUPONT BUTACITE OR SAFLEX/KEEPSAFE MAXIMUM PVB INTERLAYER.

   G. 13/16" LAMI IG: (1) LITE OF 1/8" OR 3/16" ANNEALED (MIN.) GLASS, 5/16" OR 3/8" AIR SPACE AND 5/16" LAMI CONSISTING OF (2) LITES OF 1/8" ANNEALED GLASS WITH A .090 DUPONT BUTACITE OR SAFLEX/KEEPSAFE MAXIMUM PVB INTERLAYER.

   H. 13/16" LAMI IG: (1) LITE OF 1/8" OR 3/16" ANNEALED (MIN.) GLASS, 5/16" OR 3/8" AIR SPACE AND 5/16" LAMI CONSISTING OF (1) LITE OF 1/8" ANNEALED GLASS AND (1) LITE OF 1/8" HEAT STRENGTHENED GLASS WITH A .090 DUPONT BUTACITE OR SAFLEX/KEEPSAFE MAXIMUM PVB INTERLAYER.

   I. 13/16" LAMI IG: (1) LITE OF 1/8" OR 3/16" ANNEALED (MIN.) GLASS, 5/16" OR 3/8" AIR SPACE AND 5/16" LAMI CONSISTING OF (2) LITES OF 1/8" HEAT STRENGTHENED GLASS WITH AN .090 DUPONT BUTACITE OR SAFLEX/KEEPSAFE MAXIMUM PVB INTERLAYER.

   J. 13/16" LAMI IG: (1) LITE OF 1/8" OR 3/16" ANNEALED (MIN.) GLASS, 3/16" OR 1/4" AIR SPACE AND 7/16" LAMI CONSISTING OF (2) LITES OF 3/16" ANNEALED GLASS WITH AN .090 DUPONT BUTACITE OR SAFLEX/KEEPSAFE MAXIMUM PVB INTERLAYER.

   K. 13/16" LAMI IG: (1) LITE OF 1/8" OR 3/16" ANNEALED (MIN.) GLASS, 3/16" OR 1/4" AIR SPACE AND 716" LAMI CONSISTING OF (1) LITE OF 3/16" ANNEALED GLASS AND (1) LITE OF 3/16" HEAT STRENGTHENED GLASS WITH AN .090 DUPONT BUTACITE OR SAFLEX/KEEPSAFE MAXIMUM PVB INTERLAYER.

   L. 13/16" LAMI IG: (1) LITE OF 1/8" OR 3/16" ANNEALED (MIN.) GLASS, 3/16" OR 1/4" AIR SPACE AND 7/16" LAMI CONSISTING OF (2) LITES OF 3/16" HEAT STRENGTHENED GLASS WITH AN .090 DUPONT BUTACITE OR SAFLEX/KEEPSAFE MAXIMUM PVB INTERLAYER.

2. CONFIGURATIONS: OX, XO, XOX

3. DESIGN PRESSURES: (SEE TABLES, SHEET 3)

   A. NEGATIVE DESIGN LOADS BASED ON TESTED PRESSURE AND GLASS TABLES ASTM E 1300-02.

   B. POSITIVE DESIGN LOADS BASED ON WATER TEST PRESSURE AND GLASS TABLES ASTM E 1300-02.

4. ANCHORAGE: THE 33 1/3% STRESS INCREASE HAS NOT BEEN USED IN THE DESIGN OF THIS PRODUCT. SEE SHEETS 8 THROUGH 11 FOR ANCHORAGE DETAILS.

5. SHUTTERS ARE NOT REQUIRED.

6. FRAME AND PANEL CORNERS SEALED WITH NARROW JOINT SEALANT OR GASKET.

7. REFERENCES: TEST REPORTS FTL-4858, FTL-4859 AND FTL-5330.
   ELCO TEXTRON NOA: 04-0721.01, 03-0225.05
   ANSI/AF&PA NDS-2005 FOR WOOD CONSTRUCTION
   ADM-2005 ALUMINUM DESIGN MANUAL

8. THIS PRODUCT HAS BEEN DESIGNED & TESTED TO COMPLY WITH THE REQUIREMENTS OF THE FLORIDA BUILDING CODE, CURRENT EDITION INCLUDING THE HIGH VELOCITY HURRICANE ZONE (HVHZ).

D

9. FOR INSTALLATION IN THE HVHZ ABOVE 30 FT, GLASS TYPES G - L SHALL HAVE A TEMPERED I.G. GLASS CAP. BOTH THE DP AND ANCHOR QUANTITY REMAIN UNCHANGED.

NOA DRAWING MAP

	SHEET
GENERAL NOTES	1
GLAZING DETAILS	2
DESIGN PRESSURES	3
ELEVATIONS	4
VERT. SECTIONS	5
HORIZ. SECTIONS	5
PARTS LIST	6
EXTRUSIONS	7
CORNER DETAIL	5
ANCHORAGE	8-11

PRODUCT REVISED
as complying with the Florida
Building Code
Acceptance No 11-0630.02
Expiration Date 12/21/2016
By
Miami Dade Product Control

6/29/11
Robert L. Clark, P.E.
PE #39712
Structural

Revsd By:	Date:	Revisions:	
J.R.	6/20/11	D	ADDED IG CAP TO BE TEMPERED @ +30FT NOTE.
F.K.	4/15/07	C	ADD FTL-5330 TO NOTES 7 & CHG. NOTE 8 TO CURRENT EDIT.
F.K.	10/17/06	B	CHANGE TO ASTM E 1300-02
Drawn By: F.K.	Date: 2/28/06	Checked By: J.J.	Date: 3/23/06

1070 TECHNOLOGY DRIVE
NOKOMIS, FL 34275

P.O. BOX 1529
NOKOMIS, FL 34274

PGT Visibly Better

Description: GENERAL NOTES

Title: ALUM. HORIZONTAL ROLLER WINDOW, IMPACT

Series/Model:	Scale:	Sheet:	Drawing No.	Rev:
HR710	NTS	1 of 11	4127-10	D

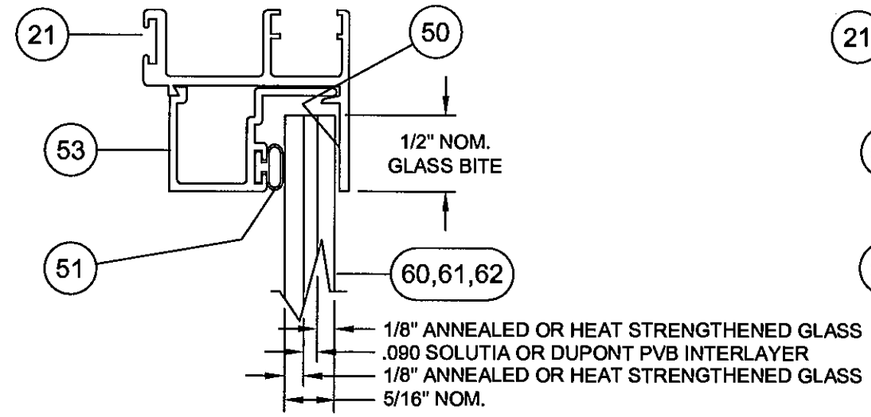

5/16" LAMINATED GLASS

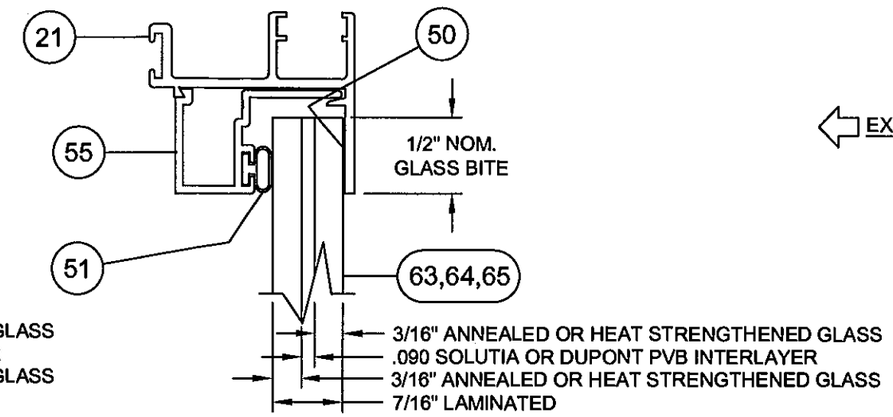

7/16" LAMINATED GLASS

EXTERIOR INTERIOR
(ALL SECTIONS)

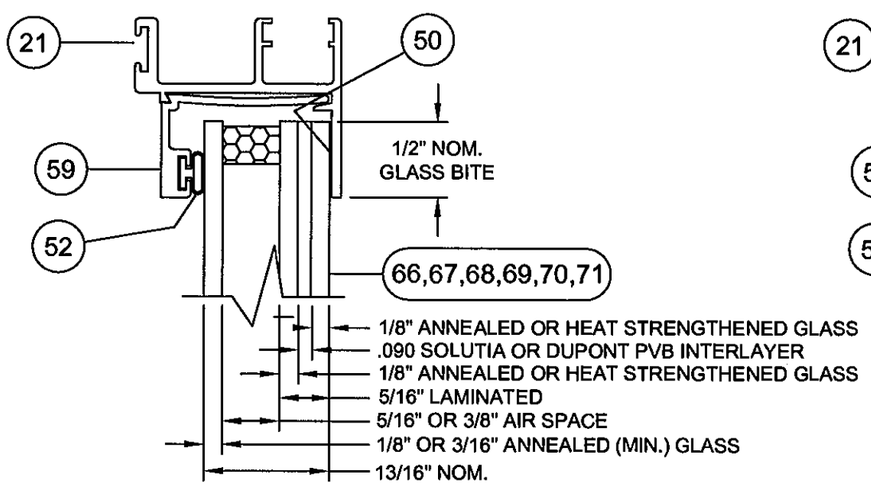

13/16" LAMI IG GLASS W/ 5/16" LAMI

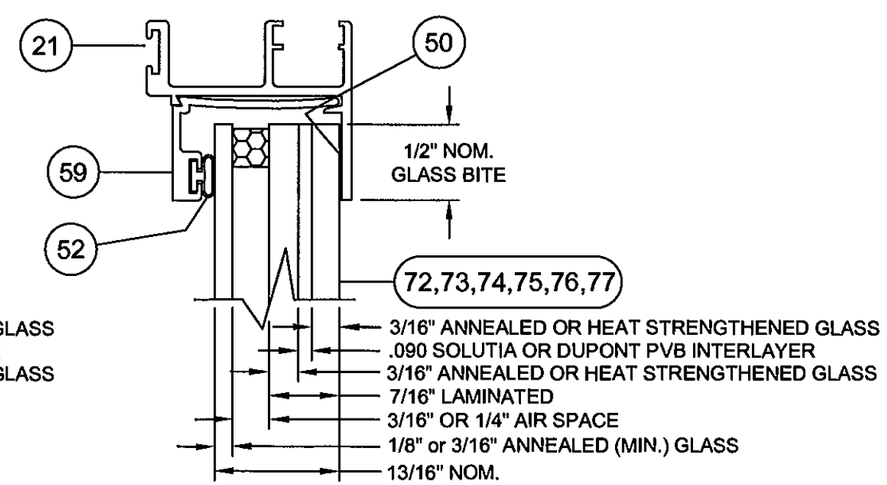

13/16" LAMI IG GLASS W/ 7/16" LAMI

(D) FOR INSTALLATION IN THE HVHZ ABOVE 30 FT, GLASS TYPES G - L SHALL HAVE A TEMPERED I.G. GLASS CAP. BOTH THE DP AND ANCHOR QUANTITY TO REMAIN UNCHANGED.

Revsd By:	Date:	Revisions:	
J.R.	6/20/11	D	ADDED IG CAP TO BE TEMPERED @ +30FT NOTE.
F.K.	4/15/07	C	NO CHANGE THIS SHEET
F.K.	10/17/06	B	NO CHANGE THIS SHEET
Drawn By: F.K.	Date: 2/28/06	Checked By: J.J.	Date: 3/23/06

1070 TECHNOLOGY DRIVE
NOKOMIS, FL 34275

P.O. BOX 1529
NOKOMIS, FL 34274

PGT
Visibly Better

Description: GLAZING DETAILS

Title: ALUM. HORIZONTAL ROLLER WINDOW, IMPACT

Series/Model:	Scale:	Sheet:	Drawing No.	Rev:
HR710	Full	2 of 11	4127-10	D

PRODUCT REVISED
as complying with the Florida
Building Code
Acceptance No 11-0630.02
Expiration Date 12/21/2016
By
Miami Dade Product Control

6/29/11
Robert L. Clark, P.E.
PE #39712
Structural

TABLE 1.

XOX (1/4,1/2,1/4) FLANGE OR INTEGRAL FIN WINDOWS (FLANGED SHOWN. FIN WINDOWS W/ SAME DLO ARE 1" SMALLER)

WINDOW WIDTH	GLASS TYPE	WINDOW HEIGHT															
		26"		36"		38 3/8"		48"		50 5/8"		54"		60"		63"	
84"	A,B,G,H	+60.0	-60.0	+60.0	-60.0	+60.0	-60.0	+60.0	-60.0	+60.0	-60.0	+60.0	-60.0	+60.0	-60.0	+60.0	-60.0
96"	A,B,G,H	+60.0	-60.0	+60.0	-60.0	+60.0	-60.0	+60.0	-60.0	+60.0	-60.0	+60.0	-60.0	+58.8	-58.8	+56.2	-56.2
106 3/8"	A,B,G,H	+60.0	-60.0	+60.0	-60.0	+60.0	-60.0	+60.0	-60.0	+60.0	-60.0	+60.0	-60.0	+55.2	-55.2	+52.3	-52.3
108"	A,B,G,H	+60.0	-60.0	+60.0	-60.0	+60.0	-60.0	+60.0	-60.0	+60.0	-60.0	+60.0	-60.0	+54.6	-54.6	+51.7	-51.7
111"	A,B,G,H	+60.0	-60.0	+60.0	-60.0	+60.0	-60.0	+60.0	-60.0	+60.0	-60.0	+59.5	-59.5	+53.6	-53.6	+50.9	-50.9
UP TO 111"	C,I															+60.0	-60.0
UP TO 111"	D,E,F, J,K,L															+75.0	-75.0

(D) FOR INSTALLATION IN THE HVHZ ABOVE 30 FT, GLASS TYPES G - L SHALL HAVE A TEMPERED I.G. GLASS CAP. BOTH THE DP AND ANCHOR QUANTITY REMAIN UNCHANGED.

TABLE 2.

XOX (1/3,1/3,1/3) FLANGE OR INTEGRAL FIN WINDOWS (FLANGED SHOWN. FIN WINDOWS W/ SAME DLO ARE 1" SMALLER)

WINDOW WIDTH	GLASS TYPE	WINDOW HEIGHT		
		ALL HEIGHTS UP TO	63"	
TO 86 7/16"	A,B,C, G,H,I		+60.0	-60.0
TO 86 7/16"	D,E,F, J,K,L		+75.0	-75.0

TABLE 3.

OX AND XO FLANGE OR INTEGRAL FIN WINDOWS (FLANGED SHOWN. FIN WINDOWS W/ SAME DLO ARE 1" SMALLER)

WINDOW WIDTH	GLASS TYPE	WINDOW HEIGHT															
		26"		36"		38 3/8"		48"		50 5/8"		54"		60"		63"	
60"	A,B,G,H	+75.0	-75.0	+75.0	-75.0	+75.0	-75.0	+75.0	-75.0	+75.0	-75.0	+75.0	-75.0	+75.0	-75.0	+75.0	-75.0
66"	A,B,G,H	+75.0	-75.0	+75.0	-75.0	+75.0	-75.0	+75.0	-75.0	+75.0	-75.0	+75.0	-75.0	+74.2	-74.2	+70.2	-70.2
72"	A,B,G,H	+75.0	-75.0	+75.0	-75.0	+75.0	-75.0	+75.0	-75.0	+75.0	-75.0	+75.0	-75.0	+69.6	-69.6	+65.2	-65.2
74"	A,B,G,H	+75.0	-75.0	+75.0	-75.0	+75.0	-75.0	+75.0	-75.0	+75.0	-75.0	+75.0	-75.0	+68.1	-68.1	+63.8	-63.8
UP TO 74"	C,D,E,F, I,J,K, L															+75.0	-75.0

PRODUCT REVISED
as complying with the Florida Building Code
Acceptance No 11-0630.02
Expiration Date 12/21/2016
By [signature]
Miami Dade Product Control

GLASS TYPES: TEST REPORT FTL-4858 (XOX), FTL-4859 (OX & XO) AND FTL-5330

A. 5/16" LAMI - (1/8" A, .090,1/8" A)
B. 5/16" LAMI - (1/8" A, .090,1/8" HS)
C. 5/16" LAMI - (1/8" HS, .090,1/8" HS)
D. 7/16" LAMI - (3/16" A, .090, 3/16" A)
E. 7/16" LAMI - (3/16" A, .090, 3/16" HS)
F. 7/16" LAMI - (3/16" HS, .090, 3/16" HS)
G. 13/16" LAMI IG-1/8" OR 3/16"A (MIN.), 5/16" OR 3/8" AIR SPACE, 5/16" LAMI - (1/8"A, .090,1/8"A)
H. 13/16" LAMI IG-1/8" OR 3/16"A (MIN.), 5/16" OR 3/8" AIR SPACE, 5/16" LAMI - (1/8"A, .090,1/8"HS)
I. 13/16" LAMI IG-1/8" OR 3/16"A (MIN.), 5/16" OR 3/8" AIR SPACE, 5/16" LAMI - (1/8"HS, .090,1/8"HS)
J. 13/16" LAMI IG-1/8" OR 3/16"A (MIN.), 3/16" OR 1/4" SPACE, 7/16" LAMI - (3/16"A, .090, 3/16"A)
K. 13/16" LAMI IG-1/8" OR 3/16"A (MIN.), 3/16" OR 1/4" SPACE, 7/16" LAMI - (3/16"A, .090, 3/16"HS)
L. 13/16" LAMI IG-1/8" OR 3/16"A (MIN.), 3/16" OR 1/4" SPACE, 7/16" LAMI - (3/16"HS, .090, 3/16"HS)

Revsd By:	Date:	Revisions:	
J.R.	6/20/11	D	ADDED IG CAP TO BE TEMPERED @ +30FT NOTE.
F.K.	4/15/07	C	ADD INTEGRAL FIN OPTION & UPDATE ASTM E 1300-02 DPs
F.K.	10/17/06	B	REVISE DP TABLES TO ASTM E 1300-02
Drawn By: F.K.	Date: 2/28/06	Checked By: J.J.	Date: 3/23/06

1070 TECHNOLOGY DRIVE
NOKOMIS, FL 34275
P.O. BOX 1529
NOKOMIS, FL 34274

PGT Visibly Better

Description: DESIGN PRESSURES
Title: ALUM. HORIZONTAL ROLLER WINDOW, IMPACT

Series/Model:	Scale:	Sheet:	Drawing No.	Rev:
HR710	NTS	3 of 11	4127-10	D

6/29/11
Robert L. Clark, P.E.
PE #39712
Structural

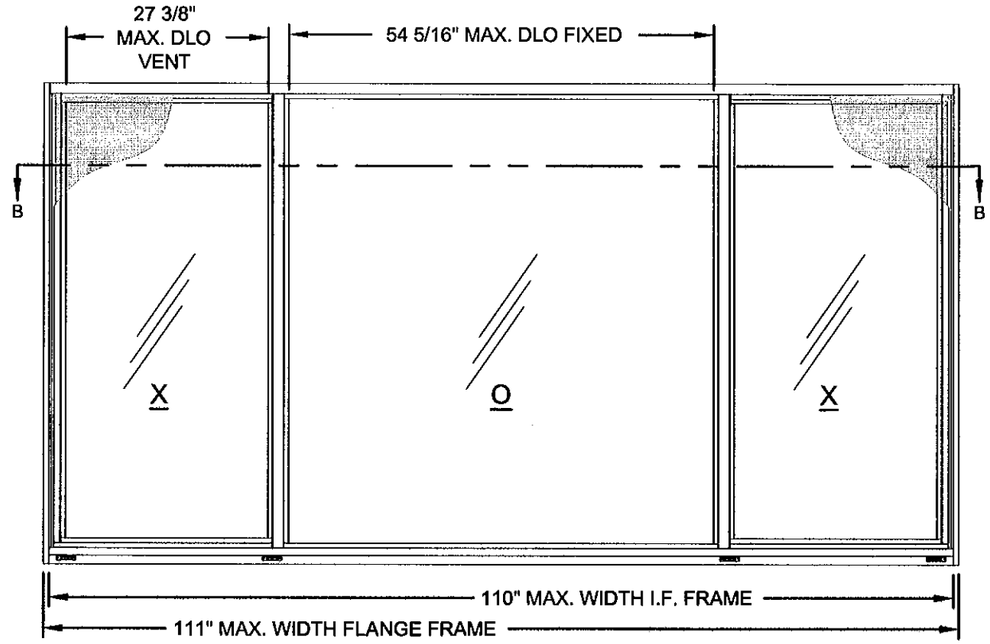

DETAIL B - XOX (1/4-1/2-1/4)

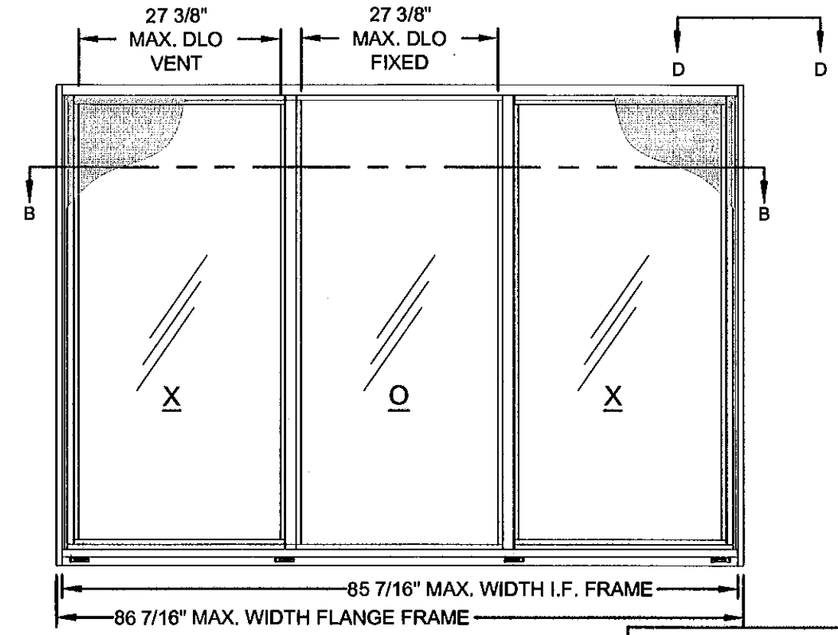

DETAIL C - XOX (1/3-1/3-1/3)

NOTE:

1. SEE SHEET 5 FOR VERTICAL AND HORIZONTAL SECTION DETAILS.

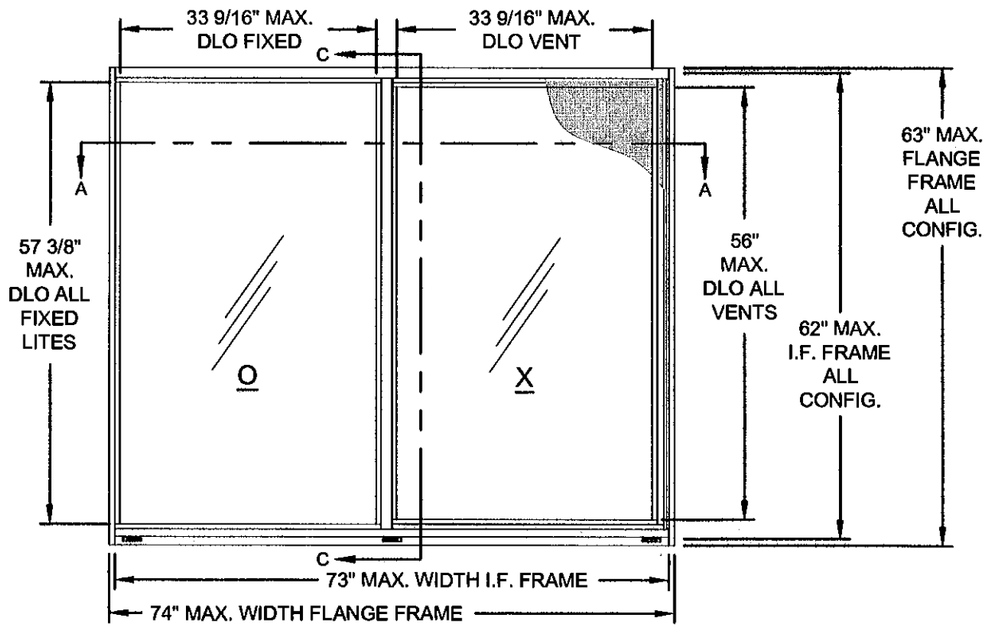

DETAIL A - OX OR XO

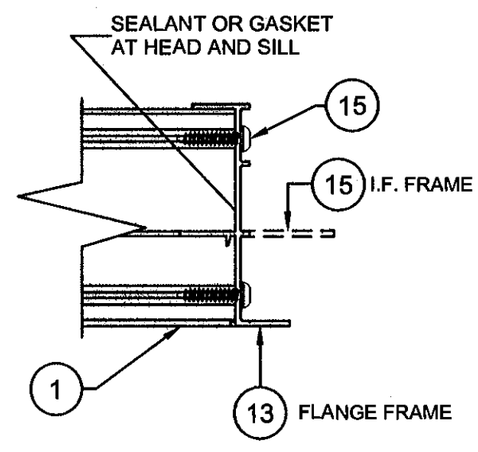

VIEW D-D
(FRAME CORNER CONSTRUCTION)

PRODUCT REVISED
as complying with the Florida
Building Code
Acceptance No 11-0630.02
Expiration Date 12/21/2016
By
Miami Dade Product Control

6/29/11

Robert L. Clark, P.E.
PE #39712
Structural

Revsd By:	Date:	Revisions:	
J.R.	6/20/11	D	NO CHANGE THIS SHEET
F.K.	4/15/07	C	ADD INTEGRAL FIN FRAME MAX. DIMENSIONS AND CORNER CONSTRUCTION DETAIL FROM SHT. 6.
F.K.	10/17/06	B	NO CHANGE THIS SHEET
Drawn By: F.K.	Date: 2/28/06	Checked By: J.J.	Date: 3/23/06

1070 TECHNOLOGY DRIVE
NOKOMIS, FL 34275

P.O. BOX 1529
NOKOMIS, FL 34274

PGT
Visibly Better

Description: ELEVATIONS

Title: ALUM. HORIZONTAL ROLLER WINDOW, IMPACT

Series/Model:	Scale:	Sheet:	Drawing No.	Rev:
HR710	NTS	4 of 11	4127-10	D

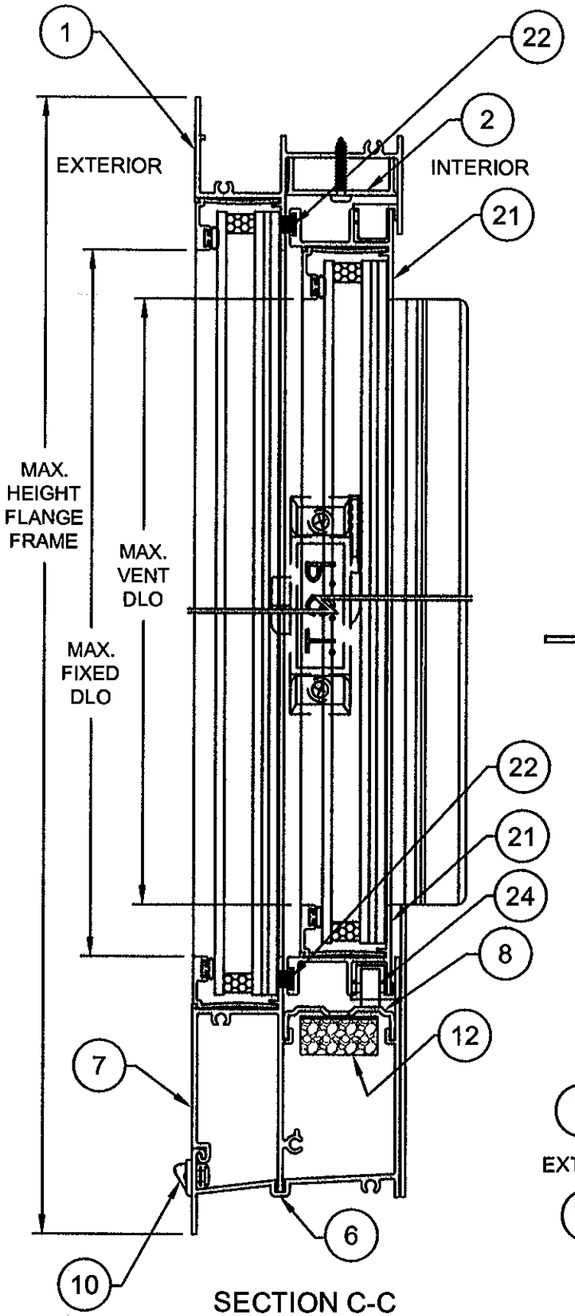

SECTION C-C
(VERTICAL SECTION, FLANGE FRAME)

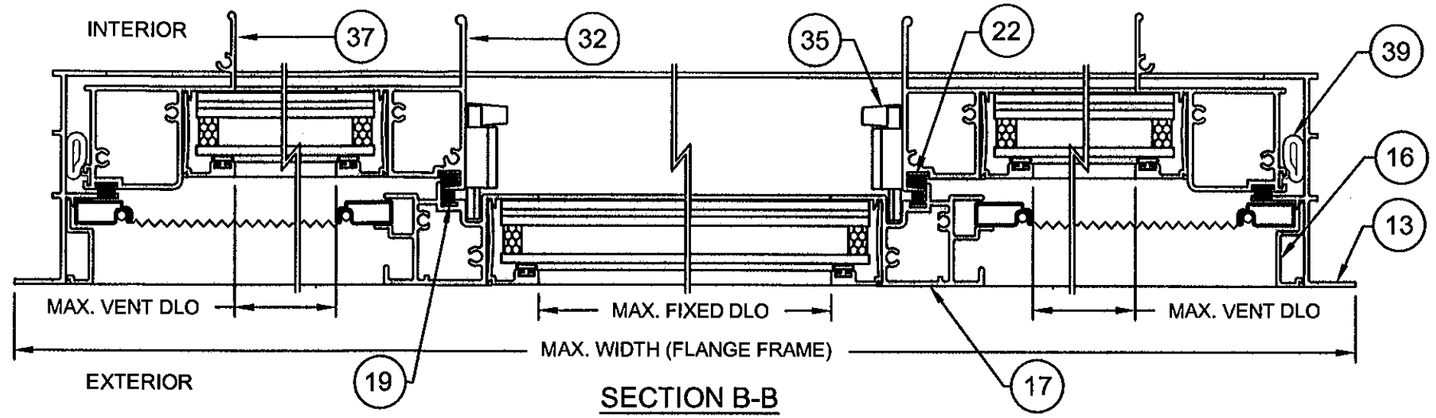

SECTION B-B
(HORIZONTAL SECTION - XOX SHOWN WITH FLANGE FRAME)

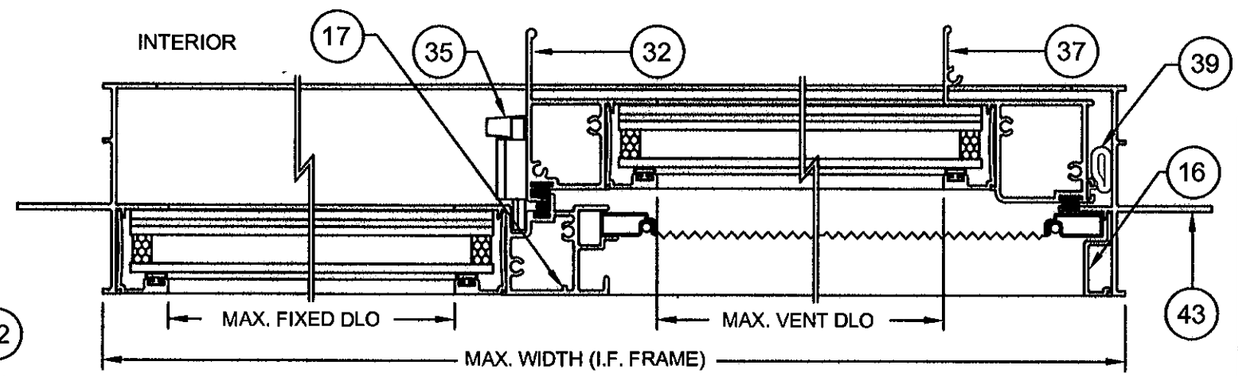

SECTION A-A
(HORIZONTAL SECTION - OX SHOWN WITH INTEGRAL FIN FRAME)

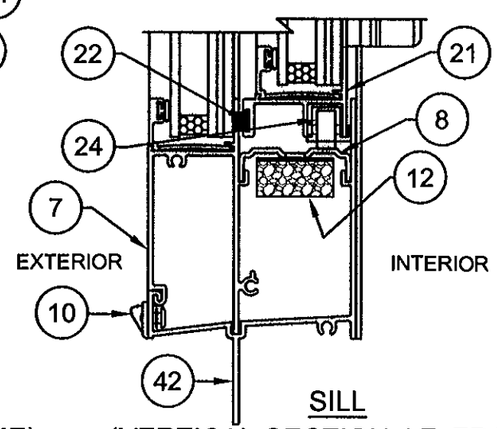

SILL
(VERTICAL SECTION, I.F. FRAME)

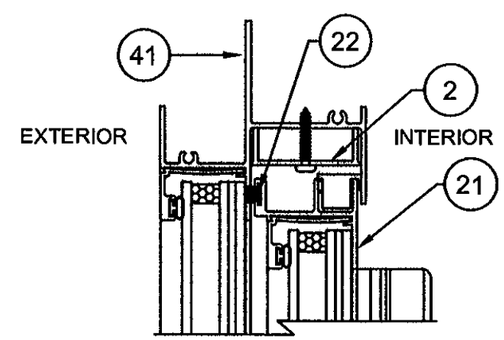

HEAD
(VERTICAL SECTION, I.F. FRAME)

PRODUCT REVISED
as complying with the Florida
Building Code
Acceptance No 11-0630.02
Expiration Date 12/12/2016
By
Miami Dade Product Control

6/29/11

Robert L. Clark, P.E.
PE #39712
Structural

Revised By:	Date:	Revisions:	
J.R.	6/20/11	D	NO CHANGE THIS SHEET
F.K.	4/15/07	C	ADD INTEGRAL FIN FRAME, ITEMS 41, 42 AND 43 AND VIEWS.
F.K.	10/17/06	B	NO CHANGE THIS SHEET
Drawn By: F.K.	Date: 2/28/06	Checked By: J.J.	Date: 3/23/06

1070 TECHNOLOGY DRIVE
NOKOMIS, FL 34275

P.O. BOX 1529
NOKOMIS, FL 34274

PGT
Visibly Better

Description: SECTIONS

Title: ALUM. HORIZONTAL ROLLER WINDOW, IMPACT

Series/Model:	Scale:	Sheet:	Drawing No.	Rev:
HR710	Half	5 of 11	4127-10	D

ITEM	DWG#	REV	DESCRIPTION	MAT'L	PGT#
1	4102	A	FLANGE FRAME HEAD	6063-T6 AL	612237
2	4025		SASH STOP (STD.) (ANTI LIFT CLIP)	6063-T5 AL	612244
3			#8 X 3/4 PH. PAN HEAD		7834AA
4	4053		SASH STOP COVER (SASH STOP)	6063-T5 AL	
6	4136		FLANGE FRAME SILL	6063-T6 AL	64136
7	4137		SILL ADAPTOR	6063-T6 AL	64137
8	4131		ROLLER TRACK	6063-T6 AL	64131
10	71298		WEEP HOLE COVER	POLYPROP.	71298
12	1626		ADHESIVE OPEN CELL FOAM PAD		7PAD1626
13	4002	A	FLANGE FRAME JAMB	6063-T6 AL	612225
14	4134		GASKET FOR MAIN FRAME SILL JOINT		74134W/K
15	1155		#8 X 1.000 QUAD PN. SMS		781PQA
16	4110	G	SCREEN ADAPTOR	6063-T5 AL	64110G
17	4054	B	FIXED MEETING RAIL	6063HD-T6 AL	64054A
19	4066		WSTP.,.187 X .230, FIN SEAL		64066G
21	4105		SASH TOP & BOTTOM RAIL	6063-T5 AL	612240
22	1683		WSTP.,.250 X .270 BACK, FIN SEAL		61683G
23	225-1		ROLLER HOUSING & GUIDE		42112HD
24	226		BRASS ROLLER WHEELS	BRASS	7BRWHL2
29	4128		HORIZONTAL ROLLER SASH TOP GUIDE	POLYPROP.	44128N
32	4006	D	SASH MEETING RAIL	6063HS-T6 AL	64006
33	1235		WSTP.,.170 X .270 BACK, FIN SEAL		67S16G
35	1096		SWEEP LATCH	DIE-CAST	71096
36	1016		#8 X .625 PH. FL. SMS		7858
37	4126		SASH SIDE RAIL	6063-T5 AL	64126
38	1683		WSTP.,.250 X .270 BACK, FIN SEAL		61683G
39	7070		BULB WEATHERSTRIP .187 X .275		67070K
40			LIFT RAIL COVER CAP		74078"C" L OR R
41	4139		I.F. FRAME HEAD	6063-T6 AL	64139
42	4140		I.F. FRAME SILL	6063-T6 AL	64140
43	4141		I.F. FRAME JAMB	6063-T6 AL	64141
50			GLAZING SILICONE, DOW 899, 995 OR EQUIVALENT		
51	1224		VINYL GLAZING BEAD BULB (THICK)		6TP247W,K
52	1225		VINYL GLAZING BEAD BULB (THIN)		6TP248K
53	4039	B	GLAZING BEAD - 5/16"	6063-T5 AL	64039B
54	4044	B	GLAZING BEAD - 5/16" W/GRILL KIT	6063-T5 AL	644703
55	4222	A	GLAZING BEAD - 7/16"	6063-T5 AL	64222
56	985	C	GLAZING BEAD - 7/16" W/GRILL KIT	6063-T5 AL	6985
59	4067		GLAZING BEAD - 13/16"	6063-T5 AL	64067
60	GLASS,		5/16" LAMI (1/8" A, .090 PVB, 1/8" A)		
61	"		5/16" LAMI (1/8" A, .090 PVB, 1/8" HS)		
62	"		5/16" LAMI (1/8" HS, .090 PVB, 1/8" HS)		
63	"		7/16" LAMI (3/16" A, .090 PVB, 3/16" A)		
64	"		7/16" LAMI (3/16" A, .090 PVB, 3/16" HS)		
65	"		7/16" LAMI (3/16" HS, .090 PVB, 3/16" HS)		
66	GLASS,		13/16" LAMI IG-1/8"A (MIN.), 3/8" AIR SPACE, 5/16" LAMI (1/8"A, .090 PVB, 1/8"A)		
67	"		13/16" LAMI IG-1/8"A (MIN.), 3/8" AIR SPACE, 5/16" LAMI (1/8"A, .090 PVB, 1/8"HS)		
68	"		13/16" LAMI IG-1/8"A (MIN.), 3/8" AIR SPACE, 5/16" LAMI (1/8"HS, .090 PVB, 1/8"HS)		
69	"		13/16" LAMI IG-3/16"A (MIN.), 5/16" AIR SPACE, 5/16" LAMI (1/8"A, .090 PVB, 1/8"A)		
70	"		13/16" LAMI IG-3/16"A (MIN.), 5/16" AIR SPACE, 5/16" LAMI (1/8"A, .090 PVB, 1/8"HS)		
71	"		13/16" LAMI IG-3/16"A (MIN.), 5/16" AIR SPACE, 5/16" LAMI (1/8"HS, .090 PVB, 1/8"HS)		
72	"		13/16" LAMI IG-1/8"A (MIN.), 1/4" AIR SPACE, 7/16" LAMI (3/16"A, .090 PVB, 3/16"A)		
73	"		13/16" LAMI IG-1/8"A (MIN.), 1/4" AIR SPACE, 7/16" LAMI (3/16"A, .090 PVB, 3/16"HS)		
74	"		13/16" LAMI IG-1/8"A (MIN.), 1/4" AIR SPACE, 7/16" LAMI (3/16"HS, .090 PVB, 3/16"HS)		
75	"		13/16" LAMI IG-3/16"A (MIN.), 3/16" AIR SPACE, 7/16" LAMI (3/16"A, .090 PVB, 3/16"A)		
76	"		13/16" LAMI IG-3/16"A (MIN.), 3/16" AIR SPACE, 7/16" LAMI (3/16"A, .090 PVB, 3/16"HS)		
77	"		13/16" LAMI IG-3/16"A (MIN.), 3/16" AIR SPACE, 7/16" LAMI (3/16"HS, .090 PVB, 3/16"HS)		
90	1014		SCREEN FRAME (HOR. & VER.)	3105-H14 AL	
91	1630		SCREEN CORNER KEY W/RINGS	POLYPROP.	
92	1631		SCREEN CORNER KEY W/OUT RINGS	POLYPROP.	
93	1073		SCREEN SPRING	ST.ST.	
94	1624		SCREEN SPLINE - .135 DIA. FOAM	EM PVC	
95	1635		SCREEN SPLINE - .135 DIA. HARD	EM PVC	
96			SCREEN	CLOTH	

D

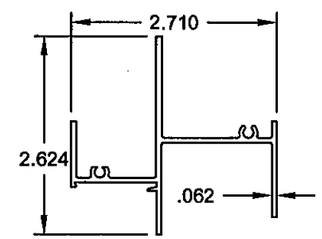

41 I.F. FRAME HEAD
#4139, 6063-T6

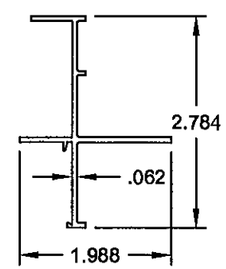

43 I.F. FRAME JAMB
#4141, 6063-T6

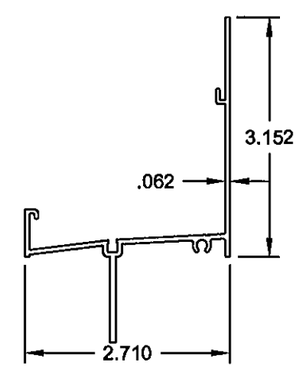

42 I.F. FRAME SILL
#4140, 6063-T6

PRODUCT REVISED
as complying with the Florida
Building Code
Acceptance No 11-0630.02
Expiration Date 12/12/2016
By
Miami Dade Product Control

6/28/11

Robert L. Clark, P.E.
PE #39712
Structural

Revsd By:	Date:	Revisions:	
J.R.	6/20/11	D	ADDED "(MIN.)" TO GLASS TYPES
F.K.	4/15/07	C	ADD ITEMS 41, 42 & 43
F.K.	10/17/06	B	NO CHANGE THIS SHEET
Drawn By: F.K.	Date: 2/28/06	Checked By: J.J.	Date: 3/23/06

1070 TECHNOLOGY DRIVE
NOKOMIS, FL 34275

P.O. BOX 1529
NOKOMIS, FL 34274

PGT
Visibly Better

Description: PARTS LIST

Title: ALUM. HORIZONTAL ROLLER WINDOW, IMPACT

Series/Model:	Scale:	Sheet:	Drawing No.	Rev:
HR710	NTS	6 of 11	4127-10	D

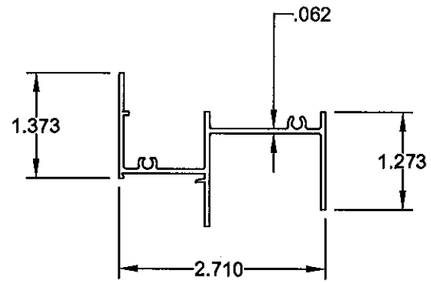

1 FLANGE FRAME HEAD
#4102A, 6063-T6

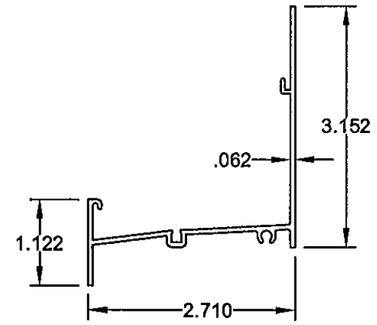

6 FLANGE FRAME SILL
#4136, 6063-T6

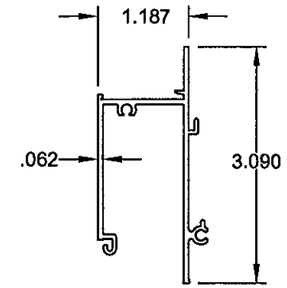

7 FRAME SILL ADAPTER
#4137, 6063-T6

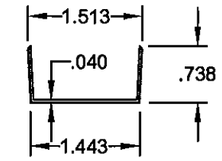

4 SASH STOP COVER
#4053, 6063-T5

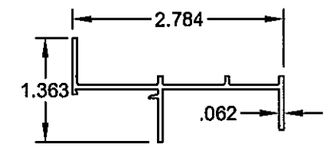

13 FLANGE FRAME JAMB
#4002A, 6063-T6

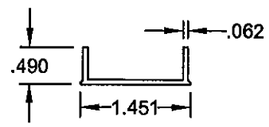

2 SASH STOP
#4025, 6063-T5

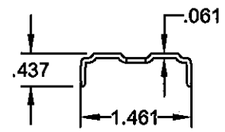

8 HORIZ. ROLLER TRACK
#4131, 6063-T6

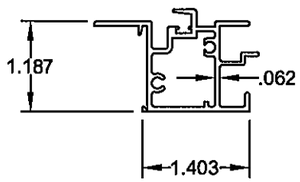

17 FIXED MEETING RAIL
#4054B, 6063HD-T6

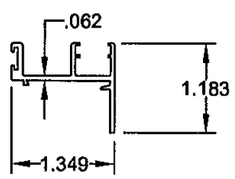

21 SASH TOP & BOTTOM RAIL
#4133, 6063-T5

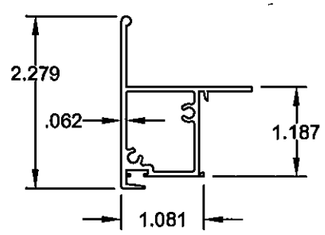

32 SASH MTG. RAIL
#4006D, 6063HS-T6

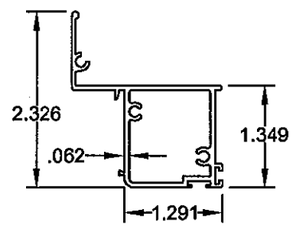

37 SASH SIDE RAIL
#4126, 6063-T5

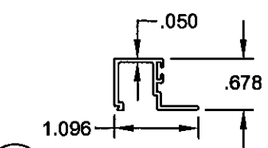

53 GLAZING BEAD, 5/16"
#4039B, 6063-T5

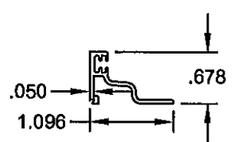

54 GLAZING BEAD, 5/16"
#4044B, 6063-T5
(USED W/ GRILL KIT)

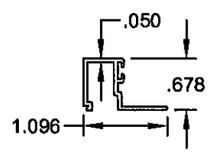

55 GLAZING BEAD 7/16"
#4222A, 6063-T5

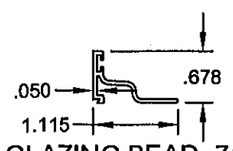

56 GLAZING BEAD, 7/16"
#985C, 6063-T5
(USED W/ GRILL KIT)

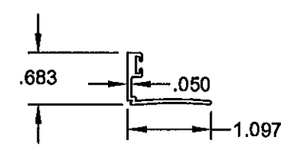

59 GLAZING BEAD, 13/16"
#4067, 6063-T5

PRODUCT REVISED
as complying with the Florida
Building Code
Acceptance No 11-0630.02
Expiration Date 12/21/2016
By
Miami Dade Product Control

6/29/11
Robert L. Clark, P.E.
PE #39712
Structural

Revsd By:	Date:	Revisions:	
J.R.	6/20/11	D	NO CHANGE THIS SHEET
F.K.	4/15/07	C	NO CHANGE THIS SHEET
F.K.	10/17/06	B	NO CHANGE THIS SHEET
Drawn By: F.K.	Date: 2/28/06	Checked By: J.J.	Date: 3/23/06

1070 TECHNOLOGY DRIVE
NOKOMIS, FL 34275

P.O. BOX 1529
NOKOMIS, FL 34274

PGT
Visibly Better

Description: EXTRUSIONS

Title: ALUM. HORIZONTAL ROLLER WINDOW, IMPACT

Series/Model:	Scale:	Sheet:	Drawing No.	Rev:
HR710	Half	7 of 11	4127-10	D

ANCHOR QUANTITIES, XOX (1/4-1/2-1/4) WINDOWS

TABLE 4

ANCHOR TYPE > & SUBSTRATE	GLASS TYPES A,B,C,G,H,I						GLASS TYPES D,E,F,J,K,L					
	2,3, WOOD ZONES		2, CONC ZONES		1, CONC ZONES		2,3, WOOD ZONES		2, CONC ZONES		1, CONC ZONES	
WINDOW SIZE W x H	HEAD & SILL	JAMBS	HEAD & SILL	JAMBS	HEAD & SILL	JAMBS	HEAD & SILL	JAMBS	HEAD & SILL	JAMBS	HEAD & SILL	JAMBS
53.125 x 38.375	1+C2+1+C2+1	2	1+C2+1+C2+1	2	1+C2+1+C2+1	2	1+C2+1+C2+1	2	1+C2+1+C2+1	2	1+C2+1+C2+1	2
48.000	1+C2+1+C2+1	3	1+C2+1+C2+1	3	1+C2+1+C2+1	3	1+C2+1+C2+1	3	1+C2+1+C2+1	3	1+C2+1+C2+1	3
50.625	1+C2+1+C2+1	3	1+C2+1+C2+1	3	1+C2+1+C2+1	3	1+C2+1+C2+1	3	1+C2+1+C2+1	3	1+C2+1+C2+1	3
54.000	1+C2+1+C2+1	3	1+C2+1+C2+1	3	1+C2+1+C2+1	3	1+C2+1+C2+1	3	1+C2+1+C2+1	3	1+C2+1+C2+1	3
60.000	1+C2+1+C2+1	3	1+C2+1+C2+1	3	1+C2+1+C2+1	3	1+C2+1+C2+1	3	1+C2+1+C2+1	3	1+C2+1+C2+1	3
63.000	1+C2+1+C2+1	3	1+C2+1+C2+1	3	1+C2+1+C2+1	3	1+C2+1+C2+1	3	1+C2+1+C2+1	3	1+C3+1+C3+1	3
60.000 x 38.375	1+C2+1+C2+1	2	1+C2+1+C2+1	2	1+C2+1+C2+1	2	1+C2+1+C2+1	2	1+C2+1+C2+1	2	1+C2+2+C2+1	2
48.000	1+C2+1+C2+1	3	1+C2+1+C2+1	3	1+C2+1+C2+1	3	1+C2+1+C2+1	3	1+C2+1+C2+1	3	1+C2+2+C2+1	3
50.625	1+C2+1+C2+1	3	1+C2+1+C2+1	3	1+C2+1+C2+1	3	1+C2+1+C2+1	3	1+C2+1+C2+1	3	1+C2+2+C2+1	3
54.000	1+C2+1+C2+1	3	1+C2+1+C2+1	3	1+C2+1+C2+1	3	1+C2+1+C2+1	3	1+C2+1+C2+1	3	1+C2+2+C2+1	3
60.000	1+C2+1+C2+1	3	1+C2+1+C2+1	3	1+C2+1+C2+1	3	1+C2+1+C2+1	3	1+C2+1+C2+1	3	1+C3+2+C3+1	3
63.000	1+C2+1+C2+1	3	1+C2+1+C2+1	3	1+C2+1+C2+1	3	1+C2+1+C2+1	3	1+C2+1+C2+1	3	1+C3+2+C3+1	3
74.000 x 38.375	1+C2+2+C2+1	2	1+C2+1+C2+1	2	1+C2+2+C2+1	2	1+C2+2+C2+1	2	1+C2+2+C2+1	2	1+C2+2+C2+1	2
48.000	1+C2+2+C2+1	3	1+C2+1+C2+1	3	1+C2+2+C2+1	3	1+C2+2+C2+1	3	1+C2+2+C2+1	3	1+C2+2+C2+1	3
50.625	1+C2+2+C2+1	3	1+C2+1+C2+1	3	1+C2+2+C2+1	3	1+C2+2+C2+1	3	1+C2+2+C2+1	3	1+C2+2+C2+1	3
54.000	1+C2+2+C2+1	3	1+C2+1+C2+1	3	1+C2+2+C2+1	3	1+C2+2+C2+1	3	1+C2+2+C2+1	3	1+C3+2+C3+1	3
60.000	1+C2+2+C2+1	3	1+C2+1+C2+1	3	1+C2+2+C2+1	3	1+C2+2+C2+1	3	1+C2+2+C2+1	3	1+C3+2+C3+1	3
63.000	1+C2+2+C2+1	3	1+C2+1+C2+1	3	1+C3+2+C3+1	3	1+C3+2+C3+1	3	1+C2+2+C2+1	3	1+C3+2+C3+1	3
84.000 x 38.375	1+C2+2+C2+1	2	1+C2+2+C2+1	2	1+C2+2+C2+1	2	1+C2+2+C2+1	2	1+C2+2+C2+1	2	1+C2+3+C2+1	2
48.000	1+C2+2+C2+1	3	1+C2+2+C2+1	3	1+C2+2+C2+1	3	1+C2+2+C2+1	3	1+C2+2+C2+1	3	1+C3+3+C3+1	3
50.625	1+C2+2+C2+1	3	1+C2+2+C2+1	3	1+C2+2+C2+1	3	1+C2+2+C2+1	3	1+C2+2+C2+1	3	1+C3+3+C3+1	3
54.000	1+C2+2+C2+1	3	1+C2+2+C2+1	3	1+C2+2+C2+1	3	1+C2+2+C2+1	3	1+C2+2+C2+1	3	1+C4+3+C4+1	3
60.000	1+C2+2+C2+1	3	1+C2+2+C2+1	3	1+C3+2+C3+1	3	1+C3+2+C3+1	3	1+C2+2+C2+1	3	1+C4+3+C4+1	3
63.000	1+C2+2+C2+1	3	1+C2+2+C2+1	3	1+C3+2+C3+1	3	1+C3+2+C3+1	3	1+C2+2+C2+1	3	1+C4+3+C4+1	3
106.375 x 38.375	1+C2+2+C2+1	2	1+C2+2+C2+1	2	1+C2+3+C2+1	2	1+C2+3+C2+1	2	1+C2+3+C2+1	2	1+C2+4+C2+1	2
48.000	1+C2+3+C2+1	3	1+C2+2+C2+1	3	1+C3+3+C3+1	3	1+C3+3+C3+1	3	1+C2+3+C2+1	3	1+C3+4+C3+1	3
50.625	1+C2+3+C2+1	3	1+C2+2+C2+1	3	1+C3+3+C3+1	3	1+C3+3+C3+1	3	1+C3+3+C3+1	3	1+C3+4+C3+1	3
54.000	1+C3+3+C3+1	3	1+C2+2+C2+1	3	1+C3+3+C3+1	3	1+C3+3+C3+1	3	1+C3+3+C3+1	3	1+C4+4+C4+1	3
60.000	1+C3+3+C3+1	3	1+C2+2+C2+1	3	1+C4+3+C4+1	3	1+C4+3+C4+1	4	1+C3+3+C3+1	3	1+C4+4+C4+1	3
63.000	1+C3+3+C3+1	3	1+C2+2+C2+1	3	1+C4+3+C4+1	3	1+C4+3+C4+1	4	1+C4+3+C4+1	3	1+C5+4+C5+1	3
111.000 x 38.375	1+C2+3+C2+1	2	1+C2+2+C2+1	2	1+C2+3+C2+1	2	1+C2+3+C2+1	3	1+C2+3+C2+1	2	1+C2+4+C2+1	2
48.000	1+C2+3+C2+1	3	1+C2+2+C2+1	3	1+C3+3+C3+1	3	1+C3+3+C3+1	3	1+C2+3+C2+1	3	1+C3+4+C3+1	3
50.625	1+C2+3+C2+1	3	1+C2+2+C2+1	3	1+C3+3+C3+1	3	1+C3+3+C3+1	3	1+C3+3+C3+1	3	1+C3+4+C3+1	3
54.000	1+C3+3+C3+1	3	1+C2+2+C2+1	3	1+C3+3+C3+1	3	1+C3+3+C3+1	3	1+C3+3+C3+1	3	1+C4+4+C4+1	3
60.000	1+C3+3+C3+1	3	1+C2+2+C2+1	3	1+C4+3+C4+1	3	1+C4+3+C4+1	4	1+C3+3+C3+1	3	1+C4+4+C4+1	3
63.000	1+C3+3+C3+1	3	1+C2+2+C2+1	3	1+C4+3+C4+1	3	1+C4+3+C4+1	4	1+C4+3+C4+1	3	1+C5+4+C5+1	4

NOTES:

1. ANCHOR TYPES:
   1 - 1/4" ELCO TAPCONS 2 - 1/4" ELCO SS4 CRETE-FLEX 3 - #12 STEEL SCREWS (G5)

2. GLASS TYPES:
   A. 5/16" LAMI - (1/8" A,.090, 1/8" A)
   B. 5/16" LAMI - (1/8" A,.090, 1/8" HS)
   C. 5/16" LAMI - (1/8" HS,.090, 1/8" HS)
   D. 7/16" LAMI - (3/16" A,.090, 3/16" A)
   E. 7/16" LAMI - (3/16" A,.090, 3/16" HS)
   F. 7/16" LAMI - (3/16" HS,.090, 3/16" HS)
   G. 13/16" LAMI IG - 1/8" OR 3/16" A (MIN.), 5/16" OR 3/8" SPACE, 5/16" LAMI - (1/8" A,.090, 1/8" A)
   H. 13/16" LAMI IG - 1/8" OR 3/16" A (MIN.), 5/16" OR 3/8" SPACE, 5/16" LAMI - (1/8" A,.090, 1/8" HS)
   I. 13/16" LAMI IG - 1/8" OR 3/16" A (MIN.), 5/16" OR 3/8" SPACE, 5/16" LAMI - (1/8" HS,.090, 1/8" HS)
   J. 13/16" LAMI IG - 1/8" OR 3/16" A (MIN.), 3/16" OR 1/4" SPACE, 7/16" LAMI - (3/16" A,.090, 3/16" A)
   K. 13/16" LAMI IG - 1/8" OR 3/16" A (MIN.), 3/16" OR 1/4" SPACE, 7/16" LAMI - (3/16" A,.090, 3/16" HS)
   L. 13/16" LAMI IG - 1/8" OR 3/16" A (MIN.), 3/16" OR 1/4" SPACE, 7/16" LAMI - (3/16" HS,.090, 3/16" HS)

D

FOR INSTALLATION IN THE HVHZ ABOVE 30 FT, GLASS TYPES G - L SHALL HAVE A TEMPERED I.G. GLASS CAP. BOTH THE DP AND ANCHOR QUANTITY REMAIN UNCHANGED.

3. WINDOW ANCHOR QUANTITIES ARE PER ADJACENT TABLE AND BASED ON THE FOLLOWING DIMENSIONS. FOR WINDOW SIZES NOT SHOWN, GO TO NEXT LARGER WINDOW IN TABLE.

   HEAD & SILL: 10 1/2" MAX. ON EACH SIDE OF MEETING RAIL CENTERLINE.
   25 3/4" MAX. FROM CORNERS.
   JAMBS: 9" MAX. FROM CORNERS AND 22 1/2" MAX. O.C.

TABLE KEY:

X O X

1+C3+4+C3+1	3

ANCHOR QUANTITY PER JAMB

HEAD AND SILL ANCHOR QUANTITY. A CLUSTER OF (3) ANCHORS CENTERED AT EACH MEETING RAIL PLUS (1) ANCHOR AT EACH OPERABLE VENT PLUS (4) ANCHORS AT FIXED SECTION. (12) ANCHORS TOTAL AT HEAD AND SILL.

(3" MIN. O.C. ANCHOR SPACING)

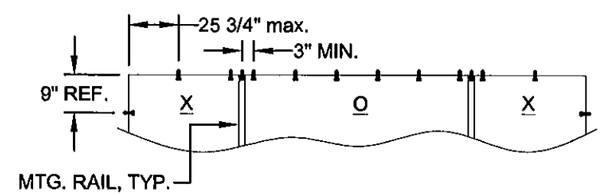

EXAMPLE CLUSTER W/ QTY. OF (3) ANCHORS
(SHOWN IN TABLE KEY ABOVE)

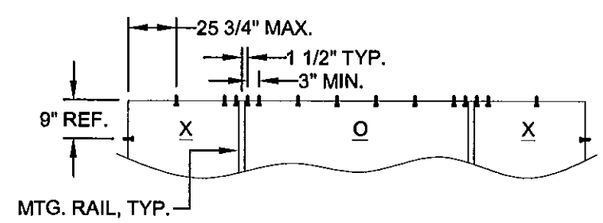

EXAMPLE CLUSTER W/ QTY. OF (4) ANCHORS

PRODUCT REVISED
as complying with the Florida Building Code
Acceptance No. 11-0630.02
Expiration Date 12/21/2016
By
Miami Dade Product Control

6/29/11
Robert L. Clark, P.E.
PE #39712
Structural

Revsd By:	Date:	Revisions:	
J.R.	6/20/11	D	ADDED IG CAP TO BE TEMPERED @ +30FT NOTE.
F.K.	4/15/07	C	UPDATE TABLE 4, SELECT VALUES DUE TO ANCHOR CAP. ADJ.
F.K.	10/17/06	B	REVISE ANCHORAGE FORMAT, HEAD & SILL CLUSTERS
Drawn By: F.K.	Date: 2/28/06	Checked By: J.J.	Date: 3/23/06

1070 TECHNOLOGY DRIVE
NOKOMIS, FL 34275
P.O. BOX 1529
NOKOMIS, FL 34274

PGT Visibly Better

Description: ANCHORAGE SPACING, XOX (1/4-1/2-1/4)

Title: ALUM. HORIZONTAL ROLLER WINDOW, IMPACT

Series/Model:	Scale:	Sheet:	Drawing No.	Rev:
HR710	NTS	8 of 11	4127-10	D

ANCHOR QUANTITIES, XOX (1/3-1/3-1/3) WINDOWS — TABLE 5

ANCHOR TYPE > & SUBSTRATE	GLASS TYPES A,B,G,H						GLASS TYPES C,D,E,F,I,J,K, L					
	2,3, WOOD ZONES		2, CONC ZONES		1, CONC ZONES		2,3, WOOD ZONES		2, CONC ZONES		1, CONC ZONES	
WINDOW SIZE W x H	HEAD & SILL	JAMBS	HEAD & SILL	JAMBS	HEAD & SILL	JAMBS	HEAD & SILL	JAMBS	HEAD & SILL	JAMBS	HEAD & SILL	JAMBS
48.000 x 38.375	1+C2+1+C2+1	2	1+C2+1+C2+1	2	1+C2+1+C2+1	2	1+C2+1+C2+1	2	1+C2+1+C2+1	2	1+C2+1+C2+1	2
48.000	1+C2+1+C2+1	3	1+C2+1+C2+1	3	1+C2+1+C2+1	3	1+C2+1+C2+1	3	1+C2+1+C2+1	3	1+C2+1+C2+1	3
50.625	1+C2+1+C2+1	3	1+C2+1+C2+1	3	1+C2+1+C2+1	3	1+C2+1+C2+1	3	1+C2+1+C2+1	3	1+C2+1+C2+1	3
54.000	1+C2+1+C2+1	3	1+C2+1+C2+1	3	1+C2+1+C2+1	3	1+C2+1+C2+1	3	1+C2+1+C2+1	3	1+C2+1+C2+1	3
60.000	1+C2+1+C2+1	3	1+C2+1+C2+1	3	1+C2+1+C2+1	3	1+C2+1+C2+1	3	1+C2+1+C2+1	3	1+C2+1+C2+1	3
63.000	1+C2+1+C2+1	3	1+C2+1+C2+1	3	1+C2+1+C2+1	3	1+C2+1+C2+1	3	1+C2+1+C2+1	3	1+C3+1+C3+1	3
53.125 x 38.375	1+C2+1+C2+1	2	1+C2+1+C2+1	2	1+C2+1+C2+1	2	1+C2+1+C2+1	2	1+C2+1+C2+1	2	1+C2+1+C2+1	2
48.000	1+C2+1+C2+1	3	1+C2+1+C2+1	3	1+C2+1+C2+1	3	1+C2+1+C2+1	3	1+C2+1+C2+1	3	1+C2+1+C2+1	3
50.625	1+C2+1+C2+1	3	1+C2+1+C2+1	3	1+C2+1+C2+1	3	1+C2+1+C2+1	3	1+C2+1+C2+1	3	1+C2+1+C2+1	3
54.000	1+C2+1+C2+1	3	1+C2+1+C2+1	3	1+C2+1+C2+1	3	1+C2+1+C2+1	3	1+C2+1+C2+1	3	1+C2+1+C2+1	3
60.000	1+C2+1+C2+1	3	1+C2+1+C2+1	3	1+C2+1+C2+1	3	1+C2+1+C2+1	3	1+C2+1+C2+1	3	1+C3+1+C3+1	3
63.000	1+C2+1+C2+1	3	1+C2+1+C2+1	3	1+C2+1+C2+1	3	1+C2+1+C2+1	3	1+C2+1+C2+1	3	1+C3+1+C3+1	3
60.000 x 38.375	1+C2+1+C2+1	2	1+C2+1+C2+1	2	1+C2+1+C2+1	2	1+C2+1+C2+1	2	1+C2+1+C2+1	2	1+C2+1+C2+1	2
48.000	1+C2+1+C2+1	3	1+C2+1+C2+1	3	1+C2+1+C2+1	3	1+C2+1+C2+1	3	1+C2+1+C2+1	3	1+C2+1+C2+1	3
50.625	1+C2+1+C2+1	3	1+C2+1+C2+1	3	1+C2+1+C2+1	3	1+C2+1+C2+1	3	1+C2+1+C2+1	3	1+C2+1+C2+1	3
54.000	1+C2+1+C2+1	3	1+C2+1+C2+1	3	1+C2+1+C2+1	3	1+C2+1+C2+1	3	1+C2+1+C2+1	3	1+C3+1+C3+1	3
60.000	1+C2+1+C2+1	3	1+C2+1+C2+1	3	1+C2+1+C2+1	3	1+C2+1+C2+1	3	1+C2+1+C2+1	3	1+C3+1+C3+1	3
63.000	1+C2+1+C2+1	3	1+C2+1+C2+1	3	1+C2+1+C2+1	3	1+C3+1+C3+1	3	1+C2+1+C2+1	3	1+C3+1+C3+1	3
66.000 x 38.375	1+C2+1+C2+1	2	1+C2+1+C2+1	2	1+C2+1+C2+1	2	1+C2+1+C2+1	2	1+C2+1+C2+1	2	1+C2+1+C2+1	2
48.000	1+C2+1+C2+1	3	1+C2+1+C2+1	3	1+C2+1+C2+1	3	1+C2+1+C2+1	3	1+C2+1+C2+1	3	1+C2+1+C2+1	3
50.625	1+C2+1+C2+1	3	1+C2+1+C2+1	3	1+C2+1+C2+1	3	1+C2+1+C2+1	3	1+C2+1+C2+1	3	1+C3+1+C3+1	3
54.000	1+C2+1+C2+1	3	1+C2+1+C2+1	3	1+C2+1+C2+1	3	1+C2+1+C2+1	3	1+C2+1+C2+1	3	1+C3+1+C3+1	3
60.000	1+C2+1+C2+1	3	1+C2+1+C2+1	3	1+C2+1+C2+1	3	1+C3+1+C3+1	3	1+C2+1+C2+1	3	1+C3+1+C3+1	3
63.000	1+C2+1+C2+1	3	1+C2+1+C2+1	3	1+C3+1+C3+1	3	1+C3+1+C3+1	3	1+C2+1+C2+1	3	1+C3+1+C3+1	3
74.000 x 38.375	1+C2+1+C2+1	2	1+C2+1+C2+1	2	1+C2+1+C2+1	2	1+C2+1+C2+1	2	1+C2+1+C2+1	2	1+C2+1+C2+1	2
48.000	1+C2+1+C2+1	3	1+C2+1+C2+1	3	1+C2+1+C2+1	3	1+C2+1+C2+1	3	1+C2+1+C2+1	3	1+C3+1+C3+1	3
50.625	1+C2+1+C2+1	3	1+C2+1+C2+1	3	1+C2+1+C2+1	3	1+C2+1+C2+1	3	1+C2+1+C2+1	3	1+C3+1+C3+1	3
54.000	1+C2+1+C2+1	3	1+C2+1+C2+1	3	1+C2+1+C2+1	3	1+C2+1+C2+1	3	1+C2+1+C2+1	3	1+C3+1+C3+1	3
60.000	1+C2+1+C2+1	3	1+C2+1+C2+1	3	1+C3+1+C3+1	3	1+C3+1+C3+1	3	1+C2+1+C2+1	3	1+C3+1+C3+1	3
63.000	1+C2+1+C2+1	3	1+C2+1+C2+1	3	1+C3+1+C3+1	3	1+C3+1+C3+1	3	1+C2+1+C2+1	3	1+C3+1+C3+1	3
84.000 x 38.375	1+C2+1+C2+1	2	1+C2+1+C2+1	2	1+C2+1+C2+1	2	1+C2+1+C2+1	3	1+C2+1+C2+1	2	1+C2+1+C2+1	2
48.000	1+C2+1+C2+1	3	1+C2+1+C2+1	3	1+C2+1+C2+1	3	1+C2+1+C2+1	3	1+C2+1+C2+1	3	1+C3+1+C3+1	3
50.625	1+C2+1+C2+1	3	1+C2+1+C2+1	3	1+C2+1+C2+1	3	1+C2+1+C2+1	3	1+C2+1+C2+1	3	1+C3+1+C3+1	3
54.000	1+C2+1+C2+1	3	1+C2+1+C2+1	3	1+C3+1+C3+1	3	1+C3+1+C3+1	3	1+C2+1+C2+1	3	1+C3+1+C3+1	3
60.000	1+C2+1+C2+1	3	1+C2+1+C2+1	3	1+C3+1+C3+1	3	1+C3+1+C3+1	4	1+C3+1+C3+1	3	1+C3+1+C3+1	3
63.000	1+C3+1+C3+1	3	1+C2+1+C2+1	3	1+C3+1+C3+1	3	1+C3+1+C3+1	4	1+C3+1+C3+1	3	1+C4+1+C4+1	4
86.437 x 38.375	1+C2+1+C2+1	2	1+C2+1+C2+1	2	1+C2+1+C2+1	2	1+C2+1+C2+1	3	1+C2+1+C2+1	2	1+C2+1+C2+1	2
48.000	1+C2+1+C2+1	3	1+C2+1+C2+1	3	1+C2+1+C2+1	3	1+C2+1+C2+1	3	1+C2+1+C2+1	3	1+C3+1+C3+1	3
50.625	1+C2+1+C2+1	3	1+C2+1+C2+1	3	1+C2+1+C2+1	3	1+C2+1+C2+1	3	1+C2+1+C2+1	3	1+C3+1+C3+1	3
54.000	1+C2+1+C2+1	3	1+C2+1+C2+1	3	1+C3+1+C3+1	3	1+C3+1+C3+1	3	1+C2+1+C2+1	3	1+C3+1+C3+1	3
60.000	1+C2+1+C2+1	3	1+C2+1+C2+1	3	1+C3+1+C3+1	3	1+C3+1+C3+1	4	1+C3+1+C3+1	3	1+C4+1+C4+1	4
63.000	1+C3+1+C3+1	3	1+C2+1+C2+1	3	1+C3+1+C3+1	3	1+C3+1+C3+1	4	1+C3+1+C3+1	3	1+C4+1+C4+1	4

NOTES:

1. ANCHOR TYPES:
   1 - 1/4" ELCO TAPCONS 2 - 1/4" ELCO SS4 CRETE-FLEX 3 - #12 STEEL SCREWS (G5)

2. GLASS TYPES:
   A. 5/16" LAMI - (1/8" A,.090, 1/8" A)
   B. 5/16" LAMI - (1/8" A,.090, 1/8" HS)
   C. 5/16" LAMI - (1/8" HS,.090, 1/8" HS)
   D. 7/16" LAMI - (3/16" A,.090, 3/16" A)
   E. 7/16" LAMI - (3/16" A,.090, 3/16" HS)
   F. 7/16" LAMI - (3/16" HS,.090, 3/16" HS)
   G. 13/16" LAMI IG - 1/8" OR 3/16" A (MIN.), 5/16" OR 3/8" SPACE, 5/16" LAMI - (1/8" A,.090, 1/8" A)
   H. 13/16" LAMI IG - 1/8" OR 3/16" A (MIN.), 5/16" OR 3/8" SPACE, 5/16" LAMI - (1/8" A,.090, 1/8" HS)
   I. 13/16" LAMI IG - 1/8" OR 3/16" A (MIN.), 5/16" OR 3/8" SPACE, 5/16" LAMI - (1/8" HS,.090, 1/8" HS)
   J. 13/16" LAMI IG - 1/8" OR 3/16" A (MIN.), 3/16" OR 1/4" SPACE, 7/16" LAMI - (3/16" A,.090, 3/16" A)
   K. 13/16" LAMI IG - 1/8" OR 3/16" A (MIN.), 3/16" OR 1/4" SPACE, 7/16" LAMI - (3/16" A,.090, 3/16" HS)
   L. 13/16" LAMI IG - 1/8" OR 3/16" A (MIN.), 3/16" OR 1/4" SPACE, 7/16" LAMI - (3/16" HS,.090, 3/16" HS)

D — FOR INSTALLATION IN THE HVHZ ABOVE 30 FT, GLASS TYPES G - L SHALL HAVE A TEMPERED I.G. GLASS CAP. BOTH THE DP AND ANCHOR QUANTITY REMAIN UNCHANGED.

3. WINDOW ANCHOR QUANTITIES ARE PER ADJACENT TABLE AND BASED ON THE FOLLOWING DIMENSIONS. FOR WINDOW SIZES NOT SHOWN, GO TO NEXT LARGER WINDOW IN TABLE.

   HEAD & SILL: 10 1/2" MAX. ON EACH SIDE OF MEETING RAIL CENTERLINE
   25 3/4" MAX. FROM CORNERS
   JAMBS: 9" MAX. FROM CORNERS AND 22 1/2" MAX. O.C.

TABLE KEY:

X O X

1+C3+1+C3+1	3

← ANCHOR QUANTITY PER JAMB

HEAD AND SILL ANCHOR QUANTITIES
A CLUSTER OF (3) ANCHORS CENTERED ON EACH MEETING RAIL PLUS (1) ANCHOR AT EACH OPERABLE VENT PLUS (1) ANCHORS AT FIXED SECTION. (9) ANCHORS TOTAL AT HEAD AND SILL.

(3" MIN. O.C. ANCHOR SPACING)

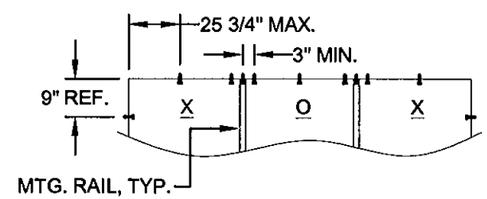

EXAMPLE CLUSTER W/ QTY. OF (3) ANCHORS
(SHOWN IN TABLE KEY ABOVE)

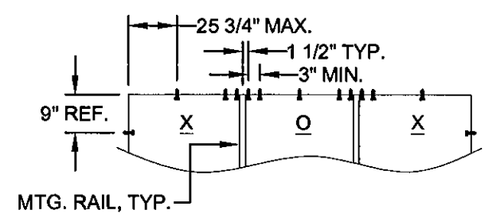

EXAMPLE CLUSTER W/ QTY. OF (4) ANCHORS

PRODUCT REVISED
as complying with the Florida Building Code
Acceptance No 11-0630.02
Expiration Date 12/21/2016
By Miami Dade Product Control

6/29/11
Robert L. Clark, P.E.
PE #39712
Structural

Revsd By:	Date:	Revisions:	
J.R.	6/20/11	D	ADDED IG CAP TO BE TEMPERED @ +30FT NOTE.
F.K.	4/15/07	C	UPDATE TABLE 5, SELECT VALUES DUE TO ANCHOR CAP. ADJ.
F.K.	10/17/06	B	REVISE ANCHORAGE FORMAT, HEAD & SILL CLUSTERS
Drawn By: F.K.	Date: 2/28/06	Checked By: J.J.	Date: 3/23/06

1070 TECHNOLOGY DRIVE
NOKOMIS, FL 34275
P.O. BOX 1529
NOKOMIS, FL 34274

PGT Vistbly Better

Description: ANCHORAGE SPACING, XOX (1/3-1/3-1/3)
Title: ALUM. HORIZONTAL ROLLER WINDOW, IMPACT

Series/Model:	Scale:	Sheet:	Drawing No.	Rev:
HR710	NTS	9 of 11	4127-10	D

ANCHOR QUANTITIES, XO & OX WINDOWS — TABLE 6

ANCHOR TYPE > & SUBSTRATE	GLASS TYPES A,B,G,H						GLASS TYPES C,D,E,F,I,J,K, L					
	2,3, WOOD		2, CONC		1, CONC		2,3, WOOD		2, CONC		1, CONC	
	ZONES		ZONES		ZONES		ZONES		ZONES		ZONES	
WINDOW SIZE W x H	HEAD & SILL	JAMBS	HEAD & SILL	JAMBS	HEAD & SILL	JAMBS	HEAD & SILL	JAMBS	HEAD & SILL	JAMBS	HEAD & SILL	JAMBS
37.000 x 38.375	1+C2+1	2	1+C2+1	2	1+C2+1	2	1+C2+1	2	1+C2+1	2	1+C2+1	2
48.000	1+C2+1	3	1+C2+1	3	1+C2+1	3	1+C2+1	3	1+C2+1	3	1+C2+1	3
50.625	1+C2+1	3	1+C2+1	3	1+C2+1	3	1+C2+1	3	1+C2+1	3	1+C2+1	3
54.000	1+C2+1	3	1+C2+1	3	1+C2+1	3	1+C2+1	3	1+C2+1	3	1+C2+1	3
60.000	1+C2+1	3	1+C2+1	3	1+C3+1	3	1+C2+1	3	1+C2+1	3	1+C3+1	3
63.000	1+C2+1	3	1+C2+1	3	1+C3+1	3	1+C2+1	3	1+C2+1	3	1+C3+1	3
48.000 x 38.375	1+C2+1	2	1+C2+1	2	1+C2+1	2	1+C2+1	2	1+C2+1	2	1+C2+1	2
48.000	1+C2+1	3	1+C2+1	3	1+C2+1	3	1+C2+1	3	1+C2+1	3	1+C2+1	3
50.625	1+C2+1	3	1+C2+1	3	1+C3+1	3	1+C2+1	3	1+C2+1	3	1+C3+1	3
54.000	1+C2+1	3	1+C2+1	3	1+C3+1	3	1+C2+1	3	1+C2+1	3	1+C3+1	3
60.000	1+C3+1	3	1+C2+1	3	1+C3+1	3	1+C3+1	3	1+C2+1	3	1+C3+1	3
63.000	1+C3+1	3	1+C2+1	3	1+C3+1	3	1+C3+1	3	1+C2+1	3	1+C3+1	3
53.125 x 38.375	1+C2+1	2	1+C2+1	2	1+C2+1	2	1+C2+1	2	1+C2+1	2	1+C2+1	2
48.000	1+C2+1	3	1+C2+1	3	1+C3+1	3	1+C2+1	3	1+C2+1	3	1+C3+1	3
50.625	1+C2+1	3	1+C2+1	3	1+C3+1	3	1+C2+1	3	1+C2+1	3	1+C3+1	3
54.000	1+C3+1	3	1+C2+1	3	1+C3+1	3	1+C3+1	3	1+C2+1	3	1+C3+1	3
60.000	1+C3+1	4	1+C2+1	3	1+C3+1	3	1+C3+1	4	1+C2+1	3	1+C3+1	3
63.000	1+C3+1	4	1+C3+1	3	1+C4+1	3	1+C3+1	4	1+C3+1	3	1+C4+1	3
60.000 x 38.375	1+C2+1	3	1+C2+1	2	2+C2+2	2	1+C2+1	3	1+C2+1	2	2+C2+2	2
48.000	1+C2+1	3	1+C2+1	3	2+C3+2	3	1+C2+1	3	1+C2+1	3	2+C3+2	3
50.625	1+C3+1	3	1+C2+1	3	2+C3+2	3	1+C3+1	3	1+C2+1	3	2+C3+2	3
54.000	1+C3+1	4	1+C2+1	3	2+C3+2	3	1+C3+1	4	1+C2+1	3	2+C3+2	3
60.000	1+C3+1	4	1+C3+1	3	2+C4+2	4	1+C3+1	4	1+C3+1	3	2+C4+2	4
63.000	1+C3+1	4	1+C3+1	3	2+C4+2	4	1+C3+1	4	1+C3+1	3	2+C4+2	4
66.000 x 38.375	2+C2+2	3	1+C2+1	2	2+C2+2	3	2+C2+2	3	1+C2+1	2	2+C2+2	3
48.000	2+C2+2	4	1+C2+1	3	2+C3+2	3	2+C2+2	4	1+C2+1	3	2+C3+2	3
50.625	2+C3+2	4	1+C2+1	3	2+C3+2	3	2+C3+2	4	1+C2+1	3	2+C3+2	3
54.000	2+C3+2	4	1+C2+1	3	2+C3+2	4	2+C3+2	4	1+C2+1	3	2+C3+2	4
60.000	2+C3+2	4	1+C3+1	3	2+C4+2	4	2+C3+2	4	1+C3+1	3	2+C4+2	4
63.000	1+C3+1	4	1+C3+1	3	2+C4+2	4	2+C3+2	4	1+C3+1	3	2+C4+2	4
74.000 x 38.375	2+C2+2	3	2+C2+2	2	2+C2+2	3	2+C2+2	3	2+C2+2	2	2+C2+2	3
48.000	2+C3+2	4	2+C2+2	3	2+C3+2	4	2+C3+2	4	2+C2+2	3	2+C3+2	4
50.625	2+C3+2	4	2+C2+2	3	2+C3+2	4	2+C3+2	4	2+C2+2	3	2+C3+2	4
54.000	2+C3+2	4	2+C3+2	3	2+C4+2	4	2+C3+2	4	2+C3+2	3	2+C4+2	4
60.000	2+C3+2	4	1+C3+1	3	2+C4+2	4	2+C3+2	5	2+C3+2	3	2+C4+2	4
63.000	2+C3+2	4	1+C3+1	3	2+C4+2	4	2+C4+2	5	2+C3+2	4	2+C4+2	5

NOTES:

1. ANCHOR TYPES:
   1 - 1/4" ELCO TAPCONS 2 - 1/4" ELCO SS4 CRETE-FLEX 3 - #12 STEEL SCREWS (G5)

2. GLASS TYPES:
   A. 5/16" LAMI - (1/8" A,.090, 1/8" A)
   B. 5/16" LAMI - (1/8" A,.090, 1/8" HS)
   C. 5/16" LAMI - (1/8" HS,.090, 1/8" HS)
   D. 7/16" LAMI - (3/16" A,.090, 3/16" A)
   E. 7/16" LAMI - (3/16" A,.090, 3/16" HS)
   F. 7/16" LAMI - (3/16" HS,.090, 3/16" HS)
   G. 13/16" LAMI IG - 1/8" OR 3/16" A (MIN.), 5/16" OR 3/8" SPACE, 5/16" LAMI - (1/8" A,.090, 1/8" A)
   H. 13/16" LAMI IG - 1/8" OR 3/16" A (MIN.), 5/16" OR 3/8" SPACE, 5/16" LAMI - (1/8" A,.090, 1/8" HS)
   I. 13/16" LAMI IG - 1/8" OR 3/16" A (MIN.), 5/16" OR 3/8" SPACE, 5/16" LAMI - (1/8" HS,.090, 1/8" HS)
   J. 13/16" LAMI IG - 1/8" OR 3/16" A (MIN.), 3/16" OR 1/4" SPACE, 7/16" LAMI - (3/16" A,.090, 3/16" A)
   K. 13/16" LAMI IG - 1/8" OR 3/16" A (MIN.), 3/16" OR 1/4" SPACE, 7/16" LAMI - (3/16" A,.090, 3/16" HS)
   L. 13/16" LAMI IG - 1/8" OR 3/16" A (MIN.), 3/16" OR 1/4" SPACE, 7/16" LAMI - (3/16" HS,.090, 3/16" HS)

D — FOR INSTALLATION IN THE HVHZ ABOVE 30 FT, GLASS TYPES G - L SHALL HAVE A TEMPERED I.G. GLASS CAP. BOTH THE DP AND ANCHOR QUANTITY REMAIN UNCHANGED.

3. WINDOW ANCHOR QUANTITIES ARE PER ADJACENT TABLE AND BASED ON THE FOLLOWING DIMENSIONS. FOR WINDOW SIZES NOT SHOWN, GO TO NEXT LARGER WINDOW IN TABLE.

   HEAD & SILL: 10 1/2" MAX. ON EACH SIDE OF MEETING RAIL CENTERLINE.
   18 3/4" MAX. FROM CORNERS.
   JAMBS: 9" MAX. FROM CORNERS AND 22 1/2" MAX. O.C.

TABLE KEY:

O	X
2+C3+2	3

← ANCHOR QUANTITY PER JAMB

HEAD AND SILL ANCHOR QUANTITIES
A CLUSTER OF (3) ANCHORS CENTERED ON THE MEETING RAIL PLUS (2) ANCHORS AT OPERABLE VENT AND FIXED SECTION. (7) ANCHORS TOTAL AT HEAD AND SILL.

(3" MIN. O.C. ANCHOR SPACING)

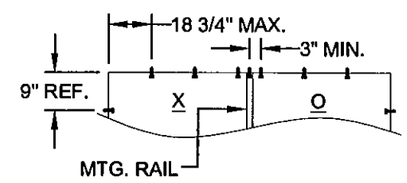

EXAMPLE CLUSTER W/ QTY. OF (3) ANCHORS
(SHOWN IN TABLE KEY ABOVE)

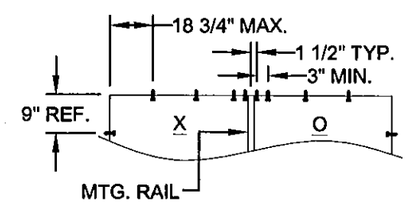

EXAMPLE CLUSTER W/ QTY. OF (4) ANCHORS

PRODUCT REVISED
as complying with the Florida Building Code
Acceptance No 11-0630.02
Expiration Date 12/21/2016
By
Miami Dade Product Control

6/29/11
Robert L. Clark, P.E.
PE #39712
Structural

Revsd By:	Date:	Revisions:	
J.R.	6/20/11	D	ADDED IG CAP TO BE TEMPERED @ +30FT NOTE.
F.K.	4/15/07	C	CHG.TABLE # TO 6, & SELECT VALUES DUE TO ANCHOR CAP. ADJ.
F.K.	10/17/06	B	REVISE ANCHORAGE FORMAT, HEAD & SILL CLUSTERS
Drawn By: F.K.	Date: 2/28/06	Checked By: J.J.	Date: 3/23/06

1070 TECHNOLOGY DRIVE
NOKOMIS, FL 34275

P.O. BOX 1529
NOKOMIS, FL 34274

PGT Visibly Better

Description: ANCHORAGE SPACING, OX AND XO WINDOWS
Title: ALUM. HORIZONTAL ROLLER WINDOW, IMPACT

Series/Model:	Scale:	Sheet:	Drawing No.	Rev:
HR710	NTS	10 of 11	4127-10	D

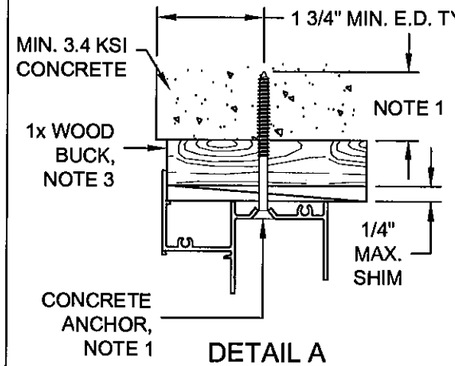

DETAIL A

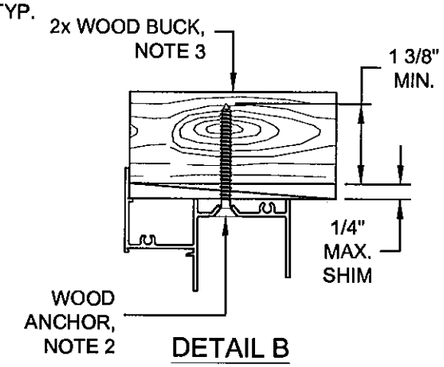

DETAIL B

TYPICAL FLANGE FRAME HEAD SECTIONS

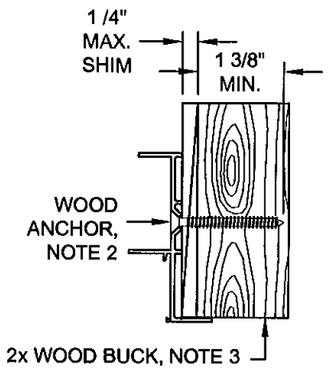

DETAIL E

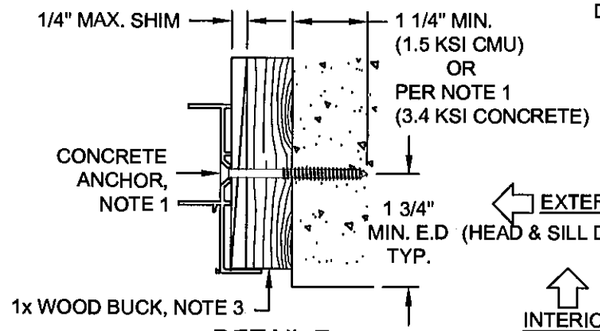

DETAIL F

TYPICAL FLANGE FRAME JAMB SECTIONS

EXTERIOR INTERIOR
(HEAD & SILL DETAILS A, B, C, D, G & H)

INTERIOR
(JAMB DETAILS E, F & I)
EXTERIOR

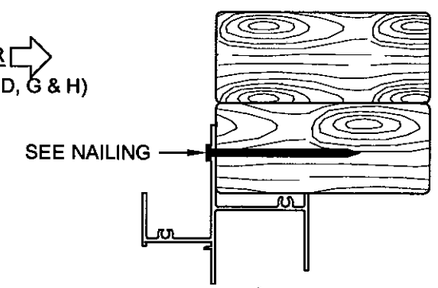

DETAIL H (HEAD)

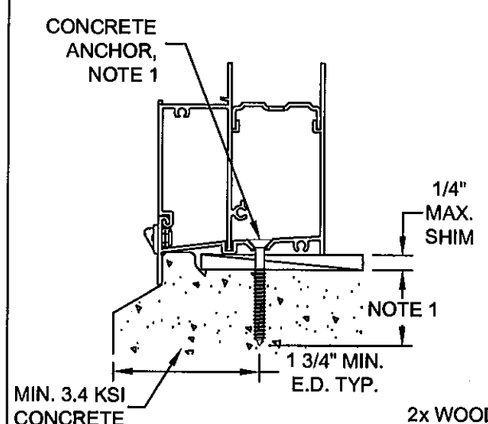

DETAIL C

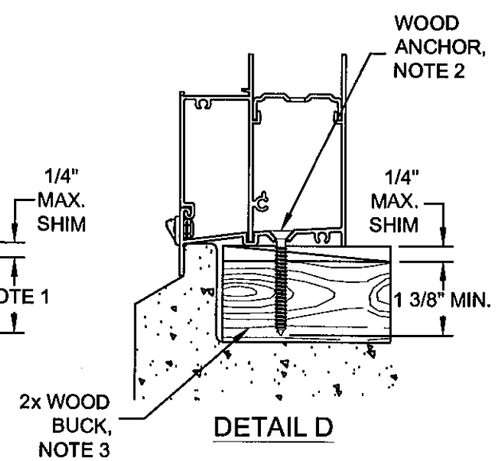

DETAIL D

TYPICAL FLANGE FRAME SILL SECTIONS

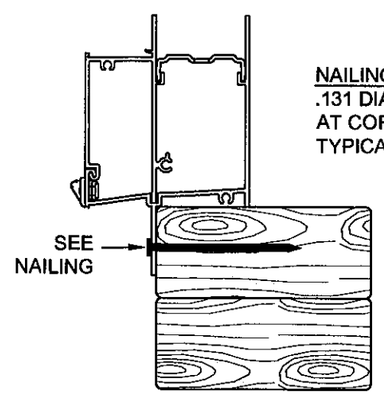

DETAIL G (SILL)

NAILING
.131 DIA. MIN. x 2 1/2" NAIL AT CORNERS AND 5" O.C. TYPICAL DETAILS G, H & I.

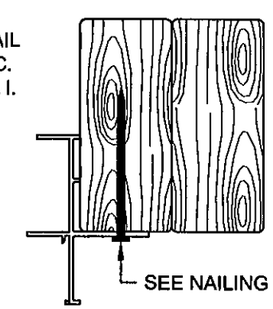

DETAIL I (JAMB)

TYPICAL INTEGRAL FIN FRAME SECTIONS

NOTES:

1. FOR CONCRETE APPLICATIONS IN MIAMI-DADE COUNTY, USE ONLY MIAMI-DADE COUNTY APPROVED 1/4" ELCO TAPCONS EMBEDED 1 3/8" MIN. OR 1/4" SS4 CRETE-FLEX EMBEDED 1 3/4" MIN.. MINIMUM DISTANCE FROM ANCHOR TO CONCRETE EDGE IS 1 3/4". FLATHEAD ANCHORS MUST BE #12 TRIMFIT HEAD.
2. FOR WOOD APPLICATIONS IN MIAMI-DADE COUNTY, USE #12 STEEL SCREWS (G5) OR 1/4" SS4 CRETE-FLEX WITH #12 TRIMFIT HEAD.
3. WOOD BUCKS DEPICTED IN THE SECTIONS ON THIS PAGE AS 1x ARE BUCKS WHOSE TOTAL THICKNESS IS LESS THAN 1 1/2". 1x WOOD BUCKS ARE OPTIONAL IF UNIT CAN BE INSTALLED DIRECTLY TO SOLID CONCRETE. WOOD BUCKS DEPICTED AS 2x ARE 1 1/2" THICK OR GREATER. INSTALLATION TO THE SUBSTRATE OF WOOD BUCKS TO BE ENGINEERED BY OTHERS OR AS APPROVED BY AUTHORITY HAVING JURISDICTION.
4. FOR ATTACHMENT TO ALUMINUM: THE MATERIAL SHALL BE A MINIMUM STRENGTH OF 6063-T5 AND A MINIMUM OF 1/8" THICK. THE ALUMINUM STRUCTURAL MEMBER SHALL BE OF A SIZE TO PROVIDE FULL SUPPORT TO THE WINDOW FRAME SIMILAR TO THAT SHOWN IN THESE DETAILS FOR 2x WOOD BUCKS. THE ANCHOR SHALL BE A #12 SHEET METAL SCREW WITH FULL ENGAGEMENT INTO THE ALUMINUM. IF THESE CRITERIA ARE MET, THE RESPECTIVE DESIGN PRESSURES AND ANCHORAGE SPACING FOR ANCHOR TYPE 2 MAY BE USED.
5. MATERIALS, INCLUDING BUT NOT LIMITED TO STEEL SCREWS, THAT COME INTO CONTACT WITH OTHER DISSIMILAR MATERIALS SHALL MEET THE REQUIREMENTS OF FLORIDA BUILDING CODE, CURRENT EDITION.

PRODUCT REVISED
as complying with the Florida Building Code
Acceptance No 11-0630.02
Expiration Date 12/21/2016
By
Miami Dade Product Control

Revsd By:	Date:	Revisions:	
J.R.	6/20/11	D	NO CHANGE THIS SHEET
F.K.	4/15/07	C	REVISE NOTES 1 & 2 REGARDING TRIMFIT HD. & EMBEDMENT. ADD I.F. FRAME. CHG. NOTE 5 TO FBC, "CURRENT EDITION"
F.K.	10/17/06	B	REVISE EDGE DIST. , EMBEDMENT & SHT. REFERENCES
Drawn By: F.K.	Date: 2/28/06	Checked By: J.J.	Date: 3/23/06

1070 TECHNOLOGY DRIVE
NOKOMIS, FL 34275

P.O. BOX 1529
NOKOMIS, FL 34274

PGT
Visibly Better

Description: ANCHORAGE DETAILS

Title: ALUM. HORIZONTAL ROLLER WINDOW, IMPACT

Series/Model:	Scale:	Sheet:	Drawing No.	Rev:
HR710	Half	11 of 11	4127-10	D

6/29/11
Robert L. Clark, P.E.
PE #39712
Structural