MIAMI-DADE COUNTY
DEPARTMENT OF PERMITTING, ENVIRONMENT, AND REGULATORY AFFAIRS (PERA)
BOARD AND CODE ADMINISTRATION DIVISION

MIAMI-DADE COUNTY
PRODUCT CONTROL SECTION
11805 SW 26 Street, Room 208
Miami, Florida 33175-2474
T (786) 315-2590 F (786) 315-2599
www.miamidade.gov/pera/

NOTICE OF ACCEPTANCE (NOA)

Mr. Glass Doors & Widows, Inc.
7440 N. W. 66th Street
Miami, FL 33166

SCOPE:

This NOA is being issued under the applicable rules and regulations governing the use of construction materials. The documentation submitted has been reviewed and accepted by Miami-Dade County PERA -Product Control Section to be used in Miami Dade County and other areas where allowed by the Authority Having Jurisdiction (AHJ).

This NOA shall not be valid after the expiration date stated below. The Miami-Dade County Product Control Section (In Miami Dade County) and/or the AHJ (in areas other than Miami Dade County) reserve the right to have this product or material tested for quality assurance purposes. If this product or material fails to perform in the accepted manner, the manufacturer will incur the expense of such testing and the AHJ may immediately revoke, modify, or suspend the use of such product or material within their jurisdiction. PERA reserves the right to revoke this acceptance, if it is determined by Miami-Dade County Product Control Section that this product or material fails to meet the requirements of the applicable building code.
This product is approved as described herein, and has been designed to comply with the Florida Building Code, including the High Velocity Hurricane Zone.

DESCRIPTION: Series "MG-275" Outswing Aluminum (NS) Doors w/wo Transom-L.M.I.

APPROVAL DOCUMENT: Drawing No. **W10-73**, titled "Narrow Stile Aluminum Outswing Door (NI)", sheets 1 through 10 of 10, prepared by AL-Farooq Corporation, dated 10/07/10 and last revised on FEB 15, 2012, signed and sealed by Javad Ahmad, P.E., bearing the Miami-Dade County Product Control Approval stamp with the Notice of Acceptance number and approval date by the Miami-Dade County Product Control Section.

MISSILE IMPACT RATING: None, approved Hurricane Protection Devices, complying w/ FBC required Limitation:

1. See applicable Design Pressure in sheet 2 &3 & hardware options in sheet 7.
2. When Door mulled with transom, lower design pressure of door or reinforced or non-reinforced horizontal mullion may control.
3. Units to be installed into concrete at head/sill. Jambs may be installed in conc. or masonry.

LABELING: Each unit shall bear a permanent label with the manufacturer's name or logo, city, state and series and following statement: "Miami-Dade County Product Control Approved", unless otherwise noted herein.

RENEWAL of this NOA shall be considered after a renewal application has been filed and there has been no change in the applicable building code negatively affecting the performance of this product.

TERMINATION of this NOA will occur after the expiration date or if there has been a revision or change in the materials, use, and/or manufacture of the product or process. Misuse of this NOA as an endorsement of any product, for sales, advertising or any other purposes shall automatically terminate this NOA. Failure to comply with any section of this NOA shall be cause for termination and removal of NOA.

ADVERTISEMENT: The NOA number preceded by the words Miami-Dade County, Florida, and followed by the expiration date may be displayed in advertising literature. If any portion of the NOA is displayed, then it shall be done in its entirety.

INSPECTION: A copy of this entire NOA shall be provided to the user by the manufacturer or its distributors and shall be available for inspection at the job site at the request of the Building Official.
This NOA consists of this page 1 and evidence pages E-1, as well as approval document mentioned above.
The submitted documentation was reviewed by **Ishaq I. Chanda, P.E.**

MIAMI-DADE COUNTY APPROVED

3/1/12

NOTICE OF ACCEPTANCE: EVIDENCE SUBMITTED

A. DRAWINGS

1. Manufacturer's die drawings and sections.
2. Drawing No. **W10-73**, titled "Narrow Stile Aluminum Outswing Door (NI)", sheets 1 through 10 of 10, prepared by AL-Farooq Corporation, dated 10/07/10 and last revised on FEB 15, 2012, signed and sealed by Javad Ahmad, P.E.

B. TESTS

1. Test reports on: 1) Air Infiltration Test, per FBC, TAS 202-94
   2) Uniform Static Air Pressure Test, Loading per FBC TAS 202-94
   3) Water Resistance Test, per FBC, TAS 202-94
   4) Forced Entry Test, per FBC 2411 3.2.1, TAS 202-94

   along with marked-up drawings and installation diagram of aluminum outswing double door, alum outswing door w/transom, doors w/transom & sidelite, prepared by Hurricane Engineering & Testing, Inc., Test Report No(s). **HETI-09-2547, HETI-09-2548, HETI-09-2549, HETI-09-2550** all dated 05/06/10, all signed and sealed by Candido F. Font, P. E. Note: Test report # **HETI-09-2547** has been revised and reissued along w/ marked-up Dwgs on Sep. 21, 2011, signed & sealed by Rafael E. Droz-Seda, P.E.

C. CALCULATIONS

1. Anchor verification calculations and structural analysis, complying with FBC-2010, prepared by Al Farooq Corporation, dated 04/04/11, 12/07/11 and last revised on 02/15/12, signed and sealed by Javad Ahmad, P.E
2. Glazing complies w/ ASTME-1300-02 & -04

D. QUALITY ASSURANCE

1. Miami Dade Department of Permitting, Environment, and Regulatory Affairs (PERA).

E. MATERIAL CERTIFICATIONS

1. Technical cut sheet of physical properties of Santoprene manufactured by UltraFeb.
2. Physical properties of Neoprene manufactured by Carolina Customer Rubber.

F. STATEMENTS

1. Statement letter of conformance and letter of no financial interest, prepared by Al Farooq Corporation, dated 02/13/12, signed and sealed by Javad Ahmad, P.E.
2. Lab compliance as part of the above test reports.

G. OTHER

1. Test proposal # **08-1382**, dated 09-22-08 approved by BCCO.

Ishaq I. Chanda

Ishaq I. Chanda, P.E.
Product Control Examiner
NOA No 11-0720.07
Expiration Date: March 08, 2017
Approval Date: March 08, 2012

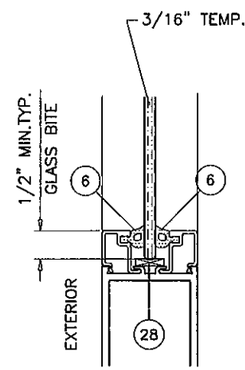

GLAZING DETAIL
DOOR

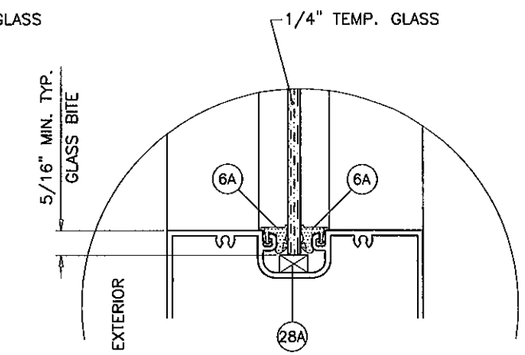

GLAZING DETAIL
TRANSOM

Approved as complying with the Florida Building Code
Date 3/1/2012
NOA# 11-0720.07
Miami Dade Product Control
By Ishaq I. Chanda

NARROW STILE
ALUMINUM OUTSWING ENTRANCE DOOR

DOORS NOT APPROVED FOR INSTALLATIONS WHERE WATER INFILTRATION RESISTANCE IS REQUIRED.

THIS PRODUCT HAS BEEN DESIGNED AND TESTED TO COMPLY WITH THE REQUIREMENTS OF THE FLORIDA BUILDING CODE INCLUDING HIGH VELOCITY HURRICANE ZONE (HVHZ).

1BY OR 2BY WOOD BUCKS BY OTHERS, MUST BE ANCHORED PROPERLY TO TRANSFER LOADS TO THE STRUCTURE.

ANCHORS SHALL BE AS LISTED, SPACED AS SHOWN ON DETAILS, ANCHORS EMBEDMENT TO BASE MATERIAL SHALL BE BEYOND WALL DRESSING OR STUCCO.

ANCHORING OR LOADING CONDITIONS NOT SHOWN IN THESE DETAILS ARE NOT PART OF THIS APPROVAL.

A LOAD DURATION INCREASE IS USED IN DESIGN OF ANCHORS INTO WOOD ONLY.

MATERIALS INCLUDING BUT NOT LIMITED TO STEEL/METAL SCREWS, THAT COME INTO CONTACT WITH OTHER DISSIMILAR MATERIALS SHALL MEET THE REQUIREMENTS OF THE FLORIDA BLDG. CODE SECTION 2003.8.4.

INSTRUCTIONS:

USE CHARTS AS FOLLOWS.

STEP 1 DETERMINE DESIGN WIND LOAD REQUIREMENT BASED ON WIND VELOCITY, BLDG. HEIGHT, WIND ZONE USING APPLICABLE ASCE 7 STANDARD.

STEP 2 FOR SINGLE (X) AND DOUBLE (XX) DOOR WITHOUT TRANSOMS SEE SHEET 2.
USE LOWER VALUES FROM HINGE AND LOCK TYPES USED.

STEP 3 FOR SINGLE (O/X) AND DOUBLE (O/XX) DOOR WITH TRANSOMS SEE HORIZONTAL MULLION CAPACITY CHART ON SHEET 3.
THE LOWEST VALUE FROM STEPS 2 AND 3 SHALL APPLY.

DOORS NOT RATED FOR IMPACT.
INSTALLATION OF THIS PRODUCT IN THE HVHZ AREA REQUIRES THE USE OF APPROVED SHUTTERS OR EXTERNAL PROTECTION DEVICES COMPLYING WITH HVHZ REQUIREMENTS.
INSTALLATION OF THIS SYSTEM OUTSIDE THE HVHZ AREA SHALL MEET THE APPLICABLE REQUIREMENTS FOR WIND BORNE DEBRIS PROTECTION.

Engr: JAVAD AHMAD
CIVIL
FLA. RE # 70032
C.A.N. 3538
FEB 15 2012

AL-FAROOQ CORPORATION
ENGINEERS & PRODUCT DEVELOPMENT
1235 S.W. 87 AVE
MIAMI, FLORIDA 33174
TEL. (305) 264-8100 FAX. (305) 262-6978
COMP-ANL\W10-73MRG

NARROW STILE ALUMINUM OUT-SWING DOOR (N.I.)

MR. GLASS DOORS & WINDOWS INC.
7440 N.W. 66 STREET
MIAMI, FL. 33166
TEL. (305) 470-8284 FAX. (305) 470-8285

revisions:

no	date	by	description
A	11.07.11		REV. PER BNC COMMENTS
B	01.23.12		REV. PER PERA COMMENTS

date: 10-07-10
scale: 3/8" = 1"
dr. by: HAMID
chk. by:

drawing no.
W10-73

sheet 1 of 10

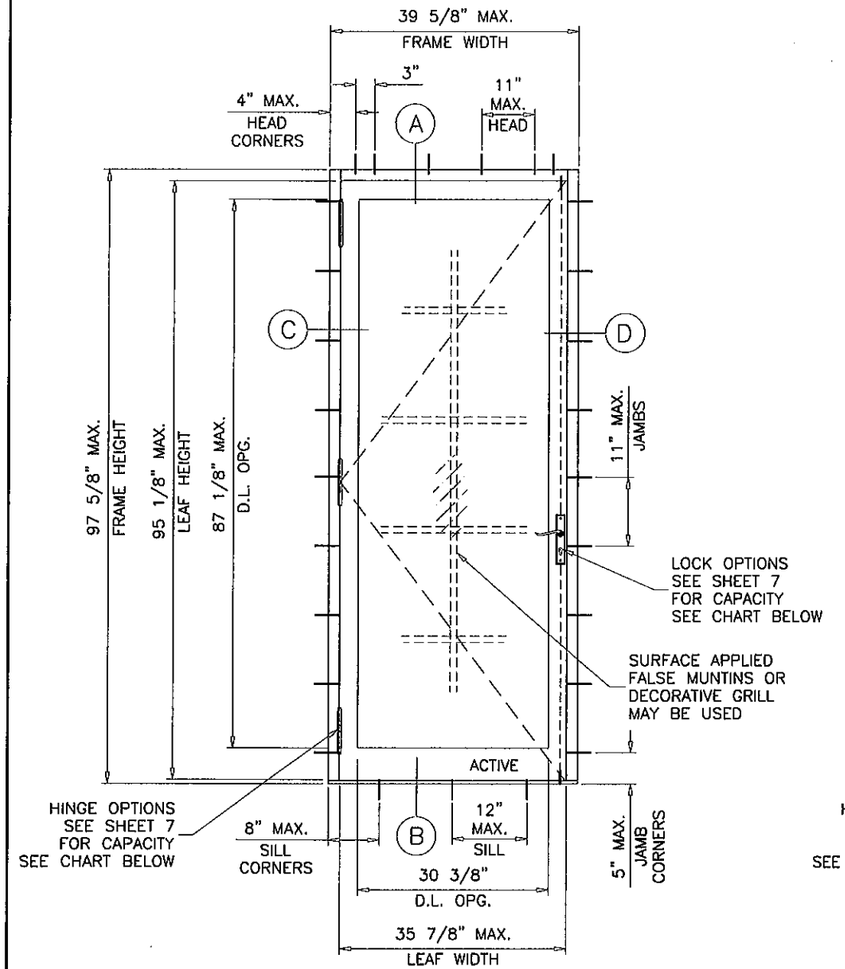

(X)

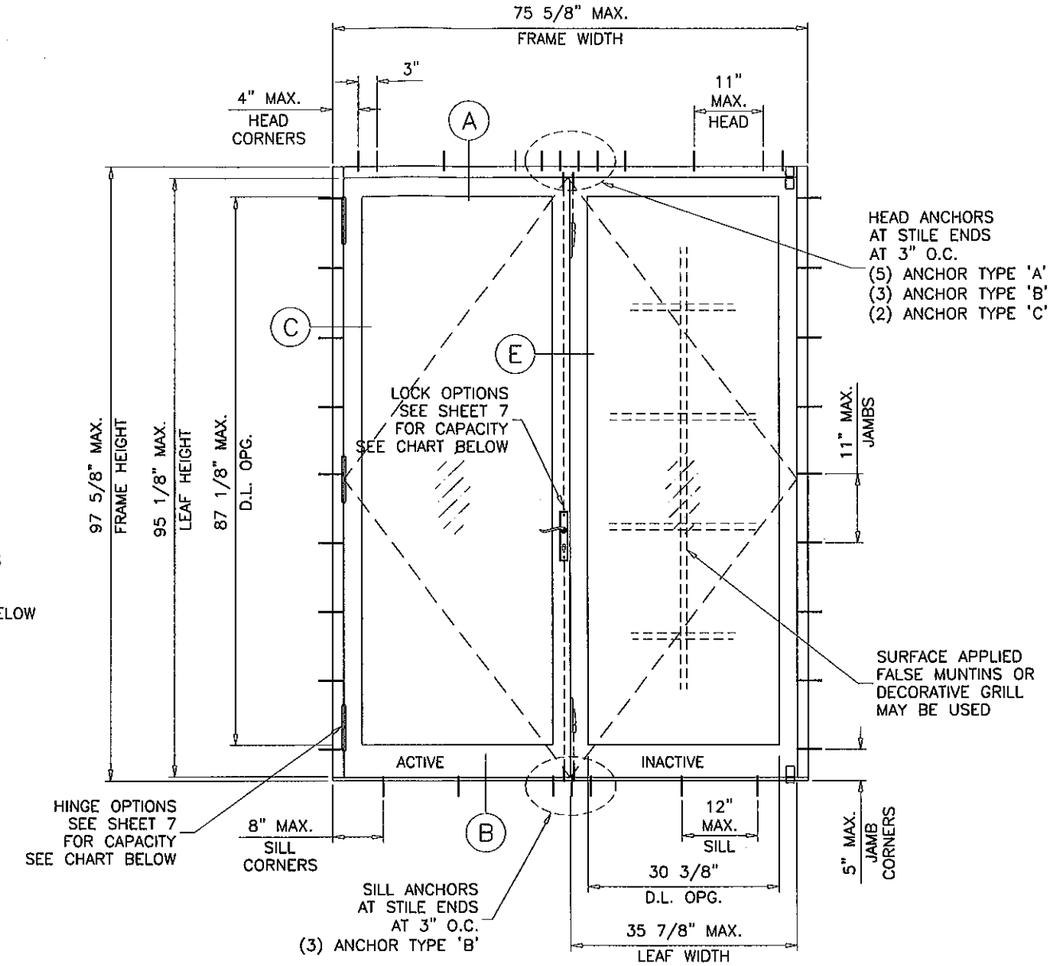

(XX)

Approved as complying with the Florida Building Code
Date 3/1/12
NOA# 11-0720.07
Miami Dade Product Control
By Ishaq I. Chauda

DOORS WITHOUT TRANSOM LOAD CAPACITY – PSF										
			HINGE TYPES				LOCKS			
DOOR DIMS.		FRAME HEIGHT	PIVOT		BUTT		PANIC OPTIONS 1&2		STANDARD OPTION 3	
SINGLE (X)	DOUBLE (XX)		EXT.(+)	INT.(–)	EXT.(+)	INT.(–)	EXT.(+)	INT.(–)	EXT.(+)	INT.(–)
39-5/8"	75-5/8"	85-3/4"	65.0	75.0	74.0	55.0	65.0	75.0	65.0	75.0
		97-5/8"	65.0	75.0	50.0	50.0	50.0	60.0	65.0	75.0

GLASS D.L.O. DIMS.

D.L.O. HEIGHT = DOOR FRAME HEIGHT – 10.50"
D.L.O. WIDTH (X DOORS) = FRAME WIDTH – 9.250"
D.L.O. WIDTH (XX DOORS) = (FRAME WIDTH – 14.875")/2

NOTE:
GLASS CAPACITIES ON THIS SHEET ARE BASED ON ASTM E1300-04 (3 SEC. GUSTS) AND FLORIDA BUILDING COMMISSION DECLARATORY STATEMENT DCA05-DEC-219

Engr: JAVAD AHMAD
CIVIL
FLA. PE # 70592
C.A.N. 3538
NO. 70592
STATE OF FLORIDA
FEB 15 2012

AL-FAROOQ CORPORATION
ENGINEERS & PRODUCT DEVELOPMENT
1235 S.W. 87 AVE
MIAMI, FLORIDA 33174
TEL. (305) 264-8100 FAX. (305) 262-6978
COMP-ANL\W10-73MRG

NARROW STILE ALUMINUM OUT-SWING DOOR (N.I.)

MR. GLASS DOORS & WINDOWS INC.
7440 N.W. 66 STREET
MIAMI, FL. 33166
TEL. (305) 470-8284 FAX. (305) 470-8285

revisions:

no	date	by	description
A	11.07.11		REV. PER BNC COMMENTS
B	01.23.12		REV. PER PERA COMMENTS

date: 10-07-10
scale: 1/2"=1'-0"
dr. by: HAMID
chk. by:

drawing no.
W10-73

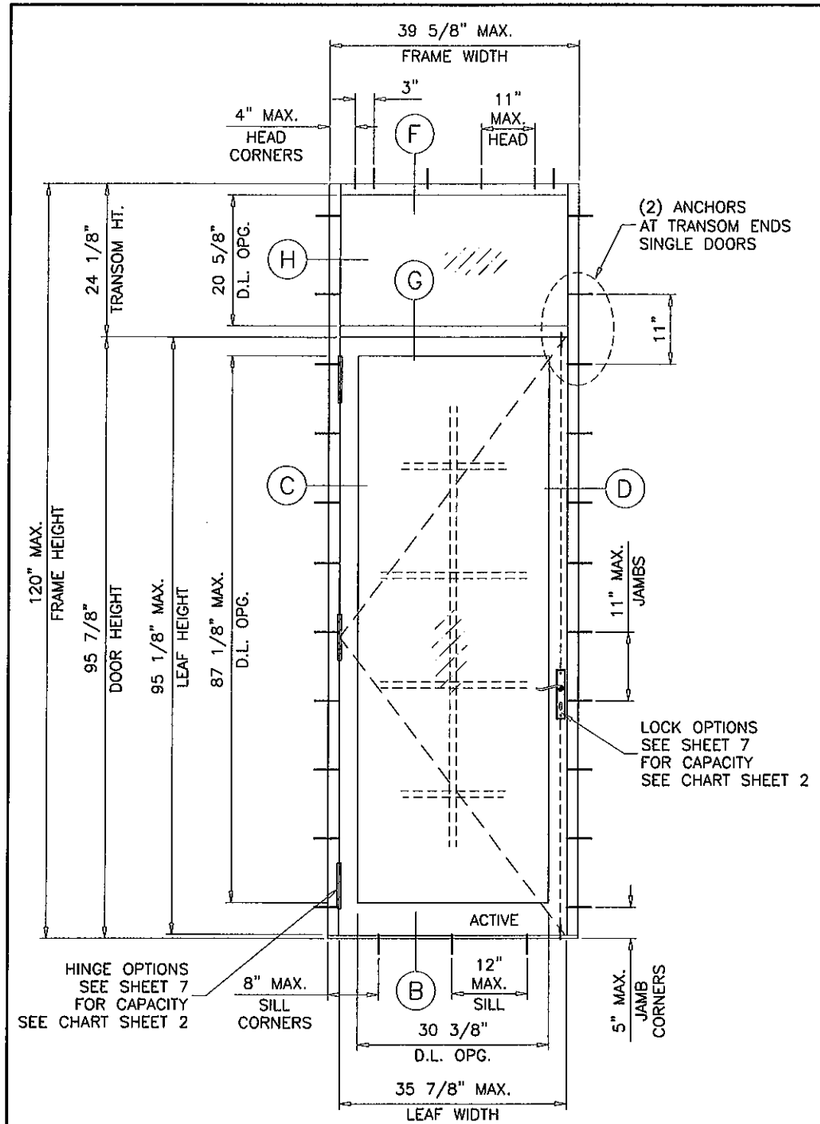

(O/X)

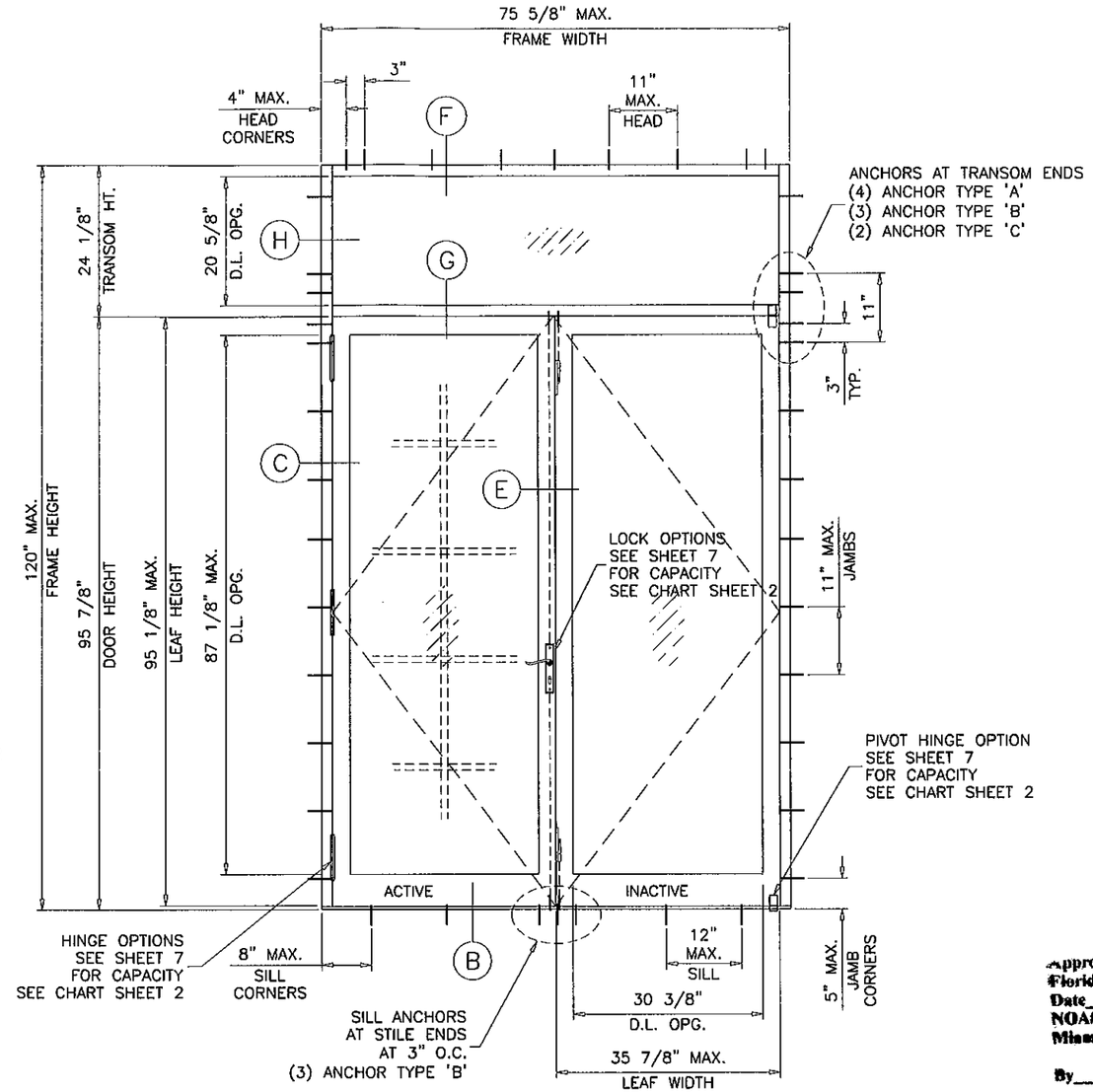

(O/XX)

Approved as complying with the Florida Building Code
Date 3/1/12
NOA# 11-0720.07
Miami Dade Product Control
By [signature]

HORIZONTAL MULLION LOAD CAPACITY – PSF						
DOOR DIMS.			WITHOUT REINFORCING		WITH REINFORCING	
FRAME WIDTH	DOOR HEIGHT	TRANSOM HEIGHT	EXT.(+)	INT.(–)	EXT.(+)	INT.(–)
75–5/8"	79–3/4"	36–1/4"	65.0	72.4	65.0	75.0
	83–3/4"	36–1/4"	65.0	68.0	65.0	75.0
	89–3/4"	30–1/4"	50.0	60.0	65.0	75.0
	95–3/4"	24–1/4"	50.0	60.0	50.0	60.0

GLASS D.L.O. DIMS.

D.L.O. HEIGHT = DOOR FRAME HEIGHT – 10.50"
D.L.O. WIDTH (X DOORS) = FRAME WIDTH – 9.250"
D.L.O. WIDTH (XX DOORS) = (FRAME WIDTH – 14.875")/2

Engr: JAVAD AHMAD
CIVIL
FLA. PE # 70592
C.A.N. 3538
FEB 15 2012

AL-FAROOQ CORPORATION
ENGINEERS & PRODUCT DEVELOPMENT
1235 S.W. 87 AVE
MIAMI, FLORIDA 33174
TEL. (305) 264-8100 FAX. (305) 262-6978

COMP-ANL\W10-73MRG

NARROW STILE ALUMINUM OUT-SWING DOOR (N.I.)

MR. GLASS DOORS & WINDOWS INC.
7440 N.W. 66 STREET
MIAMI, FL. 33166
TEL. (305) 470-8284 FAX. (305) 470-8285

revisions:

no	date	by	description
A	11.07.11		REV. PER BNC COMMENTS
B	01.23.12		REV. PER PERA COMMENTS

date: 10-07-10
scale: 1/2"=1'-0"
dr. by: HAMID
chk. by:

drawing no.
W10-73

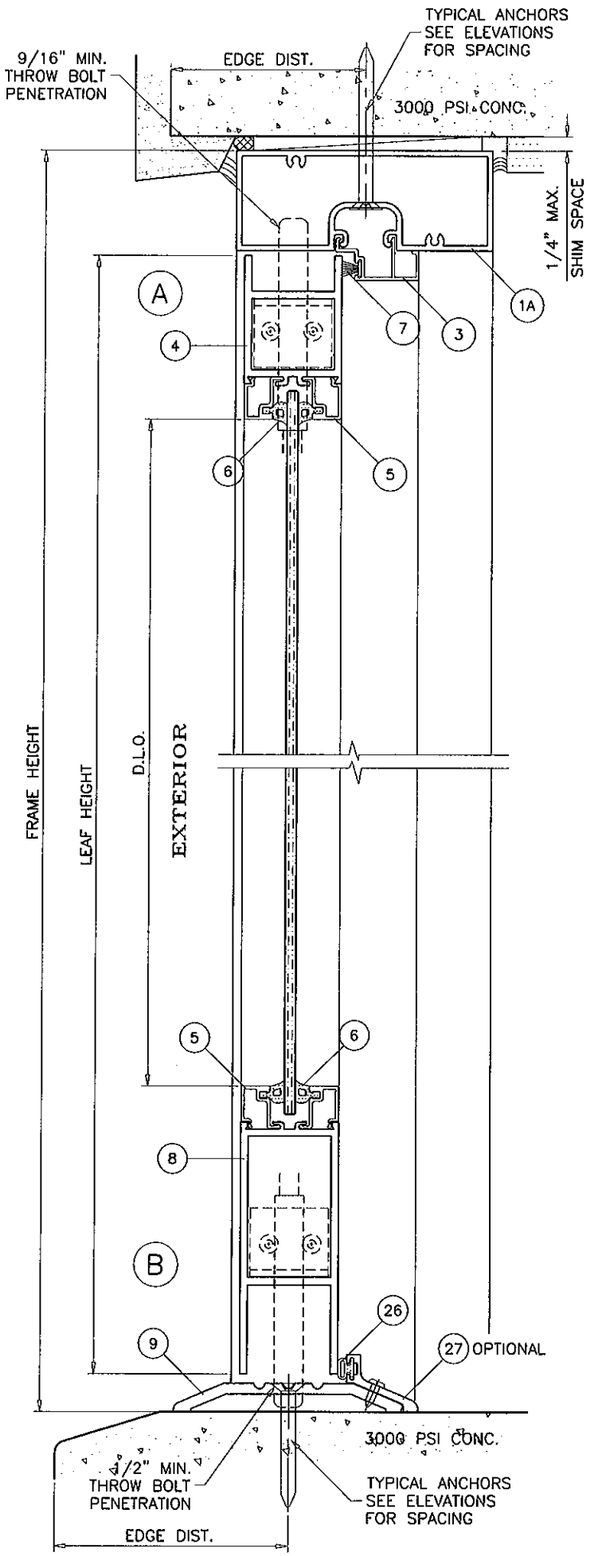

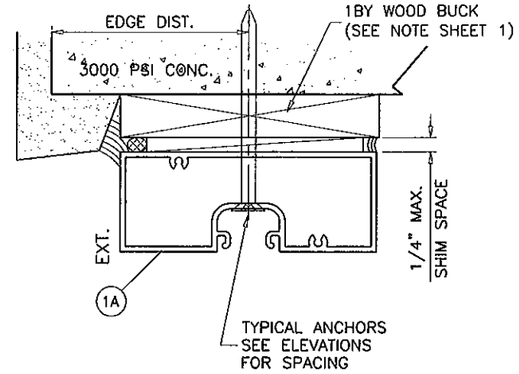

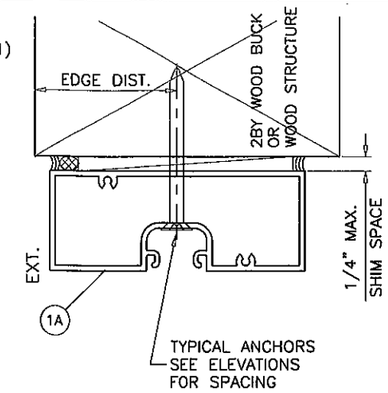

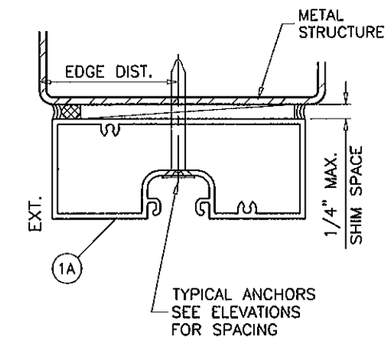

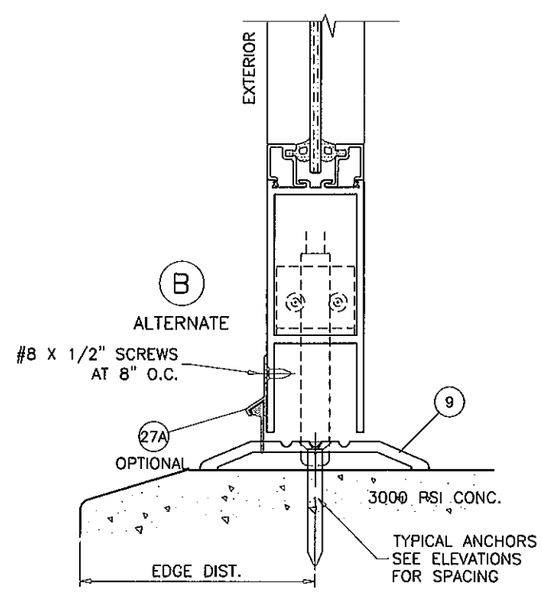

WOOD BUCKS AND METAL STRUCTURE NOT BY MR. GLASS MUST SUSTAIN LOADS IMPOSED BY GLAZING SYSTEM AND TRANSFER THEM TO THE BUILDING STRUCTURE.

TYPICAL ANCHORS: SEE ELEV. FOR SPACING

TYPE 'A'– 1/4" DIA. TAPCON BY 'ITW' OR (Fu=120 KSI, Fy=92 KSI)
1/4" DIA. ULTRACON BY 'ELCO' (Fu=177 KSI, Fy=155 KSI)
INTO 2BY WOOD BUCKS OR WOOD STRUCTURES
1–3/8" MIN. PENETRATION INTO WOOD
THRU 1BY BUCKS INTO CONC. OR MASONRY
1–1/4" MIN. EMBED INTO CONC. OR MASONRY

TYPE 'B'– 1/4" DIA. TAPCON BY 'ITW' OR (Fu=120 KSI, Fy=92 KSI)
1/4" DIA. ULTRACON BY 'ELCO' (Fu=177 KSI, Fy=155 KSI)
DIRECTLY INTO CONC. OR MASONRY
1–1/4" MIN. EMBED INTO CONC. OR MASONRY

TYPE 'C'– #14 SMS OR SELF DRILLING SCREWS (GRADE 2 CRS)
INTO MIAMI–DADE COUNTY APPROVED MULLIONS (MIN. THK. = 1/8")
INTO METAL STRUCTURES
STEEL : 1/8" THK. MIN. (Fy = 36 KSI MIN.)
ALUMINUM : 1/8" THK. MIN. (6063–T5 MIN.)
(STEEL IN CONTACT WITH ALUMINUM TO BE PLATED OR PAINTED)

TYPICAL EDGE DISTANCE
INTO CONCRETE AND MASONRY = 2–1/2" MIN.
INTO WOOD STRUCTURE = 1" MIN.
INTO METAL STRUCTURE = 3/4" MIN.

CONCRETE AT HEAD, SILL OR JAMBS f'c = 3000 PSI MIN.
C–90 HOLLOW/FILLED BLOCK AT JAMBS f'm = 2000 PSI MIN.

Approved as complying with the Florida Building Code
Date 3/1/12
NOA# 11-0720-07
Miami Dade Product Control
By Ishay Chayat

Engr: JAVADI AHMAD
CIVIL
FLA. PE # 70592
C.A.N. 3538
FEB 15 2012

AL-FAROOQ CORPORATION
ENGINEERS & PRODUCT DEVELOPMENT
1235 S.W. 87 AVE
MIAMI, FLORIDA 33174
TEL. (305) 264-8100 FAX. (305) 262-6978

COMP-ANL\W10-73MRG

NARROW STILE ALUMINUM OUT-SWING DOOR (N.I.)

MR. GLASS DOORS & WINDOWS INC.
7440 N.W. 66 STREET
MIAMI, FL. 33166
TEL. (305) 470-8284 FAX. (305) 470-8285

revisions:

no	date	by	description
A	11.07.11		REV. PER BNC COMMENTS
B	01.23.12		REV. PER PERA COMMENTS

date: 10-07-10
scale: 3/8" = 1"
dr. by: HAMID
chk. by:

drawing no. W10-73

sheet 4 of 10

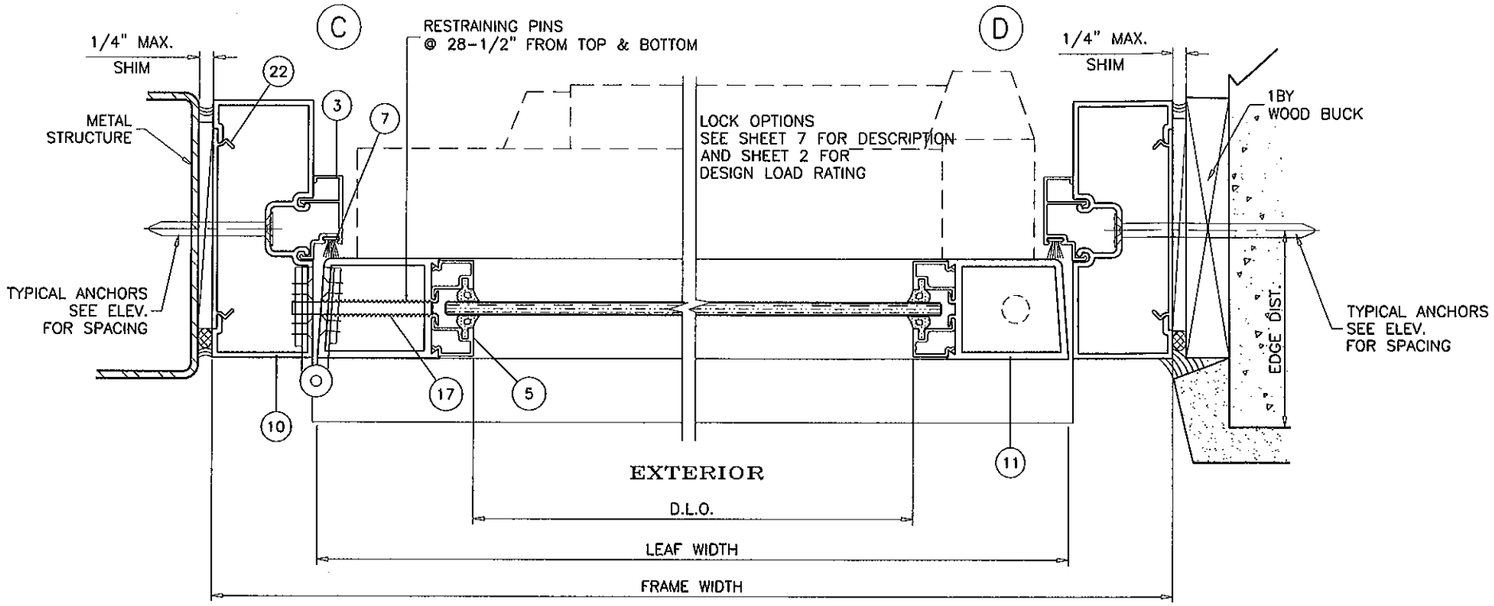

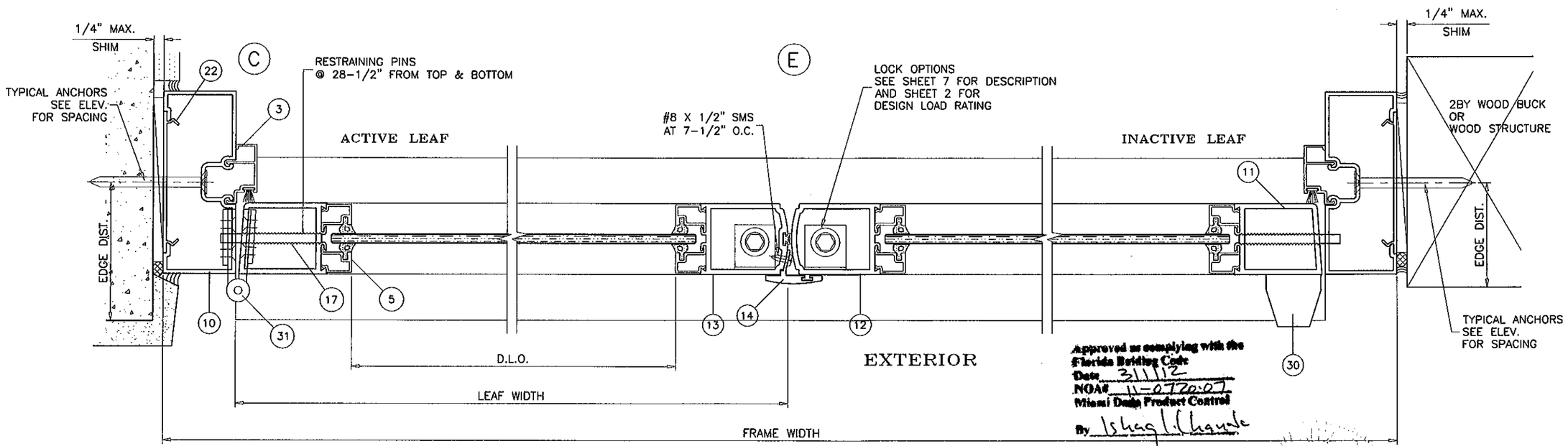

Approved as complying with the Florida Building Code
Date 3/1/12
NOA# 11-0720.07
Miami Dade Product Control
By Ishaq Chande

Engr: JAVAD AHMAD
CIVIL
FLA. PE # 70592
C.A.N. 3538

FEB 15 2012

DOOR DETAILS

AL-FAROOQ CORPORATION
ENGINEERS & PRODUCT DEVELOPMENT
1235 S.W. 87 AVE
MIAMI, FLORIDA 33174
TEL. (305) 264-8100 FAX. (305) 262-6978
COMP-ANL\W10-73MRG

NARROW STILE ALUMINUM OUT-SWING DOOR (N.I.)

MR. GLASS DOORS & WINDOWS INC.
7440 N.W. 66 STREET
MIAMI, FL. 33166
TEL. (305) 470-8284 FAX. (305) 470-8285

revisions:

no	date	by	description
A	11.07.11		REV. PER BNC COMMENTS
B	01.23.12		REV. PER PERA COMMENTS

date: 10-07-10
scale: 3/8" = 1"
dr. by: HAMID
chk. by:

drawing no.
W10-73

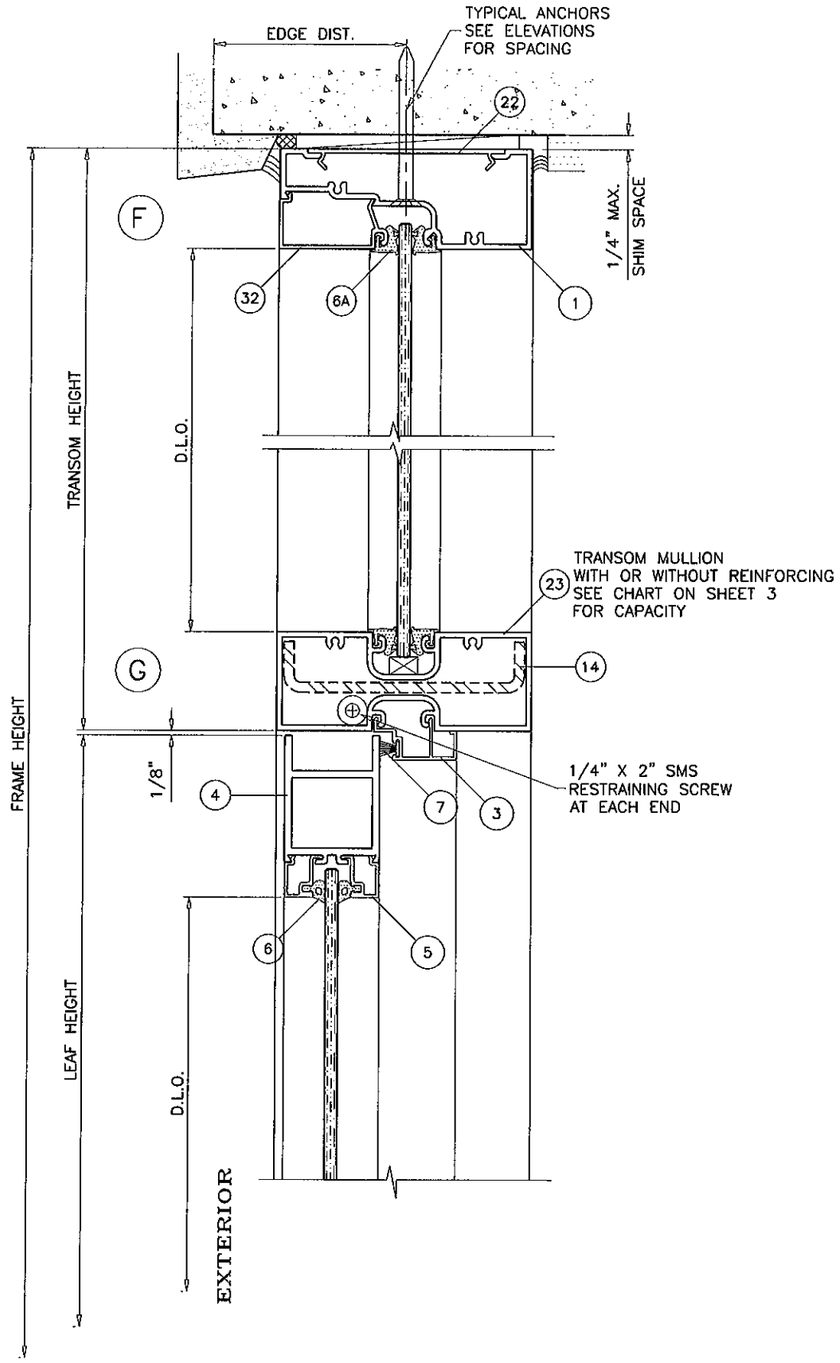

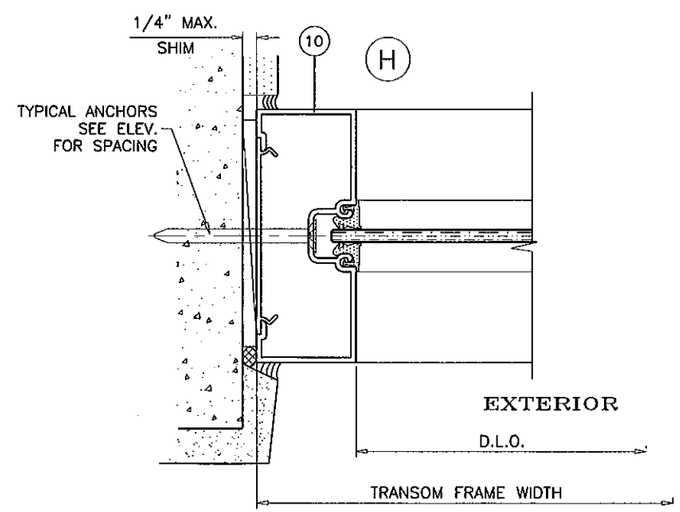

Approved as complying with the
Florida Building Code
Date 3/1/12
NOA# 11-0720.07
Miami Dade Product Control
By Ishaq I. Chaudhary

Engr: JAVAD AHMAD
CIVIL
FLA. PE # 70592
C.A.N. 3538
FEB 15 2012

TRANSOM DETAILS

AL-FAROOQ CORPORATION
ENGINEERS & PRODUCT DEVELOPMENT
1235 S.W. 87 AVE
MIAMI, FLORIDA 33174
TEL. (305) 264-8100 FAX. (305) 262-6978

COMP-ANL\W10-73MRG

NARROW STILE ALUMINUM OUT-SWING DOOR (N.I.)

MR. GLASS DOORS & WINDOWS INC.
7440 N.W. 66 STREET
MIAMI, FL. 33166
TEL. (305) 470-8284 FAX. (305) 470-8285

revisions:

no	date	by	description
A	11.07.11		REV. PER BNC COMMENTS
B	01.23.12		REV. PER PERA COMMENTS

date: 10-07-10
scale: 3/8" = 1"
dr. by: HAMID
chk. by:

drawing no.
W10-73

sheet 6 of 10

LOCKS:

PANIC OPTION #1:

CONCEALED VERTICAL ROD PANIC EXIT DEVICE BY
'JACKSON PANIC SYSTEM' #1085 LOCATED AT 38"
FROM SILL AT EACH LEAF.
FASTENED WITH
(1) #10 X 3/8" FH SELF DRILLING SCREW AT ONE END AND
(2) #10 X 1/2" FH SELF DRILLING SCREWS AT OTHER END

PANIC OPTION #2:

CONCEALED VERTICAL ROD PANIC EXIT DEVICE BY
'REGENT HARDWARE' #5770 LOCATED AT 40"
FROM SILL AT EACH LEAF.
FASTENED WITH
(1) #10 X 3/8" FH SELF DRILLING SCREW AT ONE END AND
(2) #10 X 1/2" FH SELF DRILLING SCREWS AT OTHER END

STANDARD OPTION #3:

ACTIVE LEAF:

THREE POINT LOCK SYSTEM SERIES 2222 BY 'REGENT HARDWARE'
KEY OPERATED FROM EXTERIOR AND THUMB TURN ON INTERIOR
WITH CONCEALED FLUSH BOLTS AT TOP & BOTTOM OF LOCK STILE
LOCATED AT 34" FROM BOTTOM OF LEAF

INACTIVE LEAF:

CONCEALED FLUSH BOLTS SERIES 2508 BY 'REGENT HARDWARE.'
MANUALLY OPERATED LEVERS MOUNTED ON
INSIDE FACE OF LEAF STILE LOCATED AT
10-3/4" FROM TOP AND BOTTOM
LOCK FASTENED TO STILE WITH (2) #10 X 3/8" FH SELF DRILLING
SCREWS

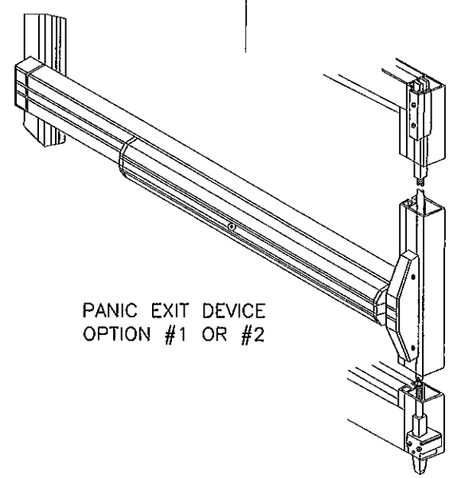

PANIC EXIT DEVICE
OPTION #1 OR #2

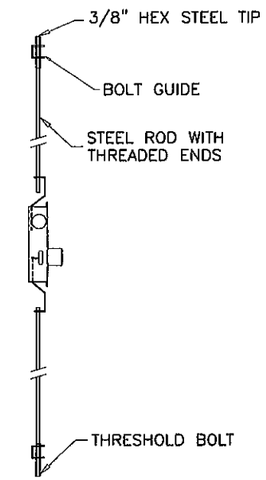

HINGES:

OPTION #1:

OFFSET PIVOT HINGES SERIES 4339 BY 'REGENT HARDWARE'
AT TOP AND BOTTOM
FASTENED TO FRAME AND THRESHOLD WITH
#12 X 3/4" FH THREAD CUTTING SCREWS,
(2) AT THRESHOLD, (2) AT JAMB BOTTOM
(3) AT FRAME HEAD

OPTION #2:

4" X 4-1/2" X .130" THK. ST. STEEL KNUCKLE HINGE
SERIES 4001 BY 'REGENT HARDWARE' 3 PER LEAF
TOP/BOTTOM HINGES AT 11" FROM EACH END
CENTER HINGE AT MIDSPAN
HINGES FASTENED WITH #12 X 1/2" FH SCREWS

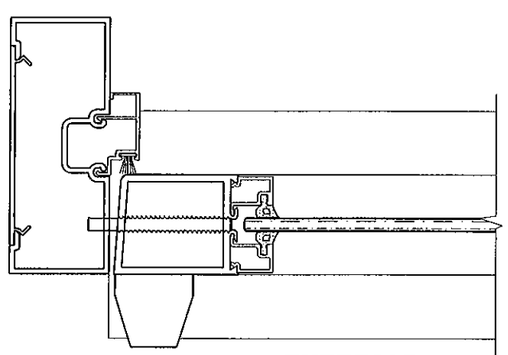

EXTERIOR

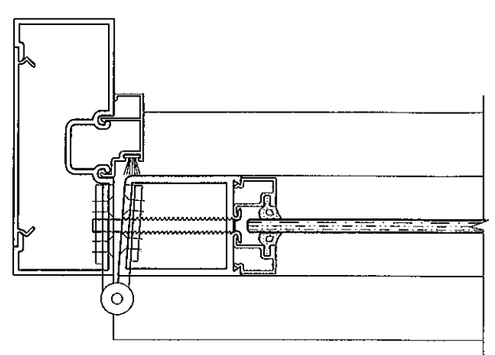

EXTERIOR

Approved as complying with the
Florida Building Code
Date 3/1/12
NOA# 11-0720.07
Miami-Dade Product Control
By Ishaq I. Chaudhry

Engr: JAVAD AHMAD
CIVIL
FLA. PE # 70592
C.A.N. 3538
STATE OF FLORIDA
FEB 15 2012

AL-FAROOQ CORPORATION
ENGINEERS & PRODUCT DEVELOPMENT
1235 S.W. 87 AVE
MIAMI, FLORIDA 33174
TEL. (305) 264-8100 FAX. (305) 262-6978
COMP-ANL\W10-73MRG

NARROW STILE ALUMINUM OUT-SWING DOOR (N.I.)

MR. GLASS DOORS & WINDOWS INC.
7440 N.W. 66 STREET
MIAMI, FL. 33166
TEL. (305) 470-8284 FAX. (305) 470-8285

revisions:

no	date	by	description
A	11.07.11		NO CHANGE THIS SHEET
B	01.23.12		REV. PER PERA COMMENTS

date: 10-07-10
scale: 3/8" = 1"
dr. by: HAMID
chk. by:

drawing no.
W10-73

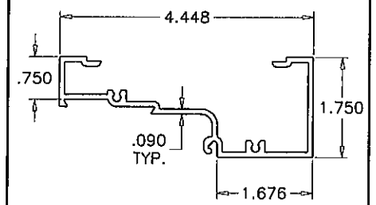

(1) TRANSOM HEAD
MG-453

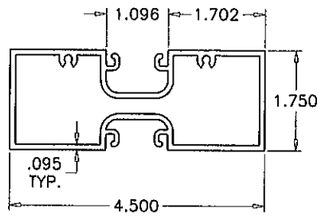

(23) TRANSOM MULLION
MG-456

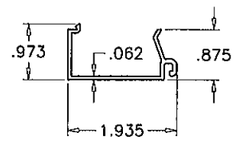

(32) GLASS STOP
MG-454

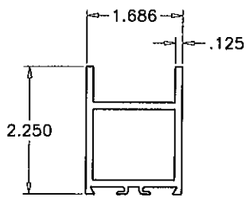

(4) TOP RAIL
MG-00

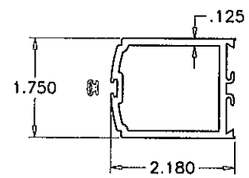

(13) ACTIVE LOCK STILE
MG-06

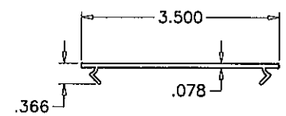

(22) ANCHOR PLATE
MG-459

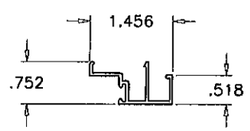

(3) DOOR STOP
MG-4511

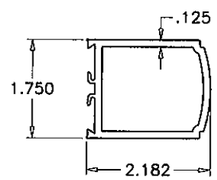

(14) INACTIVE STILE
MG-07

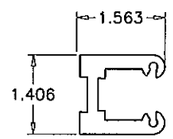

(25) SHEAR BLOCK
MG-38

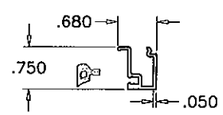

(5) GLASS STOP
MG-32

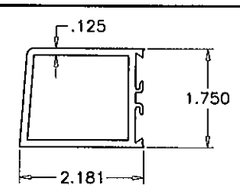

(11) HINGE/PIVOT STILE
MG-05

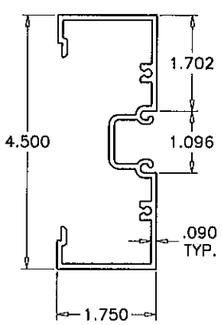

(10) FRAME JAMB
MG-451

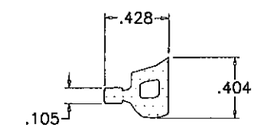

HARDNESS = 67 SHORE A
TENSILE STRENGTH (100% STRAIN)= 430 PSI
TENSILE STRENGTH (BREAK)= 1060 PSI
ELONGATION AT BREAK = 450%
TEAR STRENGTH = 140 LBF/IN
SPECIFIC GRAVITY = 0.97

(6) GLAZING GASKET
SCALE 1:1

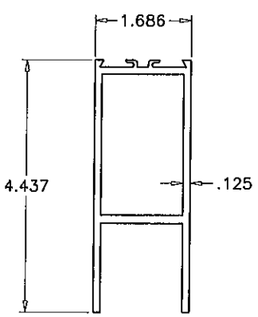

(8) BOTTOM RAIL
MG-04

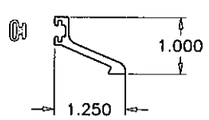

(27) THRESHOLD RISER
AGP-292

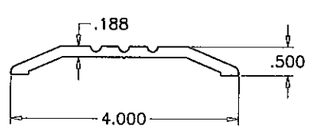

(9) THRESHOLD
MG-40

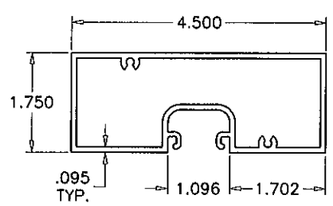

(1A) FRAME HEAD
MG-457

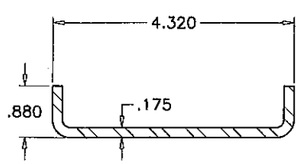

(14) STEEL REINFORCING

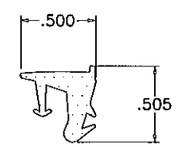

HARDNESS = 71 SHORE A
TENSILE STRENGTH (BREAK)= 1429 PSI
ELONGATION AT BREAK = 295%
TEAR STRENGTH = 221 LBF/IN
SPECIFIC GRAVITY = 1.21

(6A) GLAZING GASKET
SCALE 1:1

Approved as complying with the Florida Building Code
Date 3/1/12
NOA# 11-0722.07
Miami Dade Product Control
By Ishaq I. Chand

Engr: JAVAD AHMAD
CIVIL
FLA. PE # 70592
C.A.N. 3538

FEB 15 2012

AL-FAROOQ CORPORATION
ENGINEERS & PRODUCT DEVELOPMENT
1235 S.W. 87 AVE
MIAMI, FLORIDA 33174
TEL. (305) 264-8100 FAX. (305) 262-6978

COMP-ANL\W10-73MRG

NARROW STILE ALUMINUM OUT-SWING DOOR (N.I.)

MR. GLASS DOORS & WINDOWS INC.
7440 N.W. 66 STREET
MIAMI, FL. 33166
TEL. (305) 470-8284 FAX. (305) 470-8285

revisions:

no	date	by	description
A	11.07.11		REV. PER BNC COMMENTS
B	01.23.12		REV. PER PERA COMMENTS

date: 10-07-10
scale: 3/8" = 1"
dr. by: HAMID
chk. by:

drawing no.
W10-73

sheet 8 of 10

ITEM NO.	PART #	QUANTITY	DESCRIPTION	MATERIAL	MANF./SUPLIER/REMARKS
1	MG-453	1	TRANSOM HEAD	6063-T6	-
1A	MG-457	-	FRAME HEAD	6063-T6	-
2	5506	1	HORIZONTAL	6063-T6	-
3	MG-4511	AS REQD.	DOOR STOP	6063-T6	-
4	MG-00	1/ LEAF	TOP RAIL	6063-T6	-
5	MG-32	AS REQD.	GLASS STOP	6063-T6	-
6	WV3294	AS REQD.	GLAZING GASKET	SANTOPRENE	ULTRAFAB
6A	2028	AS REQD.	GLAZING GASKET	NEOPRENE	CAROLINA CUSTOM RUBBER
7	W31325MG	AS REQD.	ULTRAFIN PILE W'STRIPPING	WOOL	ULTRAFAB
8	MG-04	1/ LEAF	BOTTOM RAIL	6063-T6	-
9	MG-40	1	THRESHOLD	6063-T6	-
10	MG-451	2	OPEN BACK JAMB	6063-T6	-
11	MG-05	AS REQD.	HINGE OR PIVOT STILE	-	-
12	20240	1/ LEAF	FIX STILE (INACTIVE PANEL)	6063-T6	-
13	MG-06	1/ LEAF	LOCK STILE (ACTIVE PANEL)	6063-T6	-
14	-	1	REINFORCING CHANNEL	STEEL	ASTM A36, Fy 36 KSI
15	10741	-	PUSH BAR (OPTIONAL)	6063-T6	-
16	AGP-123	AS REQD.	HANDLE	6063-T6	-
17	14234	2/ LEAF	RESTRAINING PINS (2-1/2" X 1/4")	STEEL	-
18	30708	1/ LEAF	TOP FRAME OFFSET PIVOT	-	-
19	30709	1/ LEAF	TOP DOOR OFFSET PIVOT	-	-
20	30710	1/ LEAF	BOTTOM DOOR OFFSET PIVOT	-	-
21	30711	1/ LEAF	THRESHOLD OFFSET PIVOT	-	-
22	MG-459	AS REQD.	ANCHOR PLATE, 3" LONG AT ANCHORS	6063-T6	-
23	MG-456	1	TRANSOM MULLION	6063-T6	-
25	MG-38	-	SHEAR BLOCK	6063-T6	-
26	WV3294	AS REQD.	BULB W'STRIPPING	VINYL	DUROMETER 70±5
27	AGP-292	AS REQD.	OPTIONAL THRESHOLD RISER	6063-T6	-
27A	-	AS REQD.	OPTIONAL DOOR BOTTOM SWEEP	ALUM/VINYL	-
28	-	2/LITE	SETTING BLOCK, 1/8" X 1/2" X 1/2" LONG, AT 5" FROM EACH END	NEOPRENE	C.R. LAURENCE, DUROMETER 80±5
28A	-	2/LITE	SETTING BLOCK, 1/2" X 3/8" X 2" LONG, AT 9" FROM EACH END	NEOPRENE	C.R. LAURENCE, DUROMETER 80±5
29	#10 X 1-1/2"	2/ CORNER	ASSEMBLY SCREWS (PH SELF DRILLING)	-	GRADE 4 CRS, Fu=92 KSI, Fy=120 KSI
30	4339	2/ LEAF	PIVOT HINGES	-	REGENT HARDWARE
31	4001	3/ LEAF	BUTT HINGES	ST. STEEL	REGENT HARDWARE
32	MG-454	-	GLAZING STOP	6063-T6	-

Approved as complying with the Florida Building Code
Date 3/1/12
NOA# 11-0720.07
Miami Dade Product Control
By [signature]

SEALANTS:

ALL FRAME CORNERS, JOINTS, MULLION SEAMS AND PERIMETER OF GLAZING BEAD TO FRAME TO BE SEALED WITH DOW CORNING 795 SEALANT.

Engr: JAVAD AHMAD
CIVIL
FLA. PE # 70592
C.A.N. 3538
FEB 15 2012

AL-FAROOQ CORPORATION
ENGINEERS & PRODUCT DEVELOPMENT
1235 S.W. 87 AVE
MIAMI, FLORIDA 33174
TEL. (305) 264-8100 FAX. (305) 262-6978

COMP-ANL\W10-73MRG

NARROW STILE ALUMINUM OUT-SWING DOOR (N.I.)

MR. GLASS DOORS & WINDOWS INC.
7440 N.W. 66 STREET
MIAMI, FL. 33166
TEL. (305) 470-8284 FAX. (305) 470-8285

revisions:

no	date	by	description
A	11.07.11		REV. PER BNC COMMENTS
B	01.23.12		REV. PER PERA COMMENTS

date: 10-07-10
scale: 3/8" = 1"
dr. by: HAMID
chk. by:

drawing no. W10-73

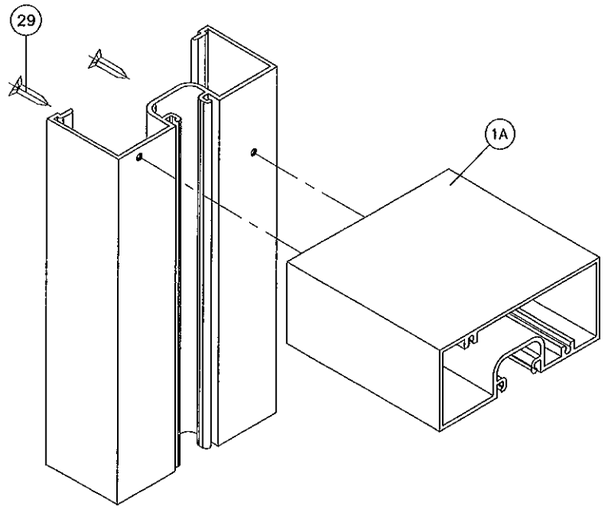

FRAME UPPER CORNER

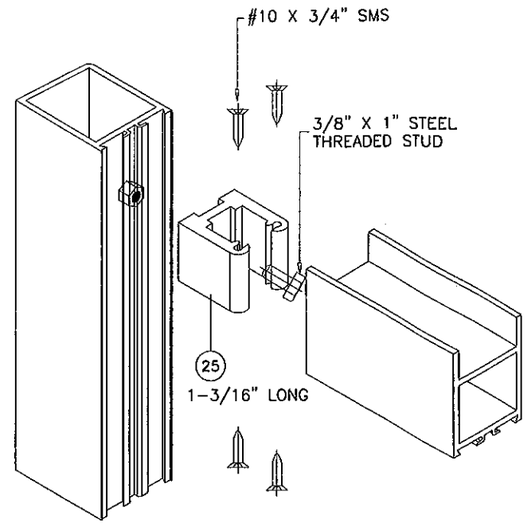

DOOR LEAF UPPER CORNER

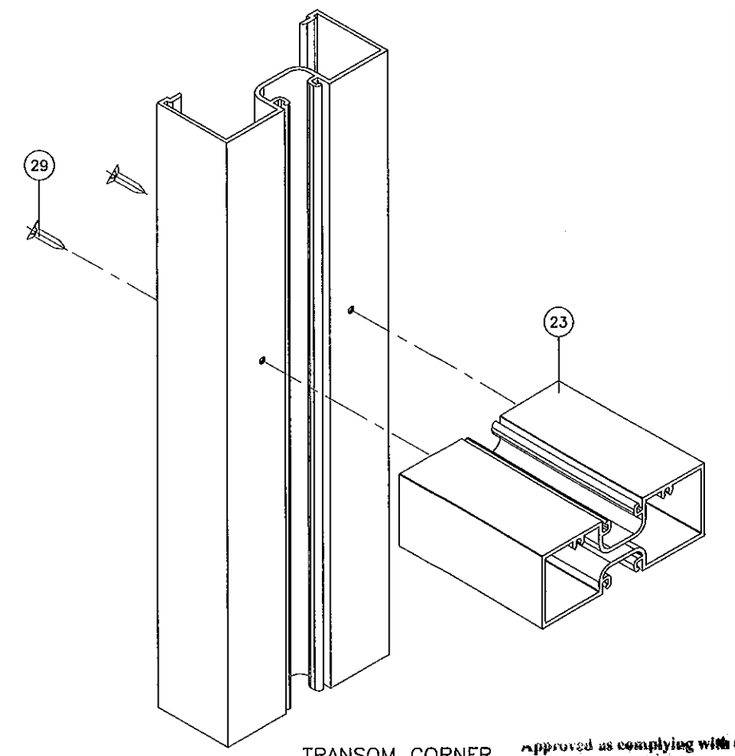

TRANSOM CORNER

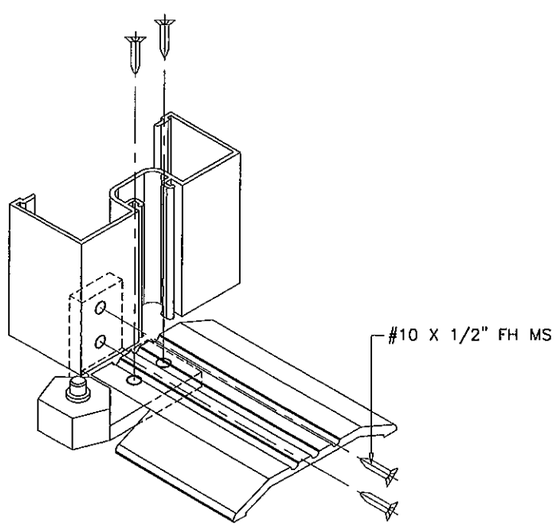

FRAME LOWER CORNER

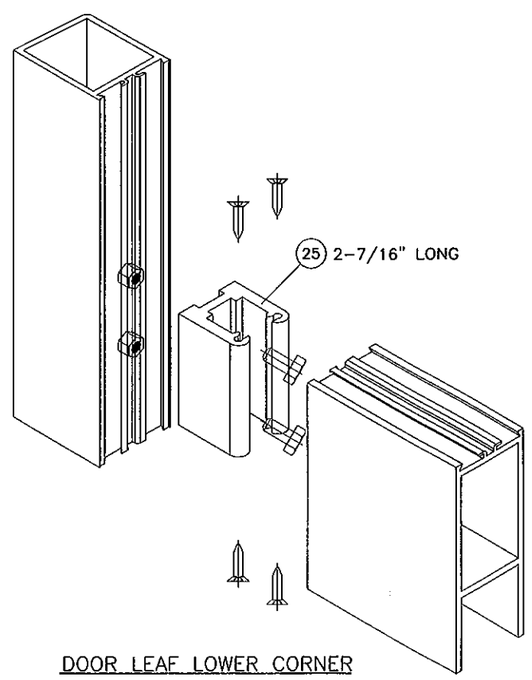

DOOR LEAF LOWER CORNER

Approved as complying with the Florida Building Code
Date 3/1/2012
NOA# 11-0722.07
Miami Dade Product Control
By Ishaq I. Chand

Engr: JAVAD AHMAD
CIVIL
FLA. PE # 70592
C.A.N. 3538
FEB 15 2012

AL-FAROOQ CORPORATION
ENGINEERS & PRODUCT DEVELOPMENT
1235 S.W. 87 AVE
MIAMI, FLORIDA 33174
TEL. (305) 264-8100 FAX. (305) 262-6978
COMP-ANL\W10-73MRG

NARROW STILE ALUMINUM OUT-SWING DOOR (N.I.)

MR. GLASS DOORS & WINDOWS INC.
7440 N.W. 66 STREET
MIAMI, FL. 33166
TEL. (305) 470-8284 FAX. (305) 470-8285

revisions:			
no	date	by	description
A	11.07.11		REV. PER BNC COMMENTS
B	01.23.12		REV. PER PERA COMMENTS

date: 10-07-10
scale: 3/8" = 1"
dr. by: HAMID
chk. by:

drawing no.
W10-73