MIAMI-DADE COUNTY
BUILDING AND NEIGHBORHOOD COMPLIANCE DEPARTMENT (BNC)
BOARD AND CODE ADMINISTRATION DIVISION

MIAMI-DADE COUNTY, FLORIDA
PRODUCT CONTROL SECTION
11805 SW 26th Street, Room 208
Miami, Florida 33175-2474
T (786) 315-2590 F (786) 315-2599
www.miamidade.gov/building

NOTICE OF ACCEPTANCE (NOA)

Mr. Glass Doors & Windows, Inc.
7440 NW 66 Street
Miami, FL 33166

SCOPE:

This NOA is being issued under the applicable rules and regulations governing the use of construction materials. The documentation submitted has been reviewed and accepted by Miami-Dade County BNC-Product Control Section to be used in Miami-Dade County and other areas where allowed by the Authority Having Jurisdiction (AHJ).

This NOA shall not be valid after the expiration date stated below. The Miami-Dade County Product Control Section (In Miami-Dade County) and/or the AHJ (in areas other than Miami-Dade County) reserve the right to have this product or material tested for quality assurance purposes. If this product or material fails to perform in the accepted manner, the manufacturer will incur the expense of such testing and the AHJ may immediately revoke, modify, or suspend the use of such product or material within their jurisdiction. BNC reserves the right to revoke this acceptance, if it is determined by Miami-Dade County Product Control Section that this product or material fails to meet the requirements of the applicable building code.

This product is approved as described herein, and has been designed to comply with the Florida Building Code, including the High Velocity Hurricane Zone.

DESCRIPTION: Series "MG-4500" Aluminum Storefront System – N.I.

APPROVAL DOCUMENT: Drawing No. **W10-75**, titled "MG-4500 Aluminum Flush Glazed System (N. I.)", sheets 1 through 9 of 9, dated 10/15/2010 with revision "**A**" dated 09/14/2011, prepared by Al-Farooq Corporation, signed and sealed by Javad Ahmad, P. E., bearing the Miami-Dade County Product Control Approval stamp with the Notice of Acceptance number and Approval date by the Miami-Dade County Product Control Section.

MISSILE IMPACT RATING: None.

LIMITATIONS: Miami-Dade County Product Control Approved External Shutters Or Protective Devices Shall Be Required.

LABELING: Each unit shall bear a permanent label with the manufacturer's name or logo, city, state, model/ series and following statement: "Miami-Dade County Product Control Approved" unless otherwise noted herein.

RENEWAL of this NOA shall be considered after a renewal application has been filed and there has been no change in the applicable building code negatively affecting the performance of this product.

TERMINATION of this NOA will occur after the expiration date or if there has been a revision or change in the materials, use, and/or manufacture of the product or process. Misuse of this NOA as an endorsement of any product, for sales, advertising or any other purposes shall automatically terminate this NOA. Failure to comply with any section of this NOA shall be cause for termination and removal of NOA.

ADVERTISEMENT: The NOA number preceded by the words Miami-Dade County, Florida, and followed by the expiration date may be displayed in advertising literature. If any portion of the NOA is displayed, then it shall be done in its entirety.

INSPECTION: A copy of this entire NOA shall be provided to the user by the manufacturer or its distributors and shall be available for inspection at the job site at the request of the Building Official.

This NOA consists of this page 1, evidence page E--1, as well as approval document mentioned above.

The submitted documentation was reviewed by **Jaime D. Gascon, P. E.**

MIAMI-DADE COUNTY APPROVED

J Gascon
9/29/11

A. DRAWINGS

1. Manufacturer's die drawings and sections.
2. Drawing No. **W10–75**, titled "MG–4500 Aluminum Flush Glazed System (N. I.)", sheets 1 through 9 of 9, dated 10/15/2010 with revision "**A**" dated 09/14/2011, prepared by Al–Farooq Corporation, signed and sealed by Javad Ahmad, P. E.

B. TESTS

1. Test reports on:1) Air Infiltration Test, per FBC, TAS 202–94
   2) Uniform Static Air Pressure Test, Loading per FBC TAS 202–94
   3) Water Resistance Test, per FBC, TAS 202–94
   4) Forced Entry Test for Side–Hinged Door Systems, per FBC 2411 3.2.1, TAS 202–94 and per AAMA 1304–02

   along with marked–up drawings and installation diagram of storefront, prepared by Hurricane Engineering & Testing, Inc., Test Reports No.'s **HETI–09–2545**, **HETI–09–2546**, **HETI–09–2547**, **HETI–09–2548**, **HETI–09–2549** and **HETI–09–2550**, dated 09/16/2009, signed and sealed by Candido F. Font, P. E.

C. CALCULATIONS

1. Anchor calculations and structural analysis, complying with FBC–2007, prepared by Al–Farooq Corporation, dated 03/31/2011, signed and sealed by Javad Ahmad, P. E. **Complies with ASTM E1300–04**

D. QUALITY ASSURANCE

1. Miami–Dade Building and Neighborhood Compliance Department (BNC).

E. MATERIAL CERTIFICATIONS

1. None.

F. STATEMENTS

1. Statement letter of conformance and compliance with the FBC–2007/ 2010, dated 09/28/2011, signed and sealed by Javad Ahmad, P. E.
2. Statement letter of no financial interest, conformance and compliance with the FBC–2007, dated 09/27/2011, signed and sealed by Javad Ahmad, P. E.
3. Laboratory compliance letter for Test Reports No.'s **HETI–09–2545**, **HETI–09–2546**, **HETI–09–2547**, **HETI–09–2548**, **HETI–09–2549** and **HETI–09–2550**, issued by Hurricane Engineering & Testing, Inc., dated 09/16/2009, signed and sealed by Candido F. Font, P. E.
4. Proposal No. **08–0989** issued by Product Control, dated September 26, 2008, signed by Ishaq Chanda, P. E.

G. OTHERS

1. None.

Jaime D. Gascon, P. E.
Product Control Section Supervisor
NOA No. 11–0720.08
Expiration Date: October 06, 2016
Approval Date: October 06, 2011

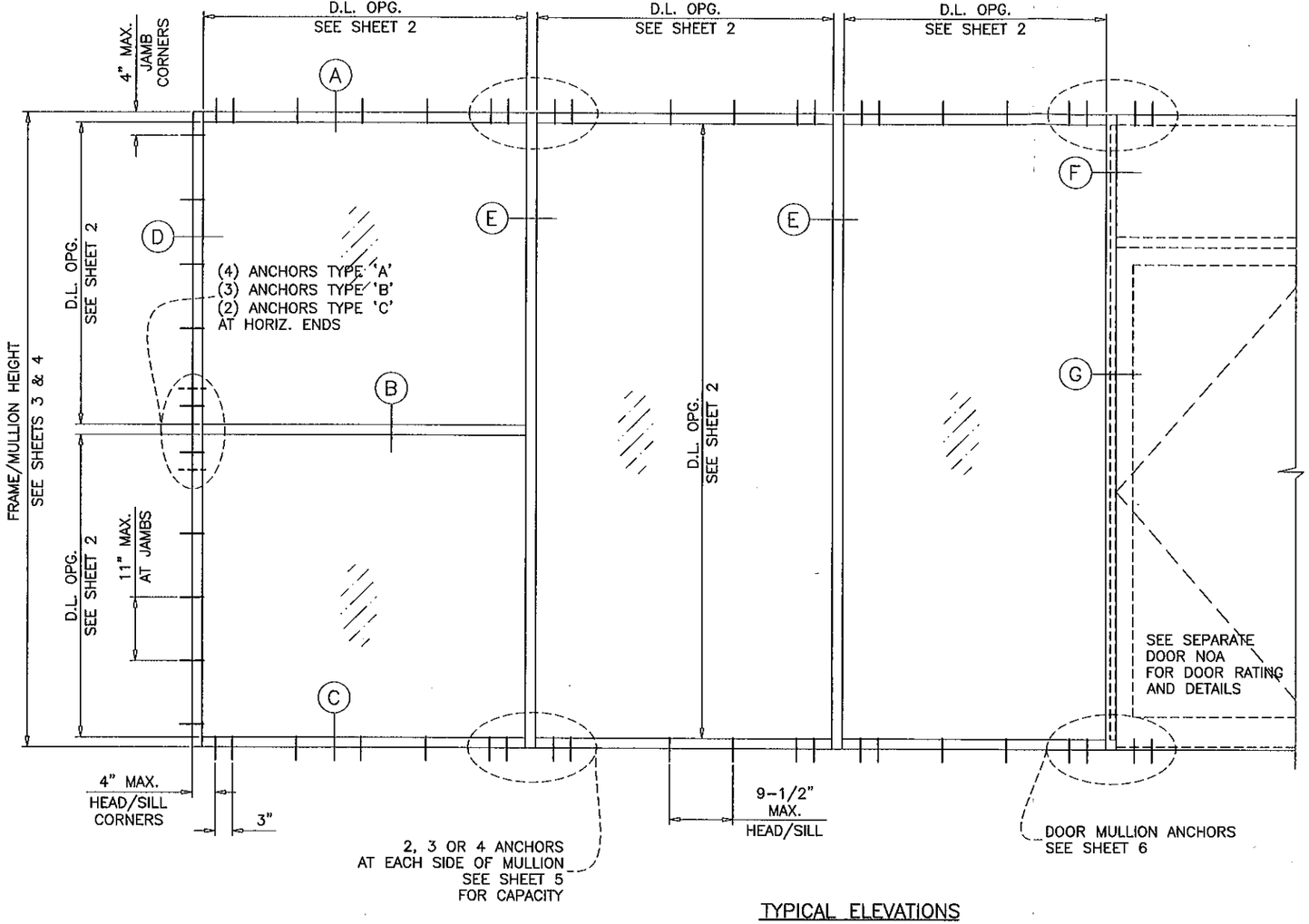

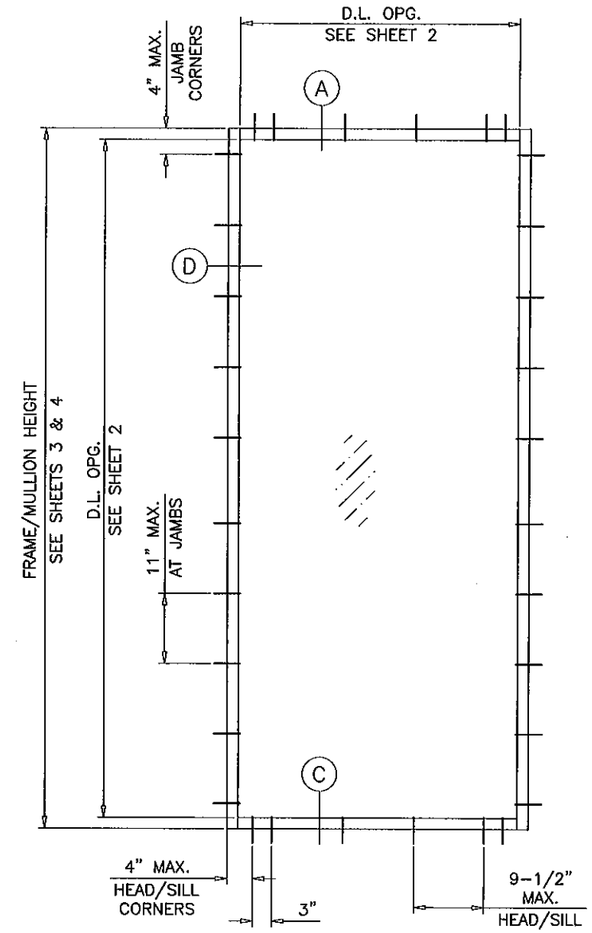

TYPICAL ELEVATIONS

MG-4500
ALUMINUM FLUSH GLAZED STOREFRONT SYSTEM

THIS SYSTEM MAY BE USED IN CONJUNCTION WITH MIAMI-DADE COUNTY APPROVED FRENCH DOORS.
LOWER DESIGN PRESSURE FROM STOREFRONT OR DOOR APPROVAL WILL APPLY TO ENTIRE SYSTEM.

CODE REQUIREMENTS FOR SAFEGUARDS MUST BE OBSERVED.

THIS PRODUCT HAS BEEN DESIGNED AND TESTED TO COMPLY WITH THE REQUIREMENTS OF THE FLORIDA BUILDING CODE 2007/2010 EDITION INCLUDING HIGH VELOCITY HURRICANE ZONE (HVHZ).

WOOD BUCKS BY OTHERS, MUST BE ANCHORED PROPERLY TO TRANSFER LOADS TO THE STRUCTURE.

ANCHORS SHALL BE AS LISTED, SPACED AS SHOWN ON DETAILS, ANCHORS EMBEDMENT TO BASE MATERIAL SHALL BE BEYOND WALL DRESSING OR STUCCO.

ANCHORING OR LOADING CONDITIONS NOT SHOWN IN THESE DETAILS ARE NOT PART OF THIS APPROVAL.

A LOAD DURATION INCREASE IS USED IN DESIGN OF ANCHORS INTO WOOD ONLY.

MATERIALS INCLUDING BUT NOT LIMITED TO STEEL/METAL SCREWS, THAT COME INTO CONTACT WITH OTHER DISSIMILAR MATERIALS SHALL MEET THE REQUIREMENTS OF 2007 FLORIDA BLDG. CODE SECTION 2003.8.4.

INSTRUCTIONS:

USE CHARTS AS FOLLOWS.

STEP 1 DETERMINE DESIGN WIND LOAD REQUIREMENT BASED ON WIND VELOCITY, BLDG. HEIGHT, WIND ZONE USING APPLICABLE ASCE 7 STANDARD.

STEP 2 SEE CHARTS ON SHEET 2 FOR DESIGN LOAD CAPACITY OF DESIRED GLASS SIZE.

STEP 3 CHECK MULLION CAPACITY FOR A GIVEN SPACING AND HEIGHT USING CHARTS ON SHEETS 3 & 4 FOR STOREFRONT MULLION AND SHEET 6 FOR DOOR MULLION.
THE CAPACITY SHOULD EXCEED THE DESIGN LOAD.

STEP 4 USING CHART ON SHEETS 5 SELECT ANCHOR OPTION WITH DESIGN RATING MORE THAN DESIGN LOAD SPECIFIED IN STEP 1 ABOVE.

STEP 5 THE LOWEST VALUE RESULTING FROM STEPS 2, 3 AND 4 SHALL APPLY TO ENTIRE SYSTEM.

THIS SYSTEM IS NOT RATED FOR IMPACT.
INSTALLATION OF THIS PRODUCT IN THE HVHZ AREA REQUIRES THE USE OF APPROVED SHUTTERS OR EXTERNAL PROTECTION DEVICES COMPLYING WITH HVHZ REQUIREMENTS.

INSTALLATION OF THIS SYSTEM OUTSIDE THE HVHZ AREA SHALL MEET THE APPLICABLE REQUIREMENTS FOR WIND BORNE DEBRIS PROTECTION.

Engr: JAVAD AHMAD
CIVIL
FLA. PE # 70592
C.A.N. 3538
SEP 28 2011

Approved as complying with the Florida Building Code
Date 10/06/2011
NOA# 11-0720.08
Miami Dade Product Control
By

AL-FAROOQ CORPORATION
ENGINEERS & PRODUCT DEVELOPMENT
1235 S.W. 87 AVE
MIAMI, FLORIDA 33174
TEL. (305) 264-8100 FAX. (305) 262-6978
COMP-ANL\W10-75MRG

MG-4500 ALUMINUM FLUSH GLAZED SYSTEM (N.I.)

MR. GLASS DOORS & WINDOWS INC.
7440 N.W. 66 STREET
MIAMI, FL. 33166
TEL. (305) 470-8284 FAX. (305) 470-8285

revisions:

no	date	by	description
A	09.14.11		REV. PER BNC COMMENTS

date: 10-15-10
scale: 1/2"=1'-0"
dr. by: HAMID
chk. by:

drawing no.
W10-75

GLASS LOAD CAPACITY – PSF		
NOMINAL DIMS.		1/4" TEMP. GLASS
D.L.O. WIDTH	D.L.O. HEIGHT	EXT.(+)/INT.(–)
22–1/4"	68–1/2"	210.0
28–1/4"		210.0
34–1/4"		198.1
40–1/4"		184.3
46–1/4"		176.6
52–1/4"		167.4
58–1/4"		156.2
64–1/4"		144.4
22–1/4"	74–1/2"	210.0
28–1/4"		210.0
34–1/4"		179.7
40–1/4"		164.9
46–1/4"		159.2
52–1/4"		153.1
58–1/4"		145.4
22–1/4"	80–1/2"	210.0
28–1/4"		210.0
34–1/4"		165.9
40–1/4"		149.0
46–1/4"		143.9
52–1/4"		140.3
58–1/4"		135.2
22–1/4"	86–1/2"	210.0
28–1/4"		208.9
34–1/4"		155.6
40–1/4"		136.2
46–1/4"		130.0
52–1/4"		128.0
22–1/4"	92–1/2"	210.0
28–1/4"		204.8
34–1/4"		148.0
40–1/4"		126.0
46–1/4"		118.8
22–1/4"	94–1/2"	210.0
28–1/4"		203.3
34–1/4"		146.4
40–1/4"		123.4
46–1/4"		116.2

GLASS LOAD CAPACITY – PSF		
NOMINAL DIMS.		1/4" TEMP. GLASS
D.L.O. WIDTH	D.L.O. HEIGHT	EXT.(+)/INT.(–)
22–1/4"	98–1/2"	210.0
28–1/4"		201.2
34–1/4"		142.8
40–1/4"		118.3
46–1/4"		109.6
22–1/4"	104–1/2"	210.0
28–1/4"		197.6
34–1/4"		139.3
40–1/4"		112.1
22–1/4"	110–1/2"	210.0
28–1/4"		194.0
34–1/4"		136.2
40–1/4"		107.5
22–1/4"	116–1/2"	210.0
28–1/4"		190.0
34–1/4"		134.1
40–1/4"		103.9

NOTE:
INTERPOLATION BETWEEN WIDTHS OR HEIGHTS ALLOWED.

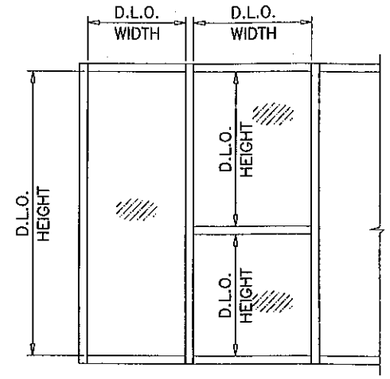

LOADS SHOWN IN CHARTS ARE FOR INSTALLATIONS WHERE WATER INFILTRATION RESISTANCE IS NOT REQUIRED.
LIMIT EXTERIOR LOADS TO +60.0 PSF FOR INSTALLATIONS WHERE WATER INFILTRATION RESISTANCE IS REQUIRED.

NOTE:
GLASS CAPACITIES ON THIS SHEET ARE BASED ON ASTM E1300–04 (3 SEC. GUSTS).

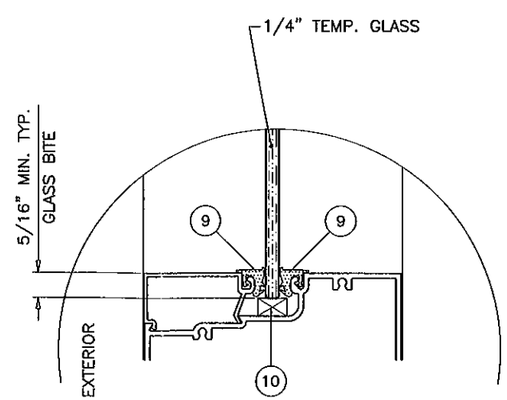

GLAZING DETAIL

GLASS

Engr: JAVAD AHMAD
CIVIL
FLA. PE # 70592
C.A.N. 3538

SEP 21 2011

Approved as complying with the Florida Building Code
Date 10/06/2011
NOA# 11-0720.08
Miami-Dade Product Control
By

AL-FAROOQ CORPORATION
ENGINEERS & PRODUCT DEVELOPMENT
1235 S.W. 87 AVE
MIAMI, FLORIDA 33174
TEL. (305) 264-8100 FAX. (305) 262-6978
COMP–ANL\W10–75MRG

MG–4500 ALUMINUM FLUSH GLAZED SYSTEM (N.I.)

MR. GLASS DOORS & WINDOWS INC.
7440 N.W. 66 STREET
MIAMI, FL. 33166
TEL (305) 470–8284 FAX. (305) 470–8285

revisions:

no	date	by	description
A	09.14.11		NO CHANGE THIS SHEET

date: 10–15–10
scale: 3/8" = 1"
dr. by: HAMID
chk. by:

drawing no.
W10–75

MULLION LOAD CAPACITY – PSF
WITHOUT INTERMEDIATE HORIZONTALS

NOMINAL DIMS.		MULLION 'M1'	MULLION 'M2'	MULLION 'M3'	MULLION 'M4'
WIDTH (W)	FRAME HEIGHT	EXT.(+)/INT.(−)	EXT.(+)/INT.(−)	EXT.(+)/INT.(−)	EXT.(+)/INT.(−)
24"	60"	130.0	130.0	130.0	130.0
30"		130.0	130.0	130.0	130.0
36"		130.0	130.0	130.0	130.0
42"		130.0	130.0	130.0	130.0
48"		130.0	130.0	130.0	130.0
54"		130.0	130.0	130.0	130.0
60"		130.0	130.0	130.0	130.0
66"		130.0	130.0	130.0	130.0
72"		130.0	130.0	130.0	130.0
24"	66"	130.0	130.0	130.0	130.0
30"		130.0	130.0	130.0	130.0
36"		130.0	130.0	130.0	130.0
42"		130.0	130.0	130.0	130.0
48"		127.8	130.0	130.0	130.0
54"		120.6	124.2	130.0	130.0
60"		116.4	120.0	130.0	130.0
66"		115.0	118.4	130.0	130.0
72"		–	–	130.0	130.0
24"	72"	130.0	130.0	130.0	130.0
30"		130.0	130.0	130.0	130.0
36"		127.3	130.0	130.0	130.0
42"		112.8	116.5	130.0	130.0
48"		102.8	106.1	130.0	130.0
54"		95.9	99.0	130.0	130.0
60"		91.3	94.3	130.0	130.0
66"		–	–	130.0	130.0
72"		–	–	130.0	130.0
24"	78"	130.0	130.0	130.0	130.0
30"		124.4	128.8	130.0	130.0
36"		106.0	109.8	130.0	130.0
42"		93.4	96.7	130.0	130.0
48"		84.5	87.5	130.0	130.0
54"		78.2	81.0	130.0	130.0
60"		–	–	124.5	123.7
66"		–	–	119.4	118.7
72"		–	–	116.5	115.7
24"	84"	130.0	130.0	130.0	130.0
30"		105.6	109.6	130.0	130.0
36"		89.7	93.1	130.0	130.0
42"		78.7	81.7	130.0	130.0
48"		70.8	73.5	120.7	119.9
54"		65.1	67.5	110.9	110.2
60"		–	–	103.7	103.1
66"		–	–	98.6	98.0
24"	90"	111.8	111.1	130.0	130.0
30"		90.6	90.3	130.0	130.0
36"		76.8	76.8	130.0	130.0
42"		67.2	67.4	115.4	114.7
48"		60.2	60.7	103.5	102.8
54"		–	–	94.6	94.0
60"		–	–	88.0	87.4

MULLION LOAD CAPACITY – PSF
WITHOUT INTERMEDIATE HORIZONTALS

NOMINAL DIMS.		MULLION 'M1'	MULLION 'M2'	MULLION 'M3'	MULLION 'M4'
WIDTH (W)	FRAME HEIGHT	EXT.(+)/INT.(−)	EXT.(+)/INT.(−)	EXT.(+)/INT.(−)	EXT.(+)/INT.(−)
24"	96"	92.9	91.2	130.0	130.0
30"		75.4	74.0	130.0	130.0
36"		63.9	62.8	115.3	114.5
42"		56.0	55.0	100.5	99.9
48"		50.2	49.3	89.8	89.2
54"		–	–	81.8	81.3
60"		–	–	75.7	75.2
24"	97–3/4"	87.9	86.3	130.0	130.0
30"		71.3	70.0	130.0	130.0
36"		60.4	59.3	111.0	110.3
42"		52.9	51.9	96.7	96.1
45"		49.9	49.0	91.2	90.6
46–1/2"		48.6	47.7	88.7	88.1
48"		–	–	86.3	85.8
54"		–	–	78.6	78.1
60"		–	–	72.7	72.2
24"	102"	–	–	130.0	130.0
30"		–	–	120.3	119.6
36"		–	–	101.6	100.9
42"		–	–	88.4	87.8
48"		–	–	78.7	78.2
54"		–	–	71.5	71.0
24"	108"	–	–	130.0	130.0
30"		–	–	107.0	106.3
36"		–	–	90.2	89.6
42"		–	–	78.3	77.8
48"		–	–	69.7	69.2
54"		–	–	63.1	62.7
24"	114"	–	–	118.8	118.0
30"		–	–	95.8	95.2
36"		–	–	80.6	80.1
42"		–	–	69.9	69.5
48"		–	–	62.1	61.7
24"	120"	–	–	107.1	106.4
30"		–	–	86.3	85.7
36"		–	–	72.5	72.1
42"		–	–	62.8	62.4
48"		–	–	55.7	55.3

NOTE:
INTERPOLATION BETWEEN WIDTHS OR HEIGHTS ALLOWED.

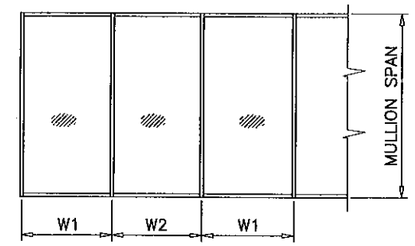

$$\text{WIDTH (W)} = \frac{W1 + W2}{2}$$

LOADS SHOWN IN CHARTS ARE FOR INSTALLATIONS WHERE WATER INFILTRATION RESISTANCE IS NOT REQUIRED.
LIMIT EXTERIOR LOADS TO +60.0 PSF FOR INSTALLATIONS WHERE WATER INFILTRATION RESISTANCE IS REQUIRED.

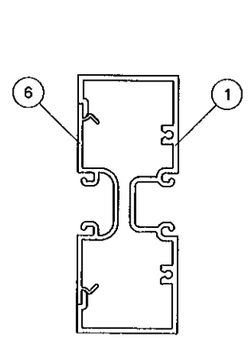

MULLION 'M1'

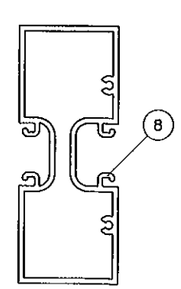

MULLION 'M2'

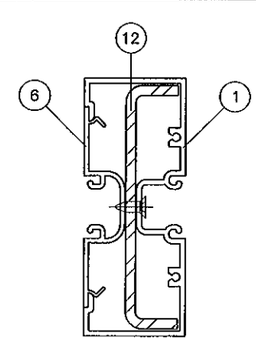

MULLION 'M3'

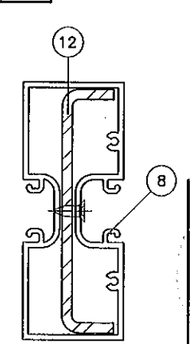

MULLION 'M4'

Engr: JAVAD AHMAD
CIVIL
FLA. PE # 70592
C.A.N. 3538

SEP 21 2011

Approved as complying with the Florida Building Code
Date 10/06/2011
NOA# 11-0720.08
Miami Dade Product Control
By

MULLIONS

AL-FAROOQ CORPORATION
ENGINEERS & PRODUCT DEVELOPMENT
1235 S.W. 87 AVE
MIAMI, FLORIDA 33174
TEL. (305) 264-8100 FAX. (305) 262-6978
COMP–ANL\W10–75MRG

MG–4500 ALUMINUM FLUSH GLAZED SYSTEM (N.I.)
MR. GLASS DOORS & WINDOWS INC.
7440 N.W. 66 STREET
MIAMI, FL. 33166
TEL. (305) 470–8284 FAX. (305) 470–8285

revisions:

no	date	by	description
A	09.14.11		NO CHANGE THIS SHEET

date: 10–15–10
scale: 3/8" = 1"
dr. by: HAMID
chk. by:

drawing no.
W10–75

MULLION LOAD CAPACITY – PSF
WITH INTERMEDIATE HORIZONTALS

NOMINAL DIMS.		MULLION 'M1'	MULLION 'M2'	MULLION 'M3'	MULLION 'M4'
WIDTH (W)	FRAME HEIGHT	EXT.(+)/INT.(–)	EXT.(+)/INT.(–)	EXT.(+)/INT.(–)	EXT.(+)/INT.(–)
24"	60"	130.0	130.0	130.0	130.0
30"		130.0	130.0	130.0	130.0
36"		130.0	130.0	130.0	130.0
42"		130.0	130.0	130.0	130.0
48"		128.8	130.0	130.0	130.0
54"		114.5	117.6	130.0	130.0
60"		103.1	105.9	130.0	130.0
66"		93.7	96.3	130.0	130.0
72"		85.9	88.2	130.0	130.0
24"	66"	130.0	130.0	130.0	130.0
30"		130.0	130.0	130.0	130.0
36"		130.0	130.0	130.0	130.0
42"		120.4	124.1	130.0	130.0
48"		105.4	108.6	130.0	130.0
54"		93.7	96.5	130.0	130.0
60"		84.3	86.9	130.0	130.0
66"		76.6	79.0	127.0	126.1
72"		–	–	116.4	115.6
24"	72"	130.0	130.0	130.0	130.0
30"		130.0	130.0	130.0	130.0
36"		116.9	120.8	130.0	130.0
42"		100.2	103.5	130.0	130.0
48"		87.7	90.6	130.0	130.0
54"		78.0	80.5	130.0	129.5
60"		70.2	72.5	117.3	116.6
66"		–	–	106.7	106.0
72"		–	–	97.8	97.2
24"	78"	130.0	130.0	130.0	130.0
30"		118.4	122.6	130.0	130.0
36"		98.7	102.2	130.0	130.0
42"		84.6	87.6	130.0	130.0
48"		74.0	76.6	125.0	124.2
54"		65.8	68.1	111.1	110.4
60"		–	–	100.0	99.3
66"		–	–	90.9	90.3
72"		–	–	83.3	82.8
24"	84"	126.8	130.0	130.0	130.0
30"		101.5	105.2	130.0	130.0
36"		84.6	87.7	130.0	130.0
42"		72.5	75.2	123.2	122.4
48"		63.4	65.8	107.8	107.1
54"		56.4	58.5	95.8	95.2
60"		–	–	86.2	85.7
66"		–	–	78.4	77.9
24"	90"	110.2	108.2	130.0	130.0
30"		88.2	86.5	130.0	130.0
36"		73.5	72.1	125.2	124.4
42"		63.0	61.8	107.3	106.6
48"		55.1	54.1	93.9	93.3
54"		–	–	83.4	82.9
60"		–	–	75.1	74.6

MULLION LOAD CAPACITY – PSF
WITH INTERMEDIATE HORIZONTALS

NOMINAL DIMS.		MULLION 'M1'	MULLION 'M2'	MULLION 'M3'	MULLION 'M4'
WIDTH (W)	FRAME HEIGHT	EXT.(+)/INT.(–)	EXT.(+)/INT.(–)	EXT.(+)/INT.(–)	EXT.(+)/INT.(–)
24"	96"	90.8	89.1	130.0	130.0
30"		72.6	71.3	130.0	130.0
36"		60.5	59.4	110.0	109.3
42"		51.9	50.9	94.3	93.7
48"		45.4	44.6	82.5	82.0
54"		–	–	73.3	72.9
60"		–	–	66.0	65.6
24"	97–3/4"	86.0	84.4	130.0	130.0
30"		68.8	67.5	127.3	126.5
36"		57.3	56.3	106.1	105.4
42"		49.2	48.2	90.9	90.4
45"		45.9	45.0	84.9	84.3
46–1/2"		44.4	43.6	82.1	81.6
48"		–	–	79.6	79.1
54"		–	–	70.7	70.3
60"		–	–	63.7	63.3
24"	102"	–	–	130.0	130.0
30"		–	–	116.9	116.2
36"		–	–	97.4	96.8
42"		–	–	83.5	83.0
48"		–	–	73.1	72.6
54"		–	–	65.0	64.5
24"	108"	–	–	130.0	129.5
30"		–	–	104.3	103.6
36"		–	–	86.9	86.4
42"		–	–	74.5	74.0
48"		–	–	65.2	64.8
54"		–	–	57.9	57.6
24"	114"	–	–	117.0	116.3
30"		–	–	93.6	93.0
36"		–	–	78.0	77.5
42"		–	–	66.9	66.4
48"		–	–	58.5	58.1
24"	120"	–	–	105.6	104.9
30"		–	–	84.5	83.9
36"		–	–	70.4	70.0
42"		–	–	60.3	60.0
48"		–	–	52.8	52.5

NOTE: INTERPOLATION BETWEEN WIDTHS OR HEIGHTS ALLOWED.

LOADS SHOWN IN CHARTS ARE FOR INSTALLATIONS WHERE WATER INFILTRATION RESISTANCE IS NOT REQUIRED.
LIMIT EXTERIOR LOADS TO +60.0 PSF FOR INSTALLATIONS WHERE WATER INFILTRATION RESISTANCE IS REQUIRED.

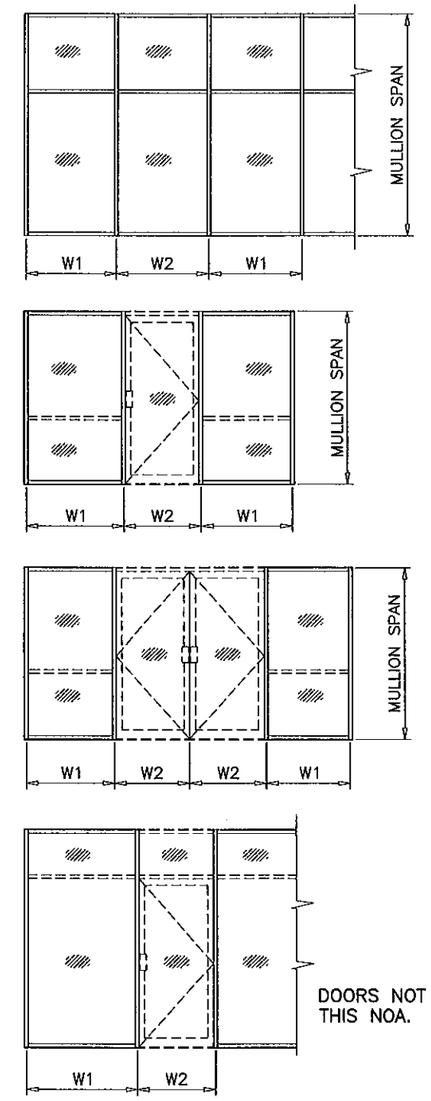

DOORS NOT PART OF THIS NOA.

$$\text{WIDTH (W)} = \frac{W1 + W2}{2}$$

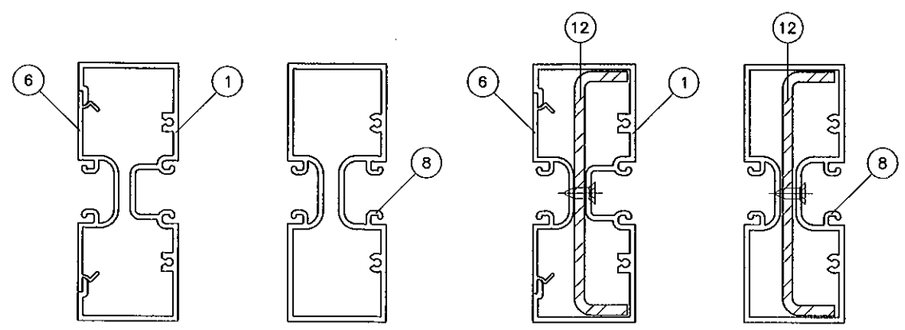

MULLION 'M1' MULLION 'M2' MULLION 'M3' MULLION 'M4'

Engr: JAVAD AHMAD
CIVIL
FLA. PE. # 70592
C.A.N. 3538

SEP 21 2011

Approved as complying with the Florida Building Code
Date 10/06/2011
NOA# 11-0720.08
Miami-Dade Product Control
By

MULLIONS

AL-FAROOQ CORPORATION
ENGINEERS & PRODUCT DEVELOPMENT
1235 S.W. 87 AVE
MIAMI, FLORIDA 33174
TEL. (305) 264-8100 FAX. (305) 262-6978
COMP-ANL\W10-75MRG

MG-4500 ALUMINUM FLUSH GLAZED SYSTEM (N.I.)
MR. GLASS DOORS & WINDOWS INC.
7440 N.W. 66 STREET
MIAMI, FL. 33166
TEL. (305) 470-8284 FAX. (305) 470-8285

revisions:

no	date	by	description
A	09.14.11		REV. PER BNC COMMENTS

date: 10-15-10
scale: 3/8" = 1"
dr. by: HAMID
chk. by:

drawing no. W10-75

ANCHOR LOAD CAPACITY – PSF
EXT.(+) & INT.(–)

NOMINAL DIMS.		ANCHOR TYPE 'A'			ANCHOR TYPE 'B'		ANCHOR TYPE 'C'
WIDTH (W)	FRAME HEIGHT	A2	A3	A4	B2	B3	C2
24"	60"	130.0	130.0	130.0	130.0	130.0	130.0
30"		126.1	130.0	130.0	130.0	130.0	130.0
36"		105.1	130.0	130.0	130.0	130.0	130.0
42"		90.1	130.0	130.0	130.0	130.0	130.0
48"		78.8	118.2	130.0	122.4	130.0	130.0
54"		70.0	105.1	130.0	108.8	130.0	130.0
60"		63.0	94.6	126.1	97.9	130.0	130.0
66"		57.3	86.0	114.6	89.0	130.0	130.0
72"		52.5	78.8	105.1	81.6	122.4	124.8
24"	66"	130.0	130.0	130.0	130.0	130.0	130.0
30"		114.6	130.0	130.0	130.0	130.0	130.0
36"		95.5	130.0	130.0	130.0	130.0	130.0
42"		81.9	122.8	130.0	127.2	130.0	130.0
48"		71.6	107.5	130.0	111.3	130.0	130.0
54"		63.7	95.5	127.4	98.9	130.0	130.0
60"		57.3	86.0	114.6	89.0	130.0	130.0
66"		52.1	78.1	104.2	80.9	121.4	123.8
72"		47.8	71.6	95.5	74.2	111.3	113.5
24"	72"	130.0	130.0	130.0	130.0	130.0	130.0
30"		105.1	130.0	130.0	130.0	130.0	130.0
36"		87.6	130.0	130.0	130.0	130.0	130.0
42"		75.0	112.6	130.0	116.6	130.0	130.0
48"		65.7	98.5	130.0	102.0	130.0	130.0
54"		58.4	87.6	116.7	90.7	130.0	130.0
60"		52.5	78.8	105.1	81.6	122.4	124.8
66"		47.8	71.6	95.5	74.2	111.3	113.5
72"		43.8	65.7	87.6	68.0	102.0	104.0
24"	78"	121.2	130.0	130.0	130.0	130.0	130.0
30"		97.0	130.0	130.0	130.0	130.0	130.0
36"		80.8	121.2	130.0	125.5	130.0	130.0
42"		69.3	103.9	130.0	107.6	130.0	130.0
48"		60.6	90.9	121.2	94.2	130.0	130.0
54"		53.9	80.8	107.8	83.7	125.5	128.0
60"		48.5	72.7	97.0	75.3	113.0	115.2
66"		44.1	66.1	88.2	68.5	102.7	104.7
72"		40.4	60.6	80.8	62.8	94.2	96.0
24"	84"	112.6	130.0	130.0	130.0	130.0	130.0
30"		90.1	130.0	130.0	130.0	130.0	130.0
36"		75.0	112.6	130.0	116.6	130.0	130.0
42"		64.3	96.5	128.7	99.9	130.0	130.0
48"		56.3	84.4	112.6	87.4	130.0	130.0
54"		50.0	75.0	100.1	77.7	116.6	118.9
60"		45.0	67.5	90.1	69.9	104.9	107.0
66"		40.9	61.4	81.9	63.6	95.4	97.2
24"	96"	98.5	130.0	130.0	130.0	130.0	130.0
30"		78.8	118.2	130.0	122.4	130.0	130.0
36"		65.7	98.5	130.0	102.0	130.0	130.0
42"		56.3	84.4	112.6	87.4	130.0	130.0
48"		49.3	73.9	98.5	76.5	114.8	117.0
54"		43.8	65.7	87.6	68.0	102.0	104.0
60"		39.4	59.1	78.8	61.2	91.8	93.6

ANCHOR LOAD CAPACITY – PSF
EXT.(+) & INT.(–)

NOMINAL DIMS.		ANCHOR TYPE 'A'			ANCHOR TYPE 'B'		ANCHOR TYPE 'C'
WIDTH (W)	FRAME HEIGHT	A2	A3	A4	B2	B3	C2
24"	97–3/4"	96.7	130.0	130.0	130.0	130.0	130.0
30"		77.4	116.1	130.0	120.2	130.0	130.0
36"		64.5	96.7	129.0	100.2	130.0	130.0
42"		55.3	82.9	110.6	85.9	128.8	130.0
48"		48.4	72.6	96.7	75.1	112.7	114.9
54"		43.0	64.5	86.0	66.8	100.2	102.1
60"		38.7	58.0	77.4	60.1	90.2	91.9
24"	102"	92.7	130.0	130.0	130.0	130.0	130.0
30"		74.2	111.2	130.0	115.2	130.0	130.0
36"		61.8	92.7	123.6	96.0	130.0	130.0
42"		53.0	79.5	105.9	82.3	123.4	125.8
48"		46.4	69.5	92.7	72.0	108.0	110.1
54"		41.2	61.8	82.4	64.0	96.0	97.9
24"	108"	87.6	130.0	130.0	130.0	130.0	130.0
30"		70.0	105.1	130.0	108.8	130.0	130.0
36"		58.4	87.6	116.7	90.7	130.0	130.0
42"		50.0	75.0	100.1	77.7	116.6	118.9
48"		43.8	65.7	87.6	68.0	102.0	104.0
54"		38.9	58.4	77.8	60.4	90.7	92.4
24"	114"	82.9	124.4	130.0	128.8	130.0	130.0
30"		66.4	99.5	130.0	103.1	130.0	130.0
36"		55.3	82.9	110.6	85.9	128.8	130.0
42"		47.4	71.1	94.8	73.6	110.4	112.6
48"		41.5	62.2	82.9	64.4	96.6	98.5
24"	120"	78.8	118.2	130.0	122.4	130.0	130.0
30"		63.0	94.6	126.1	97.9	130.0	130.0
36"		52.5	78.8	105.1	81.6	122.4	124.8
42"		45.0	67.5	90.1	69.9	104.9	107.0
48"		39.4	59.1	78.8	61.2	91.8	93.6

NOTE: INTERPOLATION BETWEEN WIDTHS OR HEIGHTS ALLOWED.

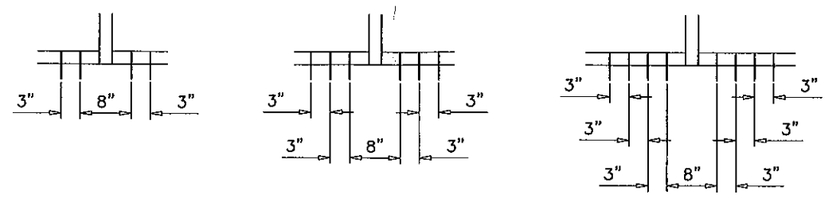

A2, B2, C2 A3, B3 A4

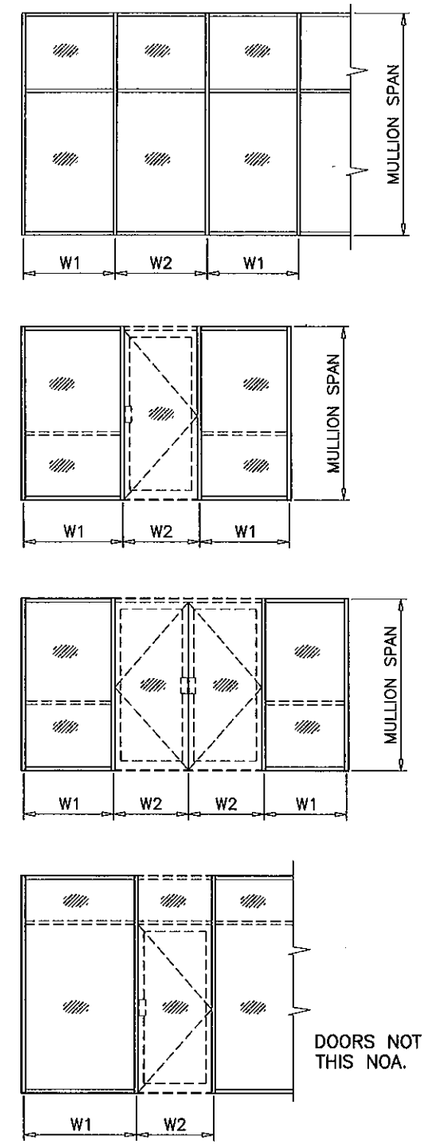

DOORS NOT PART OF THIS NOA.

$$\text{WIDTH (W)} = \frac{W1 + W2}{2}$$

ANCHORS TYPES: SEE SHEET 7 FOR DESCRIPTION

A2 = (2) ANCHORS TYPE 'A' AT EACH SIDE OF MULLION
A3 = (3) ANCHORS TYPE 'A' AT EACH SIDE OF MULLION
A4 = (4) ANCHORS TYPE 'A' AT EACH SIDE OF MULLION

B2 = (2) ANCHORS TYPE 'B' AT EACH SIDE OF MULLION
B3 = (3) ANCHORS TYPE 'B' AT EACH SIDE OF MULLION

C2 = (2) ANCHORS TYPE 'C' AT EACH SIDE OF MULLION

ALL OTHER ANCHORS TO BE SPACED AS PER ELEVATION.

Engr: JAVAD AHMAD
CIVIL
FLA. PE # 70592
C.A.N. 3538

SEP 21 2011

Approved as complying with the Florida Building Code
Date 10/06/2011
NOA# 11-0520.08
Miami Dade Product Control
By

ANCHORS

AL-FAROOQ CORPORATION
ENGINEERS & PRODUCT DEVELOPMENT
1235 S.W. 87 AVE
MIAMI, FLORIDA 33174
TEL. (305) 264-8100 FAX. (305) 262-6978
COMP–ANL\W10–75MRG

MG–4500 ALUMINUM FLUSH GLAZED SYSTEM (N.I.)

MR. GLASS DOORS & WINDOWS INC.
7440 N.W. 66 STREET
MIAMI, FL. 33166
TEL. (305) 470–8284 FAX. (305) 470–8285

revisions:

no	date	by	description
A	09.14.11		REV. PER BNC COMMENTS

date: 10–15–10
scale: 3/8" = 1"
dr. by: HAMID
chk. by:

drawing no. W10–75

DOOR MULLION LOAD CAPACITY – PSF				
NOMINAL DIMS.				DOOR MULLION
FRAME HEIGHT INCHES	DOOR HEIGHT INCHES	WIDTH (W1) INCHES	WIDTH (W2) INCHES	EXT. (+) INT. (–)
96	84	72	18	125.0
			24	114.3
			30	105.2
			36	97.5
			42	90.8
			48	85.0
102	84	72	18	104.0
			24	95.6
			30	88.5
			36	82.3
			42	76.9
			48	72.2
108	84	72	18	87.9
			24	81.2
			30	75.5
			36	70.4
			42	66.0
			48	62.1
114	84	72	18	75.3
			24	69.8
			30	65.1
			36	60.9
			42	57.3
120	84	72	18	65.2
			24	60.7
			30	56.7
			36	53.2
			42	50.1

DOOR MULLION LOAD CAPACITY – PSF				
NOMINAL DIMS.				DOOR MULLION
FRAME HEIGHT INCHES	DOOR HEIGHT INCHES	WIDTH (W1) INCHES	WIDTH (W2) INCHES	EXT. (+) INT. (–)
96	90	72	18	130.0
			24	122.7
			30	112.3
			36	103.4
			42	95.9
			48	89.4
102	90	72	18	111.7
			24	102.1
			30	93.9
			36	86.9
			42	81.0
			48	75.7
108	90	72	18	93.9
			24	86.2
			30	79.7
			36	74.1
			42	69.2
			48	64.9
114	90	72	18	80.0
			24	73.8
			30	68.5
			36	63.9
			42	59.8
120	90	72	18	69.0
			24	63.9
			30	59.5
			36	55.6
			42	52.2

DOOR MULLION LOAD CAPACITY – PSF				
NOMINAL DIMS.				DOOR MULLION
FRAME HEIGHT INCHES	DOOR HEIGHT INCHES	WIDTH (W1) INCHES	WIDTH (W2) INCHES	EXT. (+) INT. (–)
102	96	72	18	120.3
			24	109.1
			30	99.9
			36	92.0
			42	85.3
			48	79.5
108	96	72	18	100.5
			24	91.7
			30	84.3
			36	78.0
			42	72.6
			–	67.9
114	96	72	18	85.2
			24	78.1
			30	72.2
			36	67.0
			42	62.6
120	96	72	18	73.1
			24	67.4
			30	62.5
			36	58.2
			42	54.5

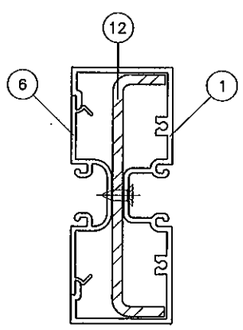

DOOR MULLION
WITH REINFORCING

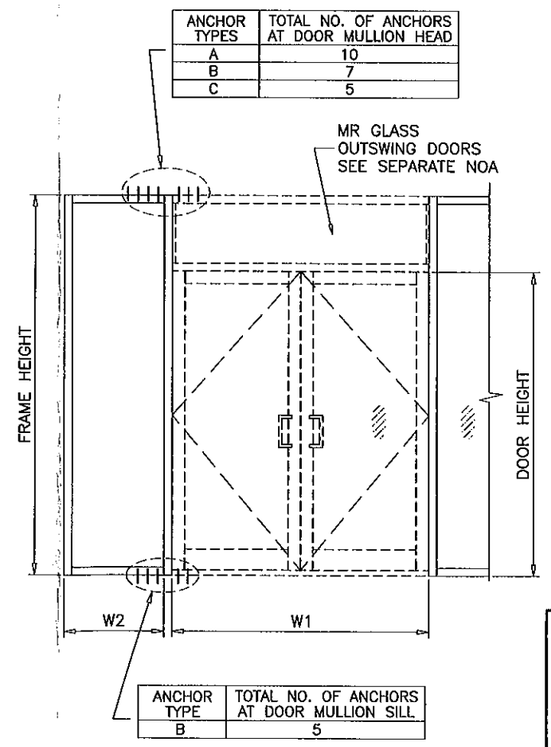

ANCHOR TYPES	TOTAL NO. OF ANCHORS AT DOOR MULLION HEAD
A	10
B	7
C	5

ANCHOR TYPE	TOTAL NO. OF ANCHORS AT DOOR MULLION SILL
B	5

Engr: JAVAD AHMAD
CIVIL
FLA. PE # 70592
C.A.N. 3538

SEP 21 2011

Approved as complying with the Florida Building Code
Date 10/06/2011
NOA# 11-0920.08
Miami Dade Product Control
By

DOOR MULLION

AL-FAROOQ CORPORATION
ENGINEERS & PRODUCT DEVELOPMENT
1235 S.W. 87 AVE
MIAMI, FLORIDA 33174
TEL. (305) 264-8100 FAX. (305) 262-6978

COMP–ANL\W10–75MRG

MG–4500 ALUMINUM FLUSH GLAZED SYSTEM (N.I.)

MR. GLASS DOORS & WINDOWS INC.
7440 N.W. 66 STREET
MIAMI, FL. 33166
TEL. (305) 470–8284 FAX. (305) 470–8285

revisions:

no	date	by	description
A	09.14.11		NO CHANGE THIS SHEET

date: 10–15–10
scale: 3/8" = 1"
dr. by: HAMID
chk. by:

drawing no.
W10–75

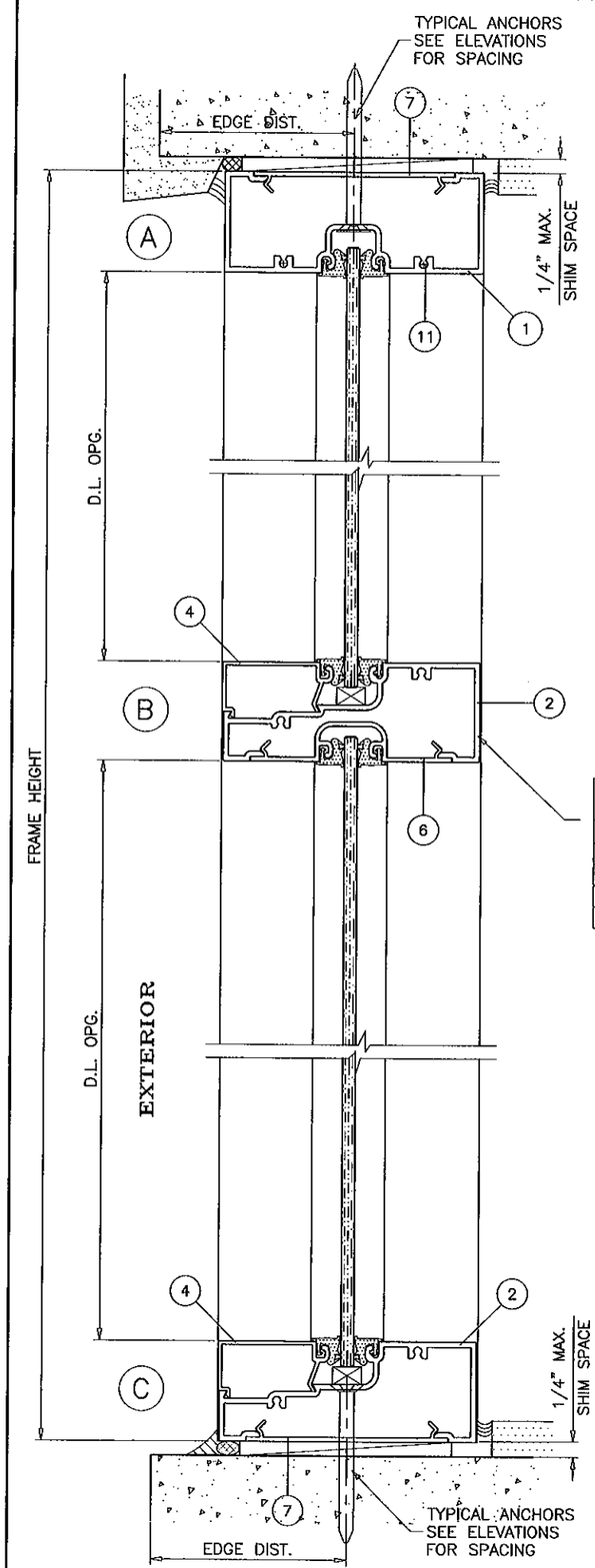

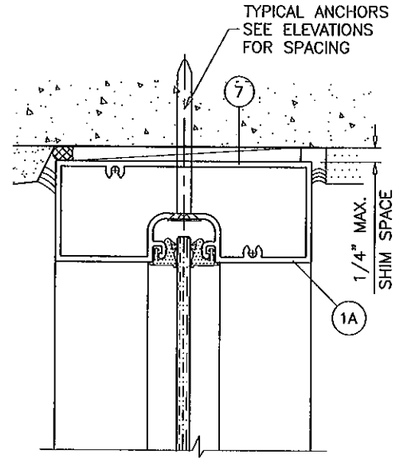

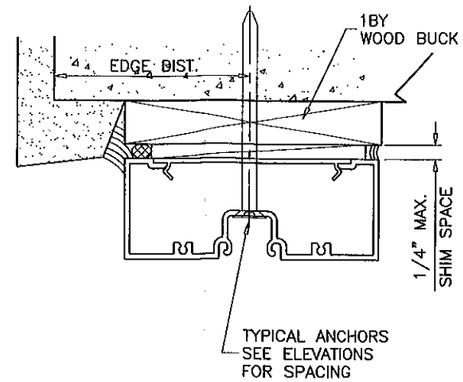

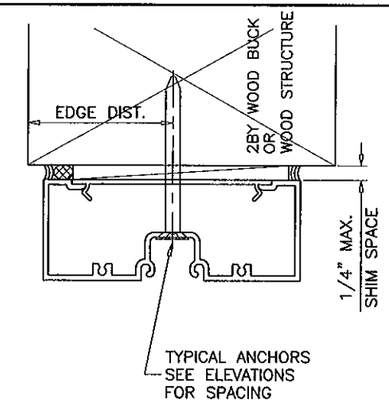

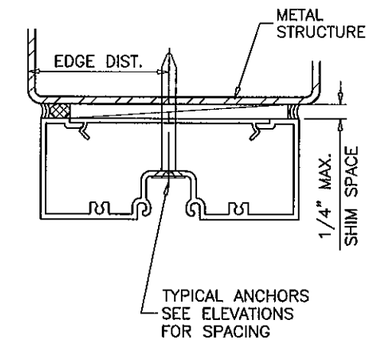

LIMIT MAX. DESIGN LOADS FOR HORIZONTAL AS FOLLOWS	
HORIZ. SPAN MAX.	LOADS
70–1/4"	58.2 PSF
64–1/4"	76.9 PSF
58–1/4"	106.0 PSF
52–1/4"	130.0 PSF

WOOD BUCKS AND METAL STRUCTURE NOT BY MR. GLASS MUST SUSTAIN LOADS IMPOSED BY GLAZING SYSTEM AND TRANSFER THEM TO THE BUILDING STRUCTURE.

TYPICAL ANCHORS: SEE ELEV. FOR SPACING

TYPE 'A'– 1/4" DIA. TAPCON BY 'ITW' OR (Fu=120 KSI, Fy=92 KSI)
1/4" DIA. ULTRACON BY 'ELCO' (Fu=177 KSI, Fy=155 KSI)
INTO 2BY WOOD BUCKS OR WOOD STRUCTURES
1–3/8" MIN. PENETRATION INTO WOOD

THRU 1BY BUCKS INTO CONC. OR MASONRY
1–1/4" MIN. EMBED INTO CONC. OR MASONRY

TYPE 'B'– 1/4" DIA. TAPCON BY 'ITW' OR (Fu=120 KSI, Fy=92 KSI)
1/4" DIA. ULTRACON BY 'ELCO' (Fu=177 KSI, Fy=155 KSI)
DIRECTLY INTO CONC. OR MASONRY
1–1/4" MIN. EMBED INTO CONC. OR MASONRY

TYPE 'C'– #14 SMS OR SELF DRILLING SCREWS (GRADE 2 CRS) (Fu=92 KSI, Fy=57 KSI)
INTO METAL STRUCTURES
STEEL : 1/8" THK. MIN. (Fy = 36 KSI MIN.)
ALUMINUM : 1/8" THK. MIN. (6063–T5 MIN.)
(STEEL IN CONTACT WITH ALUMINUM TO BE PLATED OR PAINTED)

TYPICAL EDGE DISTANCE

INTO CONCRETE AND MASONRY = 2–1/2" MIN.
INTO WOOD STRUCTURE = 1" MIN.
INTO METAL STRUCTURE = 3/4" MIN.

CONCRETE AT HEAD, SILL OR JAMBS f'c = 3000 PSI MIN.
C–90 HOLLOW/FILLED BLOCK AT JAMBS f'm = 2000 PSI MIN.

Engr: JAVAD AHMAD
CIVIL
FLA. PE # 70592
C.A.N: 3538

SEP 21 2011

Approved as complying with the Florida Building Code
Date 10/06/2011
NOA# 11-0720.08
Miami Dade Product Control
By

AL-FAROOQ CORPORATION
ENGINEERS & PRODUCT DEVELOPMENT
1235 S.W. 87 AVE
MIAMI, FLORIDA 33174
TEL. (305) 264-8100 FAX. (305) 262-6978
COMP–ANL\W10–75MRG

MC–4500 ALUMINUM FLUSH GLAZED SYSTEM (N.I.)

MR. GLASS DOORS & WINDOWS INC.
7440 N.W. 66 STREET
MIAMI, FL. 33166
TEL. (305) 470–8284 FAX. (305) 470–8285

revisions:

no	date	by	description
A	09.14.11		REV. PER BNC COMMENTS

date: 10–15–10
scale: 3/8" = 1"
dr. by: HAMID
chk. by:

drawing no. W10–75

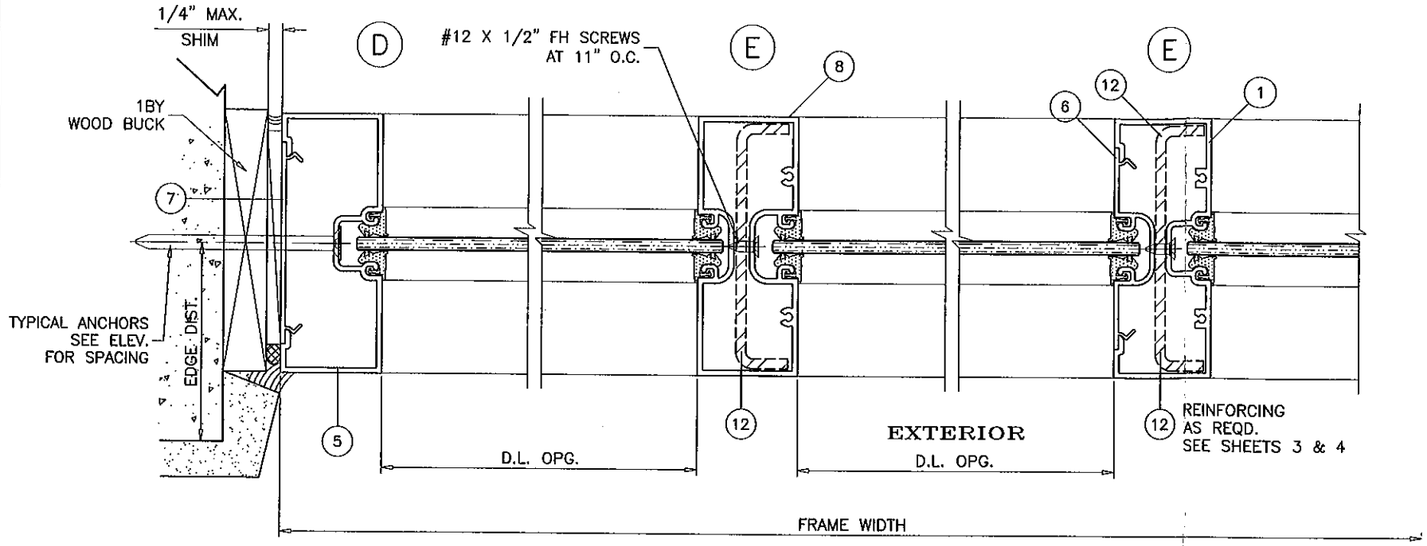

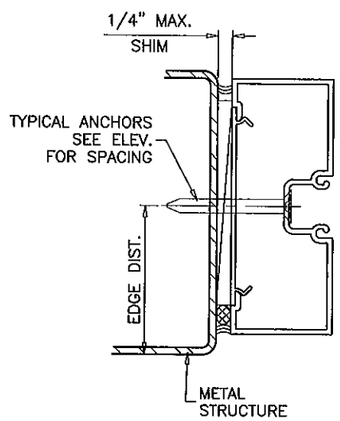

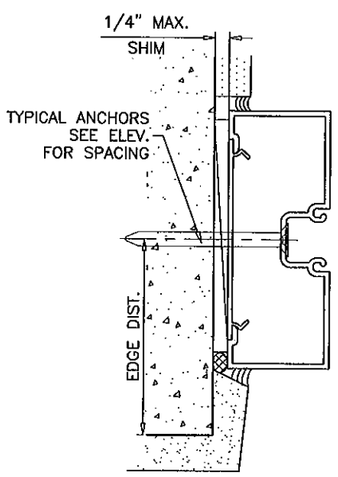

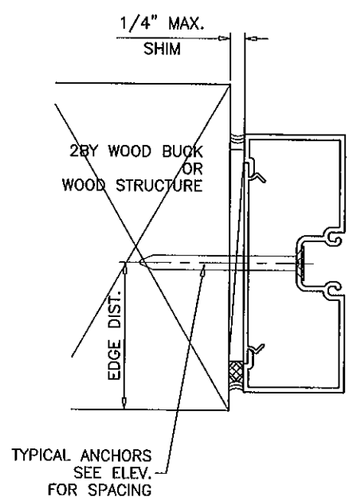

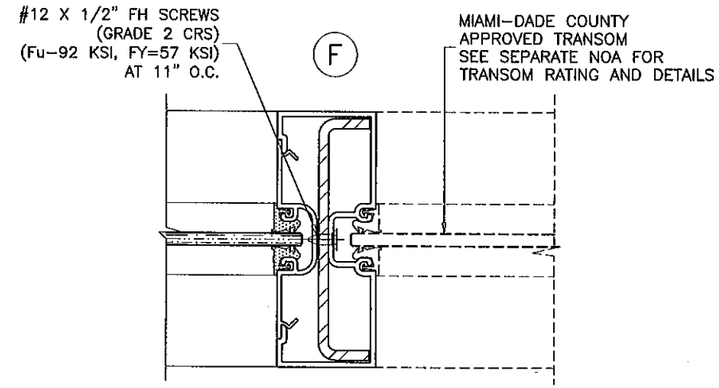

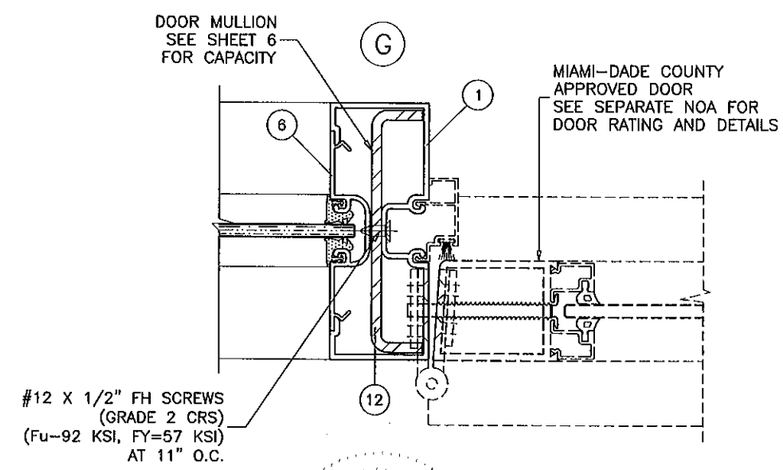

Engr: JAVAD AHMAD
CIVIL
FLA, PE # 70592
C.A.N. 3838

SEP 21 2011

Approved as complying with the
Florida Building Code
Date 10/06/2011
NOA# 11-0720.08
Miami Dade Product Control
By

AL-FAROOQ CORPORATION
ENGINEERS & PRODUCT DEVELOPMENT
1235 S.W. 87 AVE
MIAMI, FLORIDA 33174
TEL. (305) 264-8100 FAX. (305) 262-6978

COMP-ANL\W10-75MRG

MG-4500 ALUMINUM FLUSH GLAZED SYSTEM (N.I.)

MR. GLASS DOORS & WINDOWS INC.
7440 N.W. 66 STREET
MIAMI, FL. 33166
TEL (305) 470-8284 FAX. (305) 470-8285

revisions:

no	date	by	description
A	09.14.11		REV. PER BNC COMMENTS

date: 10-15-10
scale: 3/8" = 1"
dr. by: HAMID
chk. by:

drawing no.
W10-75

sheet 8 of 9

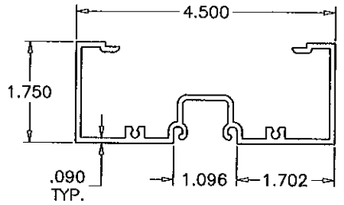

1 FRAME HEAD/MULLION/JAMB
MG-452

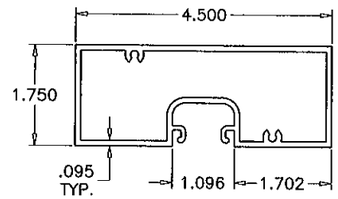

1A ALT. FRAME HEAD
MG-457

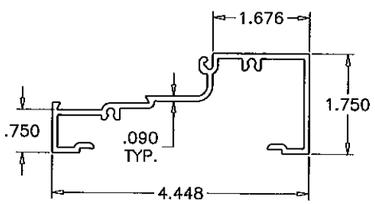

2 FRAME SILL/HORIZONTAL
MG-453

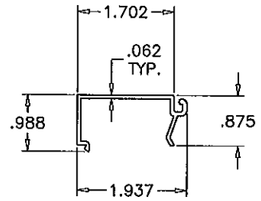

4 GLAZING STOP
MG-454

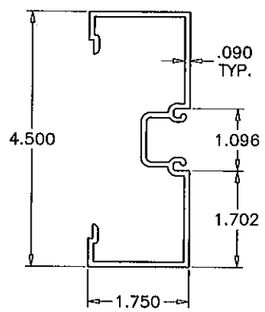

5 FRAME JAMB

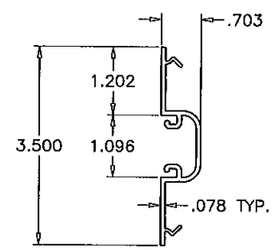

6 POCKET FILLER
MG-458

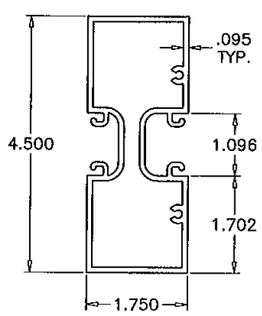

8 FRAME MULLION
MG-456

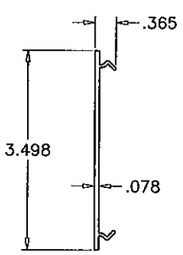

7 SNAP IN COVER
MG-459

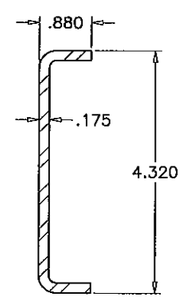

12 STEEL REINFORCING

ITEM NO.	PART NUMBER	QUANTITY	DESCRIPTION	MATERIAL	MANF./SUPPLIER/REMARKS
1	MG-452	–	FRAME HEAD/MULLION/JAMB	6063-T6	–
1A	MG-457	–	ALT. FRAME HEAD	6063-T6	–
2	MG-453	–	FRAME SILL/HORIZONTAL	6063-T6	–
4	MG-454	–	GLAZING STOP	6063-T6	–
5	–	–	FRAME JAMB	6063-T6	–
6	MG-458	–	POCKET FILLER	6063-T6	–
7	MG-459	–	SNAP IN COVER	6063-T6	–
8	MG-456	–	FRAME MULLION	6063-T6	–
9	2028	AS REQD.	GLAZING GASKET	NEOPRENE	CAROLINA CUSTOM RUBBER, DUROMETER 70±5
10	SB563	2/ LITE	SETTING BLOCK, 1/4" X 1/2" X 2" LONG, AT 3" FROM EACH END	NEOPRENE	C.R. LAURENCE, DUROMETER 80±5
11	#8 X 1"	2/ CORNER	ASSEMBLY SCREWS (PH SELF DRILLING)	–	GRADE 4 CRS, Fu=92 KSI, FY=120 KSI
12	–	–	REINFORCING CHANNEL	STEEL	ASTM A36, Fy 36 KSI

SEALANTS:

ALL FRAME CORNERS, JOINTS, MULLION SEAMS AND PERIMETER OF GLAZING BEAD TO FRAME TO BE SEALED WITH DOW CORNING 795 SEALANT.

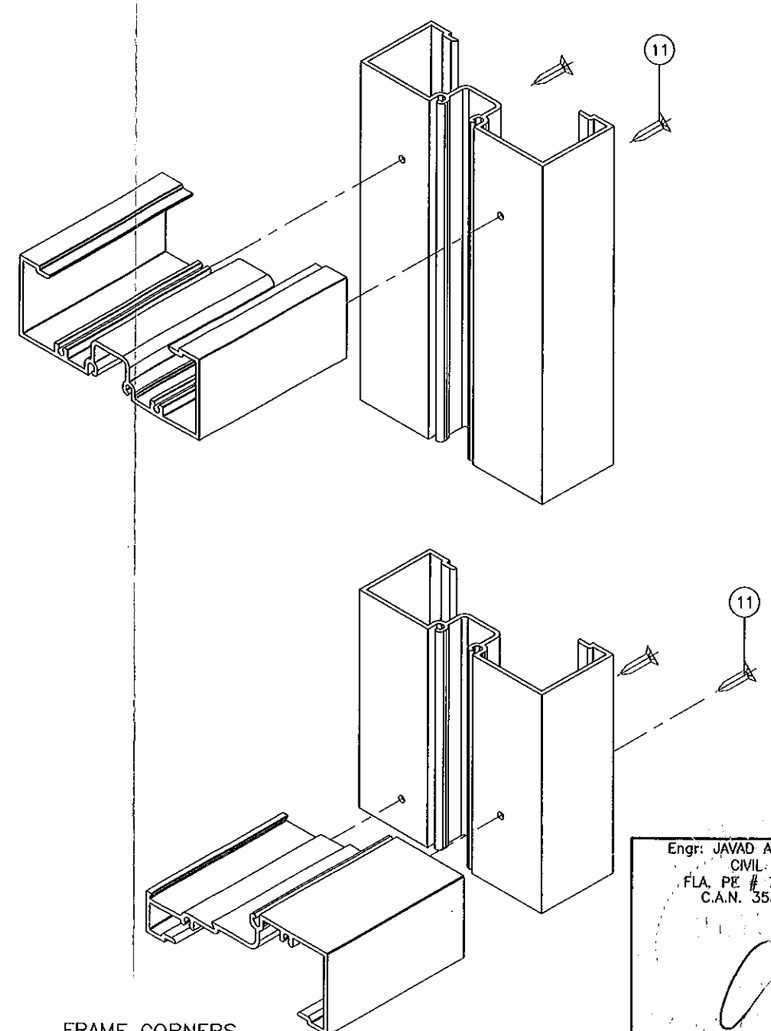

FRAME CORNERS

Engr: JAVAD AHMAD
CIVIL
FLA. PE # 70592
C.A.N. 3538

SEP 21 2011

Approved as complying with the Florida Building Code
Date 10/06/2011
NOA# 11-0720.08
Miami Dade Product Control
By

AL-FAROOQ CORPORATION
ENGINEERS & PRODUCT DEVELOPMENT
1235 S.W. 87 AVE
MIAMI, FLORIDA 33174
TEL. (305) 264-8100 FAX. (305) 262-6978

COMP-ANL\W10-75MRG

MG-4500 ALUMINUM FLUSH GLAZED SYSTEM (N.I.)

MR. GLASS DOORS & WINDOWS INC.
7440 N.W. 66 STREET
MIAMI, FL. 33166
TEL. (305) 470-8284 FAX. (305) 470-8285

revisions:

no	date	by	description
A	09.14.11		REV. PER BNC COMMENTS

date: 10-15-10
scale: 3/8" = 1"
dr. by: HAMID
chk. by:

drawing no.
W10-75