MIAMI-DADE COUNTY
BUILDING AND NEIGHBORHOOD COMPLIANCE DEPARTMENT (BNC)
BOARD AND CODE ADMINISTRATION DIVISION

MIAMI-DADE COUNTY
PRODUCT CONTROL SECTION
11805 SW 26 Street, Room 208
Miami, Florida 33175-2474
T (786) 315-2590 F (786) 315-2599
www.miamidade.gov/building

NOTICE OF ACCEPTANCE (NOA)

Reliable Products
1300 Enterprise Rd. (P.O. Box 580)
Geneva, AL 36340

SCOPE:

This NOA is being issued under the applicable rules and regulations governing the use of construction materials. The documentation submitted has been reviewed and accepted by Miami-Dade County BNC - Product Control Section to be used in Miami Dade County and other areas where allowed by the Authority Having Jurisdiction (AHJ).

This NOA shall not be valid after the expiration date stated below. The Miami-Dade County Product Control Section (In Miami Dade County) and/or the AHJ (in areas other than Miami Dade County) reserve the right to have this product or material tested for quality assurance purposes. If this product or material fails to perform in the accepted manner, the manufacturer will incur the expense of such testing and the AHJ may immediately revoke, modify, or suspend the use of such product or material within their jurisdiction. BNC reserves the right to revoke this acceptance, if it is determined by Miami-Dade County Product Control Section that this product or material fails to meet the requirements of the applicable building code.

This product is approved as described herein, and has been designed to comply with the Florida Building Code, including the High Velocity Hurricane Zone.

DESCRIPTION: Model AEL-42D-7060 Aluminum Louver

APPROVAL DOCUMENT: Drawing No. **03S358-1N** to **3N**, titled "Dade County Universal Louver for PTAC Application", sheets 1 through 3 of 3, prepared by Reliable Products, dated 12/23/03, with last revision dated 09/01/05, signed and sealed by Edward P. Hutson, P.E., bearing the Miami-Dade County Product Control renewal stamp with the Notice of Acceptance number and expiration date by the Miami-Dade County Product Control Section.

MISSILE IMPACT RATING: Large and Small Missile Impact Resistant

LABELING: Each unit shall bear a permanent label with the manufacturer's name or logo, city, state and following statement: "Miami-Dade County Product Control Approved", unless otherwise noted herein.

RENEWAL of this NOA shall be considered after a renewal application has been filed and there has been no change in the applicable building code negatively affecting the performance of this product.

TERMINATION of this NOA will occur after the expiration date or if there has been a revision or change in the materials, use, and/or manufacture of the product or process. Misuse of this NOA as an endorsement of any product, for sales, advertising or any other purposes shall automatically terminate this NOA. Failure to comply with any section of this NOA shall be cause for termination and removal of NOA.

ADVERTISEMENT: The NOA number preceded by the words Miami-Dade County, Florida, and followed by the expiration date may be displayed in advertising literature. If any portion of the NOA is displayed, then it shall be done in its entirety.

INSPECTION: A copy of this entire NOA shall be provided to the user by the manufacturer or its distributors and shall be available for inspection at the job site at the request of the Building Official.

This NOA **renews NOA # 05-0412.01** and consists of this page 1 and evidence page E-1, as well as approval document mentioned above.

The submitted documentation was reviewed by **Carlos M. Utrera, P.E.**

MIAMI-DADE COUNTY APPROVED

09/12/11

NOA No. 11-0726.03
Expiration Date: September 22, 2016
Approval Date: September 22, 2011

NOTICE OF ACCEPTANCE: EVIDENCE SUBMITTED

A. DRAWINGS

1. Drawing No. **03S358-1N** to **3N**, titled "Dade County Universal Louver for PTAC Application", sheets 1 through 3 of 3, prepared by Reliable Products, dated 12/23/03, with last revision dated 09/01/05, signed and sealed by Edward P. Hutson, Jr., P.E.

B. TESTS *"Submitted under NOA # 05-0412.01"*

1. Test report on Large Missile Impact Test per TAS 201, Test, Cyclic Wind Pressure Test per TAS 203, Test and Uniform Static Air Pressure Test per TAS 202 of "AEL-420-7060 Aluminum Louvers", prepared by Fenestration Testing Laboratory, Inc, laboratory No **4439**, dated 01/07/05, signed and sealed by E. J. Largaespada, P.E.
2. Clarification letter issued by Fenestration Testing Laboratory, Inc, on 09/08/05, signed by R. Robleto.
3. Test report on Tensile Test per ASTM B5577 of Aluminum Flat Reduced Section, prepared by Fenestration Testing Laboratory, Inc on 03/14/05, signed and sealed by E. J. Largaespada, P.E.

C. CALCULATIONS *"Submitted under NOA # 05-0412.01"*

1. Anchor Calculations prepared by Ruskin Engineering, pages 1 to 8, signed and sealed by Edward P. Hutson, Jr., P.E. on 07/01/05.

D. QUALITY ASSURANCE

1. Miami-Dade Building and Neighborhood Compliance Department (BNC)

E. MATERIAL CERTIFICATIONS

1. None.

F. STATEMENTS

1. Statement letter of code conformance to FBC 2007, issued by Ruskin Architectural Products, dated 07/20/11, signed and sealed by Daniel J. Rau, P.E.

   "Submitted under NOA # 05-0412.01"

2. Test compliance letter issued by Fenestration Testing Laboratory Inc, on 09/27/05, signed by E. J. Largaespada, P.E.
3. No interest letter issued by Norton & Schmidt on 08/01/05, signed and sealed by Edward P. Hutson, Jr., PE.

09/12/11

Carlos M. Utrera, P.E.
Product Control Examiner
NOA No. 11-0726.03
Expiration Date: September 22, 2016
Approval Date: September 22, 2011

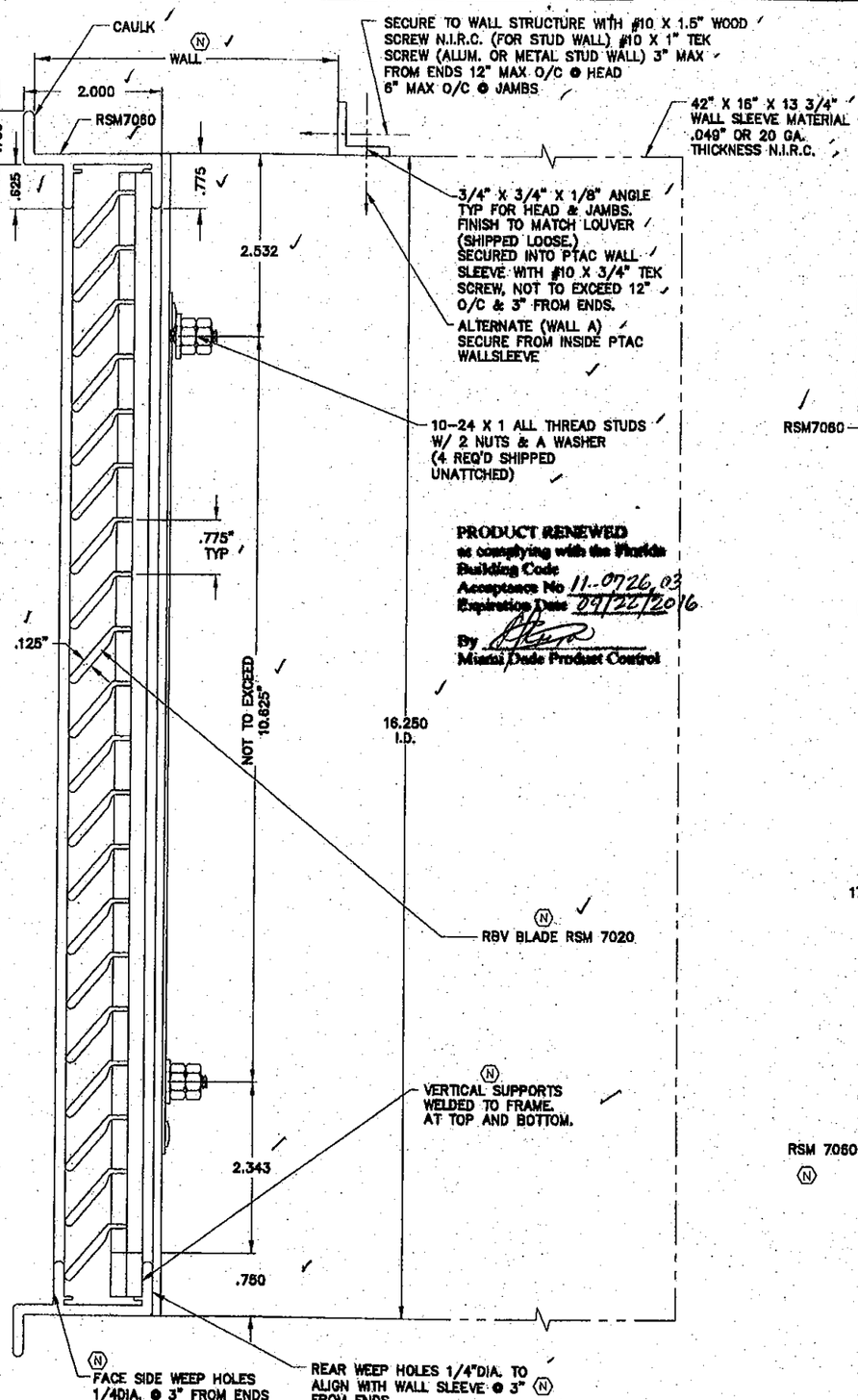

PRODUCT RENEWED
as complying with the Florida Building Code
Acceptance No 11-0726.03
Expiration Date 09/22/2016
By
Miami Dade Product Control

1 END VIEW
NTS

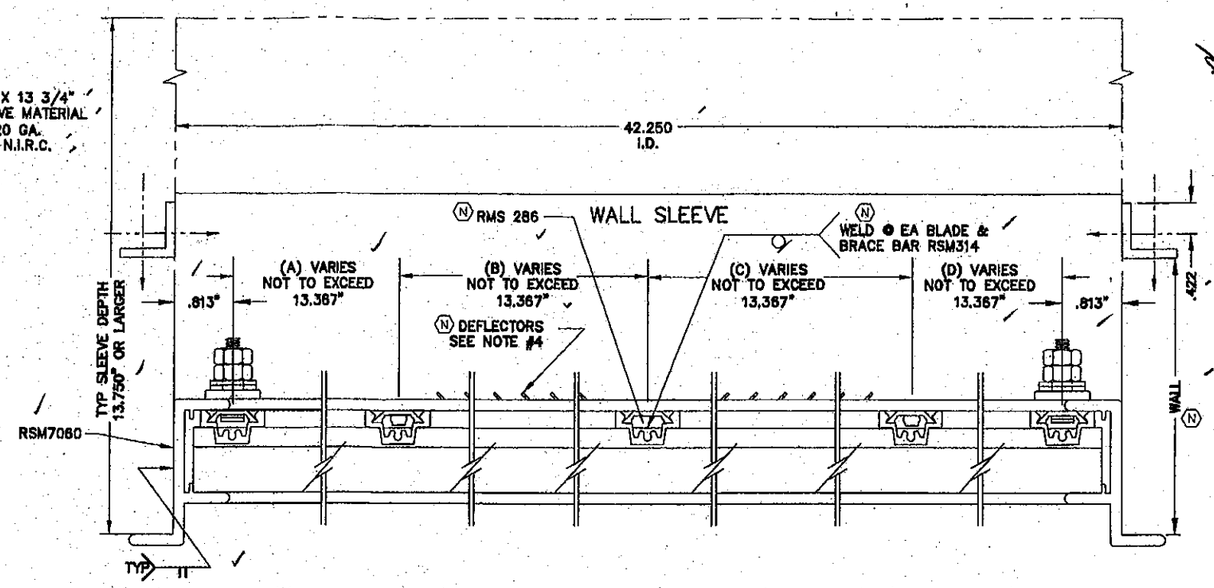

2 PLAN VIEW
NTS

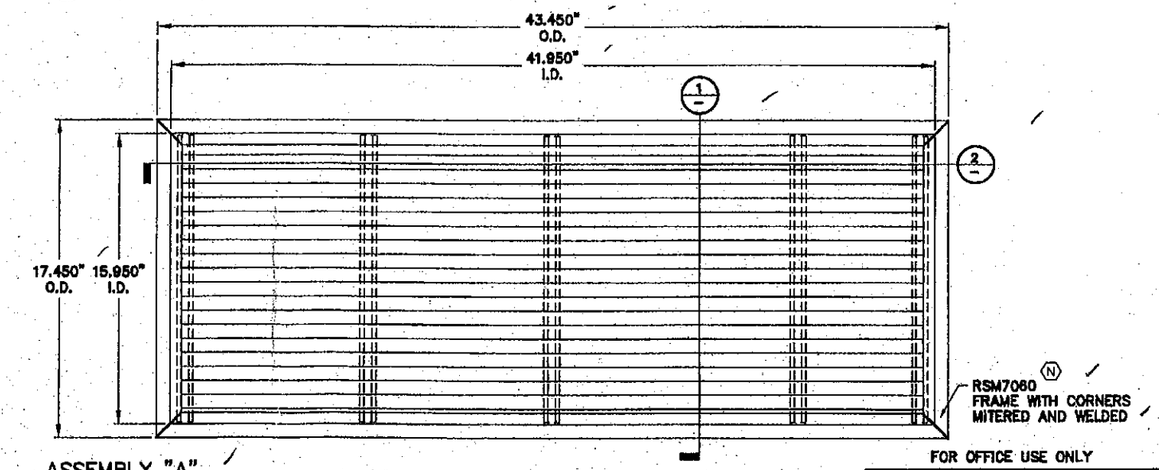

ASSEMBLY "A"
SCALE: 1" = 1"

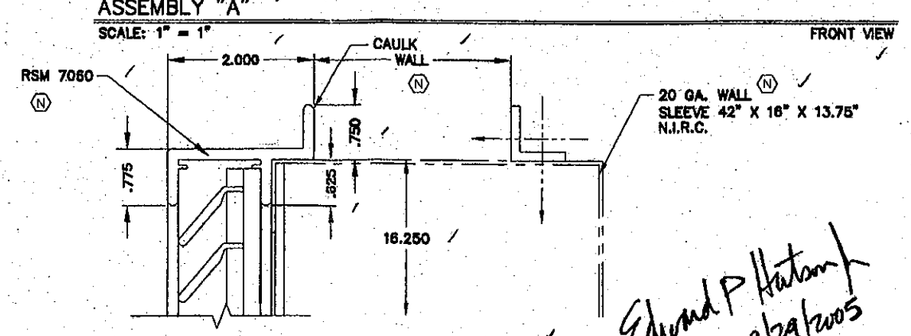

3 ALTERNATE FRAME POSITION DETAIL
NTS
SILL & JAMBS SIMILAR

Edward P Hutson Jr
9/29/2005

REV.	DESCRIPTION	DWN BY	CHK'D BY	DATE
N	REVISED NOTES	J.R.C.	WS	9/1/05
M	ADDED ALTERNATE FRAME POSITION, CORRECTED BAFFLE	T.R.K.	WS	12/15/04
L	MOVED WELD SYM. TO PLAN VIEW, CHANGE DIM. END VIEW	GR	WS	08/31/04
K	REV. NOTES ADDED MATERIAL THICKNESS DIM. MODEL NAME CHANGE	GR	WS	08/05/04
J	REV. FRAME TO RSM7060A	GR	CS	06/14/04
H	REV. MOUNTING SCEW I.D. FOR METAL OR WOOD STUD	GR	CS	05/12/04
G	REV. FRAME, REMOVED WINDOW WALL TREATMENT, ADDED DETAILS ON SHEET 3	NNM	WS	04/26/04
F	REV. DIRECTION OF FRAME TO MOUNT IN TO W/ SAME DIRECTION OF FRAMES ON SHEET 1 & 2	NNM	WS	03/30/04
E	REV. NOTES & ADDED MOUNTING DIRECTIONS ON VIEWS ON SHEET 1	NNM	WS	03/04/04
D	ADDED NOTES & REV. NOTES & DETAILS	NNM	WS	02/26/04
C	REMOVED SHEET 28, REVISED DETAILS AND ADDED PTAC SLEEVE	NNM	WS	02/09/04

RELIABLE PRODUCTS

1300 Enterprise Road
Geneva, Alabama 36340
PHONE (334) 684-3621
FAX (334) 684-3120

ARCH/MECH LOUVERS
REGISTERS
GRILLES
DIFFUSERS

I THE UNDERSIGNED AM THE RESPONSIBLE INDIVIDUAL FOR VERIFYING CONDITIONS AND ROUGH OPENING MEASUREMENTS OF THIS CONTRACT.

BY MY SIGNATURE BELOW I DENOTE THAT I HAVE VERIFIED ALL FIELD CONDITIONS AND GUARANTEE THE ROUGH OPENING SIZES AND AUTHORIZE THE FABRICATION OF THE COMPONENTS CONTAINED IN ALL THE DOCUMENTS RELATIVE TO THIS PURCHASE ORDER.

NAME

AUTHORIZED SIGNATURE DATE

NAME OF ORGANIZATION

CUSTOMER NAME

FOR OFFICE USE ONLY

Approved as complying with the Florida Building Code
Date 02/16/05
NOA# 05-0412.01
Miami Dade Product Control Division
By

JOB NAME
DADE COUNTY UNIVERSAL LOUVER FOR PTAC APPLICATION

PO# DADE CO TEST
PROP# N/A
FINISH MILL.

SHEET TITLE
AEL-42D-7060
AEL-42 W/ FRM/LVR & ANGLE

DRAWN BY JULIE DAVIS		DATE 12/23/03	
REVIEWED BY WENDELL SIMMONS		DATE 12/23/03	
MANUFACTURING	REVIEW	DATE	
ENGINEER	REVIEW	DATE	
CUSTOMER REP. JIMMY HICKS	REVIEW	DATE	
DRAWING NUMBER 03S358-1N	SHEET 1	OF 3	

ENGINEER OF RECORD: EDWARD PAUL HUTSON JR.
ENGINEERING DISCIPLINE: STRUCTURAL ENGINEER
REGISTRATION #: STATE OF FLORIDA # 0052339

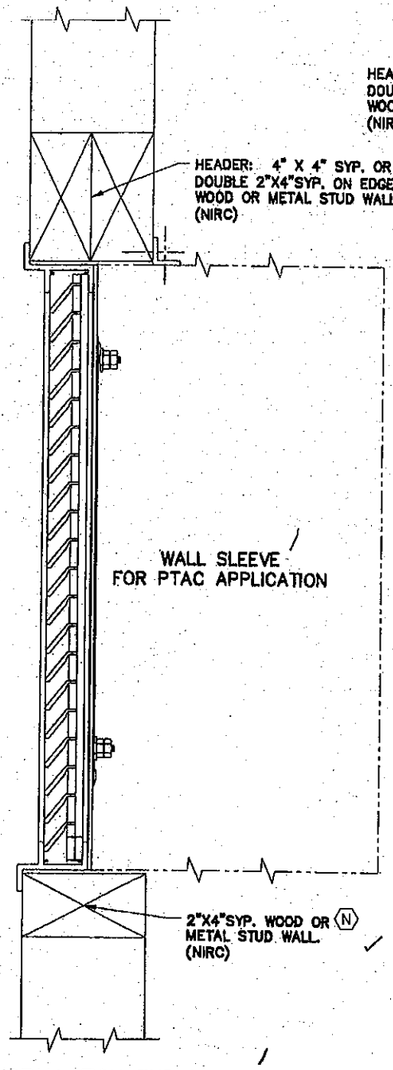

1/1 INSTALLATION END VIEW
NTS

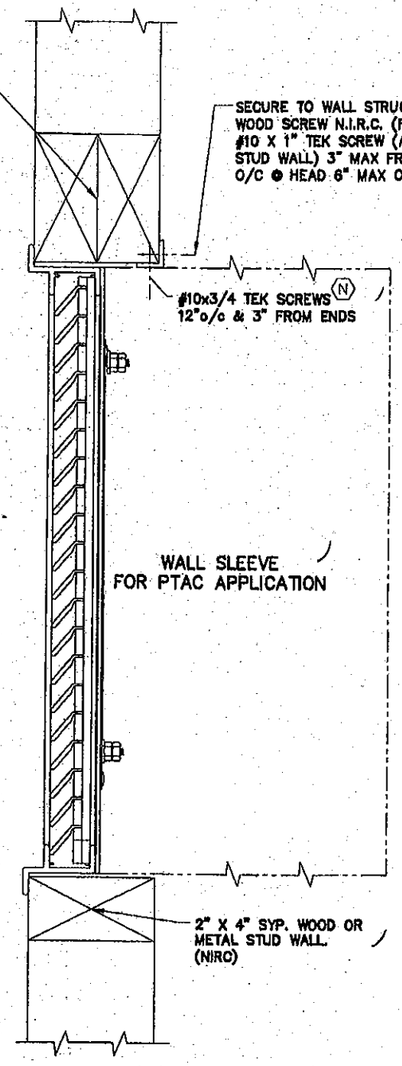

2/2 INSTALLATION END VIEW (ALT.)
NTS

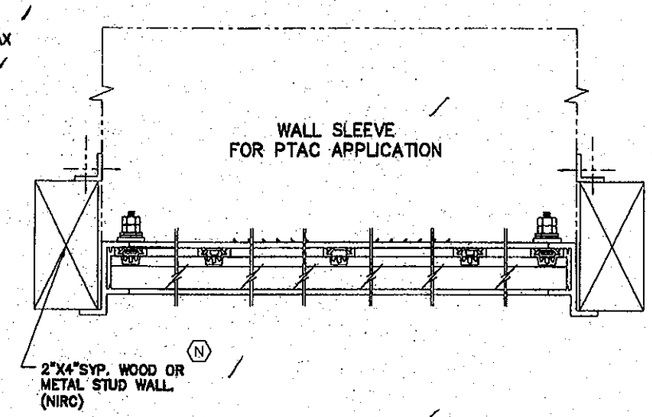

3/1 INSTALLATION SECTION DETAIL
NTS

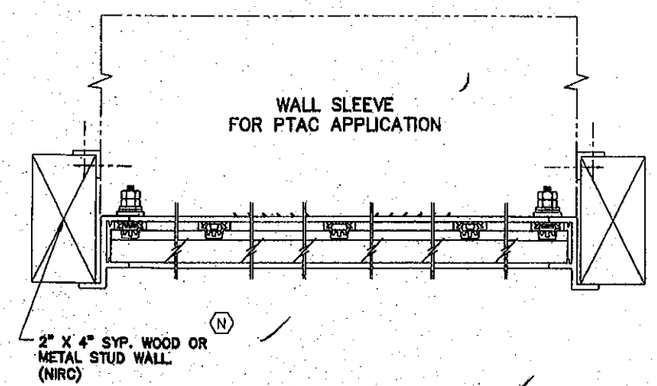

4/2 INSTALLATION SECTION DETAIL (ALT.)
NTS

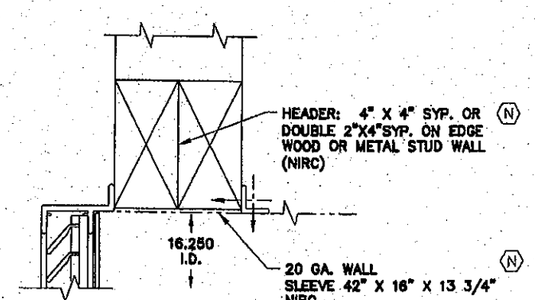

5/– INSTALLATION ALTERNATE FRAME POSITION DETAIL
NTS
SILL & JAMBS SIMILAR

PRODUCT RENEWED
as complying with the Florida Building Code
Acceptance No 11-0726.03
Expiration Date 09/22/2016
By
Miami Dade Product Control

FOR OFFICE USE ONLY

Approved as complying with the Florida Building Code
Date: 02/16/05
NOA# 03-0924.01
Miami Dade Product Control Division
By:

Edward P Hutson Jr
02/24/2005

REV.	DESCRIPTION	DATE	CHK'D BY	DWN BY
N	REVISED NOTES	9/01/05	WS	R.C.
M	ADDED ALTERNATE FRAME POSITION, CORRECTED BAFFLE	12/10/04	WS	T.R.K.
L	MOVED WELD SYM. TO PLAN VIEW, CHANGE DIM. END VIEW	08/31/04	WS	GR
K	REV. NOTES ADDED MATERIAL THICKNESS DIM	08/05/04	WS	GR
J	REV. FRAME TO RSM7060A	06/14/04	CS	GR
H	REV. STUD I.D. MOUNTING SCREW I.D. FOR METAL OR WOOD STUD	05/12/04	CS	GR
G	REV. FRAME, REMOVED WINDOW WALL TREATMENT, ADDED FRAME DETAILS ON SHEET 3	04/26/04	WS	NNM
F	REV. DIRECTION OF FRAME TO MOUNT IN TO W/ SAME DIRECTION OF FRAMES ON SHEET 1 & 2	03/30/04	WS	NNM
E	REV. NOTES & ADDED MOUNTING DIRECTIONS ON VIEWS ON SHEET 1	03/04/04	WS	NNM
D	ADDED NOTES & REV. NOTES & DETAILS	02/26/04	WS	NNM
C	REMOVED SHEET 2B, REVISED DETAILS AND ADDED PTAC CABINET	02/16/04	WS	NNM

RELIABLE PRODUCTS

1300 Enterprise Road
Geneva, Alabama 36340
PHONE (334) 684-3821
FAX (334) 684-3120

ARCH/MECH LOUVERS
REGISTERS
GRILLES
DIFFUSERS

I THE UNDERSIGNED AM THE RESPONSIBLE INDIVIDUAL FOR VERIFYING CONDITIONS AND ROUGH OPENING MEASUREMENTS OF THIS CONTRACT.

BY MY SIGNATURE BELOW I DENOTE THAT I HAVE VERIFIED ALL FIELD CONDITIONS AND GUARANTEE THE ROUGH OPENING SIZES AND AUTHORIZE THE FABRICATION OF THE COMPONENTS CONTAINED IN ALL THE DOCUMENTS RELATIVE TO THIS PURCHASE ORDER.

NAME

AUTHORIZED SIGNATURE DATE

NAME OF ORGANIZATION

CUSTOMER NAME

JOB NAME: DADE COUNTY UNIVERSAL LOUVER FOR PTAC APPLICATION

PO#: DADE CO TEST
PROP#: N/A
FINISH: MILL
SHEET TITLE: AEL-42D-7060 TYPICAL WALL APPLICATION

DRAWN BY: JULIE DAVIS		DATE: 12/23/03	
REVIEWED BY: WENDELL SIMMONS		DATE: 12/23/03	
MANUFACTURING	REVIEW	DATE	
ENGINEER OF RECORD: EDWARD PAUL HUTSON JR.	ENGINEER	REVIEW	DATE
ENGINEERING DISCIPLINE: STRUCTURAL ENGINEER	CUSTOMER REP.: JIMMY HICKS	REVIEW	DATE
REGISTRATION #: STATE OF FLORIDA # 0052339	DRAWING NUMBER: 03S358-2N	SHEET: 2	OF: 3

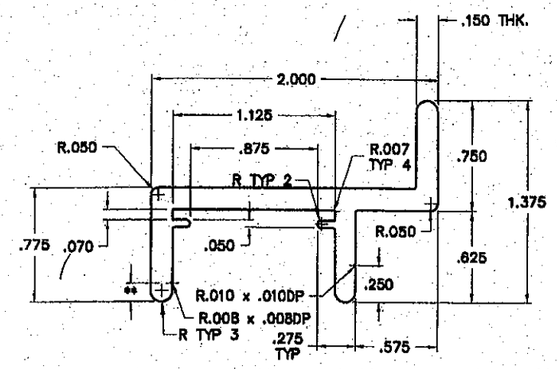

(N) 3/1 FRAME DETAIL -7060
NTS
SAMPLE PARTS
BUILD DIE & ORDER (10 PCS)
ALUM. AEL FRAME RSM7060

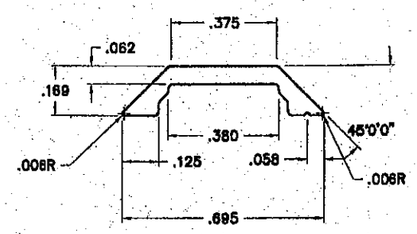

(N) ALUM SPLINE
RSM286

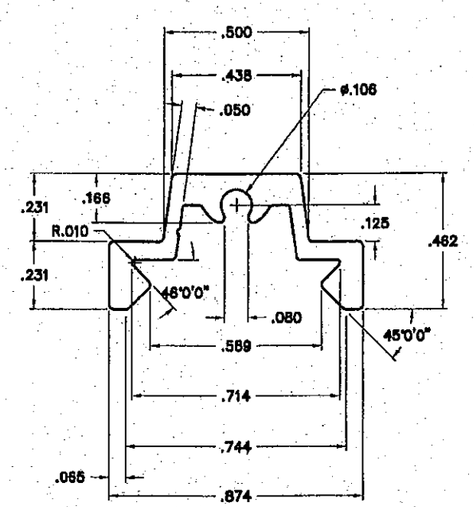

(N) ALUM BRACE BAR
RSM314

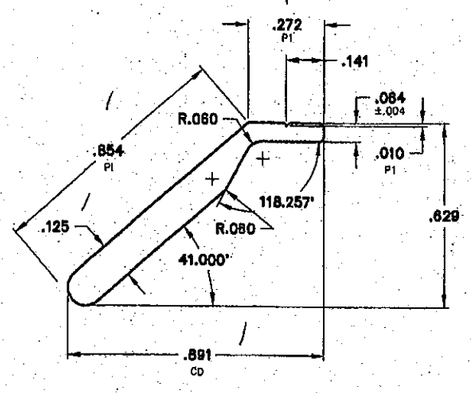

(N) ALUM RBV BLADE
RSM7020

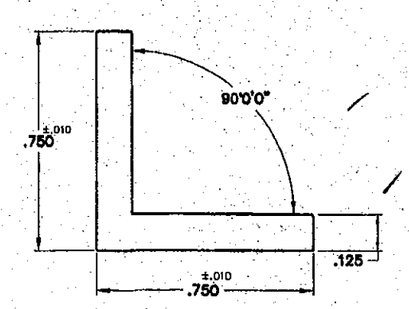

ALUMINUM ANGLE
A1185

BILL OF MATERIALS

MK.	QTY.	DESCRIPTION	HFA #	DWG #
	1	43.450 x 17.450 AEL-42D-7060		04S358
	2	RSM7060-192-AE 43.450 FRAME LENGTH	124832	RSM7060
	2	RSM7080-192-AE 17.450 FRAME LENGTH	124832	RSM7080
	20	RSM7020-192-AE 41.888 BLADE LENGTH	124114	RSM7020
	5	RSM314-192-AE PUNCHED .775 15.938 BRACE BAR LENGTH	131937	RSM314
	5	RSM286-192-AE 15.938 BRACE BAR SPLINE	130785	RSM286
	2	A-1185-192-AE 16.250 ANGLE LENGTH	131380	A-1185
	1	A-1185-192-AE 16.250 ANGLE LENGTH	131380	A-1185
	2	RSM-91-192-VE 16.250 MOUNTING BAR	137362	RSM91
	2	GE DEFLECTOR BAFFLE	430730	430730
	4	10-24 x 1 ALL THREADED STUD	430267	430267
	8	10-24 HEX NUTS	430170	430170
	6	#10 FL CUT SS 18-8 WASHER	430157	430157
	4	PRESTINCERT	430023	430023
	11	#10 X 3/4" HEX WHD ZINC TEK SCREW	431155	431155
	11	#10 X 1" HEX WHD ZINC TEK SCREW	430941	430941
	4	AK42H RIVET	430140	430140

(N) NOTE:

1) THESE LOUVERS ARE TO BE INSTALLED IN A LOCATION WHERE THE ROOM BEHIND THE LOUVERS IS DESIGNED TO DRAIN WATER PENETRATING INTO THE ROOM AND THE ROOM WILL HOUSEWATER RESISTANT/WATER PROOF EQUIPMENT COMPONENTS, OR SUPPLIES.

2) ALL COMPONENTS ARE ALUMINUM ALLOY 6063TS

3) DESIGNATED PRESSURE RATING
± 140 P.S.F.
LARGE & SMALL MISSLE IMPACT RESISTANCE

4) DEFLECTORS ARE TO DIRECT INTAKES & EXHAUST FOR P.T.A.C. INSTALLED IN WINDOW SLEEVE BEYOND. THEY HAVE NO EFFECT ON STRUCTURAL INTEGRITY OF THE LOUVER DESIGN.

PRODUCT RENEWED
as complying with the Florida Building Code
Acceptance No 11-0726.03
Expiration Date 07/22/2016
By
Miami-Dade Product Control

REV.	DESCRIPTION	DWN BY	CHK'D BY	DATE
N	REVISED NOTES & ADDED DETAILS	R.C.	WS	09/1/05
M	ADDED BOM	T.R.K.	WS	01/11/05
L	MOVED WELD SYM. TO PLAN VIEW, CHANGE DIM. END VIEW	GR	WS	08/31/04
K	MODEL NAME CHANGE REV. NOTES ADDED MATERIAL THICKNESS DIM.	GR	WS	08/05/04
J	REV. FRAME TO RSM7060A	GR	CS	05/14/04
H	REV. STUD I.D. MOUNTING SCREW I.D. FOR METAL OR WOOD STUD	GR	CS	05/12/04
G	REV. FRAME, REMOVED WINDOW WALL TREATMENT, ADDED FRAME DETAILS ON SHEET 3.	NNM	WS	04/26/04
F	REV. DIRECTION OF FRAME TO MOUNT IN TO W/ SAME DIRECTION OF FRAMES ON SHEET 1 & 2	NNM	WS	03/30/04
E	REV. NOTES & ADDED MOUNTING DIRECTIONS ON VIEWS ON SHEET 1	NNM	WS	03/04/04
D	ADDED NOTES & REV. NOTES & DETAILS	NNM	WS	02/26/04
C	REMOVED SHEET 2B, REVISED DETAILS AND ADDED PTAC CABINET	NNM	WS	02/16/04

RELIABLE
PRODUCTS

1300 Enterprise Road
Geneva, Alabama 36340
PHONE (334) 684-3621
FAX (334) 684-3120

ARCH/MECH LOUVERS
REGISTERS
GRILLES
DIFFUSERS

I THE UNDERSIGNED AM THE RESPONSIBLE INDIVIDUAL FOR VERIFYING CONDITIONS AND ROUGH OPENING MEASUREMENTS OF THIS CONTRACT.

BY MY SIGNATURE BELOW I DENOTE THAT I HAVE VERIFIED ALL FIELD CONDITIONS AND GUARANTEE THE ROUGH OPENING SIZES AND AUTHORIZE THE FABRICATION OF THE COMPONENTS CONTAINED IN ALL THE DOCUMENTS RELATIVE TO THIS PURCHASE ORDER.

NAME

AUTHORIZED SIGNATURE DATE

NAME OF ORGANIZATION

CUSTOMER NAME

FOR OFFICE USE ONLY

Approved as complying with the Florida Building Code
Date 02/10/06
NOA# 05-0412.01
Miami-Dade Product Control
Division:
By

JOB NAME
DADE COUNTY UNIVERSAL LOUVER FOR PTAC APPLICATION

PO# DADE CO TEST
PROP# N/A
FINISH MILL

SHEET TITLE
AEL-42D-7060
WINDOW WALL APPLICATION

DRAWN BY JULIE DAVIS		DATE 12/23/03
REVIEWED BY WENDELL SIMMONS		DATE 12/23/03
MANUFACTURING	REVIEW	DATE
ENGINEER	REVIEW	DATE
CUSTOMER REP. JIMMY HICKS	REVIEW	DATE
DRAWING NUMBER 03S358-3N	SHEET 3	OF 3

ENGINEER OF RECORD: EDWARD PAUL HUTSON JR.
ENGINEERING DISCIPLINE: STRUCTURAL ENGINEER
REGISTRATION #: STATE OF FLORIDA # 0052339

Edward P Hutson Jr
9/29/2005