MIAMI-DADE COUNTY
DEPARTMENT OF PERMITTING, ENVIRONMENT, AND REGULATORY AFFAIRS (PERA)

MIAMI-DADE COUNTY
PRODUCT CONTROL SECTION
11805 SW 26 Street, Room 208
Miami, Florida 33175-2474
T (786) 315-2590 F (786) 315-2599
www.miamidade.gov/pera/

NOTICE OF ACCEPTANCE (NOA)

Greenheck Fan Corporation
P.O. Box 410
Schofield, WI 54476

SCOPE:

This NOA is being issued under the applicable rules and regulations governing the use of construction materials. The documentation submitted has been reviewed and accepted by Miami-Dade County PERA - Product Control Section to be used in Miami Dade County and other areas where allowed by the Authority Having Jurisdiction (AHJ).

This NOA shall not be valid after the expiration date stated below. The Miami-Dade County Product Control Section (In Miami Dade County) and/or the AHJ (in areas other than Miami Dade County) reserve the right to have this product or material tested for quality assurance purposes. If this product or material fails to perform in the accepted manner, the manufacturer will incur the expense of such testing and the AHJ may immediately revoke, modify, or suspend the use of such product or material within their jurisdiction. PERA reserves the right to revoke this acceptance, if it is determined by Miami-Dade County Product Control Section that this product or material fails to meet the requirements of the applicable building code.

This product is approved as described herein, and has been designed to comply with the Florida Building Code, including the High Velocity Hurricane Zone.

DESCRIPTION: Model Cue, Cube, G and GB Aluminum Rooftop Fans

APPROVAL DOCUMENT: Drawing No. **HSA3001** to **HSA3007**, titled "Cue/Cube and G/GB-060-300", Sheets 1 through 7 of 7, dated 04/02, 05/26, 05/27 and 05/29/2009, with revision 1 dated 05/19/2011 and 05/25/2011, prepared by Greenheck Fan Corporation, signed and sealed by L. David Rice, P.E., bearing the Miami-Dade County Product Control revision stamp with the Notice of Acceptance number and approval date by the Miami-Dade County Product Control Section.

MISSILE IMPACT RATING: Large and Small Missile Impact Resistant

LABELING: Each unit shall bear a permanent label with the manufacturer's name or logo, city, state and following statement: "Miami-Dade County Product Control Approved", unless otherwise noted herein.

RENEWAL of this NOA shall be considered after a renewal application has been filed and there has been no change in the applicable building code negatively affecting the performance of this product.

TERMINATION of this NOA will occur after the expiration date or if there has been a revision or change in the materials, use, and/or manufacture of the product or process. Misuse of this NOA as an endorsement of any product, for sales, advertising or any other purposes shall automatically terminate this NOA. Failure to comply with any section of this NOA shall be cause for termination and removal of NOA.

ADVERTISEMENT: The NOA number preceded by the words Miami-Dade County, Florida, and followed by the expiration date may be displayed in advertising literature. If any portion of the NOA is displayed, then it shall be done in its entirety.

INSPECTION: A copy of this entire NOA shall be provided to the user by the manufacturer or its distributors and shall be available for inspection at the job site at the request of the Building Official.

This NOA **revises NOA # 09-0624.09** and consists of this page 1 and evidence page E-1, as well as approval document mentioned above.

The submitted documentation was reviewed by **Carlos M. Utrera, P.E.**

MIAMI-DADE COUNTY APPROVED

10/20/2011

NOA No. 11-0802.07
Expiration Date: September 23, 2014
Approval Date: October 27, 2011

NOTICE OF ACCEPTANCE: EVIDENCE SUBMITTED

A. DRAWINGS

1. Drawing No. **HSA3001** to **HSA3007**, titled "Cue/Cube and G/GB-060-300", Sheets 1 through 7 of 7, dated 04/02, 05/26, 05/27 and 05/29/2009, with revision 1 dated 05/19/2011 and 05/25/2011, prepared by Greenheck Fan Corporation, signed and sealed by L. David Rice, P.E.

B. TESTS *"Submitted under NOA # 09-0624.09"*

1. Test report on 1) Uniform Static Air Pressure Test per FBC, TAS 202-94
   2) Large Missile Impact Test per FBC, TAS 201-94,
   3) Cyclic Wind Pressure Test per FBC, TAS 203-94,
   along with marked-up drawings and installation diagram of Model Cube-300 Belt Drive Rooftop Ventilating Fans, prepared by Architectural Testing, Inc., Test Report No. **88029.01-602-18**, dated 02/04/09, signed and sealed by Joseph A. Reed, P.E.
2. Test report on 1) Uniform Static Air Pressure Test per FBC, TAS 202-94
   2) Large Missile Impact Test per FBC, TAS 201-94,
   3) Cyclic Wind Pressure Test per FBC, TAS 203-94,
   along with marked-up drawings and installation diagram of Model GB-300 Belt Drive Rooftop Ventilating Fans, prepared by Architectural Testing, Inc., Test Report No. **88799.01-602-18**, dated 04/06/09, signed and sealed by Joseph A. Reed, P.E.

C. CALCULATIONS *"Submitted under NOA # 09-0624.09"*

1. Anchor verification calculations, prepared by Rice Engineering, dated 06/12/09, signed and sealed by L. David Rice, P.E.

D. QUALITY ASSURANCE

1. Miami-Dade Department of Permitting, Environment, and Regulatory Affairs (PERA)

E. MATERIAL CERTIFICATIONS

1. None.

F. STATEMENTS

1. Statement letter of code compliance with 2007 FBC, issued by Rice Engineering, dated 09/19/2011, signed and sealed by L. David Rice, P.E.
2. No financial interest letter issued by Rice Engineering, dated 06/12/09, signed and sealed by L. David Rice, P.E.

10/20/2011

Carlos M. Utrera, P.E.
Product Control Examiner
NOA No. 11-0802.07
Expiration Date: September 23, 2014
Approval Date: October 27, 2011

MODEL	FASTENER G		FASTENER H		FASTENER J		FASTENER K	
	QTY.	DESCRIPTION	QTY.	DESCRIPTION	QTY.	DESCRIPTION	QTY.	DESCRIPTION
CUE-060-065-070-075-080 085-090-095-098-099-101 121-131-141-161/HP	16 EA.	TCS ¼-20 X ¾ DACROMET COATED	4	RIVET, ¼ X 5/16 SEMI TUBULAR 5052 ALUM.	4	SCREW, ¼-20 X ⅝ 18-8/SS	4	PAL NUT, ¼-20 SPRING STEEL
CUE-180/HP-200	24 EA.		6					
CUBE-098-099-101/HP-121 131-141/HP-161/HP/XP	16 EA.		4					
CUBE-180/HP-200/HP-220/HP 240/HP/XP-300/HP/XP	24 EA.		6					
S-CUBE-101/HP-121-131 141/HP-161/HP	16 EA.		4					
S-CUBE-200-240-300	24 EA.		6					

DESIGN LIMITS	
Max: Wind Velocity:	150 mph (67 m/s)
Max: Desigh Load:	±75 psf (3.6 Kpa)
Max: Overall Enclosure Dia.	48.31 in. (1227 mm)
Max: Overall Unit Height:	44.50 in. (1130 mm)

REVISION	DCR	BY	DATE	SYM
CREATE DWG.		DFY	06/03 2009	0
ADDED CUE/CUBE-099		SPI	05/19 2011	1

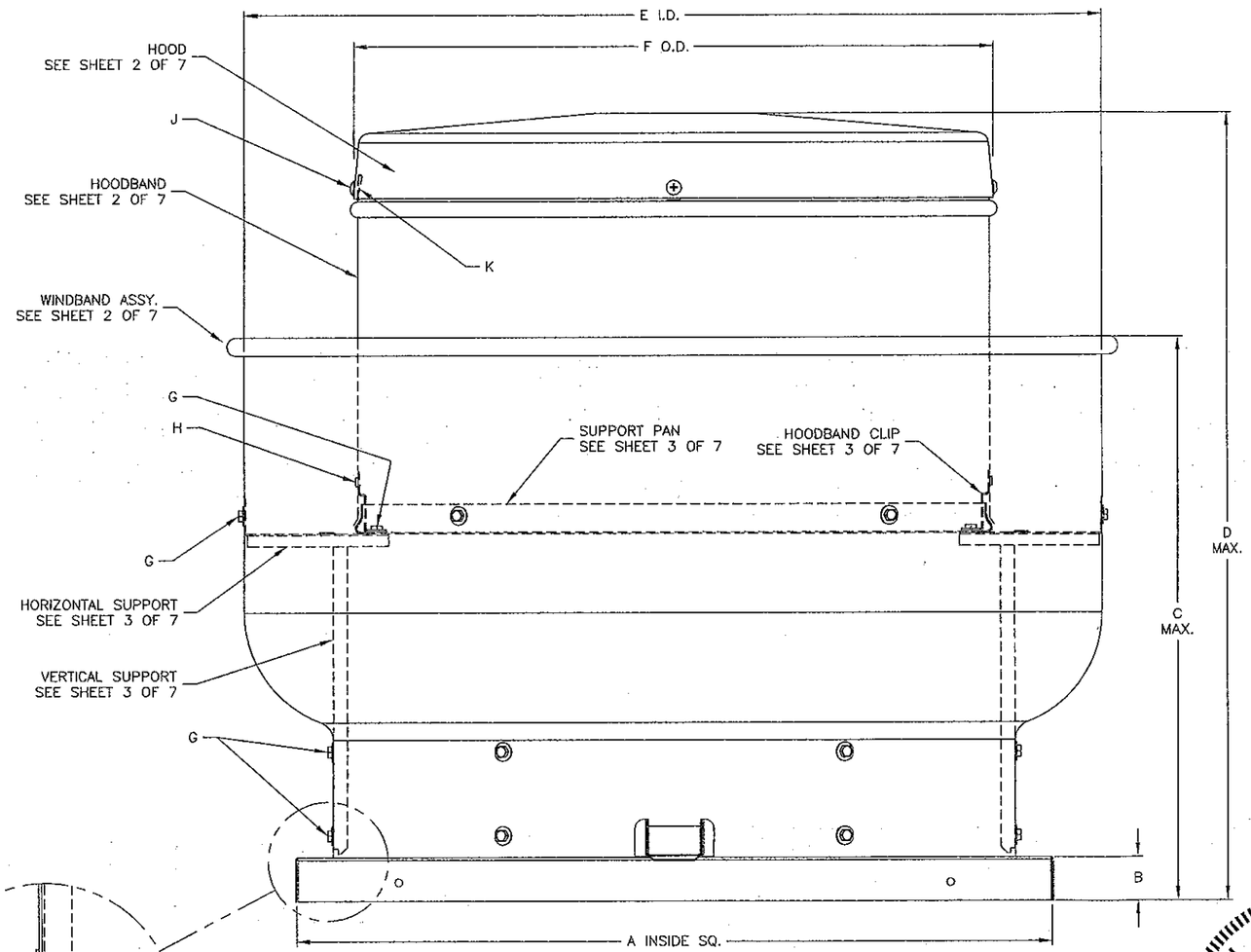

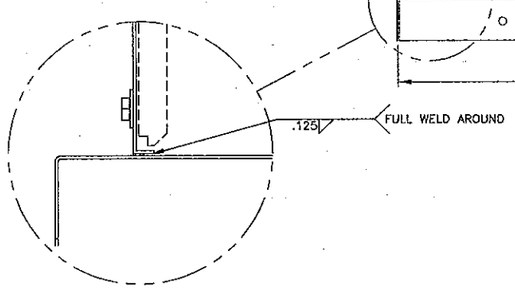

WINDBAND TO CURB CAP CONNECTION
TYP. ALL MODELS

ALL DIMENSIONS ARE IN INCHES

MODEL	A	B	C	D	E	F	WEIGHT LBS.
CUE-060	17.00	1.75	13.13	15.41	18.38	12.63	29
CUE-065	17.00	1.75	13.13	15.41	18.38	12.63	29
CUE-070	17.00	1.75	13.13	15.41	18.38	12.63	29
CUE-075	17.00	1.75	13.13	15.41	18.38	12.63	29
CUE-080	19.00	1.75	13.13	15.37	21.00	14.38	40
CUE-085	19.00	1.75	13.13	15.37	21.00	14.38	40
CUE-090	19.00	1.75	13.13	15.37	21.00	14.38	40
CUE-095	19.00	1.75	15.19	17.31	21.00	14.38	40
CUE-098	19.00	1.75	19.50	27.00	23.63	14.38	53
CUE-099	19.00	1.75	19.50	27.00	23.63	14.38	53
CUE-101	19.00	1.75	19.50	27.00	23.63	18.63	53
CUE-121	19.00	1.75	19.50	27.00	23.63	18.63	64
CUE-131	19.00	1.75	19.50	27.00	23.63	18.63	64
CUE-141/HP	22.00	1.75	20.35	32.20	27.70	21.00	90
CUE-161/HP	22.00	1.75	20.35	32.20	27.70	21.00	90
CUE-180/HP	30.00	1.75	22.72	31.57	34.20	25.20	142
CUE-200	30.00	1.75	22.72	31.57	34.20	25.20	142
CUBE-098	19.00	1.75	19.50	27.00	23.63	18.63	58
CUBE-099	19.00	1.75	19.50	27.00	23.63	18.63	58
CUBE-101/HP	19.00	1.75	19.50	27.00	23.63	18.63	58
CUBE-121	19.00	1.75	19.50	27.00	23.63	18.63	66
CUBE-131	19.00	1.75	19.50	27.00	23.63	18.63	66
CUBE-141/HP	22.00	1.75	20.35	32.20	27.70	21.00	84
CUBE-161/HP/XP	22.00	1.75	20.35	32.20	27.70	21.00	87
CUBE-180/HP	30.00	1.75	22.72	33.75	34.20	25.20	126
CUBE-200/HP	30.00	1.75	22.72	33.75	34.20	25.20	142
CUBE-220/HP	34.00	1.75	27.25	40.00	40.90	29.20	174
CUBE-240/HP/XP	34.00	1.75	27.25	40.00	40.90	29.20	175
CUBE-300/HP/XP	40.00	1.75	30.84	44.50	48.31	36.02	313
S-CUBE-101/HP	19.00	1.75	19.50	27.00	23.63	18.63	58
S-CUBE-121	19.00	1.75	19.50	27.00	23.63	18.63	66
S-CUBE-131	19.00	1.75	19.50	27.00	23.63	18.63	66
S-CUBE-141/HP	22.00	1.75	20.35	32.20	27.70	21.00	84
S-CUBE-161/HP	22.00	1.75	20.35	32.20	27.70	21.00	87
S-CUBE-200	30.00	1.75	22.72	33.75	34.20	25.20	142
S-CUBE-240	34.00	1.75	27.25	40.00	40.90	29.20	175
S-CUBE-300	40.00	1.75	30.84	44.50	48.31	36.02	313

NOTES:

1. MODELS CUE, CUBE, AND HAVE BEEN SUCCESSFULLY TESTED IN ACCORDANCE WITH MAIAMI DADE TEST PROTOCOL TAS-201 (LARGE MISSILE IMPACT), TAS-203(CYCLIC WIND LOADING.) AND TAS-202 (STATIC LOADING).
2. ROOF STRUCTURE MUST BE DESIGNED TO WITHSTAND THE WEIGHT AND LOADING TRANSMITTED BY ROOF TOP FANS. FASTENERS SHALL BE AS SPECIFIED AND INSTALLED AS DETAILED.
3. DESIGN TESTING AND INSTALLATION CONFORMS TO AISC MANUAL OF STEEL CONSTRUCTION AND ALUMINUM DESIGN MANUAL.
4. FAN CURBS MUST BE ANCHORED TO ROOF FRAMING MEMBERS AND NOT TO THE ROOFING SYSTEM.
5. DESIGN, TESTING, AND INSTALLATION CONFORMS TO FLORIDA BUILDING CODE.
6. THIS APPROVAL IS FOR THE STRUCTURAL PERFORMANCE AND IMPACK RESISTANCE ONLY. INTERIOR MECHANISM AND/OR ELECTRICAL CIRCUITRY ARE OUTSIDE THE SCOPE OF THIS APPROVAL.
7. THIS PRODUCT HAS NOT BEEN TESTED FOR WATER PENETRATION ACCORDING TO FLORIDA BUILDING CODE, TAS 100(A), WIND DRIVEN RAIN TEST.

PRODUCT REVISED
as complying with the Florida
Building Code
Acceptance No 11-0802.07
Expiration Date 09/23/2014
By
Miami Dade Product Control

L. DAVID RICE
LICENSED
No. 50923
Exp. 2/28/2013
STATE OF
FLORIDA
PROFESSIONAL ENGINEER

July 14, 2011

RICE
ENGINEERING
105 School Creek Trail
Luxemburg, WI 54217
Phone: 920.845.1042
Fax: 920.845.1048
www.rice-inc.com

Florida Firm No: F-01000005061
Certificate of Authorization: #9090
L. David Rice
Registration No: 50923

GREENHECK
P.O.BOX 450 SCHOFIELD, WISCONSIN 54476-0450

TITLE
CUE/CUBE-060-300
SHEET 1 OF 7

DRAWN BY YAKLOVICH
DATE 04/02/2009
SCALE 1/3
CAD DRAWING NO. HSA3001

REVISION	DCR	BY	DATE	SYM
CREATE DWG.		DFY	06/03 2009	0
ADDED CUE/CUBE-099		SPI	05/19 2011	1

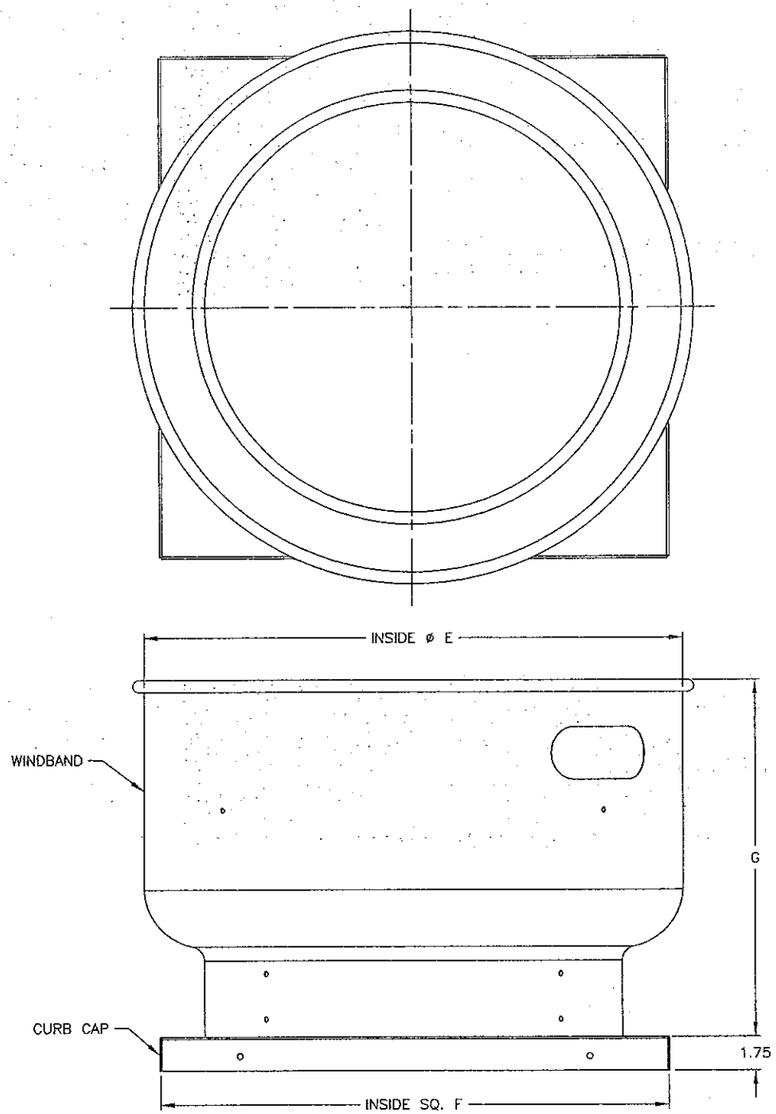

WINDBAND ASSY.
1 REQ'D. PER UNIT

MODEL	E	F	G	WINDBAND	CURB CAP
CUE-060-65-70-75	18.38	17.00	11.38	.051 ALUM. 1100-H12	.051 ALUM. 1100-H14
CUE-080-85-90	21.00	19.00	11.50	.051 ALUM. 1100-H12	.063 ALUM. 1100-H12
CUE-095	21.00	19.00	13.44	.051 ALUM. 1100-H12	.063 ALUM. 1100-H12
CUE-098-099-101-121-131	23.63	19.00	17.75	.051 ALUM. 1100-H12	.063 ALUM. 1100-H12
CUE-141/HP-161/HP	27.63	22.00	18.56	.051 ALUM. 1100-H12	.063 ALUM. 1100-H12
CUE-180/HP-200	34.13	30.00	20.97	.063 ALUM. 1100-H22	.063 ALUM. 1100-H14
CUBE-098-099-101/HP-121-131	23.63	19.00	17.75	.051 ALUM. 1100-H12	.063 ALUM. 1100-H12
CUBE-141/HP-161/HP/XP	27.63	22.00	17.75	.051 ALUM. 1100-H12	.063 ALUM. 1100-H12
CUBE-180/HP-200/HP	34.13	30.00	20.97	.063 ALUM. 1100-H22	.063 ALUM. 1100-H14
CUBE-220/HP-240/HP/XP	40.78	34.00	25.50	.063 ALUM. 1100-H22	.063 ALUM. 1100-H12
CUBE-300/HP/XP	48.16	40.00	29.09	.080 ALUM. 1100-H22	.063 ALUM. 1100-H12
S-CUBE-101/HP-121-131	23.63	19.00	17.75	.051 ALUM. 1100-H12	.063 ALUM. 1100-H12
S-CUBE-141/HP-161/HP	27.63	22.00	17.75	.051 ALUM. 1100-H12	.063 ALUM. 1100-H12
S-CUBE-200	34.13	30.00	20.97	.063 ALUM. 1100-H22	.063 ALUM. 1100-H14
S-CUBE-240	40.78	34.00	25.50	.063 ALUM. 1100-H22	.063 ALUM. 1100-H12
S-CUBE-300	48.16	40.00	29.09	.080 ALUM. 1100-H22	.063 ALUM. 1100-H12

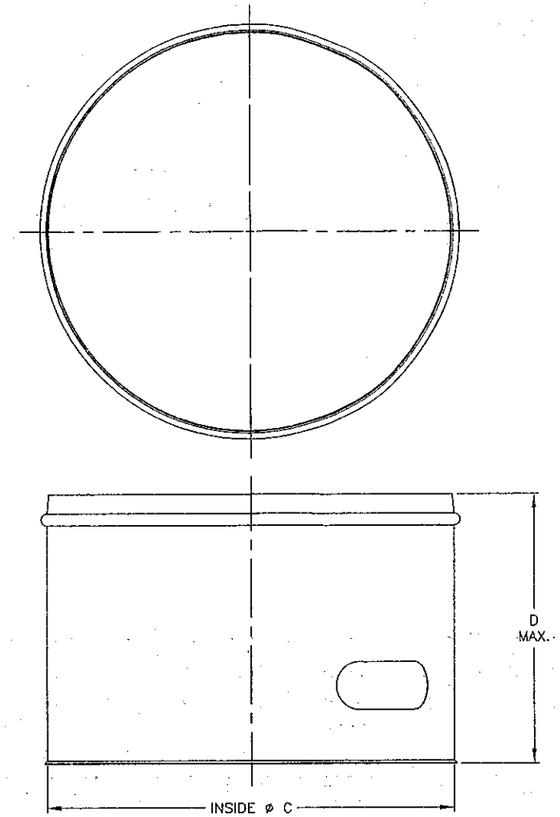

HOODBAND
1 REQ'D. PER UNIT

MODEL	C	D	HOOD
CUE-060-65-70-75	12.41	5.47	.040 ALUM. 1100-H14
CUE-080-85-90-95	14.29	5.47	.040 ALUM. 1100-H14
CUE-098-099-101-121-131	18.43	12.00	.040 ALUM. 1100-H14
CUE-141-161/HP	20.94	14.25	.040 ALUM. 1100-H14
CUE-180/HP-200	25.13	14.25	.040 ALUM. 1100-H14
CUBE-098-099-101/HP-121-131	18.43	12.00	.040 ALUM. 1100-H14
CUBE-141/HP-161/HP/XP	20.94	14.25	.040 ALUM. 1100-H14
CUBE-180/HP-200/HP	25.13	18.00	.040 ALUM. 1100-H14
CUBE-220/HP-240/HP/XP	28.81	18.00	.040 ALUM. 1100-H14
CUBE-300/HP/XP	35.94	23.50	.051 ALUM. 1100-H14
S-CUBE-101/HP-121-131	18.43	12.00	.040 ALUM. 1100-H14
S-CUBE-141/HP-161/HP	20.94	14.25	.040 ALUM. 1100-H14
S-CUBE-200	25.13	18.00	.040 ALUM. 1100-H14
S-CUBE-240	28.81	18.00	.040 ALUM. 1100-H14
S-CUBE-300	35.94	23.50	.051 ALUM. 1100-H14

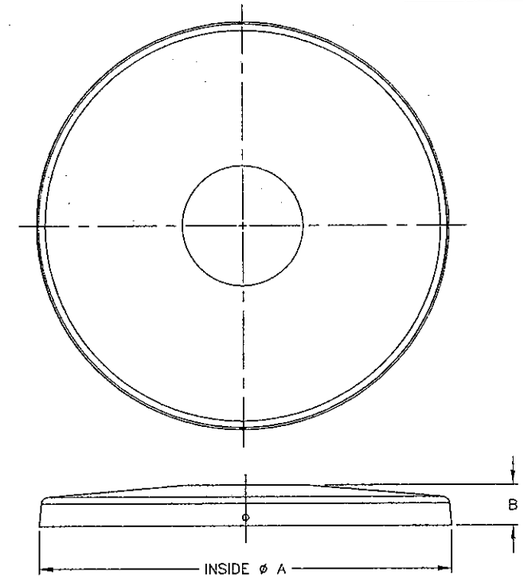

HOOD
1 REQ'D. PER UNIT

MODEL	A	B	HOOD
CUE-060-65-70-75	12.50	1.85	.051 ALUM. 1100-H12
CUE-080-85-90-95	14.38	1.94	.051 ALUM. 1100-H12
CUE-098-099-101-121-131	18.63	2.66	.040 ALUM. 1100-H14
CUE-141-161/HP	21.25	2.13	.040 ALUM. 1100-H14
CUE-180/HP-200	25.44	3.44	.040 ALUM. 1100-H14
CUBE-098-099-101/HP-121-131	18.63	2.66	.040 ALUM. 1100-H14
CUBE-141/HP-161/HP/XP	21.25	2.13	.040 ALUM. 1100-H14
CUBE-180/HP-200/HP	25.44	3.44	.040 ALUM. 1100-H14
CUBE-220/HP-240/HP/XP	29.13	3.09	.051 ALUM. 1100-H14
CUBE-300/HP/XP	36.25	3.81	.051 ALUM. 1100-H14
S-CUBE-101/HP-121-131	18.63	2.66	.040 ALUM. 1100-H14
S-CUBE-141/HP-161/HP	21.25	2.13	.040 ALUM. 1100-H14
S-CUBE-200	25.44	3.44	.040 ALUM. 1100-H14
S-CUBE-240	29.13	3.09	.051 ALUM. 1100-H14
S-CUBE-300	36.25	3.81	.051 ALUM. 1100-H14

L. DAVID RICE
LICENSED
No. 50923
Exp. 2/28/2013
STATE OF FLORIDA
PROFESSIONAL ENGINEER

July 14, 2011

PRODUCT REVISED
as complying with the Florida Building Code
Acceptance No. 11-0802.07
Expiration Date 07/23/2014
By
Miami Dade Product Control

RICE ENGINEERING
105 School Creek Trail
Luxemburg, WI 54217
Phone: 920.845.1042
Fax: 920.845.1048
www.rice-inc.com

Florida Firm No: F-01000005061
Certificate of Authorization: #9090
L. David Rice
Registration No: 50923

ALL DIMENSIONS ARE IN INCHES

GREENHECK
P.O. BOX 410 SCHOFIELD, WISCONSIN 54476-0410

DRAWN BY: YAKLOVICH
DATE: 05/26/2009
SCALE: 1/4
CUT DRAWING NO: HSA3002

TITLE: CUE/CUBE-060-300
SHEET 2 OF 7

REVISION	DCR	BY	DATE	SYM
CREATE DWG.		DFY	06/03 2009	0
ADDED CUE/CUBE-099		SPJ	05/19 2011	1

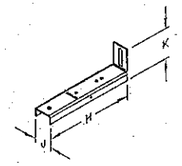

HORIZONTAL SUPPORT

MODEL	H	J	K	QTY.	HORIZONTAL SUPPORT
CUE-060-65-70-75	4.68	1.03	2.00	4	16 GA. GALV. G90
CUE-080-85-90-95	4.68	1.03	2.00	4	16 GA. GALV. G90
CUE-098-099-101-121-131	5.18	1.03	2.00	4	16 GA. GALV. G90
CUE-141-161/HP	4.68	1.03	2.00	4	16 GA. GALV. G90
CUE-180/HP-200	5.72	1.03	2.00	6	16 GA. GALV. G90
CUBE-098-099-101/HP-121-131	5.18	1.03	2.00	4	16 GA. GALV. G90
CUBE-141/HP-161/HP/XP	4.68	1.03	2.00	4	16 GA. GALV. G90
CUBE-180/HP-200/HP	5.72	1.03	2.00	6	16 GA. GALV. G90
CUBE-220/HP-240/HP/XP	7.25	1.03	2.00	6	16 GA. GALV. G90
CUBE-300/HP/XP	7.94	1.55	2.50	6	14 GA. GALV. G90
S-CUBE-101/HP-121-131	5.18	1.03	2.00	4	16 GA. GALV. G90
S-CUBE-141/HP-161/HP	4.68	1.03	2.00	4	16 GA. GALV. G90
S-CUBE-200	5.72	1.03	2.00	6	16 GA. GALV. G90
S-CUBE-240	7.25	1.03	2.00	6	16 GA. GALV. G90
S-CUBE-300	7.94	1.55	2.50	6	14 GA. GALV. G90

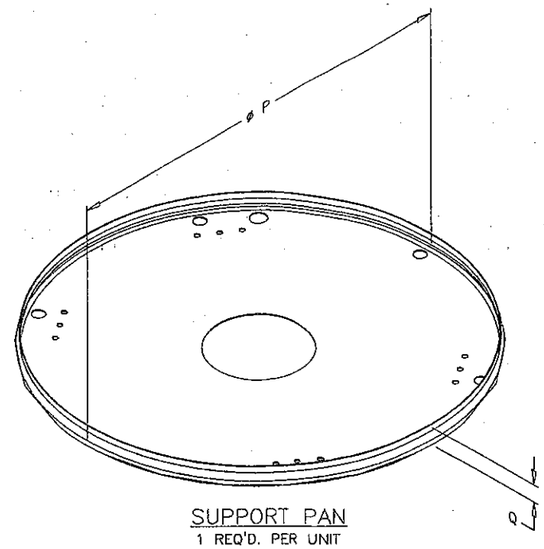

SUPPORT PAN

1 REQ'D. PER UNIT

MODEL	P	Q	SUPPORT PAN
CUE-060-65-70-75	12.31	1.75	18 GA. GALV G90
CUE-080-85-90-95	14.19	1.94	18 GA. GALV G90
CUE-098-099	18.38	3.94	18 GA. GALV G90
CUE-101	18.38	3.19	18 GA. GALV G90
CUE-121	18.38	4.94	18 GA. GALV G90
CUE-131	18.38	4.44	18 GA. GALV G90
CUE-141-161/HP	20.88	2.41	20 GA. GALV G90
CUE-180/HP-200	25.06	3.48	20 GA. GALV G90
CUBE-098-099-101/HP-121-131	18.38	2.75	18 GA. GALV G90
CUBE-141/HP-161/HP/XP	20.88	1.50	20 GA. GALV G90
CUBE-180/HP-200/HP	25.06	1.19	20 GA. GALV G90
CUBE-220/HP-240/HP/XP	28.75	1.19	18 GA. GALV G90
CUBE-300/HP/XP	35.88	1.19	16 GA. GALV G90
S-CUBE-101/HP-121-131	18.38	2.75	18 GA. GALV G90
S-CUBE-141/HP-161/HP	20.88	1.50	20 GA. GALV G90
S-CUBE-200	25.06	1.19	20 GA. GALV G90
S-CUBE-240	28.75	1.19	18 GA. GALV G90
S-CUBE-300	35.88	1.19	16 GA. GALV G90

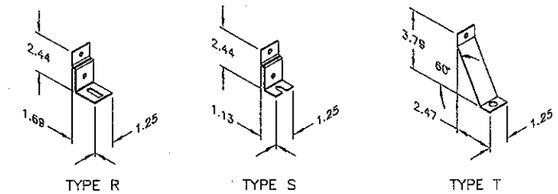

HOODBAND CLIPS

MODEL	TYPE	QTY.	HOODBAND CLIP
CUE-060-65-70-75	R	3	16 GA. GALV G90
CUE-080-85-90-95	R	3	16 GA. GALV G90
CUE-098-099-101-121-131	T	3	16 GA. GALV G90
CUE-141/HP-161/HP	R	4	16 GA. GALV G90
CUE-180/HP-200	S	6	16 GA. GALV G90
CUBE-098-099-101/HP-121-131	T	3	16 GA. GALV G90
CUBE-141/HP-161/HP/XP	R	4	16 GA. GALV G90
CUBE-180/HP-200/HP	S	6	16 GA. GALV G90
CUBE-220/HP-240/HP/XP	R	6	16 GA. GALV G90
CUBE-300/HP/XP	R	6	16 GA. GALV G90
S-CUBE-101/HP-121-131	R	3	16 GA. GALV G90
S-CUBE-141/HP-161/HP	R	4	16 GA. GALV G90
S-CUBE-200	S	6	16 GA. GALV G90
S-CUBE-240	R	6	16 GA. GALV G90
S-CUBE-300	R	6	16 GA. GALV G90

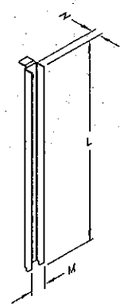

VERTICAL SUPPORT

MODEL	L	M	N	QTY.	VIRTICAL SUPPORT
CUE-060-65-70-75-080-085-090	6.69	0.93	0.56	4	16 GA. GALV. G90
CUE-095	8.63	0.93	0.56	4	16 GA. GALV. G90
CUE-098-099-101-121-131	9.47	0.93	0.56	4	16 GA. GALV. G90
CUE-141-161	10.88	0.93	0.56	4	16 GA. GALV. G90
CUE-161HP	7.44	0.93	0.56	4	16 GA. GALV. G90
CUE-180-200	12.78	0.93	0.56	6	16 GA. GALV. G90
CUE-180HP	10.88	0.93	0.56	6	16 GA. GALV. G90
CUBE-098-099-101/HP-121-131	9.47	0.93	0.56	4	16 GA. GALV. G90
CUBE-141/HP-161/HP	10.88	0.93	0.56	4	16 GA. GALV. G90
CUBE-161XP	8.63	0.93	0.56	4	16 GA. GALV. G90
CUBE-180/HP-200/HP	12.78	0.93	0.56	6	16 GA. GALV. G90
CUBE-220/HP-240/HP	17.60	0.93	0.56	6	16 GA. GALV. G90
CUBE-240XP	12.78	0.93	0.56	6	16 GA. GALV. G90
CUBE-300/HP	18.09	1.39	0.69	6	14 GA. GALV. G90
CUBE-300XP	13.13	1.39	0.69	6	14 GA. GALV. G90
S-CUBE-101/HP-121-131	9.47	0.93	0.56	4	16 GA. GALV. G90
S-CUBE-141/HP-161/HP	10.88	0.93	0.56	4	16 GA. GALV. G90
S-CUBE-200	12.78	0.93	0.56	6	16 GA. GALV. G90
S-CUBE-240	17.60	0.93	0.56	6	16 GA. GALV. G90
S-CUBE-300	18.09	1.39	0.69	6	14 GA. GALV. G90

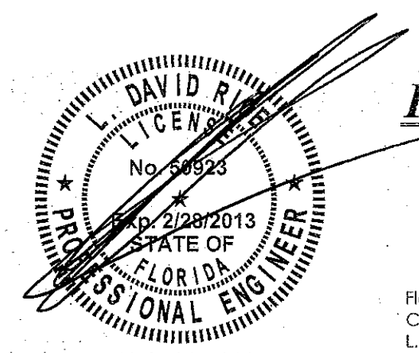

July 14, 2011

RICE ENGINEERING
105 School Creek Trail
Luxemburg, WI 54217
Phone: 920.845.1042
Fax: 920.845.1048
www.rice-inc.com

Florida Firm No: F-01000005061
Certificate of Authorization: #9090
L. David Rice
Registration No: 50923

PRODUCT REVIEWED
as complying with the Florida
Building Code
Acceptance No 11-0902.07
Expiration Date 09/23/2014
By
Miami Dade Product Control

ALL DIMENSIONS ARE IN INCHES

GREENHECK
5555 W. 4th SCHOFIELD, WISCONSIN 54476-0449

DRAWN BY YAKLOVICH
DATE 05/26/2009
SCALE 1/4
CAD DRAWING NO. HSA3003

TITLE
CUE/CUBE-060-300
SHEET 3 OF 7

MODEL	FASTENER J		FASTENER K		FASTENER L		FASTENER M		FASTENER N		FASTENER P	
	QTY.	DESCRIPTION	QTY.	DESCRIPTION	QTY.	DESCRIPTION	QTY.	DESCRIPTION	QTY.	DESCRIPTION	QTY.	DESCRIPTION
G-060-065-070-075-080-085-090-095-097-098-099	4	RIVET, 7/32 X 3/8 AL FH SLD	8	RIVET, 3/16 X 3/8 AL FH SLD	—	TCS 1/4-20 X 3/4 DACROMET COATED	4	TCS 1/4-20 X 1 DACROMET COATED	4	SCREW, 1/4-20 X 5/8 PTH 18-8 SS	—	SMS, #10 X 1/2 PTH 18-8 SS
G-101/HP-103/HP-121-123											4	
G-131-133-141/HP-143/HP	6		12		9		6		6		—	
G-150-160-163/HP-170											4	
G-180-183/HP-203												
GB-071-081-091-101/HP	4		8		6		4		4			
GB-121-131												
GB-141/HP-161/HP	6		12		9		6		6			
GB-180/HP-200/HP												
GB-220/HP-240/HP			12	TCS 1/4-20 X 3/4 DACROMET COATED								
GB-260-300/HP		TCS 1/4-20 X 3/4 DACROMET COATED										

DESIGN LIMITS	
Max: Wind Velocity:	150 mph (67 m/s)
Max: Design Load:	±75 psf (3.6 Kpa)
Max: Overall Enclosure Dia.	48.31 in. (1227 mm)
Max: Overall Unit Height:	44.50 in. (1130 mm)

REVISION	BCP	BY	DATE	SYM
CREATE DWG.		DFY	06/03/2009	0
ADDED G-097-098-099-103-123-133-143 163-183-203		SPJ	05/25/2011	1

ALL DIMENSIONS ARE IN INCHES

MODEL	A	B	C	D	E	F	G	H	WEIGHT LBS.
G-060	17.00	1.75	4.69	8.44	13.88	18.50	11.63	12.38	18
G-065	17.00	1.75	4.69	8.44	13.88	18.50	11.63	12.38	18
G-070	17.00	1.75	4.69	8.44	13.88	18.50	11.63	12.38	18
G-075	17.00	1.75	4.69	8.44	13.88	18.50	11.63	12.38	18
G-080	17.00	1.75	5.63	10.38	16.31	21.00	14.50	14.25	26
G-085	17.00	1.75	5.63	10.38	16.31	21.00	14.50	14.25	26
G-090	17.00	1.75	5.63	10.38	16.31	21.00	14.50	14.25	26
G-095	17.00	1.75	5.63	10.38	16.31	21.00	14.50	14.25	26
G-101	19.00	1.75	6.52	10.38	20.13	23.72	19.68	18.19	43
G-121	19.00	1.75	7.25	10.38	20.13	23.72	19.68	18.19	43
G-131	22.00	1.75	6.71	10.38	20.13	27.63	22.19	21.08	59
G-141	22.00	1.75	6.71	12.38	28.07	27.63	22.19	21.08	59
G-150	26.00	1.75	5.38	12.38	22.43	34.25	26.23	24.00	59
G-160	30.00	1.75	6.63	13.63	23.68	34.25	26.23	27.00	59
G-170	30.00	1.75	6.63	13.63	23.68	34.25	26.23	27.00	81
G-180	30.00	1.75	7.63	14.63	31.90	34.25	26.34	27.23	81
GB-071 : G-097	19.00	1.75	6.01	11.56	29.66	23.63	19.75	18.19	58
GB-081 : G-098	19.00	1.75	6.01	11.56	29.66	23.63	19.75	18.19	58
GB-091 : G-099	19.00	1.75	6.01	11.56	29.66	23.63	19.75	18.19	58
GB-101/HP : G-103/HP	19.00	1.75	6.01	11.56	29.66	23.63	19.75	18.19	63
GB-121 : G-123	19.00	1.75	6.01	11.56	29.66	23.63	19.75	18.19	66
GB-131 : G-133	19.00	1.75	6.01	11.63	29.66	27.63	19.75	18.19	67
GB-141/HP : G-143/HP	22.00	1.75	6.00	11.56	27.31	27.63	22.19	21.00	83
GB-161/HP : G-163/HP	22.00	1.75	6.00	11.56	27.31	27.63	22.19	21.00	89
GB-180/HP : G-183/HP	30.00	1.75	7.75	14.75	36.94	34.37	26.40	27.30	125
GB-200/HP : G-203	30.00	1.75	7.75	14.75	36.94	34.37	26.40	27.30	138
GB-220/HP	34.00	1.75	9.62	18.06	40.56	40.75	30.00	30.50	158
GB-240/HP	34.00	1.75	9.62	18.06	40.56	40.75	30.00	30.50	158
GB-260	40.00	1.75	11.64	19.77	45.16	46.20	35.94	36.00	305
GB-300/HP	40.00	1.75	11.64	19.77	45.16	46.20	35.94	36.00	320

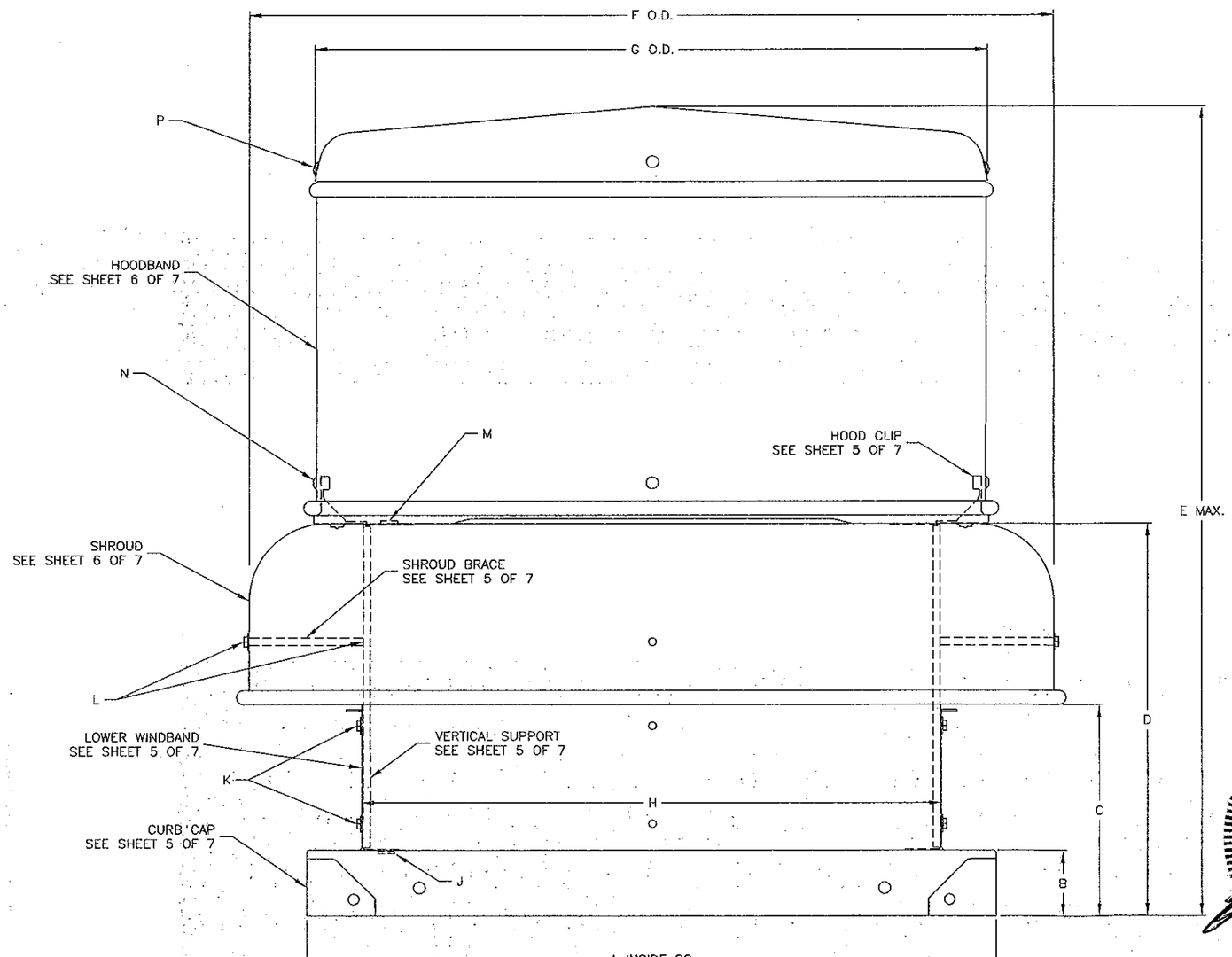

NOTES:

1. MODELS G AND GB HAVE BEEN SUCCESSFULLY TESTED IN ACCORDANCE WITH MAIAMI DADE TEST PROTOCOL TAS-202 (STATIC LOADING), TAS 201 (MISSLE IMPACT) AND TAS-203 (CYCLIC WIND) FANS ARE IMPACT RESISTANT.
2. ROOF STRUCTURE MUST BE DESIGNED TO WITHSTAND THE WEIGHT AND LOADING TRANSMITTED BY ROOF TOP FANS. FASTENERS SHALL BE AS SPECIFIED AND INSTALLED AS DETAILED.
3. DESIGN TESTING AND INSTALLATION CONFORMS TO AISC MANUAL OF STEEL CONSTRUCTION AND ALUMINUM DESIGN MANUAL.
4. FAN CURBS MUST BE ANCHORED TO ROOF FRAMING MEMBERS AND NOT TO THE ROOFING SYSTEM.
5. DESIGN, TESTING, AND INSTALLATION CONFORMS TO FLORIDA BUILDING CODE.
6. THIS APPROVAL IS FOR THE STRUCTURAL PERFORMANCE AND IMPACK RESISTANCE ONLY. INTERIOR MECHANISM AND/OR ELECTRICAL CIRCUITRY ARE OUTSIDE THE SCOPE OF THIS APPROVAL.
7. THIS PRODUCT HAS NOT BEEN TESTED FOR WATER PENETRATION ACCORDING TO FLORIDA BUILDING CODE, TAS 100(A), WIND DRIVEN RAIN TEST.

L. DAVID RICE LICENSE No. 50923 EXP. 2/28/2013 STATE OF FLORIDA PROFESSIONAL ENGINEER

July 14, 2011

RICE ENGINEERING
105 School Creek Trail
Luxemburg, WI 54217
Phone: 920.845.1042
Fax: 920.845.1048
www.rice-inc.com

Florida Firm No: F-01000005061
Certificate of Authorization: #9090
L. David Rice
Registration No: 50923

PRODUCT REVISED as complying with the Florida Building Code
Acceptance No 11-0802.07
Expiration Date 09/23/2014
By
Miami Dade Product Control

GREENHECK
FAN CORP. 6601 SOUTH PRAIRIE AVE. SHEBOYGAN WISCONSIN 53081-8400

TITLE: G/GB-060-300 SHEET 4 OF 7

DRAWN BY: YAKLOVICH
DATE: 04/02/2009
SCALE: 1/3
CAD DRAWING NO. HSA3004

REVISION	ECR	BY	DATE	SYM
CREATE DWG.		DFY	06/03/2009	0
ADDED G-097-098-099-103-123-133-143 163-183-203		SPI	05/25/2011	1

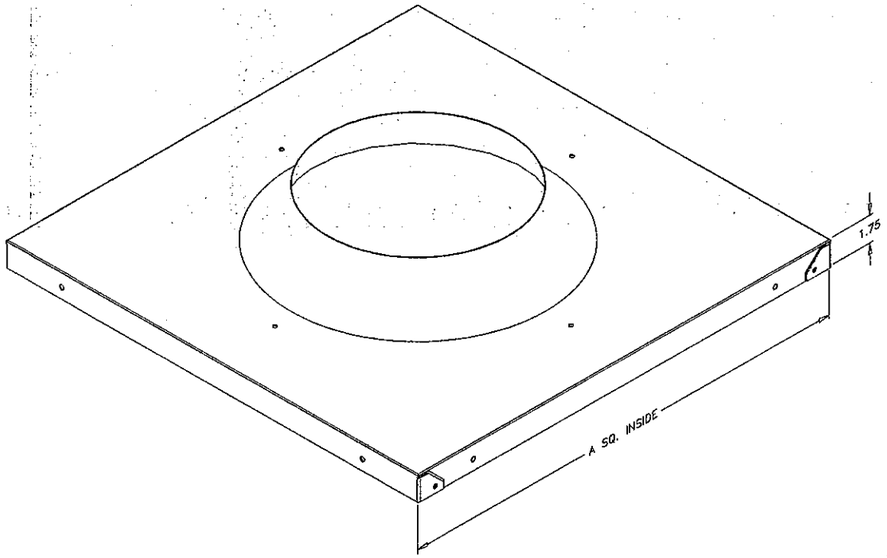

CURB CAP

1 REQ'D. PER UNIT

MODEL	A	CURB CAP
G-060-065-070-075-080-085-090-095	17.00	.051 ALUM. 1100-H14
G-101-121	19.00	.063 ALUM. 1100-H12
G-131-141	22.00	.063 ALUM. 1100-H12
G-150	26.00	.063 ALUM. 1100-H12
G-160-170-180	30.00	.063 ALUM. 1100-H14
GB-071-081-091 : G-097-098-099	19.00	.063 ALUM. 1100-H12
GB-101/HP-121-131 : G-103/HP-123-133	19.00	.063 ALUM. 1100-H12
GB-141/HP-161/HP : G-143/HP-163/HP	22.00	.063 ALUM. 1100-H12
GB-180/HP-200/HP : G-183/HP-203	30.00	.063 ALUM. 1100-H14
GB-220/HP-240/HP	34.00	.063 ALUM. 1100-H12
GB-260-300/HP	40.00	.063 ALUM. 1100-H12

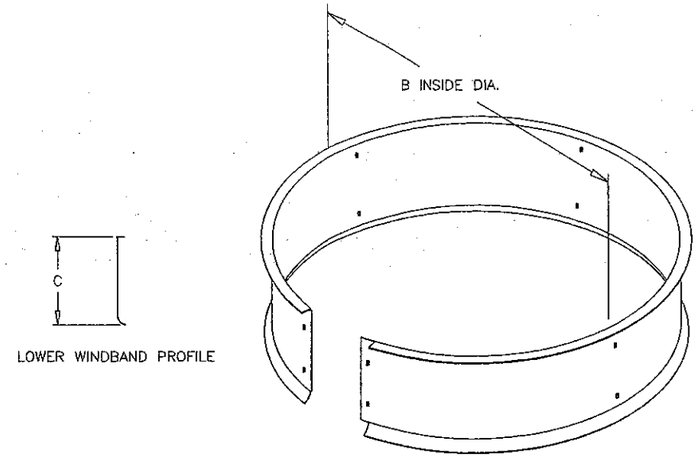

LOWER WINDBAND PROFILE

LOWER WINDBAND

ALUM. - 2 REQ'D. PER UNIT
GALV. - 1 REQ'D. PER UNIT

MODEL	B	C	LOWER WINDBAND
G-060-065-070-075	12.38	3.31	.040 ALUM. 3105-H14 OR 18 GA. GALV. G90 OR EQUIVALENT
G-080-085-090-095	14.25	4.00	
G-101-121	18.19	5.06	
G-131-141	21.08	5.06	
G-150	24.00	4.00	
G-160-170	27.00	5.06	
G-180	27.30	5.875	
GB-071-081-091-101/HP-121-131 G-097-098-099-103/HP-123-133	18.34	4.00	
GB-141/HP : G-143/HP	21.41	4.00	
GB-161/HP : G-163/HP	21.41	5.88	
GB-180/HP-200/HP : G-183/HP-203	27.30	5.88	
GB-220/HP-240/HP	30.50	7.88	
GB-260-300/HP	36.00	9.38	

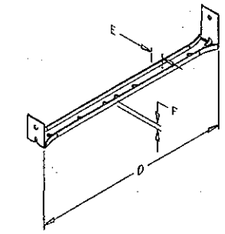

VERTICAL SUPPORT

MODEL	D	E	F	QTY.	VERTICAL SUPPORT
G-060-065-070-075	6.69	0.75	0.30	4	18 GA. GALV. G90
G-080-085-090-095	8.63	0.75	0.30	4	18 GA. GALV. G90
G-101-121	10.63	0.87	0.43	4	16 GA. GALV. G90
G-131-141-150	10.63	0.87	0.43	6	16 GA. GALV. G90
G-160-170	11.88	0.87	0.43	6	16 GA. GALV. G90
G-180	12.88	0.87	0.43	6	16 GA. GALV. G90
GB-071-081-091-101/HP-121-131 G-097-098-099-103/HP-123-133	9.81	0.87	0.43	4	14 GA. GALV. G90
GB-141/HP : G-143/HP	9.81	0.87	0.43	6	14 GA. GALV. G90
GB-161/HP : G-163/HP	11.75	0.87	0.43	6	14 GA. GALV. G90
GB-180/HP-200/HP : G-183/HP-203	12.81	0.87	0.43	6	14 GA. GALV. G90
GB-220/HP-240/HP	16.31	0.87	0.43	6	14 GA. GALV. G90
GB-260-300/HP	18.19	1.37	0.79	6	12 GA. GALV. G90

PRODUCT REVIEWED
as complying with the Florida
Building Code
Acceptance No 11-0802.07
Expiration Date 09/23/2014
By
Miami Dade Product Control

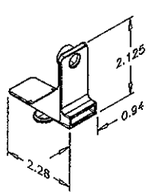

HOOD CLIP

MODEL	QTY.	HOOD CLIP
G-060-065-070-075	4	NYLON N1000 STL
G-080-085-090-095	4	NYLON N1000 STL
G-101-121	4	NYLON N1000 STL
G-131-141	4	NYLON N1000 STL
G-150-160-170	6	NYLON N1000 STL
G-180	6	NYLON N1000 STL
GB-071-081-091-101/HP-121-131 G-097-098-099-103/HP-123-133	4	NYLON N1000 STL
GB-141/HP-161/HP : G-143/HP-163/HP	4	NYLON N1000 STL
GB-180/HP-200/HP : G-183/HP-203	6	NYLON N1000 STL
GB-220/HP-240/HP	6	NYLON N1000 STL
GB-260-300/HP	6	NYLON N1000 STL

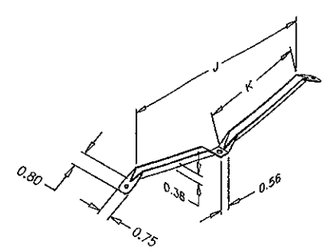

SHROUD BRACE

MODEL	J	K	QTY.	SHROUD BRACE
G-060-065-070-075-080-085-090 095-097-098-099-101/HP-121 123-133-143/HP-163/HP	—	—	0	
G-131-141	13.12	6.43	3	18 GA. GALV. G90
G-150	16.44	8.47	3	18 GA. GALV. G90
G-160-170-180	16.44	8.07	3	18 GA. GALV. G90
GB-071	—	—	0	
GB-081-091-101-101/HP-121	11.12	5.39	2	18 GA. GALV. G90
GB-131	13.12	6.89	2	18 GA. GALV. G90
GB-141/HP-161HP	13.12	6.43	3	18 GA. GALV. G90
GB-180/HP-200/HP : G-183/HP-203	16.43	8.07	3	18 GA. GALV. G90
GB-220/HP-240/HP	9.79	6.39	3	18 GA. GALV. G90
GB-260-300/HP	11.18	6.83	3	18 GA. GALV. G90

L. DAVID RICE
LICENSED
No. 50923
Exp. 2/28/2013
STATE OF
FLORIDA
PROFESSIONAL ENGINEER

July 14, 2011

RICE
ENGINEERING
105 School Creek Trail
Luxemburg, WI 54217
Phone: 920.845.1042
Fax: 920.845.1048
www.rice-inc.com

Florida Firm No: F-01000005061
Certificate of Authorization: #9090
L. David Rice
Registration No: 50923

ALL DIMENSIONS ARE IN INCHES

GREENHECK
FOLRECK AND SCHOFIELD, WISCONSIN 54476-0440

DRAWN BY YAKLOVICH
DATE 05/27/2009
SCALE 1/4
DWG NUMBER SIZE D
HSA3005

G/GB-060-300
SHEET 5 OF 7

REVISION	DCR	BY	DATE	SYM
CREATE DWG.		DFY	05/03 2009	0
ADDED G-097-098-099-103-123-133-143 163-183-203		SP1	05/25 2011	1

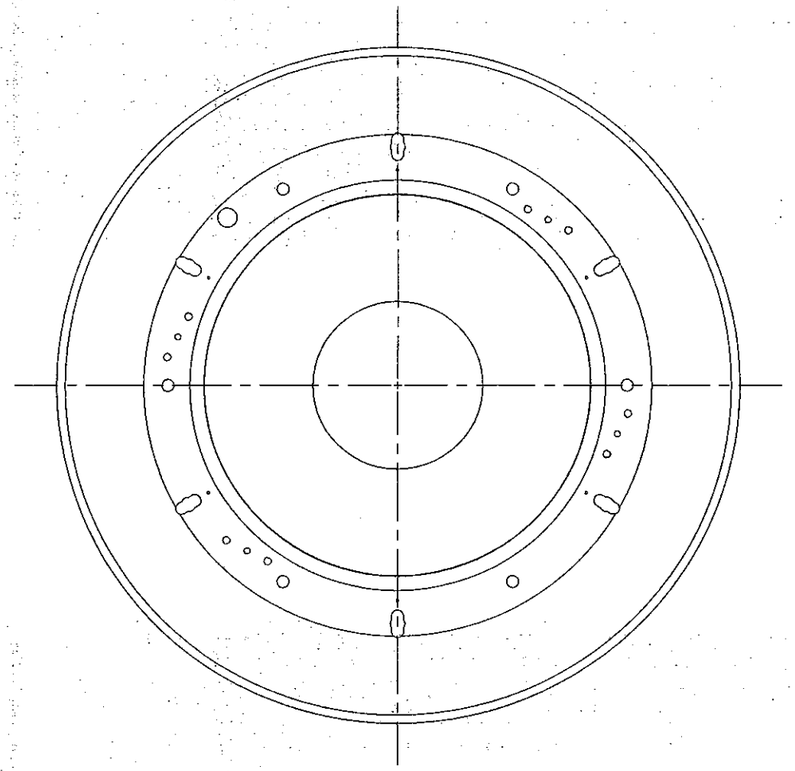

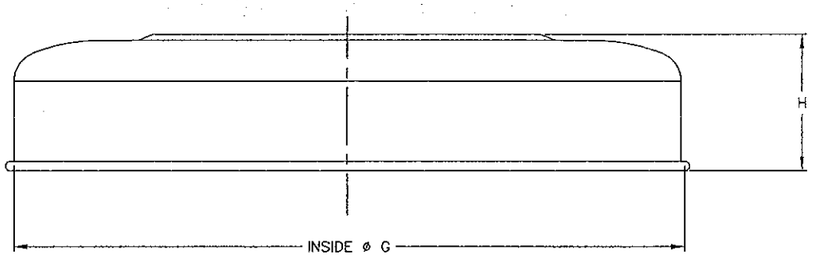

SHROUD
1 REQ'D. PER UNIT

MODEL	G	H	SHROUD
G-060-065-070-075	18.50	3.75	.051 ALUM. 1100-H14
G-080-085-090-095	21.00	4.75	.051 ALUM. 1100-H14
G-101-121	23.63	5.50	.051 ALUM. 1100-H14
G-131-141	27.63	5.94	.051 ALUM. 1100-H14
G-150-160-170-180	34.25	7.25	.063 ALUM. 1100-H14
GB-071-081-091-101/HP-121 G-097-098-099-103/HP-123	23.63	5.56	.051 ALUM. 1100-H14
GB-131 / G-133	27.63	6.06	.051 ALUM. 1100-H14
GB-141/HP-161/HP : G-143/HP-163/HP	27.63	5.88	.051 ALUM. 1100-H14
GB-180/HP-200/HP : G-183/HP-203	34.25	7.25	.063 ALUM. 1100-H14
GB-220/HP-240/HP	40.75	8.75	.063 ALUM. 1100-H14
GB-260-300/HP	46.00	8.75	.063 ALUM. 1100-H14

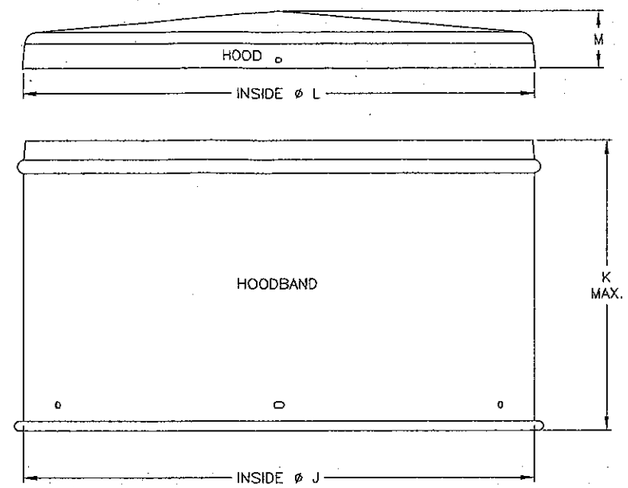

HOODBAND/HOOD
1 EA. REQ'D. PER UNIT

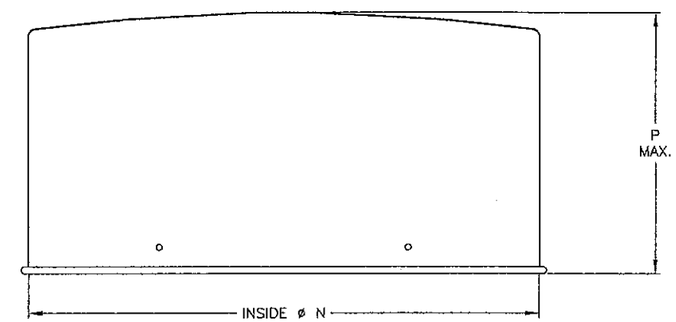

COVER
1 REQ'D. PER UNIT

MODEL	HOODBAND/HOOD J	K	L	M	HOODBAND	HOOD	COVER N	P	COVER
G-060-065-070-075	—	—	—	—	—	—	11.63	5.13	.040 ALUM. 1100-H14
G-080-085-090-095	—	—	—	—	—	—	14.50	5.63	.040 ALUM. 1100-H14
G-097-098-099-101-103-121-123-133	19.61	13.06	19.75	2.09	.040 ALUM. 1100-H14	.040 ALUM. 1100-H14	19.61	11.25	.040 ALUM. 3003-H0
G-131-141-143-163	22.15	13.44	22.25	2.75	.040 ALUM. 1100-H14	.040 ALUM. 1100-H14	22.18	8.75	.040 ALUM. 3003-H0
G-150-160-170	—	—	—	—	—	—	26.30	13.63	.040 ALUM. 3003-H0
G-180-183-203	26.36	14.94	26.44	2.94	.040 ALUM. 1100-H14	.040 ALUM. 1100-H14	26.36	13.63	.040 ALUM. 3003-H0
GB-071-081-091-101/HP-121-131	19.65	16.81	19.75	2.09	.040 ALUM. 1100-H14	.040 ALUM. 1100-H14	19.61	11.25	.040 ALUM. 3003-H0
GB-141/HP-161/HP	22.15	13.48	22.25	2.75	.040 ALUM. 1100-H14	.040 ALUM. 1100-H14	22.15	11.75	.040 ALUM. 3003-H0
GB-180/HP-200/HP	26.34	20.00	26.44	2.94	.040 ALUM. 1100-H14	.040 ALUM. 1100-H14	26.34	13.63	.040 ALUM. 3003-H0
GB-220/HP-240/HP	29.88	19.75	30.14	3.50	.040 ALUM. 1100-H14	.063 ALUM. 1100-H12	29.88	12.5	.040 ALUM. 3003-H0
GB-260-300/HP	35.94	23.25	36.25	3.81	.050 ALUM. 1100-H14	.050 ALUM. 1100-H14	—	—	—

L. DAVID RICE
LICENSED
No. 50923
Exp. 2/28/2013
STATE OF FLORIDA
PROFESSIONAL ENGINEER

July 14, 2011

RICE ENGINEERING
105 School Creek Trail
Luxemburg, WI 54217
Phone: 920.845.1042
Fax: 920.845.1048
www.rice-inc.com

Florida Firm No: F-01000005061
Certificate of Authorization: #9090
L. David Rice
Registration No: 50923

PRODUCT REVISED
as complying with the Florida Building Code
Acceptance No 11-0802.07
Expiration Date 09/23/2014
By _____
Miami Dade Product Control

ALL DIMENSIONS ARE IN INCHES

GREENHECK
FOND DU LAC, WISCONSIN 54936-0410

DRAWN BY: YAKLOVICH
DATE: 05/29/2009
SCALE: 1/4
CAD DRAWING NO.: HSA3006

TITLE: G/GB-060-300
SHEET 6 OF 7

REVISION	DCR	BY	DATE	SYM
CREATE DWG.		DFY	06/04/2009	0
ADDED CUE/CUBE-099 AND G-097-098-099 103-123-133-143-163-183-203		SPI	05/25/2011	1

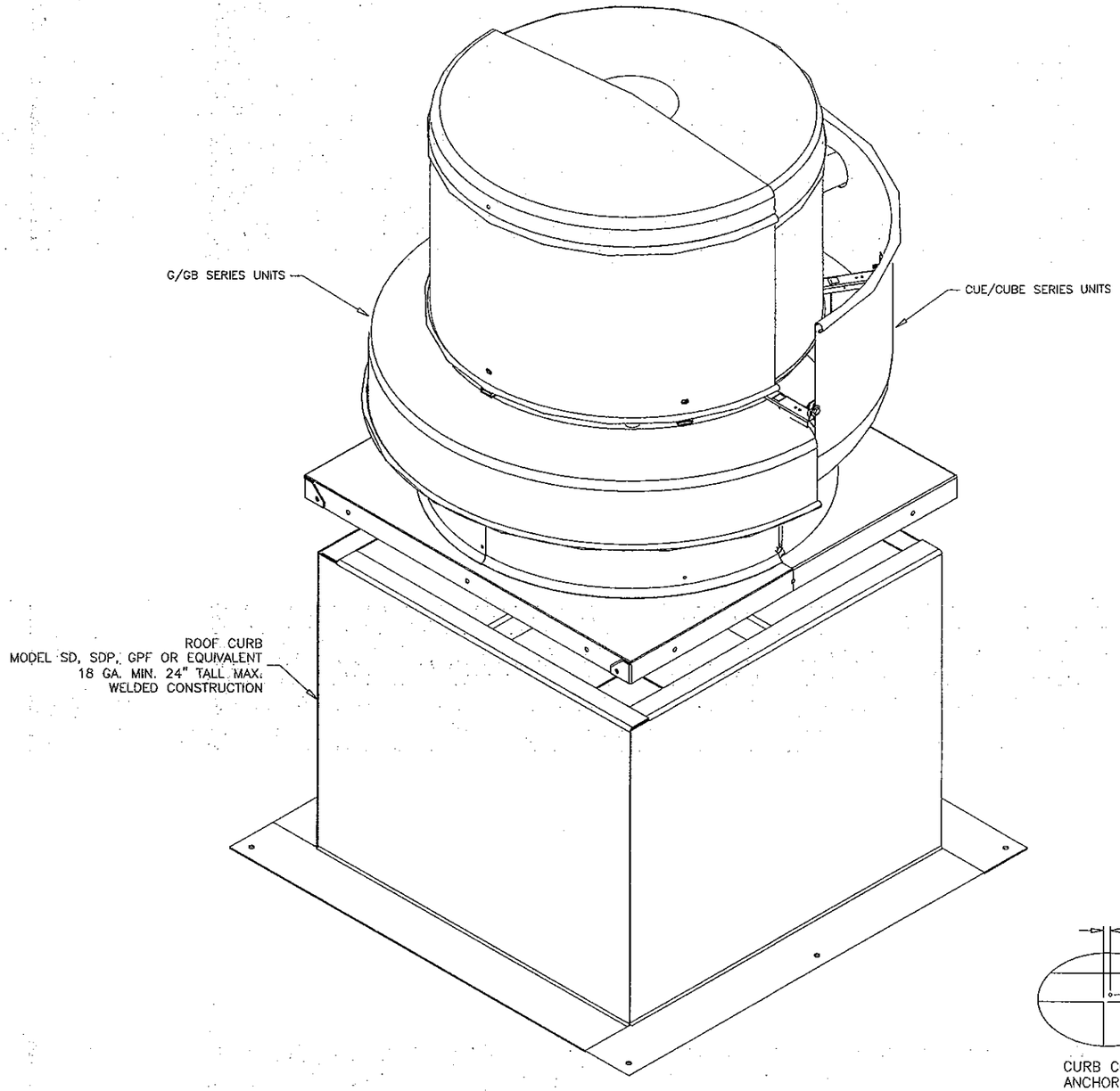

FAN TO CURB MOUNTING

UNIT SIZE	FASTENERS PER SIDE
CUE-060-065-070-075-080-085-090-095-098-099-101-121-131-141/HP-161/HP CUBE-098-099-101/HP-121-131-141/HP-161/HP/XP S-CUBE-141/HP-161/HP G-060-065-070-075-080-085-090-095-097-098-099-101-103-121-123-131-133 141-143-163 GB-071-081-091-101/HP-121-131-141/HP-161/HP	3
CUE-180/HP-200 CUBE-180/HP-200/HP-220/HP-240/HP/XP S-CUBE-200-240 G-150-160-170-180-183-203 GB-180/HP-200/HP-220/HP-240/HP	5
CUBE-300/HP/XP S-CUBE-300 GB-260-300/HP	9

FASTENERS ON EACH SIDE OF THE FAN ARE TO BE INSTALLED WITH ONE FASTENER 4 INCHES FROM EACH EDGE AND ONE FASTENER CENTERED. THE FASTENERS ARE TO BE EQUALLY SPACED. 5/16 INCH SELF-DRILLING SCREWS.

CURB TO DECK MOUNTING

UNIT SIZE	CONCRETE ANCHORING NO. OF FASTENERS PER SIDE	STEEL DECK ANCHORING NO. OF FASTENERS PER SIDE	TIMBER ANCHORING NO. OF FASTENERS PER SIDE
CUE/CUBE ≤ 161 G/GB ≤ 141	2	2	2
CUE/CUBE > 161 G/GB > 141	3	3	3

FASTENERS NEED TO BE LOCATED ON 2 OPPOSITE ENDS OF FAN CURB.

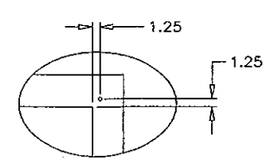

CURB CORNER ANCHOR DETAIL

PRODUCT REVISED
as complying with the Florida Building Code
Acceptance No 11-0802.07
Expiration Date 09/23/2014
By
Miami-Dade Product Control

L. DAVID RICE
LICENSED
No. 50923
Exp. 2/28/2013
STATE OF FLORIDA
PROFESSIONAL ENGINEER

July 14, 2011

RICE ENGINEERING
105 School Creek Trail
Luxemburg, WI 54217
Phone: 920.845.1042
Fax: 920.845.1048
www.rice-inc.com

Florida Firm No: F-01000005061
Certificate of Authorization: #9090
L. David Rice
Registration No: 50923

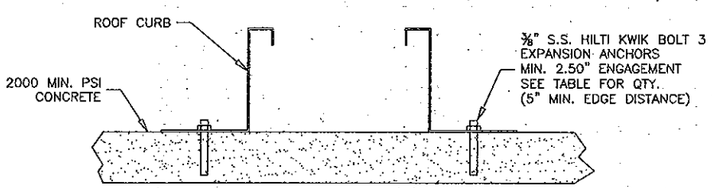

CONCRETE DECK ANCHORING

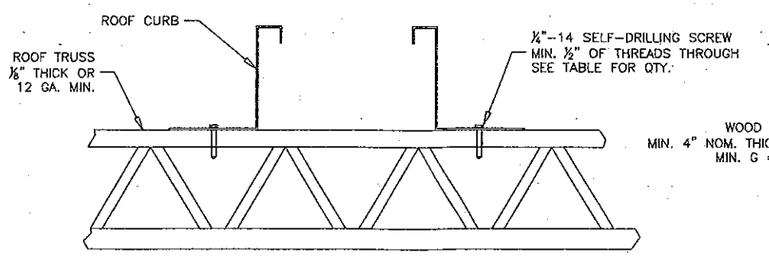

STEEL ANCHORING

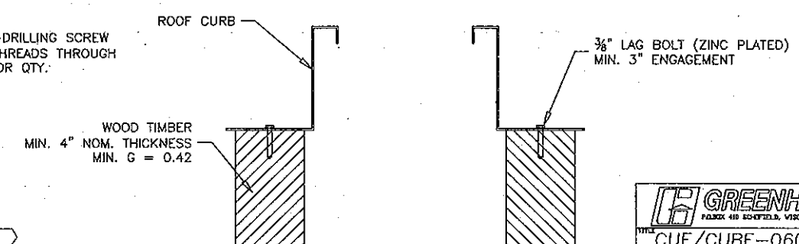

TIMBER ANCHORING

GREENHECK
P.O. BOX 410 SCHOFIELD, WISCONSIN 54476-0410

DRAWN BY	YAKLOVICH
DATE	06/04/2009
SCALE	1/4.5
CAD DRAWING NO.	HSA3007

TITLE: CUE/CUBE-060-300
G/GB-06-300
CURB MOUNTING
SHEET 7 OF 7