MIAMI-DADE COUNTY
DEPARTMENT OF PERMITTING, ENVIRONMENT, AND REGULATORY AFFAIRS (PERA)

MIAMI-DADE COUNTY
PRODUCT CONTROL SECTION
11805 SW 26 Street, Room 208
Miami, Florida 33175-2474
T (786) 315-2590 F (786) 315-2599
www.miamidade.gov/pera/

NOTICE OF ACCEPTANCE (NOA)

Accurex, LLC
P.O. Box 410
Schofield, WI 54476

SCOPE: This NOA is being issued under the applicable rules and regulations governing the use of construction materials. The documentation submitted has been reviewed and accepted by Miami-Dade County PERA -Product Control Section to be used in Miami Dade County and other areas where allowed by the Authority Having Jurisdiction (AHJ).

This NOA shall not be valid after the expiration date stated below. The Miami-Dade County Product Control Section (In Miami Dade County) and/or the AHJ (in areas other than Miami Dade County) reserve the right to have this product or material tested for quality assurance purposes. If this product or material fails to perform in the accepted manner, the manufacturer will incur the expense of such testing and the AHJ may immediately revoke, modify, or suspend the use of such product or material within their jurisdiction. PERA reserves the right to revoke this acceptance, if it is determined by Miami-Dade County Product Control Section that this product or material fails to meet the requirements of the applicable building code.

This product is approved as described herein, and has been designed to comply with the Florida Building Code, including the High Velocity Hurricane Zone.

DESCRIPTION: Model XRUD, XRUB, XRED and XREB Aluminum Rooftop Fans

APPROVAL DOCUMENT: Drawing No. **HSA4001** to **HSA4007**, titled "XRUD/XRUB and XRED/XREB-060-300", Sheets 1 through 7 of 7, dated 02/09/2010, with revision 1 dated 06/01/2011, prepared by Accurex, LLC, signed and sealed by L. David Rice, P.E., bearing the Miami-Dade County Product Control revision stamp with the Notice of Acceptance number and approval date by the Miami-Dade County Product Control Section.

MISSILE IMPACT RATING: Large and Small Missile Impact Resistant

LABELING: Each unit shall bear one of the following permanent labels:

Accurex, LLC	Accurex, LLC
1111 Greenheck Drive	212 Commerce Blvd.
Schofield, WI 54476	Kings Mountain, NC 28086

and the statement: "Miami-Dade County Product Control Approved".

RENEWAL of this NOA shall be considered after a renewal application has been filed and there has been no change in the applicable building code negatively affecting the performance of this product.

TERMINATION of this NOA will occur after the expiration date or if there has been a revision or change in the materials, use, and/or manufacture of the product or process. Misuse of this NOA as an endorsement of any product, for sales, advertising or any other purposes shall automatically terminate this NOA. Failure to comply with any section of this NOA shall be cause for termination and removal of NOA.

ADVERTISEMENT: The NOA number preceded by the words Miami-Dade County, Florida, and followed by the expiration date may be displayed in advertising literature. If any portion of the NOA is displayed, then it shall be done in its entirety.

INSPECTION: A copy of this entire NOA shall be provided to the user by the manufacturer or its distributors and shall be available for inspection at the job site at the request of the Building Official.

This NOA **revises NOA # 10-0303.04** and consists of this page 1 and evidence page E-1, as well as approval document mentioned above.

The submitted documentation was reviewed by **Carlos M. Utrera, P.E.**

MIAMI-DADE COUNTY APPROVED

10/24/2011

NOTICE OF ACCEPTANCE: EVIDENCE SUBMITTED

A. DRAWINGS

1. Drawing No. **HSA4001** to **HSA4007**, titled "XRUD/XRUB and XRED/XREB-060-300", Sheets 1 through 7 of 7, dated 02/09/2010, with revision 1 dated 06/01/2011, prepared by Accurex, LLC, signed and sealed by L. David Rice, P.E.

B. TESTS *"Submitted under NOA # 09-0624.09"*

1. Test report on 1) Uniform Static Air Pressure Test per FBC, TAS 202-94
   2) Large Missile Impact Test per FBC, TAS 201-94,
   3) Cyclic Wind Pressure Test per FBC, TAS 203-94,
   along with marked-up drawings and installation diagram of Model Cube-300 Belt Drive Rooftop Ventilating Fans, prepared by Architectural Testing, Inc., Test Report No. **88029.01-602-18**, dated 02/04/09, signed and sealed by Joseph A. Reed, P.E.
2. Test report on 1) Uniform Static Air Pressure Test per FBC, TAS 202-94
   2) Large Missile Impact Test per FBC, TAS 201-94,
   3) Cyclic Wind Pressure Test per FBC, TAS 203-94,
   along with marked-up drawings and installation diagram of Model GB-300 Belt Drive Rooftop Ventilating Fans, prepared by Architectural Testing, Inc., Test Report No. **88799.01-602-18**, dated 04/06/09, signed and sealed by Joseph A. Reed, P.E.

C. CALCULATIONS *"Submitted under NOA # 09-0624.09"*

1. Anchor verification calculations, prepared by Rice Engineering, dated 06/12/09, signed and sealed by L. David Rice, P.E.

D. QUALITY ASSURANCE

1. Miami-Dade Department of Permitting, Environment, and Regulatory Affairs (PERA)

E. MATERIAL CERTIFICATIONS

1. None.

F. STATEMENTS

1. Statement letter of code compliance with 2007 FBC, issued by Rice Engineering, dated 09/19/2011, signed and sealed by L. David Rice, P.E.
2. No financial interest letter issued by Rice Engineering, dated 06/12/09, signed and sealed by L. David Rice, P.E. ***"Submitted under NOA # 09-0624.09"***
3. Private label agreement dated 03/10/2010. ***"Submitted under NOA # 10-0303.04"***

10/24/2011

Carlos M. Utrera, P.E.
Product Control Examiner
NOA No. 11-0802.08
Expiration Date: September 23, 2014
Approval Date: November 03, 2011

REVISION	DGR	BY	DATE	SYM
CREATED DWG		DFY	02/09 2010	0
ADDED XRUD-099 AND XRUB-099		SPI	06/01 2011	1

MODEL	FASTENER G		FASTENER H		FASTENER J		FASTENER K	
	QTY.	DESCRIPTION	QTY.	DESCRIPTION	QTY.	DESCRIPTION	QTY.	DESCRIPTION
XRUD-060-065-070-075-080 085-090-095-098-099-101 121-131-141-161/HP	16 EA.	TCS ¼-20 X ¾ DACROMET COATED	4	RIVET, ¼ X 5/16 SEMI TUBULAR 5052 ALUM.	4	SCREW, ¼-20 X ⅝ 18-8/SS	4	PAL NUT, ¼-20 SPRING STEEL
XRUD-180/HP-200	24 EA.		6					
XRUB-098-099-101/HP-121 131-141/HP-161/HP/XP	16 EA.		4					
XRUB-180/HP-200/HP-220/HP 240/HP/XP-300/HP/XP	24 EA.		6					

DESIGN LIMITS	
Max: Wind Velocity:	150 mph (67 m/s)
Max: Desigh Load:	±75 psf (3.6 Kpa)
Max: Overall Enclosure Dia.	48.31 in. (1227 mm)
Max: Overall Unit Height:	44.50 in. (1130 mm)

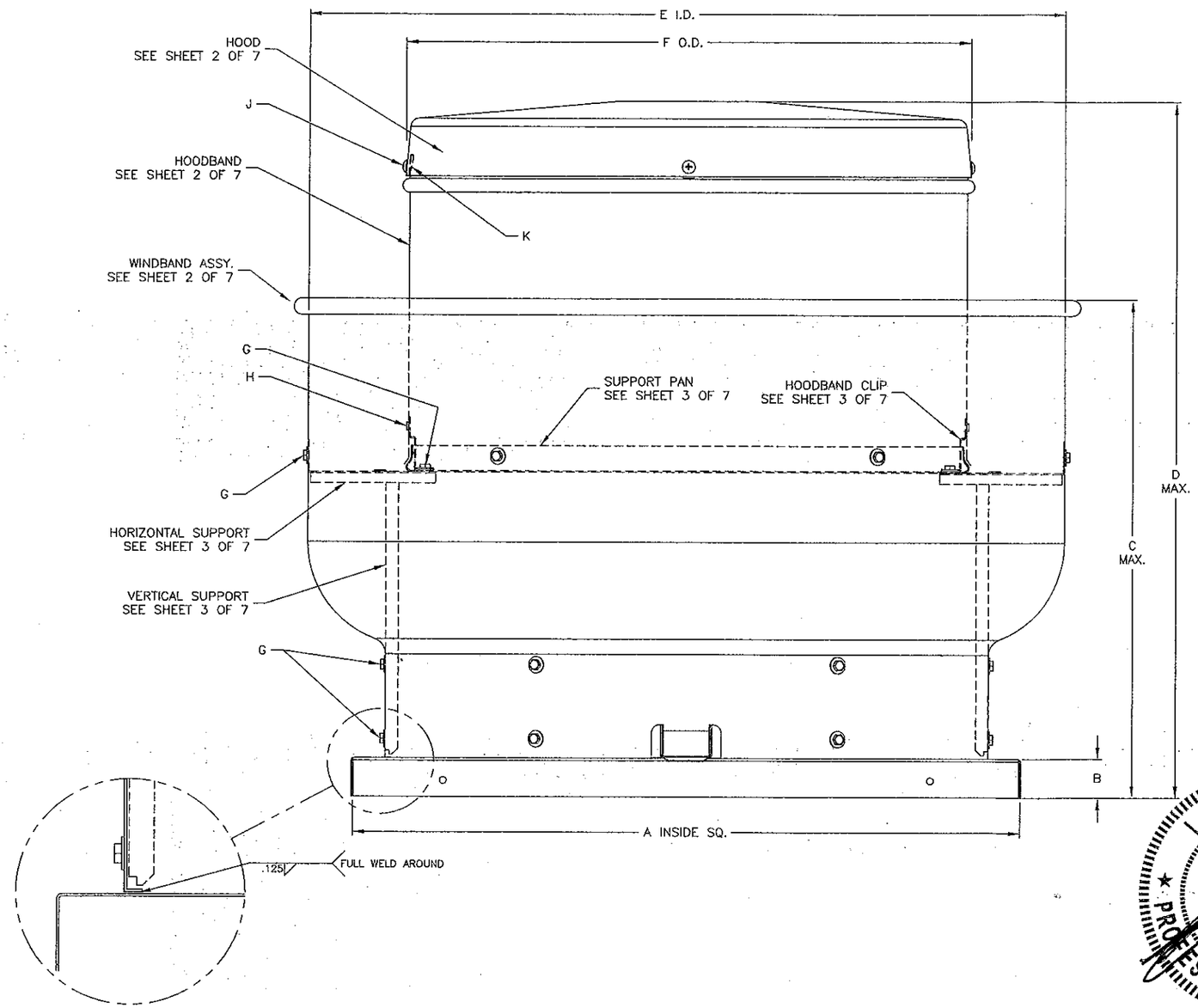

ALL DIMENSIONS ARE IN INCHES

MODEL	A	B	C	D	E	F	WEIGHT LBS.
XRUD-060	17.00	1.75	13.13	15.41	18.38	12.63	29
XRUD-065	17.00	1.75	13.13	15.41	18.38	12.63	29
XRUD-070	17.00	1.75	13.13	15.41	18.38	12.63	29
XRUD-075	17.00	1.75	13.13	15.41	18.38	12.63	29
XRUD-080	19.00	1.75	13.13	15.37	21.00	14.38	40
XRUD-085	19.00	1.75	13.13	15.37	21.00	14.38	40
XRUD-090	19.00	1.75	13.13	15.37	21.00	14.38	40
XRUD-095	19.00	1.75	15.19	17.31	21.00	14.38	40
XRUD-098	19.00	1.75	19.50	27.00	23.63	14.38	53
XRUD-099	19.00	1.75	19.50	27.00	23.63	14.38	53
XRUD-101	19.00	1.75	19.50	27.00	23.63	18.63	53
XRUD-121	19.00	1.75	19.50	27.00	23.63	18.63	64
XRUD-131	19.00	1.75	19.50	27.00	23.63	18.63	64
XRUD-141/HP	22.00	1.75	20.35	32.20	27.70	21.00	90
XRUD-161/HP	22.00	1.75	20.35	32.20	27.70	21.00	90
XRUD-180/HP	30.00	1.75	22.72	31.57	34.20	25.20	142
XRUD-200	30.00	1.75	22.72	31.57	34.20	25.20	142
XRUB-098	19.00	1.75	19.50	27.00	23.63	18.63	58
XRUB-099	19.00	1.75	19.50	27.00	23.63	18.63	58
XRUB-101/HP	19.00	1.75	19.50	27.00	23.63	18.63	58
XRUB-121	19.00	1.75	19.50	27.00	23.63	18.63	66
XRUB-131	19.00	1.75	19.50	27.00	23.63	18.63	66
XRUB-141/HP	22.00	1.75	20.35	32.20	27.70	21.00	84
XRUB-161/HP/XP	22.00	1.75	20.35	32.20	27.70	21.00	87
XRUB-180/HP	30.00	1.75	22.72	33.75	34.20	25.20	126
XRUB-200/HP	30.00	1.75	22.72	33.75	34.20	25.20	142
XRUB-220/HP	34.00	1.75	27.25	40.00	40.90	29.20	174
XRUB-240/HP/XP	34.00	1.75	27.25	40.00	40.90	29.20	175
XRUB-300/HP/XP	40.00	1.75	30.84	44.50	48.31	36.02	313

NOTES:

1. MODELS XRUD, XRUB, AND HAVE BEEN SUCCESSFULLY TESTED IN ACCORDANCE WITH MIAMI DADE TEST PROTOCOL TAS-201 (LARGE MISSILE IMPACT), TAS-203(CYCLIC WIND LOADING.) AND TAS-202 (STATIC LOADING).
2. ROOF STRUCTURE MUST BE DESIGNED TO WITHSTAND THE WEIGHT AND LOADING TRANSMITTED BY ROOF TOP FANS. FASTENERS SHALL BE AS SPECIFIED AND INSTALLED AS DETAILED.
3. DESIGN TESTING AND INSTALLATION CONFORMS TO AISC MANUAL OF STEEL CONSTRUCTION AND ALUMINUM DESIGN MANUAL.
4. FAN CURBS MUST BE ANCHORED TO ROOF FRAMING MEMBERS AND NOT TO THE ROOFING SYSTEM.
5. DESIGN, TESTING, AND INSTALLATION CONFORMS TO FLORIDA BUILDING CODE.
6. THIS APPROVAL IS FOR THE STRUCTURAL PERFORMANCE AND IMPACK RESISTANCE ONLY. INTERIOR MECHANISM AND/OR ELECTRICAL CIRCUITRY ARE OUTSIDE THE SCOPE OF THIS APPROVAL.
7. THIS PRODUCT HAS NOT BEEN TESTED FOR WATER PENETRATION ACCORDING TO FLORIDA BUILDING CODE, TAS 100(A), WIND DRIVEN RAIN TEST.

L. DAVID RICE
LICENSED
No. 50923
Exp. 2/28/2013
STATE OF
FLORIDA
PROFESSIONAL ENGINEER

July 14, 2011

PRODUCT REVISED
as complying with the Florida Building Code
Acceptance No. 11-0802.08
Expiration Date 09/23/2014
By
Miami Dade Product Control

RICE ENGINEERING
105 School Creek Trail
Luxemburg, WI 54217
Phone: 920.845.1042
Fax: 920.845.1048
www.rice-inc.com

Florida Firm No: F-01000005061
Certificate of Authorization: #9090
L. David Rice
Registration No: 50923

ACCUREX
ENGINEERED RESTAURANT SYSTEMS

TITLE: XRUD/XRUB-060-300
SHEET 1 OF 7

DRAWN BY: YAKLOVICH
DATE: 02/09/2010
SCALE: 1/3
DWG NO: HSA4001

REVISION	ECR	BY	DATE	SYM
CREATED DWG.		DFY	02/05 2010	0
ADDED XRUD-098 AND XRUB-099		SPI	06/01 2011	1

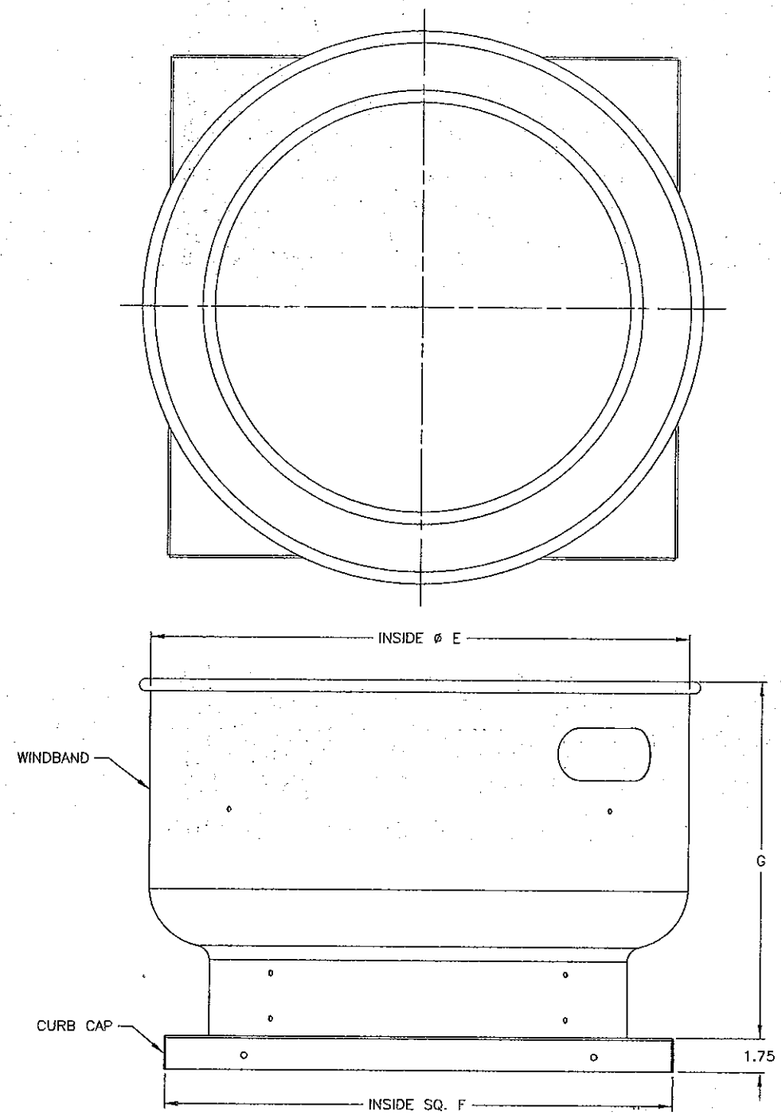

WINDBAND ASSY.
1 REQ'D. PER UNIT

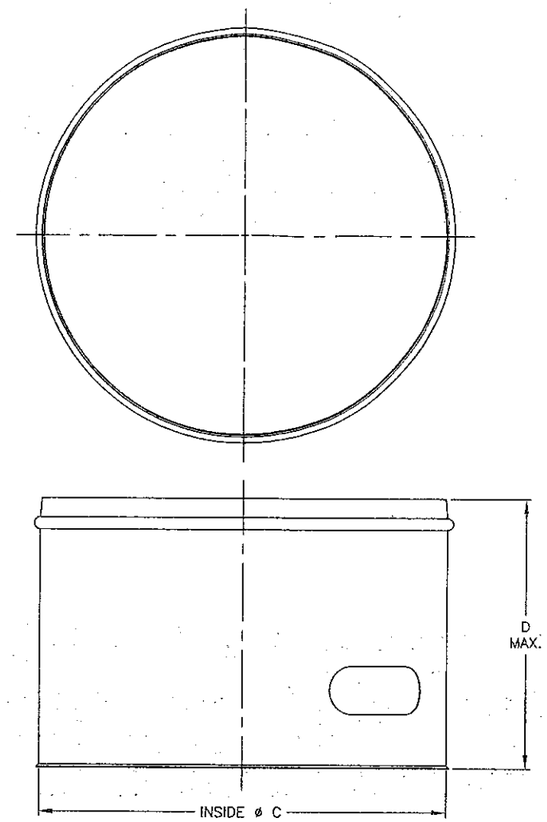

HOODBAND
1 REQ'D. PER UNIT

MODEL	C	D	HOOD
XRUD-060-65-70-75	12.41	5.47	.040 ALUM. 1100-H14
XRUD-080-85-90-95	14.29	5.47	.040 ALUM. 1100-H14
XRUD-098-099-101-121-131	18.43	12.00	.040 ALUM. 1100-H14
XRUD-141-161/HP	20.94	14.25	.040 ALUM. 1100-H14
XRUD-180/HP-200	25.13	14.25	.040 ALUM. 1100-H14
XRUB-098-099-101/HP-121-131	18.43	12.00	.040 ALUM. 1100-H14
XRUB-141/HP-161/HP/XP	20.94	14.25	.040 ALUM. 1100-H14
XRUB-180/HP-200/HP	25.13	18.00	.040 ALUM. 1100-H14
XRUB-220/HP-240/HP/XP	28.81	18.00	.040 ALUM. 1100-H14
XRUB-300/HP/XP	35.94	23.50	.051 ALUM. 1100-H14

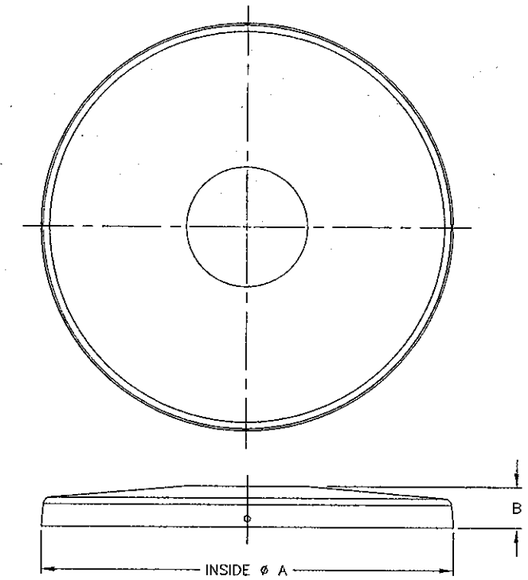

HOOD
1 REQ'D. PER UNIT

MODEL	A	B	HOOD
XRUD-060-65-70-75	12.50	1.85	.051 ALUM. 1100-H12
XRUD-080-85-90-95	14.38	1.94	.051 ALUM. 1100-H12
XRUD-098-099-101-121-131	18.63	2.66	.040 ALUM. 1100-H14
XRUD-141-161/HP	21.25	2.13	.040 ALUM. 1100-H14
XRUD-180/HP-200	25.44	3.44	.040 ALUM. 1100-H14
XRUB-098-099-101/HP-121-131	18.63	2.66	.040 ALUM. 1100-H14
XRUB-141/HP-161/HP/XP	21.25	2.13	.040 ALUM. 1100-H14
XRUB-180/HP-200/HP	25.44	3.44	.040 ALUM. 1100-H14
XRUB-220/HP-240/HP/XP	29.13	3.09	.051 ALUM. 1100-H14
XRUB-300/HP/XP	36.25	3.81	.051 ALUM. 1100-H14

MODEL	E	F	G	WINDBAND	CURB CAP
XURD-060-65-70-75	18.38	17.00	11.38	.051 ALUM. 1100-H12	.051 ALUM. 1100-H14
XRUD-080-85-90	21.00	19.00	11.50	.051 ALUM. 1100-H12	.063 ALUM. 1100-H12
XRUD-095	21.00	19.00	13.44	.051 ALUM. 1100-H12	.063 ALUM. 1100-H12
XRUD-098-099-101-121-131	23.63	19.00	17.75	.051 ALUM. 1100-H12	.063 ALUM. 1100-H12
XRUD-141/HP-161/HP	27.63	22.00	18.56	.051 ALUM. 1100-H12	.063 ALUM. 1100-H12
XRUD-180/HP-200	34.13	30.00	20.97	.063 ALUM. 1100-H22	.063 ALUM. 1100-H14
XRUB-098-099-101/HP-121-131	23.63	19.00	17.75	.051 ALUM. 1100-H12	.063 ALUM. 1100-H12
XRUB-141/HP-161/HP/XP	27.63	22.00	17.75	.051 ALUM. 1100-H12	.063 ALUM. 1100-H12
XRUB-180/HP-200/HP	34.13	30.00	20.97	.063 ALUM. 1100-H22	.063 ALUM. 1100-H14
XRUB-220/HP-240/HP/XP	40.78	34.00	25.50	.063 ALUM. 1100-H22	.063 ALUM. 1100-H12
XRUB-300/HP/XP	48.16	40.00	29.09	.080 ALUM. 1100-H22	.063 ALUM. 1100-H12

L. DAVID RICE
LICENSED
No. 50923
Exp. 2/28/2013
STATE OF FLORIDA
PROFESSIONAL ENGINEER

July 14, 2011

RICE
ENGINEERING
105 School Creek Trail
Luxemburg, WI 54217
Phone: 920.845.1042
Fax: 920.845.1048
www.rice-inc.com

Florida Firm No: F-01000005061
Certificate of Authorization: #9090
L. David Rice
Registration No: 50923

PRODUCT REVISED
as complying with the Florida
Building Code
Acceptance No. 11-0802.08
Expiration Date 09/23/2014
By
Miami Dade Product Control

ALL DIMENSIONS ARE IN INCHES

ACCUREX
ENGINEERED RESTAURANT SYSTEMS

TITLE: XRUD/XRUB-060-300
SHEET 2 OF 7

DRAWN BY: YAKLOVICH
DATE: 02/09/2010
SCALE: 1/4
JOB NUMBER NO.: HSA4002

REVISION	DCR	BY	DATE	SYM
CREATED DWG.		DFY	02/09/2010	0
ADDED XRUD-099 AND XRUB-099		SPI	06/01/2011	1

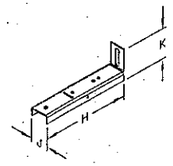

HORIZONTAL SUPPORT

MODEL	H	J	K	QTY.	HORIZONTAL SUPPORT
XRUD-060-65-70-75	4.68	1.03	2.00	4	16 GA. GALV. G90
XRUD-080-85-90-95	4.68	1.03	2.00	4	16 GA. GALV. G90
XRUD-098-099-101-121-131	5.18	1.03	2.00	4	16 GA. GALV. G90
XRUD-141-161/HP	4.68	1.03	2.00	4	16 GA. GALV. G90
XRUD-180/HP-200	5.72	1.03	2.00	6	16 GA. GALV. G90
XRUB-098-099-101/HP-121-131	5.18	1.03	2.00	4	16 GA. GALV. G90
XRUB-141/HP-161/HP/XP	4.68	1.03	2.00	4	16 GA. GALV. G90
XRUB-180/HP-200/HP	5.72	1.03	2.00	6	16 GA. GALV. G90
XRUB-220/HP-240/HP/XP	7.25	1.03	2.00	6	16 GA. GALV. G90
XRUB-300/HP/XP	7.94	1.55	2.50	6	14 GA. GALV. G90

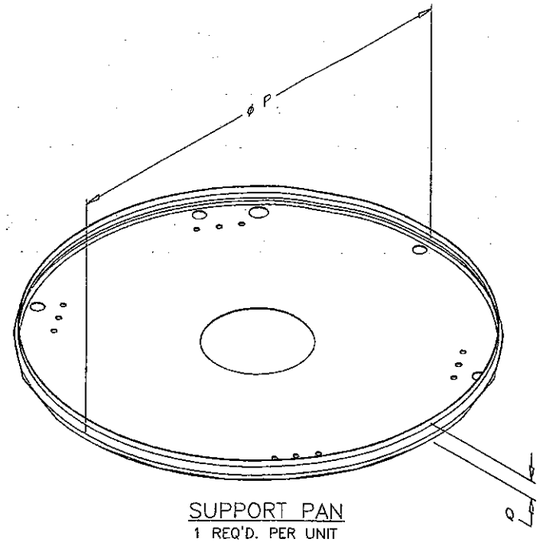

SUPPORT PAN

1 REQ'D. PER UNIT

MODEL	P	Q	SUPPORT PAN
XRUD-060-65-70-75	12.31	1.75	18 GA. GALV G90
XRUD-080-85-90-95	14.19	1.94	18 GA. GALV G90
XRUD-098-099	18.38	3.94	18 GA. GALV G90
XRUD-101	18.38	3.19	18 GA. GALV G90
XRUD-121	18.38	4.94	18 GA. GALV G90
XRUD-131	18.38	4.44	18 GA. GALV G90
XRUD-141-161/HP	20.88	2.41	20 GA. GALV G90
XRUD-180/HP-200	25.06	3.48	20 GA. GALV G90
XRUB-098-099101/HP-121-131	18.38	2.75	18 GA. GALV G90
XRUB-141/HP-161/HP/XP	20.88	1.50	20 GA. GALV G90
XRUB-180/HP-200/HP	25.06	1.19	20 GA. GALV G90
XRUB-220/HP-240/HP/XP	28.75	1.19	18 GA. GALV G90
XRUB-300/HP/XP	35.88	1.19	16 GA. GALV G90

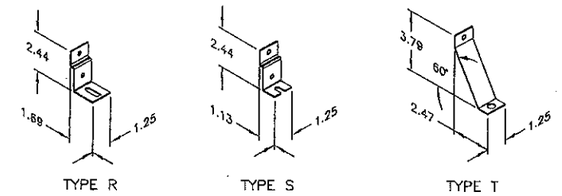

HOODBAND CLIPS

MODEL	TYPE	QTY.	HOODBAND CLIP
XRUD-060-65-70-75	R	3	16 GA. GALV G90
XRUD-080-85-90-95	R	3	16 GA. GALV G90
XRUD-098-099-101-121-131	T	3	16 GA. GALV G90
XRUD-141/HP-161/HP	R	4	16 GA. GALV G90
XRUD-180/HP-200	S	6	16 GA. GALV G90
XURB-098-099-101/HP-121-131	T	3	16 GA. GALV G90
XRUB-141/HP-161/HP/XP	R	4	16 GA. GALV G90
XRUB-180/HP-200/HP	S	6	16 GA. GALV G90
XRUB-220/HP-240/HP/XP	R	6	16 GA. GALV G90
XRUB-300/HP/XP	R	6	16 GA. GALV G90

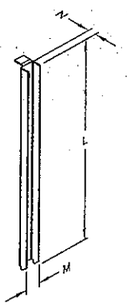

VERTICAL SUPPORT

MODEL	L	M	N	QTY.	VIRTICAL SUPPORT
XRUD-060-65-70-75-080-085-090	6.69	0.93	0.56	4	16 GA. GALV. G90
XRUD-095	8.63	0.93	0.56	4	16 GA. GALV. G90
XRUD-098-099-101-121-131	9.47	0.93	0.56	4	16 GA. GALV. G90
XRUD-141-161	10.88	0.93	0.56	4	16 GA. GALV. G90
XRUD-161HP	7.44	0.93	0.56	4	16 GA. GALV. G90
XRUD-180-200	12.78	0.93	0.56	6	16 GA. GALV. G90
XRUD-180HP	10.88	0.93	0.56	6	16 GA. GALV. G90
XRUB-098-099-101/HP-121-131	9.47	0.93	0.56	4	16 GA. GALV. G90
XRUB-141/HP-161/HP	10.88	0.93	0.56	4	16 GA. GALV. G90
XRUB-161XP	8.63	0.93	0.56	4	16 GA. GALV. G90
XRUB-180/HP-200/HP	12.78	0.93	0.56	6	16 GA. GALV. G90
XRUB-220/HP-240/HP	17.60	0.93	0.56	6	16 GA. GALV. G90
XRUB-240XP	12.78	0.93	0.56	6	16 GA. GALV. G90
XRUB-300/HP	18.09	1.39	0.69	6	14 GA. GALV. G90
XRUB-300XP	13.13	1.39	0.69	6	14 GA. GALV. G90

L. DAVID RICE
LICENSED
No. 50923
Exp. 2/28/2013
STATE OF
FLORIDA
PROFESSIONAL ENGINEER

July 14, 2011

RICE
ENGINEERING
105 School Creek Trail
Luxemburg, WI 54217
Phone: 920.845.1042
Fax: 920.845.1048
www.rice-inc.com

Florida Firm No: F-01000005061
Certificate of Authorization: #9090
L. David Rice
Registration No: 50923

PRODUCT REVISED
as complying with the Florida Building Code
Acceptance No 11-0802.08
Expiration Date 09/23/2014
By
Miami Dade Product Control

ALL DIMENSIONS ARE IN INCHES

ACCUREX
ENGINEERED RESTAURANT SYSTEMS

DRAWN BY: YAKLOVICH
DATE: 02/09/2010
SCALE: 1/4
CAD DRAWING NO: HSA4003

XRUD/XRUB-060-300
SHEET 3 OF 7

MODEL	FASTENER J		FASTENER K		FASTENER L		FASTENER M		FASTENER N		FASTENER P	
	QTY.	DESCRIPTION	QTY.	DESCRIPTION	QTY.	DESCRIPTION	QTY.	DESCRIPTION	QTY.	DESCRIPTION	QTY.	DESCRIPTION
XRED-060-065-070-075-080-085-090-095-097-098-099	4	RIVET, 7/32 X 3/8 AL FH SLD	8	RIVET, 3/16 X 3/8 AL FH SLD	—	TCS 1/4-20 X 3/4 DACROMET COATED	4	TCS 1/4-20 X 1 DACROMET COATED	4	SCREW, 1/4-20 X 5/8 PTH 18-8 SS	—	SMS, #10 X 1/2 PTH 18-8 SS
XRED-101/HP-103/HP-121-123											4	
XRED-131-133-141/HP-143/HP	6		12		9		6		6		—	
XRED-150-160-163/HP-170												
XRED-180-183/HP-203												
XREB-071-081-091-101/HP	4		8		6		4		4		4	
XREB-121-131												
XREB-141/HP-161/HP	6		12		9		6		6			
XREB-180/HP-200/HP												
XREB-220/HP-240/HP			12	TCS 1/4-20 X 3/4 DACROMET COATED								
XREB-260-300/HP		TCS 1/4-20 X 3/4 DACROMET COATED										

DESIGN LIMITS	
Max: Wind Velocity:	150 mph (67 m/s)
Max: Desigh Load:	±75 psf (3.6 Kpa)
Max: Overall Enclosure Dia.	48.31 in. (1227 mm)
Max: Overall Unit Height:	44.50 in. (1130 mm)

REVISION	DCR	BY	DATE	SYM
CREATED DWG.		DFY	02/09/2010	0
ADDED XRED-097-098-099-103/HP-123-133 143/HP-163/HP-183/HP-203		SP1	06/01/2011	1

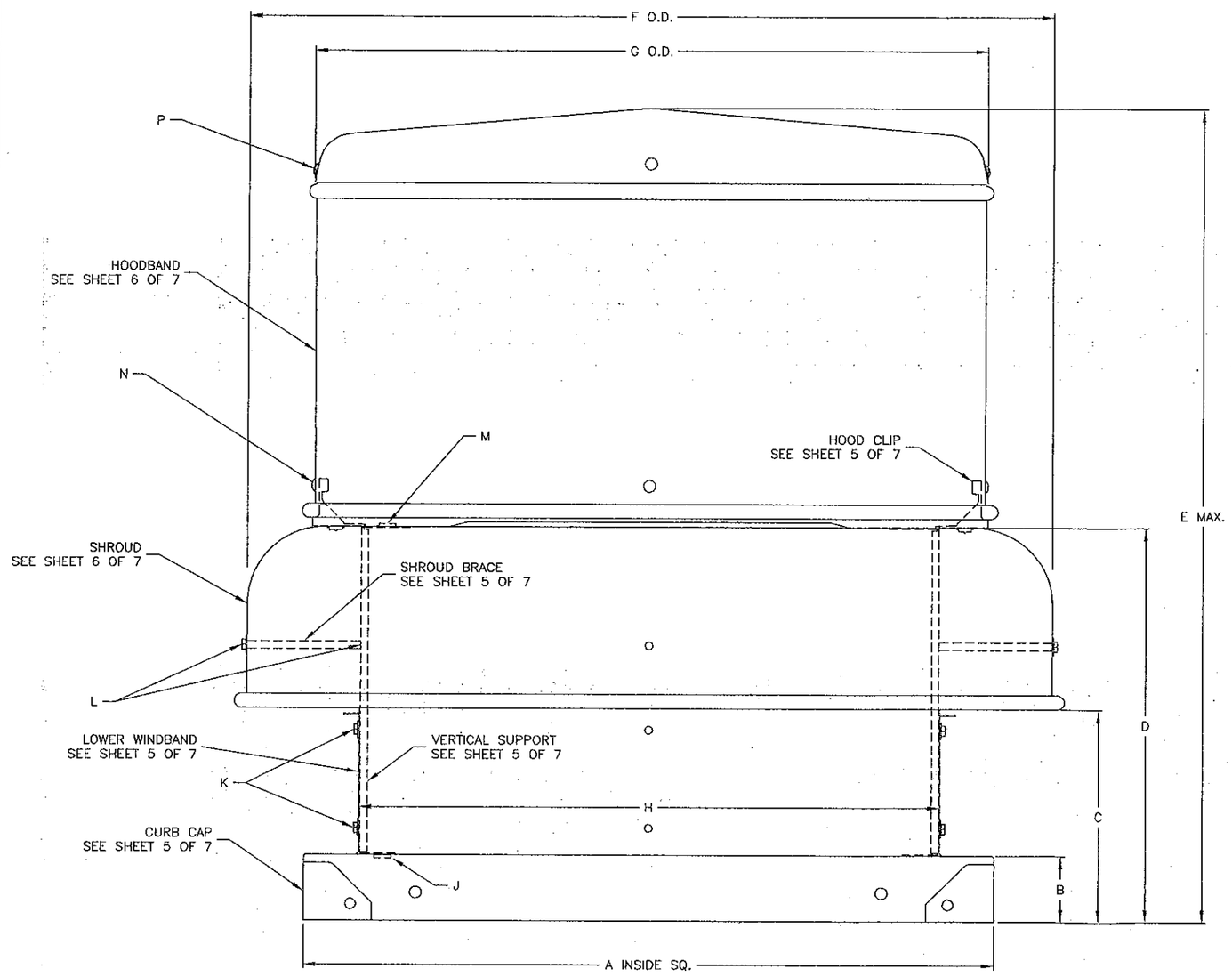

ALL DIMENSIONS ARE IN INCHES

MODEL	A	B	C	D	E	F	G	H	WEIGHT LBS.
XRED-060	17.00	1.75	4.69	8.44	13.88	18.50	11.63	12.38	18
XRED-065	17.00	1.75	4.69	8.44	13.88	18.50	11.63	12.38	18
XRED-070	17.00	1.75	4.69	8.44	13.88	18.50	11.63	12.38	18
XRED-075	17.00	1.75	4.69	8.44	13.88	18.50	11.63	12.38	18
XRED-080	17.00	1.75	5.63	10.38	16.31	21.00	14.50	14.25	26
XRED-085	17.00	1.75	5.63	10.38	16.31	21.00	14.50	14.25	26
XRED-090	17.00	1.75	5.63	10.38	16.31	21.00	14.50	14.25	26
XRED-095	17.00	1.75	5.63	10.38	16.31	21.00	14.50	14.25	26
XRED-101	19.00	1.75	6.52	10.38	20.13	23.72	19.68	18.19	43
XRED-121	19.00	1.75	7.25	10.38	20.13	23.72	19.68	18.19	43
XRED-131	22.00	1.75	6.71	10.38	20.13	27.63	22.19	21.08	59
XRED-141	22.00	1.75	6.71	12.38	28.07	27.63	22.19	21.08	59
XRED-150	26.00	1.75	5.38	12.38	22.43	34.25	26.23	24.00	59
XRED-160	30.00	1.75	6.63	13.63	23.68	34.25	26.23	27.00	59
XRED-170	30.00	1.75	6.63	13.63	23.68	34.25	26.23	27.00	81
XRED-180	30.00	1.75	7.63	14.63	31.90	34.25	26.34	27.23	81
XREB-071 : XRED-097	17.00	1.75	6.01	11.56	29.66	23.63	19.75	18.19	58
XREB-081 : XRED-098	17.00	1.75	6.01	11.56	29.66	23.63	19.75	18.19	58
XREB-091 : XRED-099	17.00	1.75	6.01	11.56	29.66	23.63	19.75	18.19	58
XREB-101/HP : XRED-103/HP	19.00	1.75	6.01	11.56	29.66	23.63	19.75	18.19	63
XREB-121 : XRED-123	19.00	1.75	6.01	11.56	29.66	23.63	19.75	18.19	66
XREB-131 : XRED-133	19.00	1.75	6.01	11.63	29.66	27.63	19.75	18.19	67
XREB-141/HP : XRED-143/HP	22.00	1.75	6.00	11.56	27.31	27.63	22.19	21.00	83
XREB-161/HP : XRED-163/HP	22.00	1.75	6.00	11.56	27.31	27.63	22.19	21.00	89
XREB-180/HP : XRED-183/HP	30.00	1.75	7.75	14.75	36.94	34.37	26.40	27.30	125
XREB-200/HP : XRED-203	30.00	1.75	7.75	14.75	36.94	34.37	26.40	27.30	138
XREB-220/HP	34.00	1.75	9.62	18.06	40.56	40.75	30.00	30.50	158
XREB-240/HP	34.00	1.75	9.62	18.06	40.56	40.75	30.00	30.50	158
XREB-260	40.00	1.75	11.64	19.77	45.16	46.20	35.94	36.00	305
XREB-300/HP	40.00	1.75	11.64	19.77	45.16	46.20	35.94	36.00	320

NOTES:

1. MODELS XRED AND XREB HAVE BEEN SUCCESSFULLY TESTED IN ACCORDANCE WITH MIAMI DADE TEST PROTOCOL TAS-202 (STATIC LOADING), TAS 201 (MISSLE IMPACT) AND TAS-203 (CYCLIC WIND) FANS ARE IMPACT RESISTANT.
2. ROOF STRUCTURE MUST BE DESIGNED TO WITHSTAND THE WEIGHT AND LOADING TRANSMITTED BY ROOF TOP FANS. FASTENERS SHALL BE AS SPECIFIED AND INSTALLED AS DETAILED.
3. DESIGN TESTING AND INSTALLATION CONFORMS TO AISC MANUAL OF STEEL CONSTRUCTION AND ALUMINUM DESIGN MANUAL.
4. FAN CURBS MUST BE ANCHORED TO ROOF FRAMING MEMBERS AND NOT TO THE ROOFING SYSTEM.
5. DESIGN, TESTING, AND INSTALLATION CONFORMS TO FLORIDA BUILDING CODE.
6. THIS APPROVAL IS FOR THE STRUCTURAL PERFORMANCE AND IMPACK RESISTANCE ONLY. INTERIOR MECHANISM AND/OR ELECTRICAL CIRCUITRY ARE OUTSIDE THE SCOPE OF THIS APPROVAL.
7. THIS PRODUCT HAS NOT BEEN TESTED FOR WATER PENETRATION ACCORDING TO FLORIDA BUILDING CODE, TAS 100(A), WIND DRIVEN RAIN TEST.

L. DAVID RICE
LICENSE
No. 50923
Exp. 2/28/2013
STATE OF
FLORIDA
PROFESSIONAL ENGINEER

July 14, 2011

RICE ENGINEERING
105 School Creek Trail
Luxemburg, WI 54217
Phone: 920.845.1042
Fax: 920.845.1048
www.rice-inc.com

Florida Firm No: F-01000005061
Certificate of Authorization: #9090
L. David Rice
Registration No: 50923

PRODUCT REVISED
as complying with the Florida Building Code
Acceptance No 11-0802.08
Expiration Date 04/23/2014
By
Miami Dade Product Control

ACCUREX ENGINEERED RESTAURANT SYSTEMS

DRAWN BY	YAKLOVICH
DATE	02/09/2010
SCALE	1/3
DWG NUMBER	HSA4004

XRED/XREB-060-300
SHEET 4 OF 7

REVISION	DCR	BY	DATE	SYM
CREATED DWG.		DFY	02/09 2010	0
ADDED XRED-097-098-099-103/HP-123-133 143/HP-163/HP-183/HP-203		SPJ	06/03 2011	1

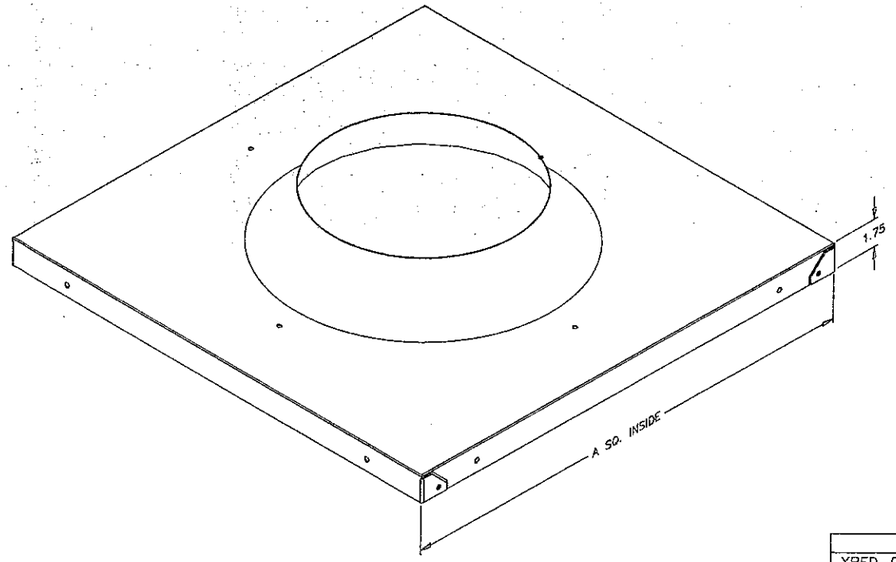

CURB CAP

1 REQ'D. PER UNIT

MODEL	A	CURB CAP
XRED-060-065-070-075-080-085-090-095	17.00	.051 ALUM. 1100-H14
XRED-101-121	19.00	.063 ALUM. 1100-H12
XRED-131-141	22.00	.063 ALUM. 1100-H12
XRED-150	26.00	.063 ALUM. 1100-H12
XRED-160-170-180	30.00	.063 ALUM. 1100-H14
XREB-071-081-091 : XRED-097-098-099	17.00	.063 ALUM. 1100-H12
XREB-101/HP-121-131 : XRED-103/HP-123-133	19.00	.063 ALUM. 1100-H12
XREB-141/HP-161/HP : XRED-143/HP-163/HP	22.00	.063 ALUM. 1100-H12
XREB-180/HP-200/HP : XRED-183/HP-203	30.00	.063 ALUM. 1100-H14
XREB-220/HP-240/HP	34.00	.063 ALUM. 1100-H12
XREB-260-300/HP	40.00	.063 ALUM. 1100-H12

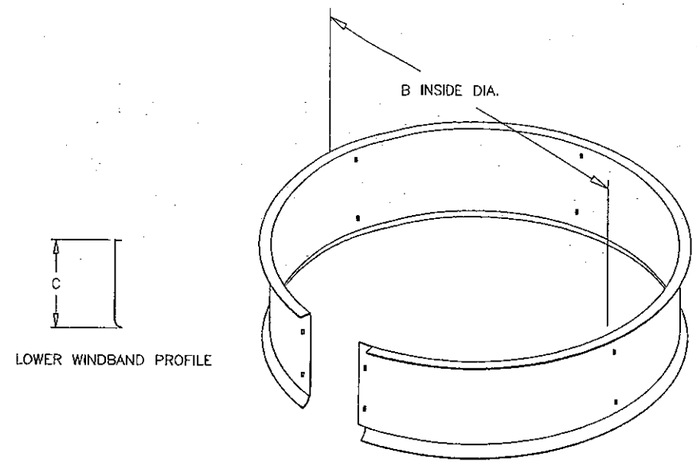

LOWER WINDBAND PROFILE

LOWER WINDBAND

ALUM. - 2 REQ'D. PER UNIT
GALV. - 1 REQ'D. PER UNIT

MODEL	B	C	LOWER WINDBAND
XRED-060-065-070-075	12.38	3.31	.040 ALUM. 3105-H14 OR 18 GA. GALV. G90 OR EQUIVALENT
XRED-080-085-090-095	14.25	4.00	
XRED-101-121	18.19	5.06	
XRED-131-141	21.08	5.06	
XRED-150	24.00	4.00	
XRED-160-170	27.00	5.06	
XRED-180	27.30	5.875	
XREB-071-081-091-101/HP-121-131 XRED-097-098-099-103/HP-123-133	18.34	4.00	
XREB-141/HP : XRED-143/HP	21.41	4.00	
XREB-161/HP : XRED-163/HP	21.41	5.88	
XREB-180/HP-200/HP : XRED-183/HP-203	27.30	5.88	
XREB-220/HP-240/HP	30.50	7.88	
XREB-260-300/HP	36.00	9.38	

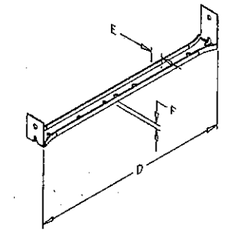

VERTICAL SUPPORT

MODEL	D	E	F	QTY.	VERTICAL SUPPORT
XRED-060-065-070-075	6.69	0.75	0.30	4	18 GA. GALV. G90
XRED-080-085-090-095	8.63	0.75	0.30	4	18 GA. GALV. G90
XRED-101-121	10.63	0.87	0.43	4	16 GA. GALV. G90
XRED-131-141-150	10.63	0.87	0.43	6	16 GA. GALV. G90
XRED-160-170	11.88	0.87	0.43	6	16 GA. GALV. G90
XRED-180	12.88	0.87	0.43	6	16 GA. GALV. G90
XREB-071-081-091-101/HP-121-131 XRED-097-098-099-103/HP-123/133	9.81	0.87	0.43	4	14 GA. GALV. G90
XREB-141/HP : XRED-143/HP	9.81	0.87	0.43	6	14 GA. GALV. G90
XREB-161/HPM : XRED-163/HP	11.75	0.87	0.43	6	14 GA. GALV. G90
XREB-180/HP-200/HP : XRED-183/HP-203	12.81	0.87	0.43	6	14 GA. GALV. G90
XREB-220/HP-240/HP	16.31	0.87	0.43	6	14 GA. GALV. G90
XREB-260-300/HP	18.19	1.37	0.79	6	12 GA. GALV. G90

PRODUCT REVISED
as complying with the Florida Building Code
Acceptance No 11-0802.08
Expiration Date 07/23/2014
By
Miami Dade Product Control

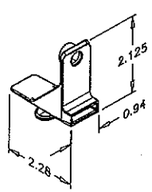

HOOD CLIP

MODEL	QTY.	HOOD CLIP
XRED-060-065-070-075	4	NYLON N1000 STL
XRED-080-085-090-095	4	NYLON N1000 STL
XRED-101-121	4	NYLON N1000 STL
XRED-131-141	4	NYLON N1000 STL
XRED-150-160-170	6	NYLON N1000 STL
XRED-180	6	NYLON N1000 STL
XREB-071-081-091-101/HP-121-131 XRED-097-098-099-103/HP-123-133	4	NYLON N1000 STL
XREB-141/HP-161/HP : XRED-143/HP-163/HP	4	NYLON N1000 STL
XREB-180/HP-200/HP : XRED-183/HP-203	6	NYLON N1000 STL
XREB-220/HP-240/HP	6	NYLON N1000 STL
XREB-260-300/HP	6	NYLON N1000 STL

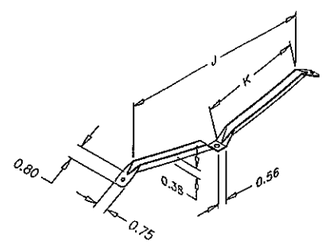

SHROUD BRACE

MODEL	J	K	QTY.	SHROUD BRACE
XRED-060-065-070-075	—	—	0	
XRED-080-085-090-095	—	—	0	
XRED-101-121	—	—	0	
XRED-131-141	13.12	6.43	3	18 GA. GALV. G90
XRED-150	16.44	8.47	3	18 GA. GALV. G90
XRED-160-170-180	16.44	8.07	3	18 GA. GALV. G90
XREB-071	—	—	0	
XREB-081-091-101-101/HP-121	11.12	5.39	2	18 GA. GALV. G90
XREB-131	13.12	6.89	2	18 GA. GALV. G90
XREB-141/HP-161HP	13.12	6.43	3	18 GA. GALV. G90
XREB-180/HP-200/HP : XRED-183/HP-203	16.43	8.07	3	18 GA. GALV. G90
XREB-220/HP-240/HP	9.79	6.39	3	18 GA. GALV. G90
XREB-260-300/HP	11.18	6.83	3	18 GA. GALV. G90

L. DAVID RICE
LICENSE
No. 50923
Exp. 2/28/2013
STATE OF
FLORIDA
PROFESSIONAL ENGINEER

July 14, 2011

RICE
ENGINEERING
105 School Creek Trail
Luxemburg, WI 54217
Phone: 920.845.1042
Fax: 920.845.1048
www.rice-inc.com

Florida Firm No: F-01000005061
Certificate of Authorization: #9090
L. David Rice
Registration No: 50923

ALL DIMENSIONS ARE IN INCHES

ACCUREX
ENGINEERED RESTAURANT SYSTEMS

DRAWN BY: YAKLOVICH
DATE: 02/09/2010
SCALE: 1/4

TITLE: XRED/XREB-060-300
SHEET 5 OF 7

CAD DRAWING NO: HSA4005

REVISION	DCR	BY	DATE	SYM
CREATED DWG.		DFY	09/08 2010	0
ADDED XRED-097-098-099-103/HP-123 133-143/HP-163/HP-183/HP-203		SPI	06/01 2011	1

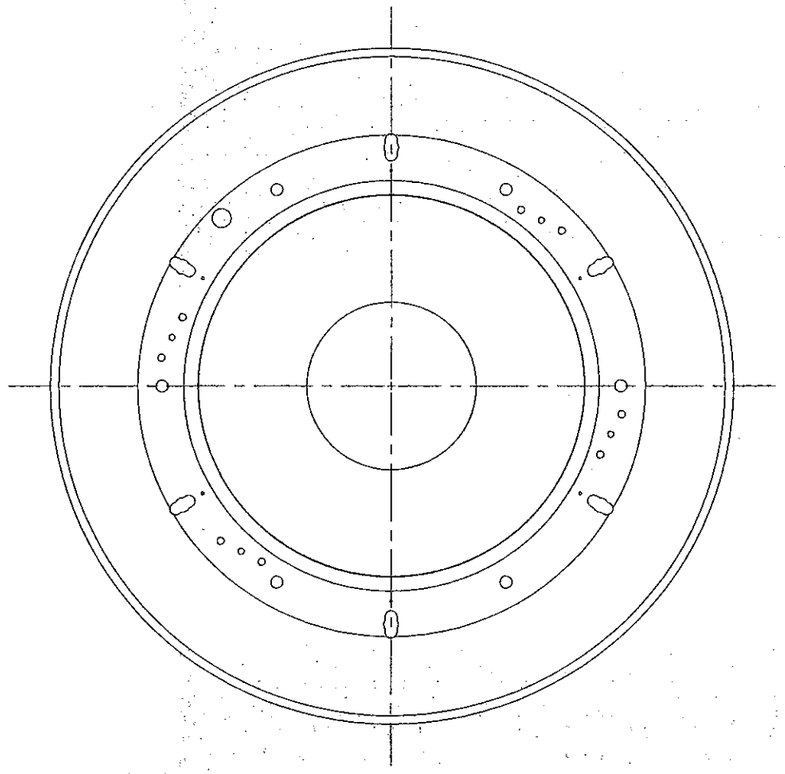

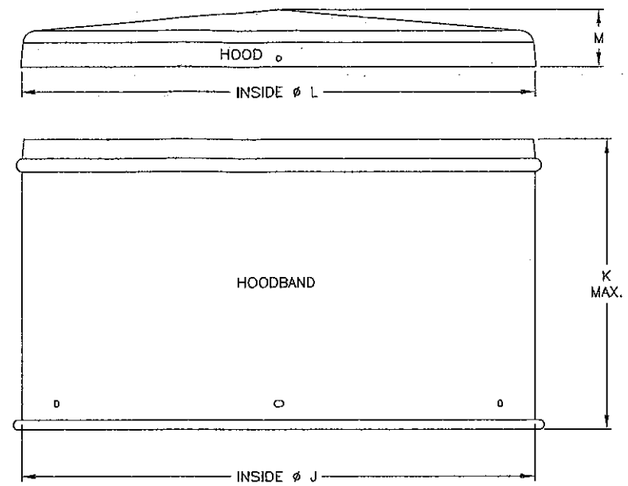

HOODBAND/HOOD
1 EA. REQ'D. PER UNIT

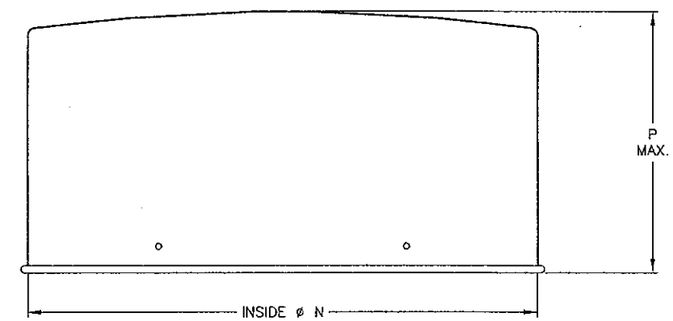

COVER
1 REQ'D. PER UNIT

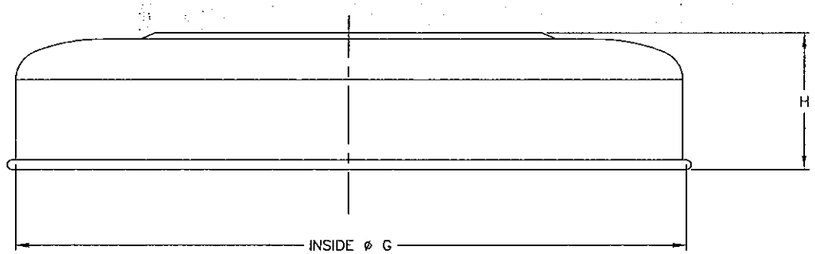

SHROUD
1 REQ'D. PER UNIT

MODEL	HOODBAND/HOOD J	K	L	M	HOODBAND	HOOD	COVER N	P	COVER
XRED-060-065-070-075	—	—	—	—	—	—	11.63	5.13	.040 ALUM. 1100-H14
XRED-080-085-090-095	—	—	—	—	—	—	14.50	5.63	.040 ALUM. 1100-H14
XRED-097-098-099-101-103/HP-121-123-133	19.61	13.06	19.75	2.09	.040 ALUM. 1100-H14	.040 ALUM. 1100-H14	19.61	11.25	.040 ALUM. 3003-H0
XRED-131-141-143/HP-163/HP	22.15	13.48	22.25	2.75	.040 ALUM. 1100-H14	.040 ALUM. 1100-H14	22.15	7.75	.040 ALUM. 3003-H0
XRED-150-160-170	—	—	—	—	—	—	26.30	13.63	.040 ALUM. 3003-H0
XRED-180-183/HP-203	26.36	14.94	26.44	2.94	.040 ALUM. 1100-H14	.040 ALUM. 1100-H14	26.36	13.63	.040 ALUM. 3003-H0
XREB-071-081-091-101/HP-121-131	19.65	16.81	19.75	2.09	.040 ALUM. 1100-H14	.040 ALUM. 1100-H14	19.61	11.25	.040 ALUM. 3003-H0
XREB-141/HP-161/HP	22.15	13.48	22.25	2.75	.040 ALUM. 1100-H14	.040 ALUM. 1100-H14	22.15	11.75	.040 ALUM. 3003-H0
XREB-180/HP-200/HP	26.34	20.00	26.44	2.94	.040 ALUM. 1100-H14	.040 ALUM. 1100-H14	26.34	13.63	.040 ALUM. 3003-H0
XREB-220/HP-240/HP	29.88	19.75	30.14	3.50	.040 ALUM. 1100-H14	.063 ALUM. 1100-H12	29.88	12.5	.040 ALUM. 3003-H0
XREB-260-300/HP	35.94	23.25	36.25	3.81	.050 ALUM. 1100-H14	.050 ALUM. 1100-H14	—	—	—

MODEL	G	H	SHROUD
XRED-060-065-070-075	18.50	3.75	.051 ALUM. 1100-H14
XRED-080-085-090-095	21.00	4.75	.051 ALUM. 1100-H14
XRED-101-121	23.63	5.50	.051 ALUM. 1100-H14
XRED-131-141	27.63	5.94	.051 ALUM. 1100-H14
XRED-150-160-170-180	34.25	7.25	.063 ALUM. 1100-H14
XREB-071-081-091-101/HP-121 XRED-097-098-099-103/HP-123	23.63	5.56	.051 ALUM. 1100-H14
XREB-131 : XRED-133	27.63	6.06	.051 ALUM. 1100-H14
XREB-141/HP-161/HP : XRED-143/HP-163/HP	27.63	5.88	.051 ALUM. 1100-H14
XREB-180/HP-200/HP : XRED-183/HP-203	34.25	7.25	.063 ALUM. 1100-H14
XREB-220/HP-240/HP	40.75	8.75	.063 ALUM. 1100-H14
XREB-260-300/HP	46.00	8.75	.063 ALUM. 1100-H14

L. DAVID RICE
LICENSED
No. 50923
EXP. 2/28/2013
STATE OF FLORIDA
PROFESSIONAL ENGINEER

July 14, 2011

RICE
ENGINEERING
105 School Creek Trail
Luxemburg, WI 54217
Phone: 920.845.1042
Fax: 920.845.1048
www.rice-inc.com

Florida Firm No: F-01000005061
Certificate of Authorization: #9090
L. David Rice
Registration No: 50923

PRODUCT REVISED
as complying with the Florida
Building Code
Acceptance No LL-0802-08
Expiration Date 09/23/2014
By
Miami Dade Product Control

ALL DIMENSIONS ARE IN INCHES

ACCUREX
ENGINEERED RESTAURANT SYSTEMS

TITLE: XRED/XREB-060-300
SHEET 6 OF 7

DRAWN BY: YAKLOVICH
DATE: 02/09/2010
SCALE: 1/4
OUR DRAWING NO: HSA4006
REV: 1

REVISION	DCR	BY	DATE	SYM
CREATED DWG.		DFY	02/09/2010	0
ADDED XRUB/D-099 & XREB/D-097-098-099 103/HP-123-133-143/HP-163/HP-183/HP-203		SPI	06/01/2011	1

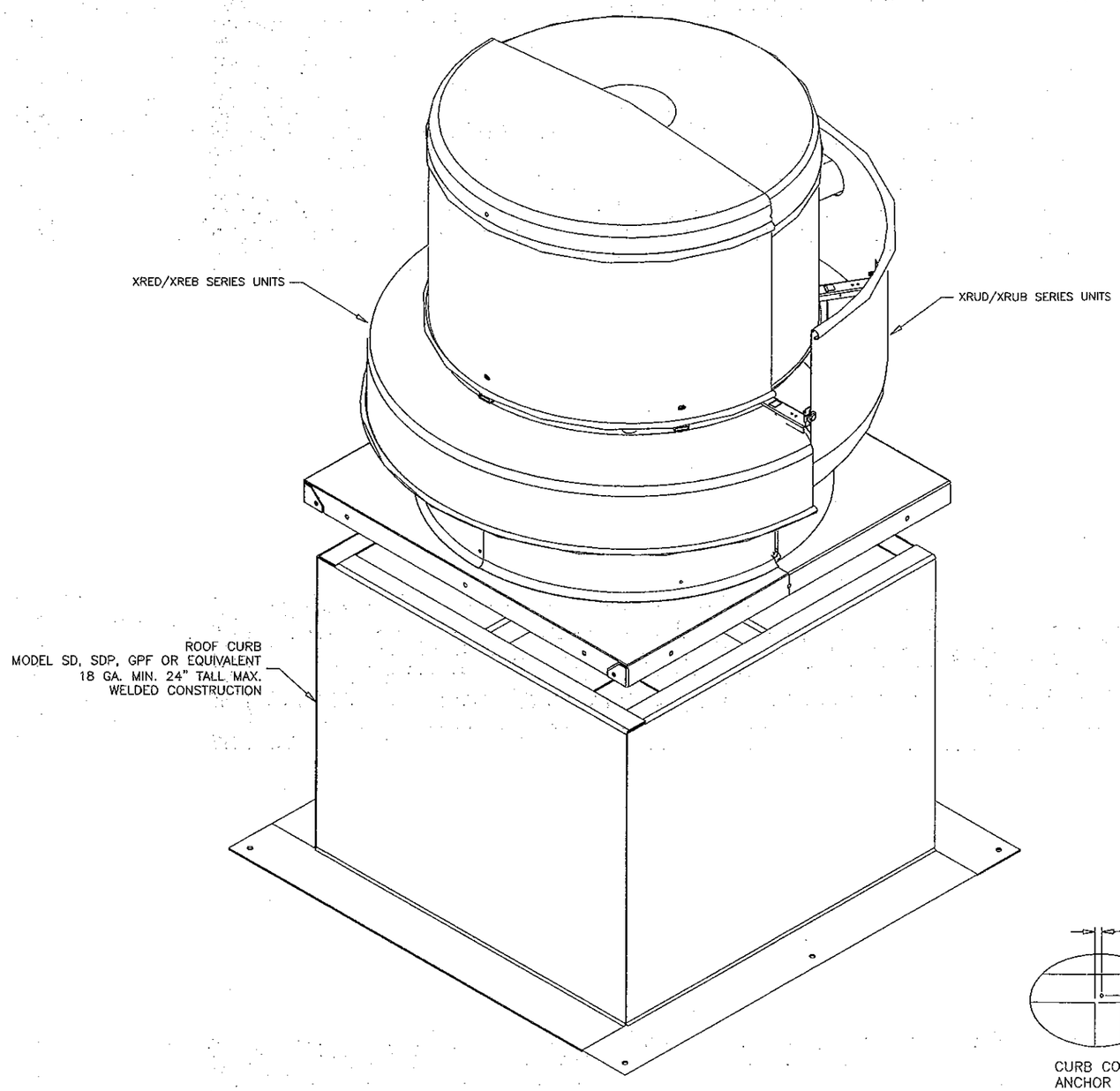

FAN TO CURB MOUNTING

UNIT SIZE	FASTENERS PER SIDE
XRUD-060-065-070-075-080-085-090-095-098-099-101-121-131-141/HP-161/HP XRUB-098-099-101/HP-121-131-141/HP-161/HP/XP XRED-060-065-070-075-080-085-090-095-097-098-099-101-103/HP-121-123-131-133 141-143/HP-163/HP XREB-071-081-091-101/HP-121-131-141/HP-161/HP	3
XRUD-180/HP-200 XRUB-180/HP-200/HP-220/HP-240/HP/XP XRED-150-160-170-180-183/HP-203 XREB-180/HP-200/HP-220/HP-240/HP	5
XREB-300/HP/XP XREB-260-300/HP	9

FASTENERS ON EACH SIDE OF THE FAN ARE TO BE INSTALLED WITH ONE FASTENER 4 INCHES FROM EACH EDGE AND ONE FASTENER CENTERED. THE FASTENERS ARE TO BE EQUALLY SPACED. 5/16 INCH SELF-DRILLING SCREWS.

CURB TO DECK MOUNTING

UNIT SIZE	CONCRETE ANCHORING NO. OF FASTENERS PER SIDE	STEEL DECK ANCHORING NO. OF FASTENERS PER SIDE	TIMBER ANCHORING NO. OF FASTENERS PER SIDE
XRUD/XRUB ≤ 161 XRED/XREB ≤ 141	2	2	2
XRUD/XRUB > 161 XRED/XREB > 141	3	3	3

FASTENERS NEED TO BE LOCATED ON 2 OPPOSITE ENDS OF FAN CURB.

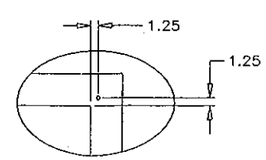

CURB CORNER ANCHOR DETAIL

PRODUCT REVISED
as complying with the Florida Building Code
Acceptance No 11-0802.08
Expiration Date 09/23/2014
By
Miami Dade Product Control

L. DAVID RICE
LICENSE
No. 50923
Exp. 2/28/2013
STATE OF FLORIDA
PROFESSIONAL ENGINEER

July 14, 2011

RICE ENGINEERING
105 School Creek Trail
Luxemburg, WI 54217
Phone: 920.845.1042
Fax: 920.845.1048
www.rice-inc.com

Florida Firm No: F-01000005061
Certificate of Authorization: #9090
L. David Rice
Registration No: 50923

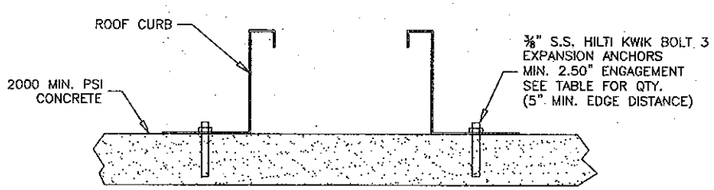

CONCRETE DECK ANCHORING

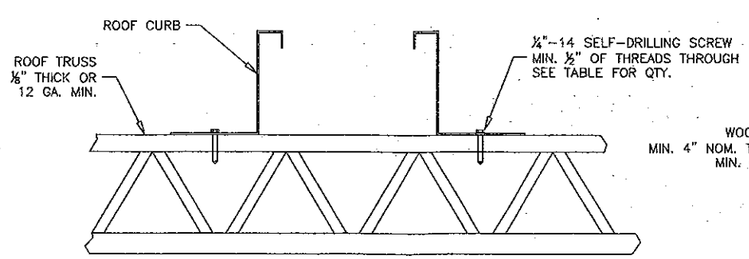

STEEL ANCHORING

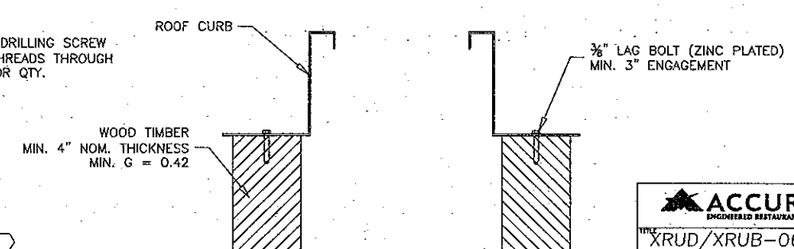

TIMBER ANCHORING

ACCUREX
ENGINEERED RESTAURANT SYSTEMS

DRAWN BY	YAKLOVICH
DATE	02/09/2010
SCALE	1/4.5
CAD DRAWING NO.	HSA4007

TITLE: XRUD/XRUB-060-300
XRED/XREB-060-300
CURB MOUNTING
SHEET 7 OF 7