MIAMI-DADE COUNTY
DEPARTMENT OF PERMITTING, ENVIRONMENT, AND REGULATORY AFFAIRS (PERA)
BOARD AND CODE ADMINISTRATION DIVISION

MIAMI-DADE COUNTY
PRODUCT CONTROL SECTION
11805 SW 26 Street, Room 208
Miami, Florida 33175-2474
T (786) 315-2590 F (786) 315-2599
www.miamidade.gov/building

NOTICE OF ACCEPTANCE (NOA)

Easy Awning Systems, Inc.
2766 S. Douglas Road
Miami, Florida 33166

SCOPE:
This NOA is being issued under the applicable rules and regulations governing the use of construction materials. The documentation submitted has been reviewed and accepted by Miami-Dade County PERA-Product Control Section to be used in Miami Dade County and other areas where allowed by the Authority Having Jurisdiction (AHJ).

This NOA shall not be valid after the expiration date stated below. The Miami-Dade County Product Control Division (In Miami Dade County) and/or the AHJ (in areas other than Miami Dade County) reserve the right to have this product or material tested for quality assurance purposes. If this product or material fails to perform in the accepted manner, the manufacturer will incur the expense of such testing and the AHJ may immediately revoke, modify, or suspend the use of such product or material within their jurisdiction. PERA reserves the right to revoke this acceptance, if it is determined by Miami-Dade County Product Control Section that this product or material fails to meet the requirements of the applicable building code.

This product is approved as described herein, and has been designed to comply with the High Velocity Hurricane Zone of the Florida Building Code.

DESCRIPTION: **Aluminum and Canvas Awning**

APPROVAL DOCUMENT: Drawing No. EA-01, titled " Layze Shade – Series 001 ", prepared by Eastern Engineering Group, last revision #1, dated December 06, 2011, signed and sealed by Raissa R. Lopez, P.E., on December 06, 2011, bearing the Miami-Dade County Product Control Approval stamp with the Notice of Acceptance number and the approval date by the Miami-Dade County Product Control Section.

MISSILE IMPACT RATING: **None**

LABELING: Each awning shall bear a permanent label with the manufacturer's name or logo, city, state and the following statement: "Miami-Dade County Product Control Approved", unless otherwise noted herein.

RENEWAL of this NOA shall be considered after a renewal application has been filed and there has been no change in the applicable building code negatively affecting the performance of this product.

TERMINATION of this NOA will occur after the expiration date or if there has been a revision or change in the materials, use, and/or manufacture of the product or process. Misuse of this NOA as an endorsement of any product, for sales, advertising or any other purposes shall automatically terminate this NOA. Failure to comply with any section of this NOA shall be cause for termination and removal of NOA.

ADVERTISEMENT: The NOA number preceded by the words Miami-Dade County, Florida, and followed by the expiration date may be displayed in advertising literature. If any portion of the NOA is displayed, then it shall be done in its entirety.

INSPECTION: A copy of this entire NOA shall be provided to the user by the manufacturer or its distributors and shall be available for inspection at the job site at the request of the Building Official.

This NOA consists of this page 1, evidence submitted page E-1 as well as approval document mentioned above. The submitted documentation was reviewed by **Helmy A. Makar, P.E., M.S.**

MIAMI-DADE COUNTY APPROVED

Helmy A. Makar
12/15/2011

NOA No. 11-0822.10
Expiration Date: 12/15/2016
Approval Date: 12/15/2011

Easy Awning Systems, Inc.

NOTICE OF ACCEPTANCE: EVIDENCE SUBMITTED

A. DRAWINGS

1. *Drawing No. EA-01, titled " Layze Shade – Series 001 ", prepared by Eastern Engineering Group, last revision #1, dated December 06, 2011, signed and sealed by Raissa R. Lopez, P.E., on December 06, 2011.*

B. TESTS

1. *None.*

C. CALCULATIONS

1. *Calculations titled "Layze Shade Series 001 Awning Aluminum frame", prepared by eastern Engineering Group, dated August 17, 2011, 75 sheets, signed and sealed by Gonzalo A. Paz, P.E.*

D. QUALITY ASSURANCE

1. *By Miami-Dade County Department of Permitting, Environment, and Regulatory Affairs (PERA).*

E. MATERIAL CERTIFICATIONS

1. *None.*

Helmy A. Makar, P.E., M.S.
PERA, Product Control Unit Supervisor
NOA No. 11-0822.10
Expiration Date: 12/15/2016
Approval Date: 12/15/2011

LAYZE SHADE - SERIES 001

ALUMINUM AND FABRIC AWNING

TABLE OF CONTENTS

SHEET	REVISION	SHEET DESCRIPTION
EA-01		GENERAL NOTES, INSTALLATION NOTES, TABLE OF CONTENTS, BILL OF MATERIALS AND COMPONENTS
EA-02		ISOMETRICS
EA-03		ISOMETRICS
EA-04		ELEVATIONS
EA-05		ELEMENTS 001 AND 002
EA-06		ELEMENTS 003 AND 005
EA-07		ELEMENTS 006 AND 007
EA-08		ELEMENTS 008 AND 009
EA-09		ELEMENTS 010 TO 012

NOTE:

1- THIS PRODUCT HAS BEEN DESIGNED TO COMPLY WITH THE REQUIREMENTS OF THE FLORIDA BUILDING CODE 2007 EDITION, UNDER THE FOLLOWING CONDITIONS:

-BASIC WIND SPEED OF 90 MPH. (FOR WIND EVENTS GREATER THAN 90 MPH, FABRIC CANVAS SHALL BE REMOVED)
-MAXIMUM STRUCTURE HEIGHT TO WHERE AWNING IS ATTACHED IS 120 FEET.

- ANCHORS SHALL BE AS LISTED ON BILL OF MATERIALS. QUANTITIES AS SHOWN ON DETAILS. EMBEDMENT TO BASE MATERIAL SHALL BE BEYOND WALL COVERING (STUCCO, TILE ETC.).

- ANCHORING CONDITIONS OTHER THAN THOSE SHOWN ON THESE DETAILS ARE NOT PART OF THIS APPROVAL.

- MATERIALS INCLUDING BUT NOT LIMITED TO STEEL/METAL SCREWS, THAT COME INTO CONTACT WITH OTHER DISSIMILAR MATERIALS SHALL MEET THE REQUIREMENTS OF 2007 FLORIDA BLDG. CODE SECTION 2003.8.4.

BILL OF MATERIALS

NO	DESCRIPTION	NOTES	QUANTITY
001	WALL MOUNT	ALUMINUM ALLOY 6061-T6	1
002	MOUNT MALE	ALUMINUM ALLOY 6061-T6	3
003	MOUNT FEMALE	ALUMINUM ALLOY 6061-T6	3
004	¼ MACHINE SCREW	BOLT WITH NUT - ALUMINUM ALLOY 7075-T73 28 UNF	14
005	AWNING MAIN EXTRUSION	ALUMINUM ALLOY 6061-T6	3
006	PLASTIC CLIP	ALUMINUM ALLOY 6061-T6	6
007	PIPE SUPPORT	ALUMINUM ALLOY 6061-T6	3
008	CROSS BAR	ALUMINUM ALLOY 6061-T6	1
009	PIPE BRACER EYES END	ALUMINUM ALLOY 6061-T6	4
010	PIPE BRACER EYES END	ALUMINUM ALLOY 6061-T6	4
011	PIPE BRACER	ALUMINUM ALLOY 6061-T6	2
012	PIPE BRACER DECK MOUNT	ALUMINUM ALLOY 6061-T6	2
013	ϕ¼" WALL ANCHORS	AGGRE-GATOR FASTENERS 300 SERIES STAINLESS STEEL ANCHORS BY ELCO	22
014	SCREWS	10-16 S.S KWIK-FLEX SCREWS by HILTI or APPROVED EQUAL	9

MAX. DESIGN PRESSURE RATING
+50/-50 PSF SHORT TERM
5 PSF DEAD LOAD

Approved as complying with the Florida Building Code
Date 12/15/2011
NOA# 11-0822.10
Miami Dade Product Control
By

RAISSA R. LOPEZ
LICENSE
No 59399
STATE OF FLORIDA
PROFESSIONAL ENGINEER

EASTERN ENGINEERING GROUP
3401 NW 82 AVE SUITE 370
Miami, Florida 33122
Tel. (305) 599-9133 Fax. (305) 599-8076
www.easternegg.com

REVISIONS		
No.	DESCRIPTION	DATE
1.	BCCD COMM.	12/6/11

JOB No. & NAME: 11 205
DESIGNED & DRAWN: Mario Morales
SCALE : AS SHOWN

LAYZE SHADE - SERIES 001
EASY AWNINGS
Address : 2266 DOUGLAS ROAD, MIAMI, FL 33133
Ph : 786-256-4564

☐ RAISSA R. LOPEZ, PE (Lic No-59399)
☐ GONZALO A. PAZ, PE (Lic No-60734)
CERT. OF AUTHORIZATION No. 26655

COPYRIGHT: THIS DRAWING IS THE PROPERTY OF EASTERN ENGINEERING GROUP. VERIFY AND BE RESPONSIBLE FOR ALL DIMENSIONS. DO NOT SCALE DRAWING. REPORT ANY ERRORS, OMISSIONS OR DISCREPANCIES TO EASTERN ENGINEERING GROUP. REPRODUCTION OR USE FOR OTHERS WITHOUT WRITTEN PERMISSION OF EASTERN ENGINEERING GROUP IS PROHIBITED. ONLY FULLY SIGNED AND SEALED COPIES AUTHORIZED BY EASTERN ENGINEERING GROUP ARE VALID. ELECTRONIC COPIES ARE NOT AUTHORIZED FOR STRUCTURAL REQUIREMENTS ONLY. CERT. # 26655.

12/6/11

EA-01

SHEET 1 OF 9

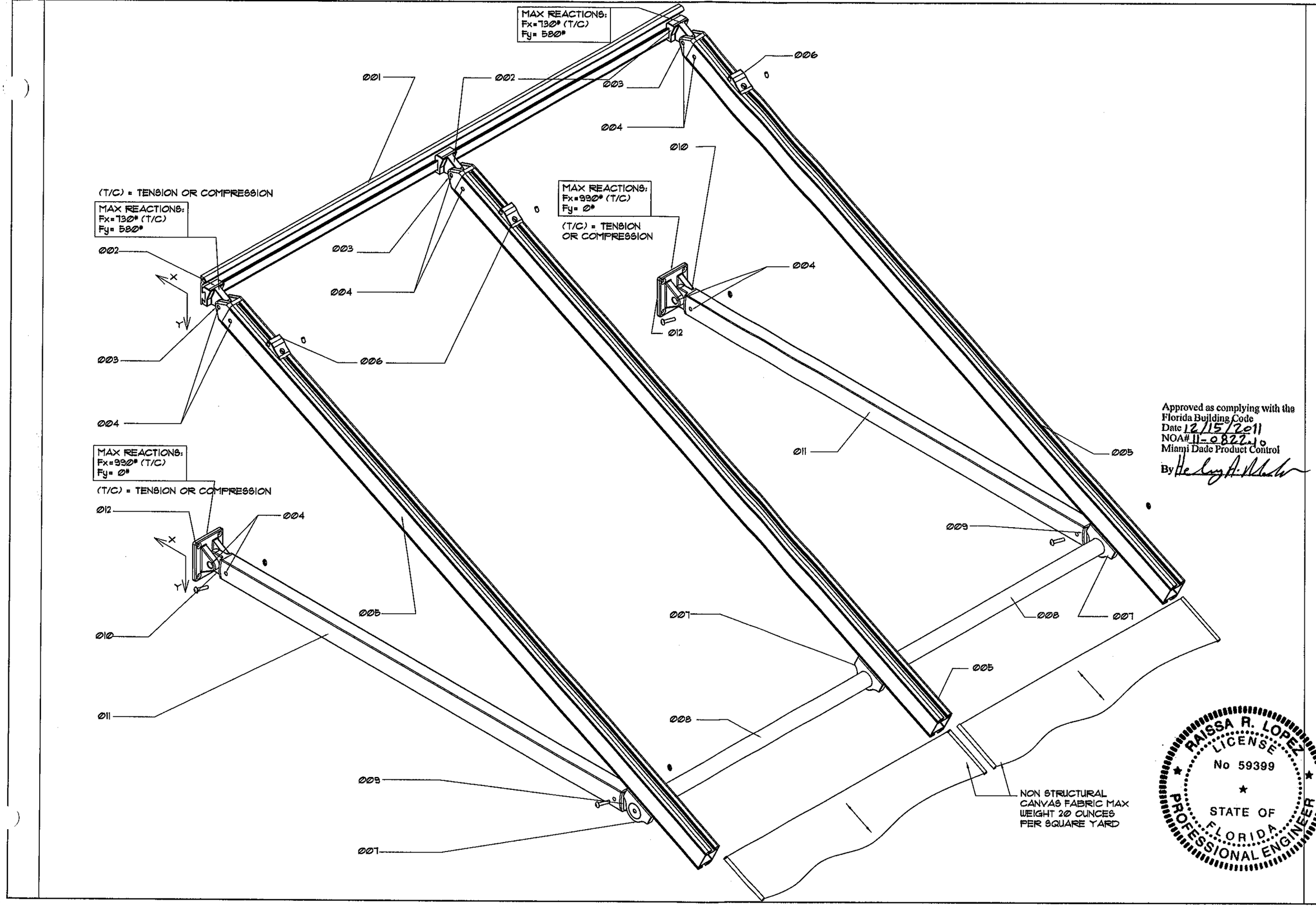

Approved as complying with the Florida Building Code
Date 12/15/2011
NOA# 11-0822.10
Miami Dade Product Control
By

EASTERN ENGINEERING GROUP
3401 NW 82 AVE SUITE 370
Miami, Florida 33122
Tel. (305) 599-8133 Fax. (305) 599-8076
www.easterneg.com

REVISIONS		
No.	DESCRIPTION	DATE
1.	BCCO COMM.	12/6/11

JOB No. & NAME: 11 205

DESIGNED & DRAWN: Mario Morales

SCALE : AS SHOWN

LAYZE SHADE - SERIES 001

EASY AWNINGS

Address : 2266 DOUGLAS ROAD, MIAMI, FL 33133

Ph : 786-256-4564

RAISSA R. LOPEZ, PE (Lic No-59399)
GONZALO A. PAZ, PE (Lic No-40734)
CERT. OF AUTHORIZATION No. 26625

COPYRIGHT AND DESIGN RIGHTS: THE COPYRIGHTS AND DESIGN RIGHTS IN THIS DRAWING ARE THE PROPERTY OF EASTERN ENGINEERING GROUP. REPRODUCTION OR DISCLOSURE TO THIRD PARTIES WITHOUT WRITTEN AUTHORIZATION BY EASTERN ENGINEERING GROUP IS PROHIBITED. DO NOT SCALE THE DRAWING. ANY ERRORS OR DISCREPANCIES MUST BE REPORTED TO EASTERN ENGINEERING GROUP WITHOUT DELAY. THE DOCUMENT MUST BE RETURNED ON REQUEST. ALL PRODUCTS OF EASTERN ENGINEERING GROUP, REPRODUCTION OR DISCLOSURE TO THIRD PARTIES WITHOUT WRITTEN AUTHORIZATION BY EASTERN ENGINEERING GROUP IS PROHIBITED. SHOP DRAWINGS, CRATED FOR STRUCTURAL REINFORCEMENT ONLY, NOT FOR PRICING.

12/6/11

EA-02

SHEET 2 OF 9

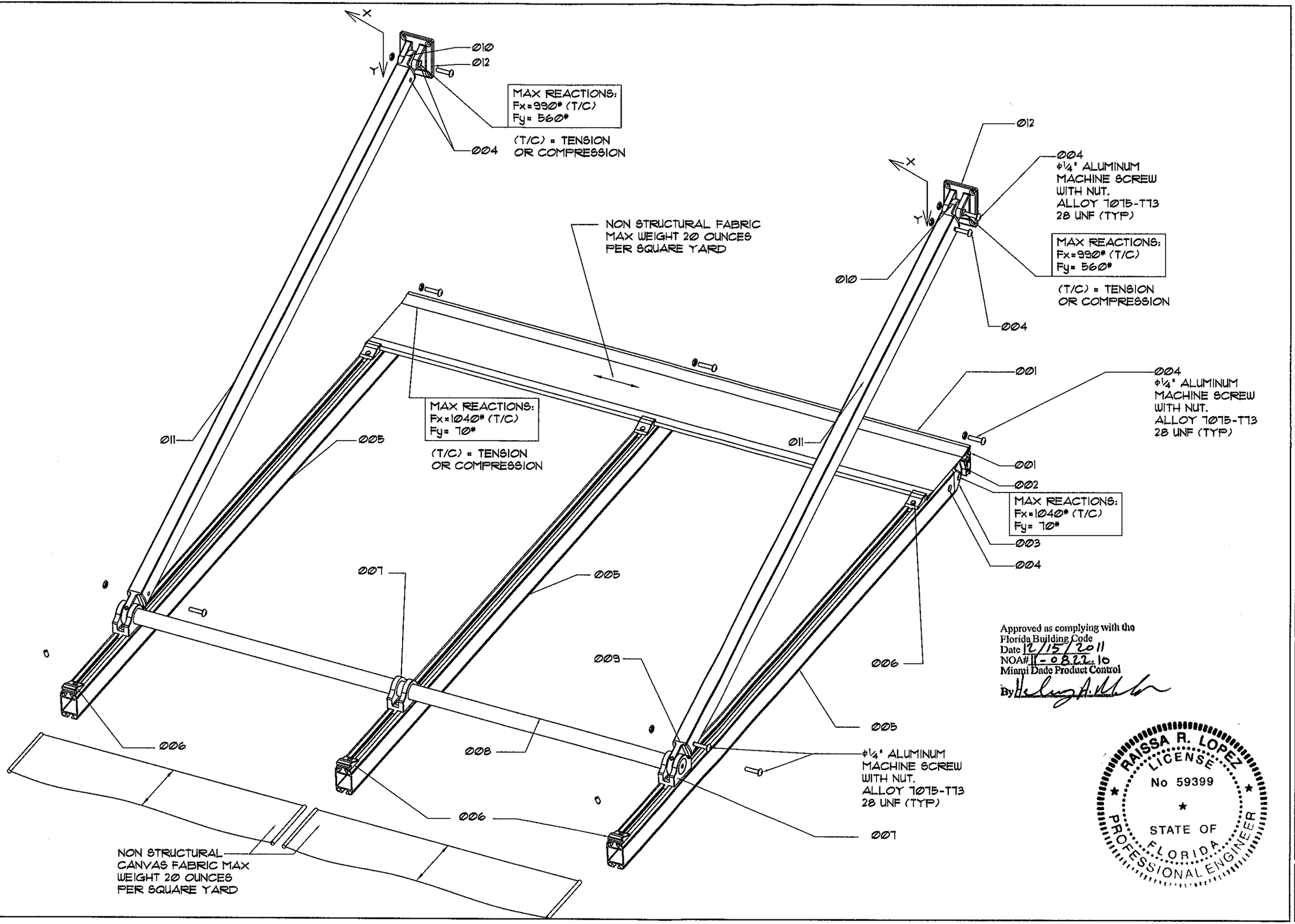

Approved as complying with the
Florida Building Code
Date 12/15/2011
NOA# 11-0822.10
Miami Dade Product Control
By [signature]

RAISSA R. LOPEZ
LICENSE
No 59399
STATE OF
FLORIDA
PROFESSIONAL ENGINEER

EASTERN ENGINEERING GROUP
3401 NW 82 AVE SUITE 370
Miami, Florida 33122
Tel. (305) 599-8133 Fax. (305) 599-8076
www.easterneg.com

REVISIONS		
No.	DESCRIPTION	DATE
1	BCCO COMM.	12/6/11

JOB No. & NAME: 11 205
DESIGNED & DRAWN: Mario Morales
SCALE : AS SHOWN

LAYZE SHADE - SERIES 001
EASY AWNINGS
Address : 2266 DOUGLAS ROAD, MIAMI, FL 33133
Ph : 786-256-4564

☐ RAISSA R. LOPEZ, PE (Lic No-59399)
☐ GONZALO A. PAZ, PE (Lic No-60734)
CERT. OF AUTHORIZATION No. 26655

12/6/11

EA-03
SHEET 3 OF 9

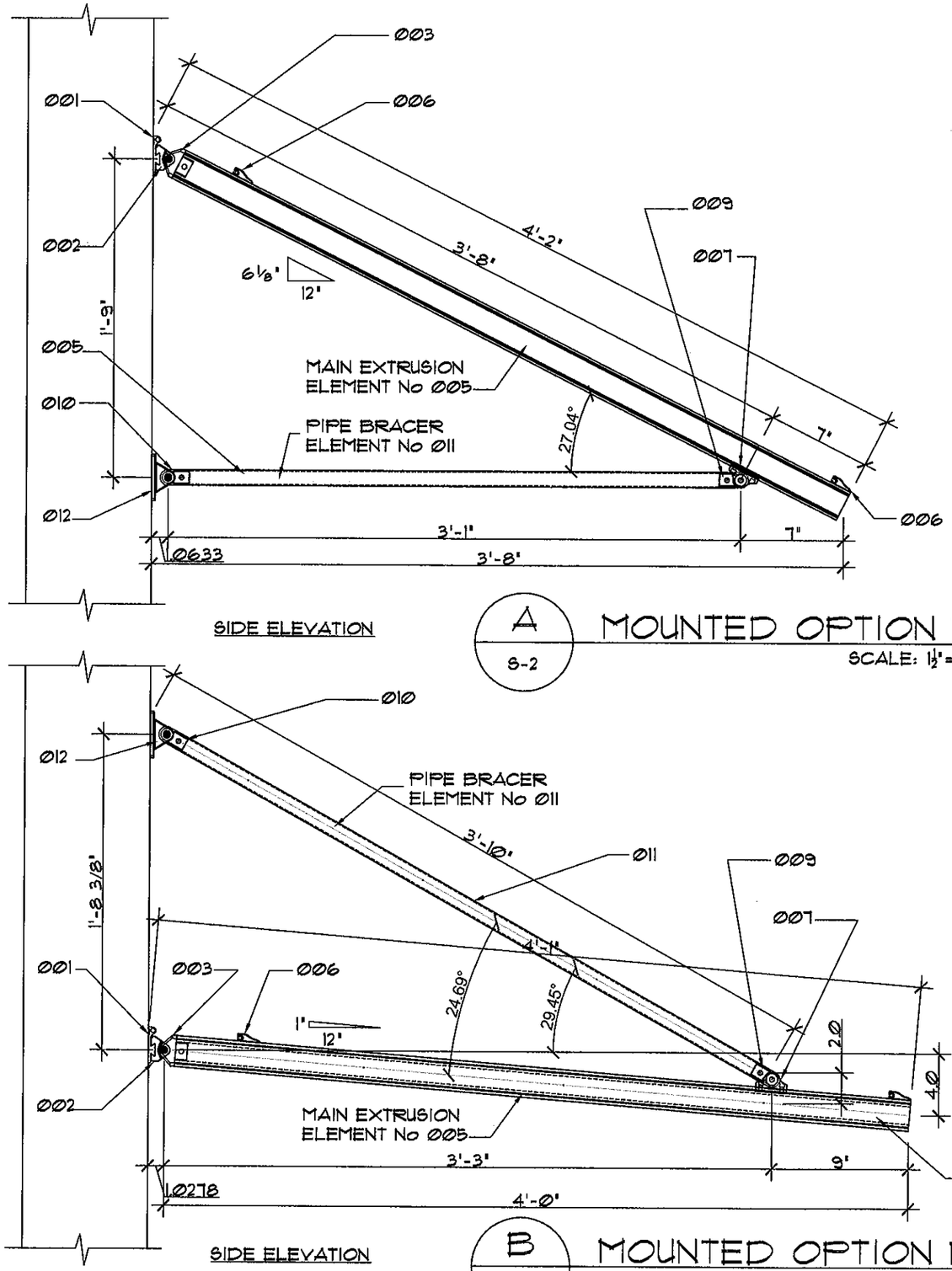

A
S-2
MOUNTED OPTION No 1
SCALE: 1½"=1'-0"

B
S-2
MOUNTED OPTION No 2
SCALE: 1½"=1'-0"

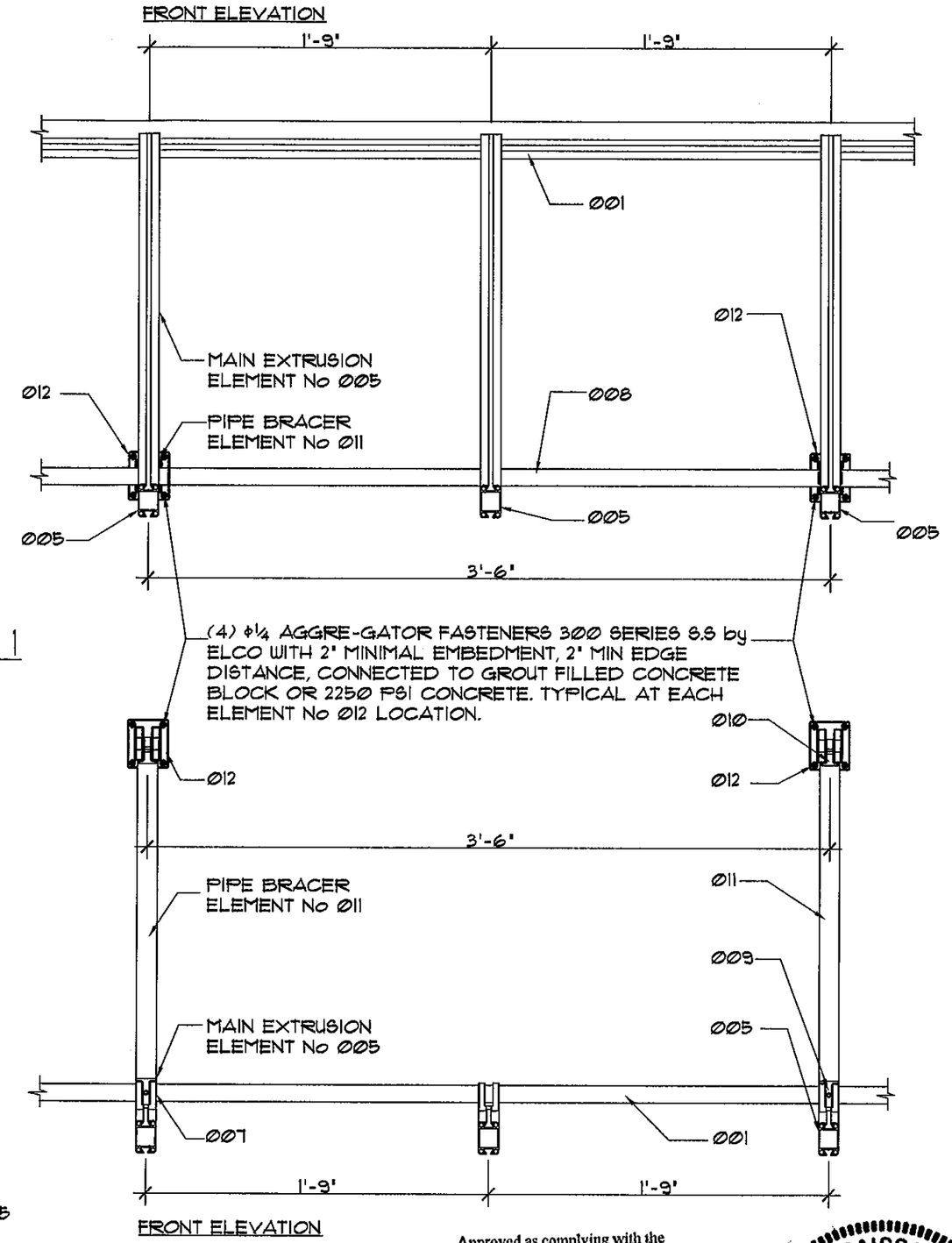

Approved as complying with the Florida Building Code
Date 12/15/2011
NOA# 11-0822.10
Miami Dade Product Control
By [signature]

RAISSA R. LOPEZ
LICENSE
No 59399
STATE OF FLORIDA
PROFESSIONAL ENGINEER

EASTERN ENGINEERING GROUP
3401 NW 82 AVE SUITE 370
Miami, Florida 33122
Tel. (305) 599-8133 Fax. (305) 599-8076
www.easterneg.com

REVISIONS		
No.	DESCRIPTION	DATE
1	BCCO COMM.	12/6/11

JOB No. & NAME: 11 205
DESIGNED & DRAWN: Mario Morales
SCALE: AS SHOWN

LAYZE SHADE - SERIES 001
EASY AWNINGS
Address: 2266 DOUGLAS ROAD, MIAMI, FL 33133
Ph: 786-256-4564

☐ RAISSA R. LOPEZ, PE (Lic No-59399)
☐ GONZALO A. PAZ, PE (Lic No-60734)
CERT. OF AUTHORIZATION No. 26655

COPYRIGHT RESERVED: THE CONTRACTOR SHALL VERIFY AND BE RESPONSIBLE FOR ALL DIMENSIONS. DO NOT SCALE THE DRAWING. ANY ERRORS OR OMISSIONS SHALL BE REPORTED TO EASTERN ENGINEERS GROUP WITHOUT DELAY. THE COPYRIGHTS TO ALL DESIGNS AND DRAWINGS ARE THE PROPERTY OF EASTERN ENGINEERS GROUP. REPRODUCTION OR USE FOR ANY PURPOSE OTHER THAN THAT AUTHORIZED BY EASTERN ENGINEERS GROUP IS PROHIBITED. SHOP DRAWINGS CHECKED FOR STRUCTURAL REQUIREMENTS ONLY CAN # 26655

12/6/11

EA-04

SHEET 4 OF 9

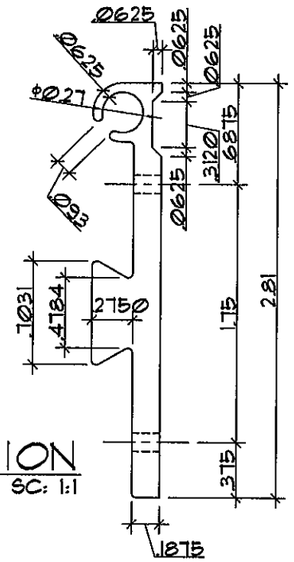

SECTION
SC: 1:1

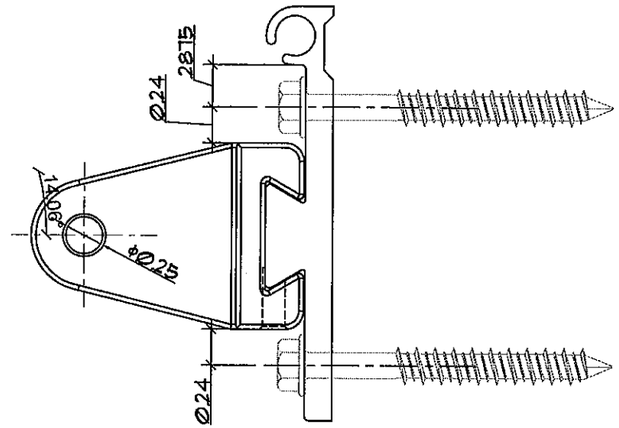

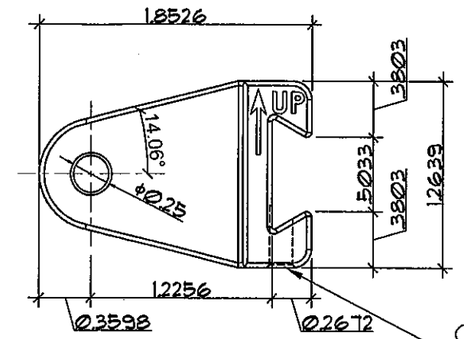

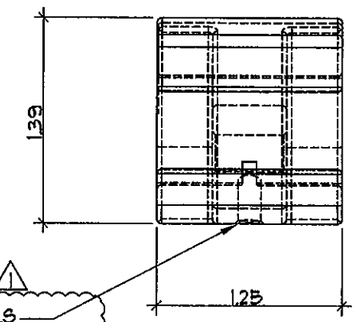

(1) S.S SOCKET SET SCREW ¼"-20 CONE POINT

FRONT VIEW
SC: 1:1

(2) φ¼" AGGRE-GATOR FASTENERS 300 SERIES S.S by ELCO WITH 2" MINIMAL EMBEDMENT, 2" MIN EDGE DISTANCE AND 1½" MIN SPACING, CONNECTED TO GROUT FILLED CONCRETE BLOCK OR 2250 PSI CONCRETE. TYPICAL AT EACH INTERMEDIATE ELEMENT No 002 LOCATION.

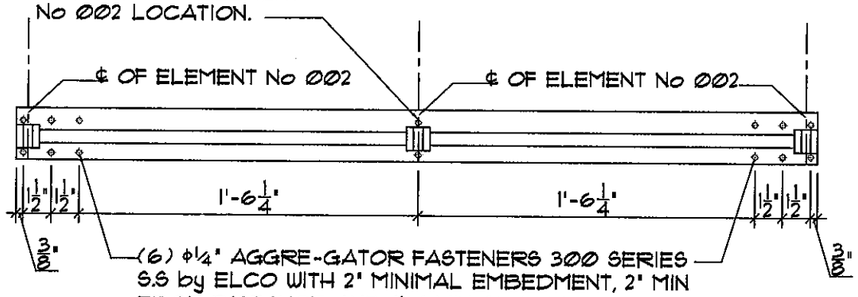

(6) φ¼" AGGRE-GATOR FASTENERS 300 SERIES S.S by ELCO WITH 2" MINIMAL EMBEDMENT, 2" MIN EDGE DISTANCE AND 1½" MIN SPACING, CONNECTED TO GROUT FILLED CONCRETE BLOCK OR 2250 PSI CONCRETE. TYPICAL AT EACH END ELEMENT No 002 LOCATION.

ELEVATION
SC: 1½:1

SIDE VIEW
SC: 1:1

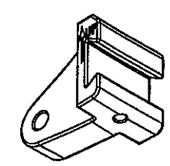

ISOMETRIC VIEW
N.T.S

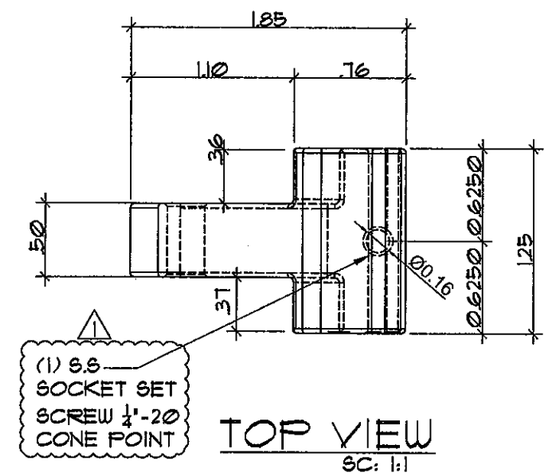

(1) S.S SOCKET SET SCREW ¼"-20 CONE POINT

TOP VIEW
SC: 1:1

001 MOUNT

002 MOUNT MALE

ALL DIMESIONS ARE IN INCHES

Approved as complying with the Florida Building Code
Date 12/15/2011
NOA# 11-0822.10
Miami Dade Product Control
By

RAISSA R. LOPEZ
LICENSE
No 59399
STATE OF FLORIDA
PROFESSIONAL ENGINEER

EASTERN ENGINEERING GROUP
3401 NW 82 AVE SUITE 370
Miami, Florida 33122
Tel. (305) 599-8133 Fax. (305) 599-8076
www.easternegg.com

REVISIONS		
No.	DESCRIPTION	DATE
1	BCCO COMM.	12/6/11

JOB No. & NAME: 11 205

DESIGNED & DRAWN: Mario Morales
SCALE : AS SHOWN

LAYZE SHADE - SERIES 001
EASY AWNINGS

Address : 2266 DOUGLAS ROAD, MIAMI, FL 33133
Ph : 786-256-4564

☐ RAISSA R. LOPEZ, PE (Lic No-59399)
☐ GONZALO A. PAZ, PE (Lic No-60734)
CERT. OF AUTHORIZATION No. 26855

COPYRIGHT RESERVED. THE CONTRACTOR SHALL VERIFY ALL DIMENSIONS AND CONDITIONS. DO NOT SCALE THE DRAWING. ANY ERRORS OR OMISSIONS SHALL BE REPORTED TO EASTERN ENGINEERING GROUP WITHOUT DELAY. THE COPYRIGHTS OF THESE DRAWINGS AND SPECIFICATIONS ARE THE PROPERTY OF EASTERN ENGINEERING GROUP. REPRODUCTION OR REVISION IS PROHIBITED WITHOUT WRITTEN CONSENT. AUTHORIZED BY EASTERN ENGINEERING GROUP. ONLY THOSE PRINTS BEARING THE ORIGINAL SEAL IS CONSIDERED "SHOP DRAWING, CERTIFIED FOR STRUCTURAL REQUIREMENTS ONLY" (AIA F 200)

12/6/11

EA-05

SHEET 5 OF 9

ALL DIMESIONS ARE IN INCHES

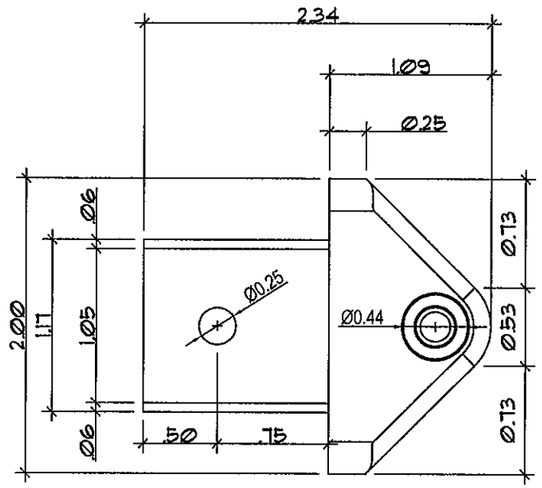

SIDE VIEW
SC: 1:1

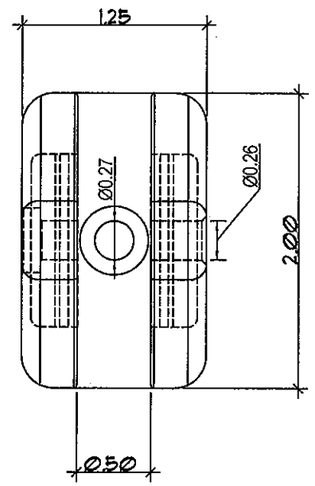

FRONT VIEW
SC: 1:1

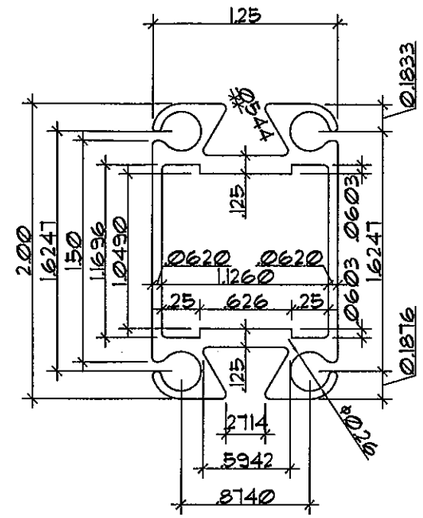

SECTION
SC: 1:1

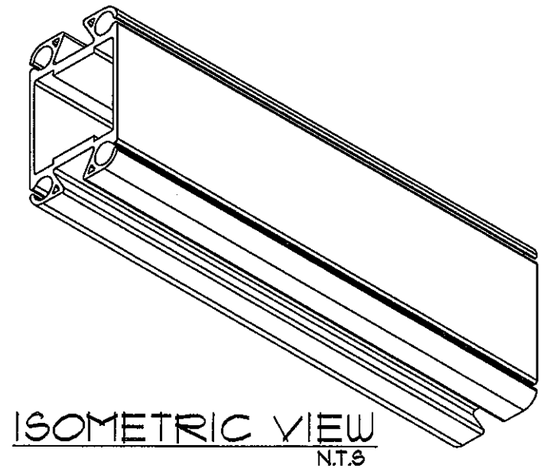

ISOMETRIC VIEW
N.T.S

Ø05 AWNING MAIN EXTRUSION

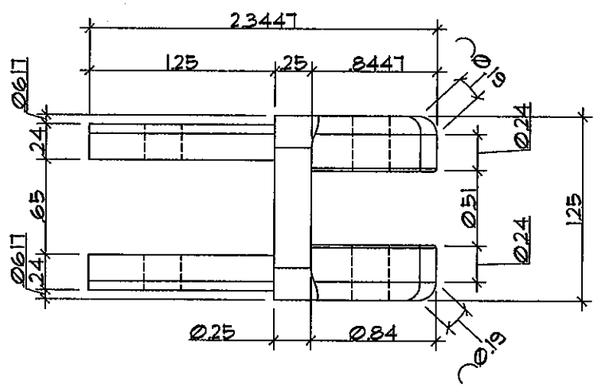

TOP VIEW
SC: 1:1

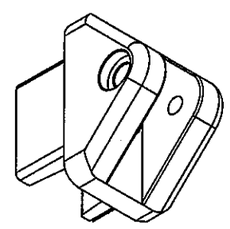

ISOMETRIC VIEW
N.T.S

Ø03 MOUNT FEMALE

Approved as complying with the
Florida Building Code
Date 12/15/2011
NOA# 11-0822.10
Miami Dade Product Control
By

RAISSA R. LOPEZ
LICENSE
No 59399
STATE OF FLORIDA
PROFESSIONAL ENGINEER

EASTERN ENGINEERING GROUP
3401 NW 82 AVE SUITE 370
Miami, Florida 33122
Tel. (305) 599-8133 Fax. (305) 599-8076
www.easterneg.com

REVISIONS		
No.	DESCRIPTION	DATE
1	BCSD COMM.	12/2/11

JOB No. & NAME: 11 205
DESIGNED & DRAWN: Mario Morales
SCALE : AS SHOWN

LAYZE SHADE - SERIES 001
EASY AWNINGS
Address : 2266 DOUGLAS ROAD, MIAMI, FL 33133
Ph : 786-256-4564

☐ RAISSA R. LOPEZ, PE (Lic No-59399)
☐ GONZALO A. PAZ, PE (Lic No-60734)
CERT. OF AUTHORIZATION No. 26655

COPYRIGHT RESERVED. THE CONTRACTOR SHALL VERIFY ALL DIMENSIONS, DATA AND DOCUMENTS TO NOT SCALE THE DRAWING. ANY ERRORS OR OMISSIONS SHALL BE REPORTED TO EASTERN ENGINEERING GROUP WITHOUT DELAY. THE COPYRIGHTS OF ALL DESIGNS AND DRAWINGS REMAIN PROPERTY OF EASTERN ENGINEERING GROUP. ANY REPRODUCTION, USE FOR ANY PURPOSE OTHER THAN THAT AUTHORIZED BY EASTERN ENGINEERING GROUP IS PROHIBITED. SHOP DRAWINGS, CHECKED FOR STRUCTURAL REQUIREMENTS ONLY CAN # 26655

12/6/11

EA-06
SHEET 6 OF 9

ALL DIMESIONS ARE IN INCHES

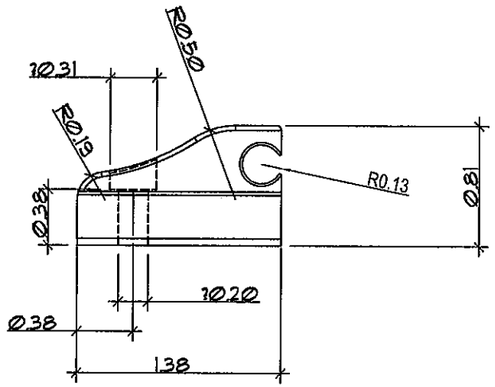

SIDE VIEW
SC: 1:1

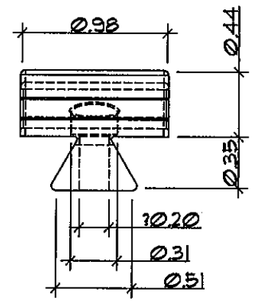

FRONT VIEW
SC: 1:1

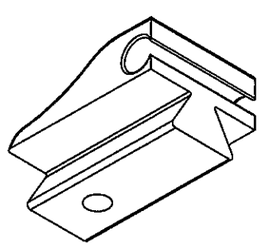

ISOMETRIC VIEW
N.T.S

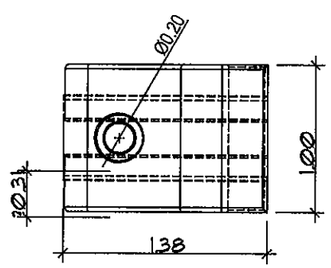

TOP VIEW
SC: 1:1

006 PLASTIC CLIP

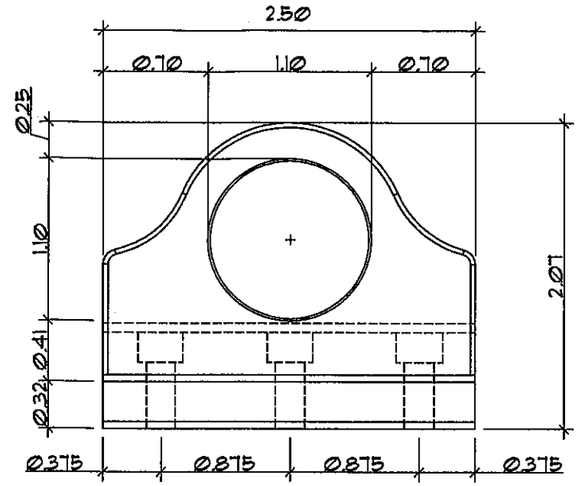

SIDE VIEW
SC: 1:1

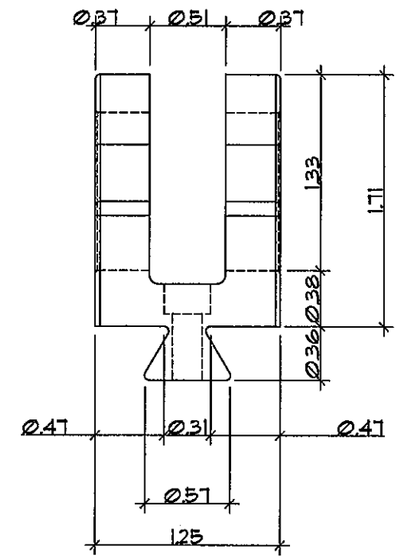

FRONT VIEW
SC: 1:1

(3) 10-16 KWIK-FLEX SCREWS by
HILTI or APPROVED EQUAL (TYP)

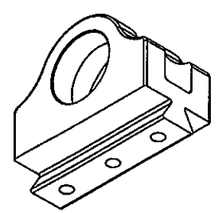

ISOMETRIC VIEW
N.T.S

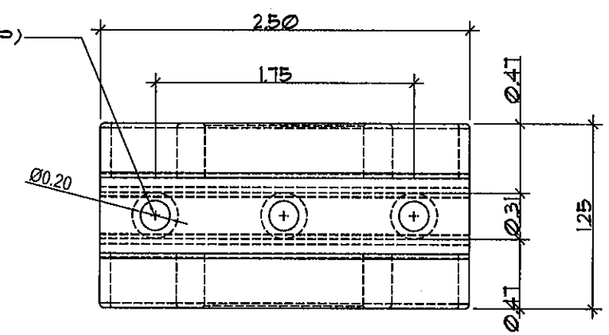

TOP VIEW
SC: 1:1

007 PIPE SUPPORT

Approved as complying with the
Florida Building Code
Date 12/15/2011
NOA# 11-0822.10
Miami Dade Product Control
By

RAISSA R. LOPEZ
LICENSE
No 59399
STATE OF FLORIDA
PROFESSIONAL ENGINEER

12/6/11

EASTERN ENGINEERING GROUP
3401 NW 82 AVE SUITE 370
Miami, Florida 33122
Tel. (305) 599-9133 Fax. (305) 599-8076
www.easterneg.com

REVISIONS		
No.	DESCRIPTION	DATE
1.	BCCO COMM.	12/2/11

JOB No. & NAME: 11 205
DESIGNED & DRAWN: Mario Morales
SCALE : AS SHOWN

LAYZE SHADE - SERIES 001
EASY AWNINGS
Address : 2266 DOUGLAS ROAD, MIAMI, FL 33133
Ph : 786-256-4564

RAISSA R. LOPEZ, PE (Lic No-59399)
GONZALO A. PAZ, PE (Lic No-60724)
CERT. OF AUTHORIZATION No. 26635

COPYRIGHT AND OWNERSHIP: THE COPYRIGHTS TO THESE DRAWINGS, DESIGNS AND SPECIFICATIONS ARE THE PROPERTY OF EASTERN ENGINEERING GROUP. REPRODUCTION OR PUBLICATION IN WHOLE OR IN PART WITHOUT AUTHORIZED BY EASTERN ENGINEERING GROUP IS PROHIBITED. SHOP DRAWINGS, CERTIFIED STRUCTURAL DRAWINGS ARE NOT A PART.

EA-07
SHEET 7 OF 9

ALL DIMESIONS ARE IN INCHES

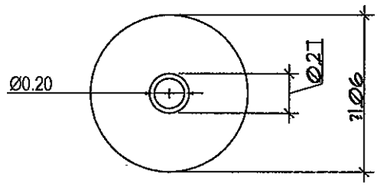

SECTION
SC: 1:1

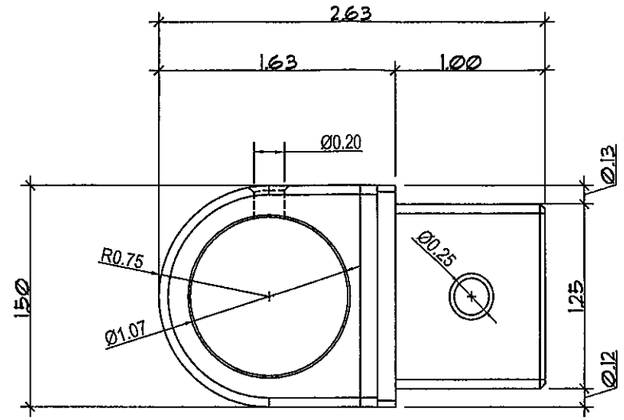

SIDE SECTION
SC: 1:1

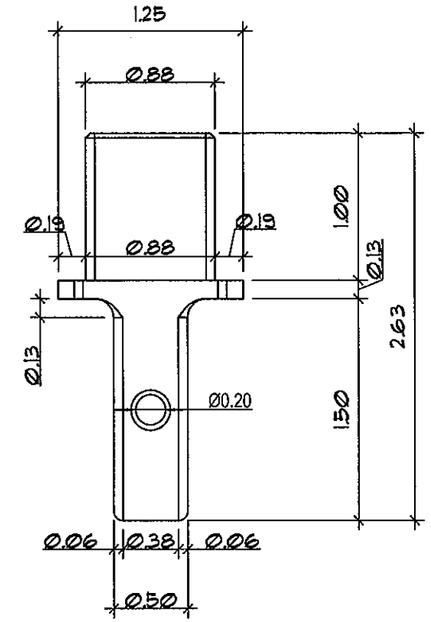

TOP VIEW
SC: 1:1

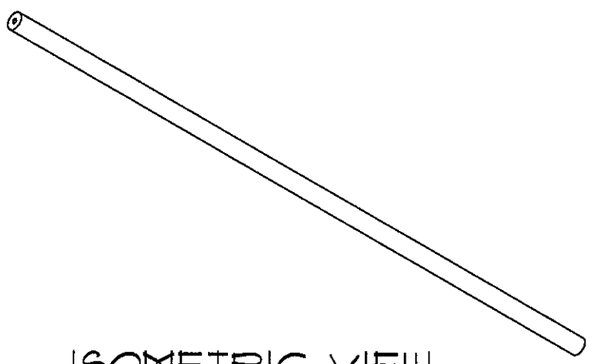

ISOMETRIC VIEW
N.T.S

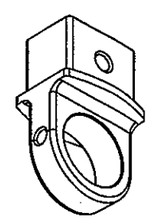

ISOMETRIC VIEW
N.T.S

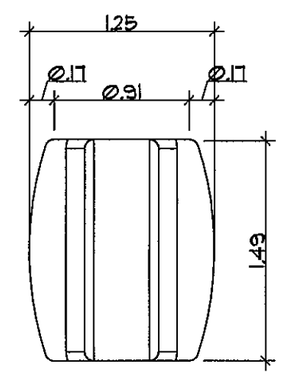

BOTTOM VIEW
SC: 1:1

Approved as complying with the Florida Building Code
Date 12/15/2011
NOA# 11-0822.10
Miami Dade Product Control
By [signature]

Ø08 CROSS BAR

Ø09 PIPE BRACER EYES END

RAISSA R. LOPEZ
LICENSE
No 59399
STATE OF FLORIDA
PROFESSIONAL ENGINEER

12/6/11

EASTERN ENGINEERING GROUP
3401 NW 82 AVE SUITE 370
Miami, Florida 33122
Tel. (305) 599-8133 Fax. (305) 599-8076
www.easterneg.com

REVISIONS

No.	DESCRIPTION	DATE
1	BCCO COMM.	12/2/11

JOB No. & NAME: 11 205
DESIGNED & DRAWN: Mario Morales
SCALE : AS SHOWN

LAYZE SHADE - SERIES 001
EASY AWNINGS
Address : 2266 DOUGLAS ROAD, MIAMI, FL 33133
Ph : 786-256-4564

☐ RAISSA R. LOPEZ, PE (Lic No-59399)
☐ GONZALO A. PAZ, PE (Lic No-60734)
CERT. OF AUTHORIZATION No. 26655

COPYRIGHT RESERVED. THE CONTRACTOR SHALL VERIFY AND BE RESPONSIBLE FOR ALL DIMENSIONS. DO NOT SCALE THE DRAWING. ANY DISCREPANCIES SHALL BE REPORTED TO EASTERN ENGINEERING GROUP WITHOUT DELAY. THE COPYRIGHTS TO ALL DESIGNS AND DRAWINGS ARE THE PROPERTY OF EASTERN ENGINEERING GROUP. REPRODUCTION OR USE FOR ANY PURPOSE OTHER THAN THAT AUTHORIZED BY EASTERN ENGINEERING GROUP IS PROHIBITED. SHOP DRAWINGS CHECKED FOR STRUCTURAL REQUIREMENTS ONLY. CAN # 26655

EA-08

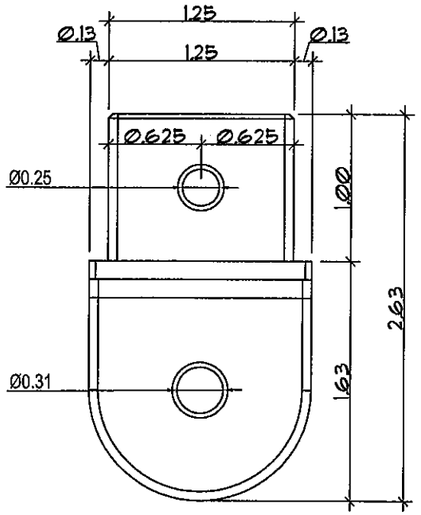

SIDE VIEW
SC: 1:1

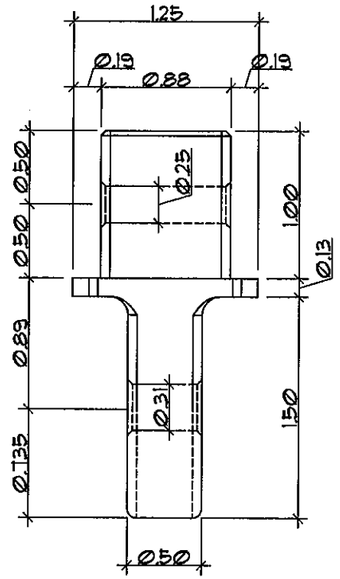

TOP VIEW
SC: 1:1

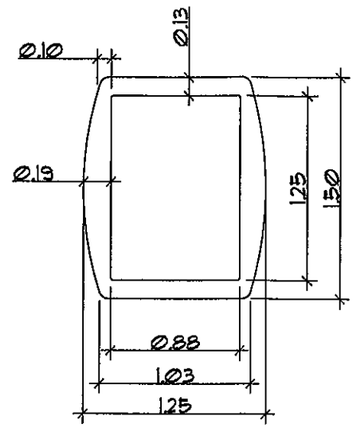

SECTION
SC: 1:1

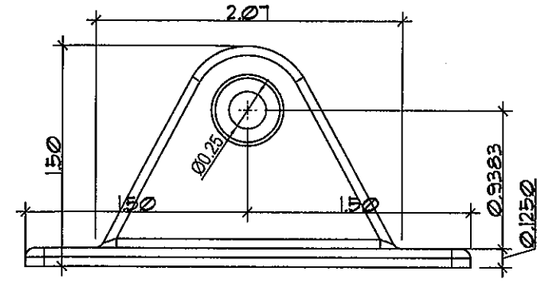

SIDE
SC: 1:1

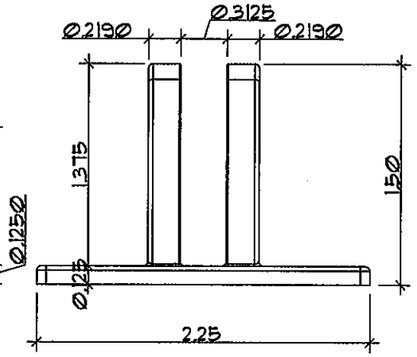

FRONT VIEW
SC: 1:1

(4) Φ¼ AGGRE-GATOR FASTENERS 300 SERIES S.S by ELCO WITH 2" MINIMAL EMBEDMENT, 2" MIN EDGE DISTANCE, CONNECTED TO GROUT FILLED CONCRETE BLOCK OR 2250 PSI CONCRETE. TYPICAL AT EACH ELEMENT No Ø12 LOCATION.

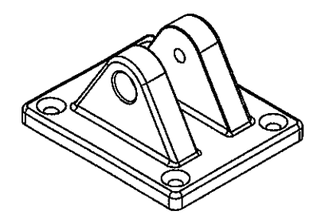

ISOMETRIC VIEW
N.T.S

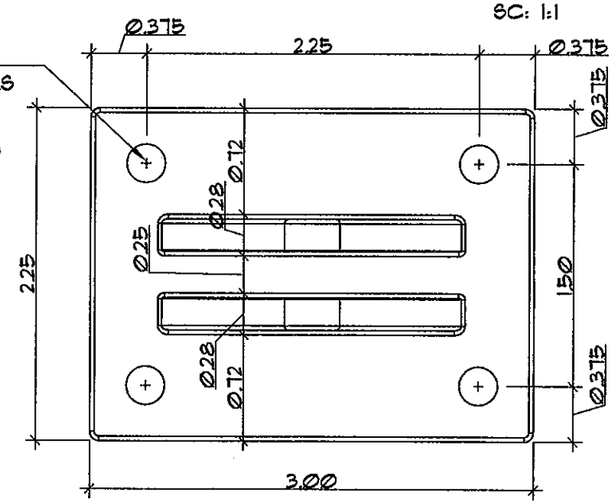

TOP VIEW
SC: 1:1

Ø12 PIPE BRACER DECK MOUNT

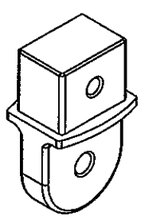

ISOMETRIC VIEW
N.T.S

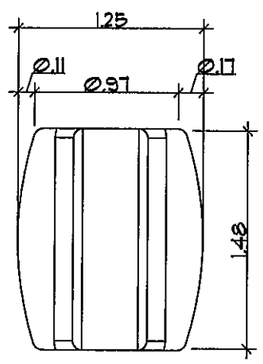

TOP VIEW
SC: 1:1

Ø10 PIPE BRACER EYES END

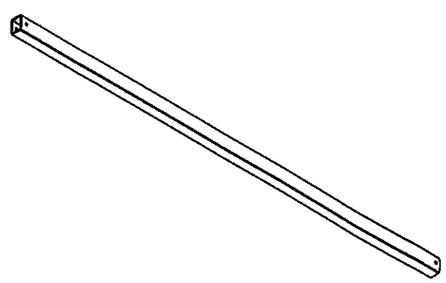

ISOMETRIC VIEW
N.T.S

Ø11 PIPE BRACER

ALL DIMESIONS ARE IN INCHES

Approved as complying with the Florida Building Code
Date 12/15/2011
NOA# 11-0822.10
Miami Dade Product Control
By [signature]

RAISSA R. LOPEZ
LICENSE
No 59399
STATE OF FLORIDA
PROFESSIONAL ENGINEER

EASTERN ENGINEERING GROUP
3401 NW 82 AVE SUITE 370
Miami, Florida 33122
Tel. (305) 599-8133 Fax. (305) 599-8076
www.easternegg.com

REVISIONS		
No.	DESCRIPTION	DATE
1	BCCO COMM.	12/2/11

JOB No. & NAME: 11 205
DESIGNED & DRAWN: Mario Morales
SCALE: AS SHOWN

LAYZE SHADE - SERIES 001
EASY AWNINGS
Address: 2266 DOUGLAS ROAD, MIAMI, FL 33133
Ph: 786-256-4564

☐ RAISSA R. LOPEZ, PE (Lic No-59399)
☐ GONZALO A. PAZ, PE (Lic No-60734)
CERT. OF AUTHORIZATION No. 26655

COPYRIGHT RESERVED: THE CONTRACTOR SHALL VERIFY AND BE RESPONSIBLE FOR ALL DIMENSIONS. DO NOT SCALE THE DRAWING. ANY ERRORS OR OMISSIONS SHALL BE REPORTED TO EASTERN ENGINEERING GROUP WITHOUT DELAY. THE COPYRIGHTS TO ALL DESIGNS AND DRAWINGS ARE THE PROPERTY OF EASTERN ENGINEERING GROUP. REPRODUCTION OR USE FOR ANY PURPOSE OTHER THAN THAT AUTHORIZED BY EASTERN ENGINEERING GROUP IS PROHIBITED. SHOP DRAWINGS CHECKED FOR STRUCTURAL REQUIREMENTS ONLY CAN # 26655

12/6/11

EA-09

SHEET 9 OF 9