MIAMI-DADE COUNTY
DEPARTMENT OF PERMITTING, ENVIRONMENT, AND REGULATORY AFFAIRS (PERA)
BOARD AND CODE ADMINISTRATION DIVISION

NOTICE OF ACCEPTANCE (NOA)

MIAMI-DADE COUNTY
PRODUCT CONTROL SECTION
11805 SW 26 Street, Room 208
Miami, Florida 33175-2474
T (786) 315-2590 F (786) 315-2599
www.miamidade.gov/pera/

E.S. Windows, LLC
10653 NE Quaybridge Ct.
Miami, Fl.33138

SCOPE:

This NOA is being issued under the applicable rules and regulations governing the use of construction materials. The documentation submitted has been reviewed and accepted by Miami-Dade County PERA -Product Control Section to be used in Miami Dade County and other areas where allowed by the Authority Having Jurisdiction (AHJ).

This NOA shall not be valid after the expiration date stated below. The Miami-Dade County Product Control Section (In Miami Dade County) and/or the AHJ (in areas other than Miami Dade County) reserve the right to have this product or material tested for quality assurance purposes. If this product or material fails to perform in the accepted manner, the manufacturer will incur the expense of such testing and the AHJ may immediately revoke, modify, or suspend the use of such product or material within their jurisdiction. PERA reserves the right to revoke this acceptance, if it is determined by Miami-Dade County Product Control Section that this product or material fails to meet the requirements of the applicable building code.
This product is approved as described herein, and has been designed to comply with the Florida Building Code, including the High Velocity Hurricane Zone.

DESCRIPTION: Series 6000 Aluminum Sliding Glass Doors w/wo Reinforcements-L.M.I.

APPROVAL DOCUMENT: Drawing No. **W11-41**, titled "Series- 6000 Alum SLD. Glass Door (L.M.I.)", sheets 1 through 13 of 13, prepared by AL-Farooq Corporation, dated 07/22/11 and last revised on JAN 06, 2012, signed and sealed by Javad Ahmad, P.E., bearing the Miami-Dade County Product Control Approval stamp with the Notice of Acceptance number and approval date by the Miami-Dade County Product Control Section.

MISSILE IMPACT RATING: Large and Small Missile Impact Resistant

Limitation:

1. See Design Pressure (DP) tables in sheet 3, 4 and 5 with applicable reinforcing required at interlock & astragal. Also see approved configurations in sheet 2.

LABELING: Each unit shall bear a permanent label with the manufacturer's name or logo, city, state and series and following statement: "Miami-Dade County Product Control Approved", unless otherwise noted herein.

RENEWAL of this NOA shall be considered after a renewal application has been filed and there has been no change in the applicable building code negatively affecting the performance of this product.

TERMINATION of this NOA will occur after the expiration date or if there has been a revision or change in the materials, use, and/or manufacture of the product or process. Misuse of this NOA as an endorsement of any product, for sales, advertising or any other purposes shall automatically terminate this NOA. Failure to comply with any section of this NOA shall be cause for termination and removal of NOA.

ADVERTISEMENT: The NOA number preceded by the words Miami-Dade County, Florida, and followed by the expiration date may be displayed in advertising literature. If any portion of the NOA is displayed, then it shall be done in its entirety.

INSPECTION: A copy of this entire NOA shall be provided to the user by the manufacturer or its distributors and shall be available for inspection at the job site at the request of the Building Official.
This NOA and consists of this page 1 and evidence pages E-1, as well as approval document mentioned above.
The submitted documentation was reviewed by **Ishaq I. Chanda, P.E.**

MIAMI-DADE COUNTY APPROVED

1/12/12

NOTICE OF ACCEPTANCE: EVIDENCE SUBMITTED

A. DRAWINGS

1. Manufacturer's die drawings and sections.
2. Drawing No. **W11-41**, titled "Series- 6000 Alum SLD. Glass Door (L.M.I.)", sheets 1 through 13 of 13, prepared by AL-Farooq Corporation, dated 07/22/11 and last revised on JAN 06, 2012, signed and sealed by Javad Ahmad, P.E.

B. TESTS

1. Test reports on: 1) Air Infiltration Test, per FBC, TAS 202-94
   2) Uniform Static Air Pressure Test, Loading per FBC TAS 202-94
   3) Water Resistance Test, per FBC, TAS 202-94
   4) Large Missile Impact Test per FBC, TAS 201-94
   5) Cyclic Wind Pressure Loading per FBC, TAS 203-94
   6) Forced Entry Test, per FBC 2411 3.2.1, TAS 202-94

   along with marked-up drawings and installation diagram of aluminum sliding glass door, prepared by Fenestration Testing Lab., Inc., Test Report No. **FTL-6292**, report dated 08/15/11, signed and sealed by Marlin D. Brinson, P. E.
   (This report has been revised for glazing sample A1 & E-1)

C. CALCULATIONS

1. Anchor verification calculations and structural analysis, complying with FBC-2007 & 2010, prepared by Al Farooq Corporation, dated SEP 09, 2011 and last revised on JAN 06, 2012, signed and sealed by Javad Ahmad, P.E
2. Glazing complies w/ ASTME-1300-02 & -04

D. QUALITY ASSURANCE

1. Miami Dade Department of Permitting, Environment, and Regulatory Affairs (PERA).

E. MATERIAL CERTIFICATIONS

1. 1. Notice of Acceptance No. **11–0624.02** issued to E.I. DuPont DeNemours, Inc. for the "**DuPont Sentry Glass® Interlayer**", expiring on 01/14/17.

F. STATEMENTS

1. Statement letter of conformance and letter of no financial interest, prepared by Al Farooq Corporation, dated 08/24/11, signed and sealed by Javad Ahmad, P.E.
2. Laboratory compliance statements, part of the above referenced test reports.
3. Distribution agreement between ES Windows-Energia Solar, SA, Colombia and ES Windows, LLC, USA, dated 10/29/10, signed by MS Carla Torrente and Andres Chomaro, respectively.

G. OTHER

1. Test proposal # **10-0506**, dated 09-23-10, approved by BCCO.

Ishaq I. Chanda

Ishaq I. Chanda, P.E.
Product Control Examiner
NOA No 11-0825.07
Expiration Date: January 19, 2017
Approval Date: January 19, 2012

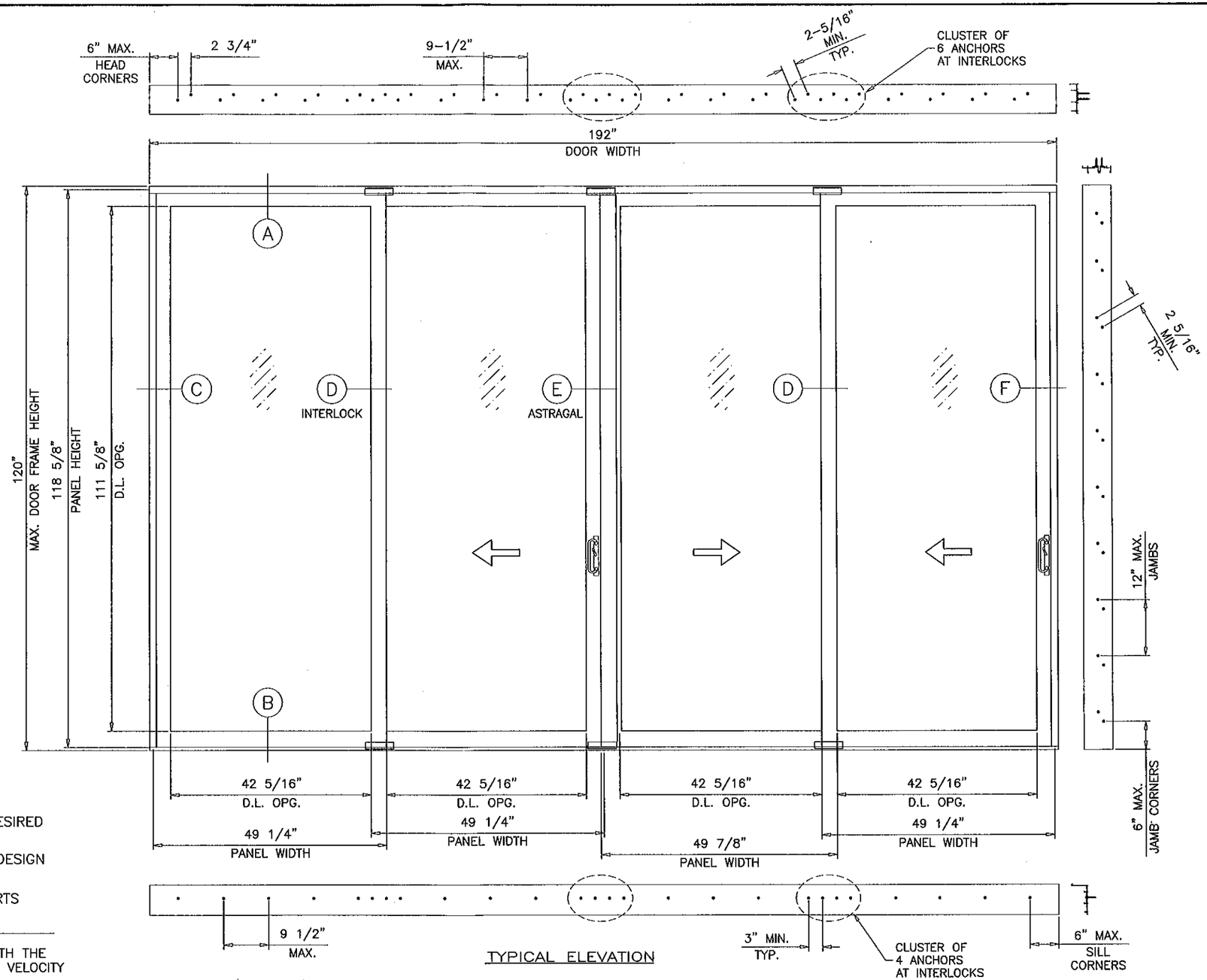

TYPICAL ELEVATION

DAYLITE OPENINGS:
D.L.O. HEIGHT = PANEL HEIGHT − 7.000"
D.L.O. WIDTH = PANEL WIDTH − 6.937"
PANEL HEIGHT = FRAME HEIGHT − 1.375"

SERIES-6000 ALUMINUM SLIDING GLASS DOOR

SEE SHEETS 3 THRU 5 FOR DESIGN LOAD CAPACITY OF DESIRED GLASS SIZE AND REQUIRED REINFORCING.

USING CHART ON SHEET 6 SELECT ANCHOR OPTION WITH DESIGN RATING MORE THAN DESIGN LOADS REQUIRED.

LOWER DESIGN PRESSURES FROM GLASS OR ANCHOR CHARTS WILL APPLY TO ENTIRE SYSTEM.

THIS PRODUCT HAS BEEN DESIGNED AND TESTED TO COMPLY WITH THE REQUIREMENTS OF THE FLORIDA BUILDING CODE INCLUDING HIGH VELOCITY HURRICANE ZONE (HVHZ).

WOOD BUCKS BY OTHERS, MUST BE ANCHORED PROPERLY TO TRANSFER LOADS TO THE STRUCTURE.

ANCHORS SHALL BE AS LISTED, SPACED AS SHOWN ON DETAILS, ANCHORS EMBEDMENT TO BASE MATERIAL SHALL BE BEYOND WALL DRESSING OR STUCCO.

ANCHORING OR LOADING CONDITIONS NOT SHOWN IN THESE DETAILS ARE NOT PART OF THIS APPROVAL.

A LOAD DURATION INCREASE IS USED IN DESIGN OF ANCHORS INTO WOOD ONLY.

MATERIALS INCLUDING BUT NOT LIMITED TO STEEL/METAL SCREWS, THAT COME INTO CONTACT WITH OTHER DISSIMILAR MATERIALS SHALL MEET THE REQUIREMENTS OF THE FLORIDA BLDG. CODE SECTION 2003.8.4.

Approved as complying with the Florida Building Code
Date 01/19/2012
NOA# 11-0825.07
Miami Dade Product Control
By Shaq L. Chaunte

THESE DOORS ARE RATED FOR LARGE & SMALL MISSILE IMPACT. SHUTTERS ARE NOT REQUIRED.

Engr: JAVAD AHMAD
CIVIL
FLA. PE # 70592
C.A.N. 3538

JAN 06 2012

AL-FAROOQ CORPORATION
ENGINEERS & PRODUCT DEVELOPMENT
1235 S.W. 87 AVE
MIAMI, FLORIDA 33174
TEL. (305) 264-8100 FAX. (305) 262-6978
COMP-ANL\W11-41ES

SERIES-6000 ALUM SLIDING GLASS DOOR (L.M.I.)

E.S. WINDOWS, LLC
5220 N.W. 72 AVE. BAY #4
MIAMI, FL. 33166
TEL. (305) 624-7777 FAX. (305) 624-7775

revisions:

no	date	by	description
A	12.28.11		REV. PER BCCO COMMENTS

date: 07-22-11
scale: 1/2"=1'-0"
dr. by: HAMID
chk. by:

drawing no.
W11-41

sheet 1 of 13

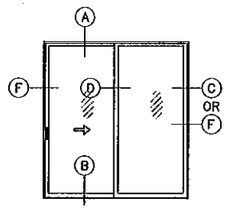

XO (SHOWN)
OX
XX

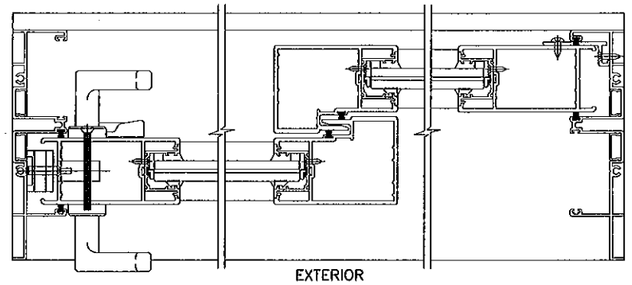

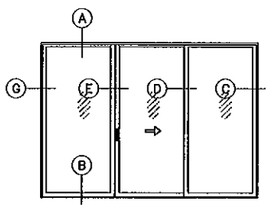

OXO (SHOWN)

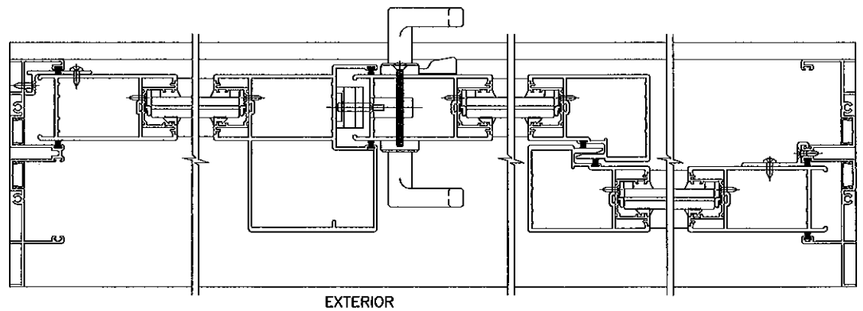

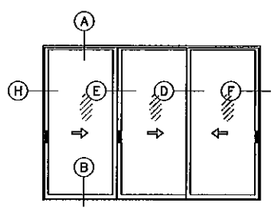

XXX (SHOWN)

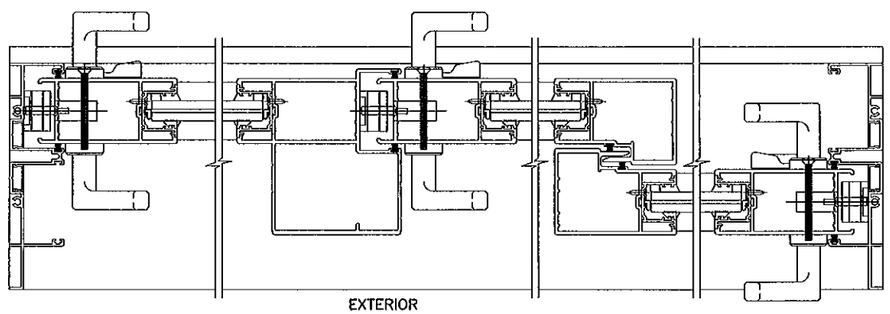

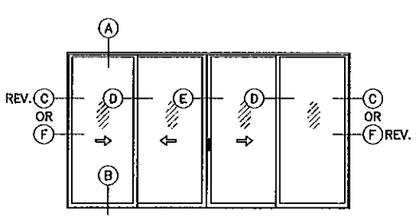

XXXO (SHOWN)
XXXX
OXXO

APPROVED CONFIGURATIONS

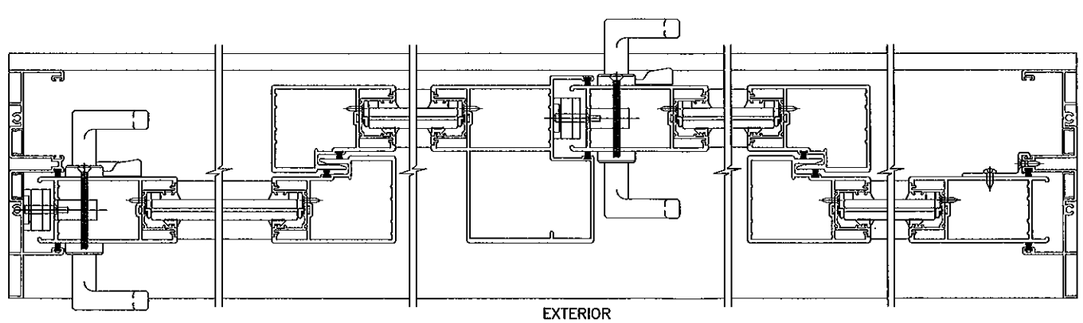

NOTE:
FOR REINFORCING AND GLASS OPTIONS
SEE SHEETS 3 THRU 5.

Approved as complying with the
Florida Building Code
Date 1/19/12
NOA# 11-0825.07
Miami Dade Product Control
By

Engr: JAVAD AHMAD
CIVIL
FLA. PE # 70592
C.A.N. 3538

JAN 06 2012

AL-FAROOQ CORPORATION
ENGINEERS & PRODUCT DEVELOPMENT
1235 S.W. 87 AVE
MIAMI, FLORIDA 33174
TEL. (305) 264-8100 FAX. (305) 262-6978
COMP-ANL\W11-41ES

SERIES-6000 ALUM SLIDING GLASS DOOR (L.M.I.)

E.S. WINDOWS, LLC
5220 N.W. 72 AVE. BAY #4
MIAMI, FL. 33166
TEL. (305) 624-7775 FAX. (305) 624-7777

revisions:

no	date	by	description
A	12.28.11		REV. PER BCCO COMMENTS

date: 07-22-11
scale: -
dr. by: HAMID
chk. by:

drawing no.
W11-41

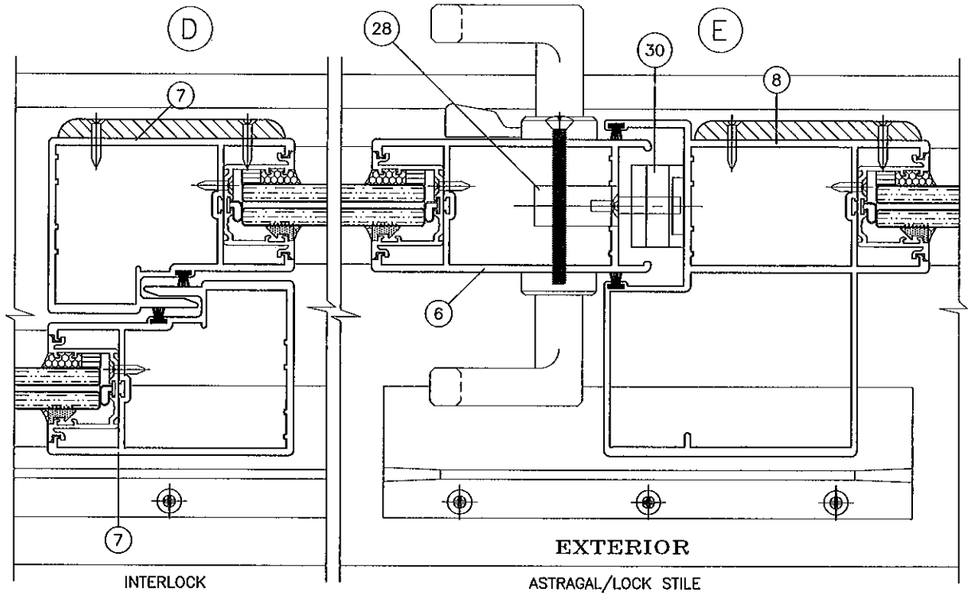

OPTION #1
WITHOUT REINFORCING

DESIGN LOAD CAPACITY – PSF WITHOUT REINFORCING					
PANEL WIDTH NOMINAL INCHES	DOOR HEIGHT INCHES	GLASS TYPE 'A'		GLASS TYPE 'B' & 'B' REVERSE	
		EXT.(+)	INT.(–)	EXT.(+)	INT.(–)
30	80	75.0	75.0	75.0	75.0
36		75.0	75.0	75.0	75.0
42		75.0	75.0	75.0	75.0
44		75.0	75.0	75.0	75.0
48		75.0	75.0	75.0	75.0
53		75.0	75.0	75.0	75.0
60		75.0	75.0	75.0	75.0
30	96	75.0	75.0	75.0	75.0
36		75.0	75.0	75.0	75.0
42		75.0	75.0	75.0	75.0
44		75.0	75.0	75.0	75.0
48		75.0	75.0	75.0	75.0
53		75.0	75.0	75.0	75.0
30	102	75.0	75.0	75.0	75.0
36		75.0	75.0	75.0	75.0
42		75.0	75.0	75.0	75.0
44		75.0	75.0	75.0	75.0
48		75.0	75.0	75.0	75.0
50		75.0	75.0	75.0	75.0
30	108	75.0	75.0	75.0	75.0
36		75.0	75.0	75.0	75.0
42		75.0	75.0	75.0	75.0
44		75.0	75.0	75.0	75.0
48		75.0	75.0	75.0	75.0

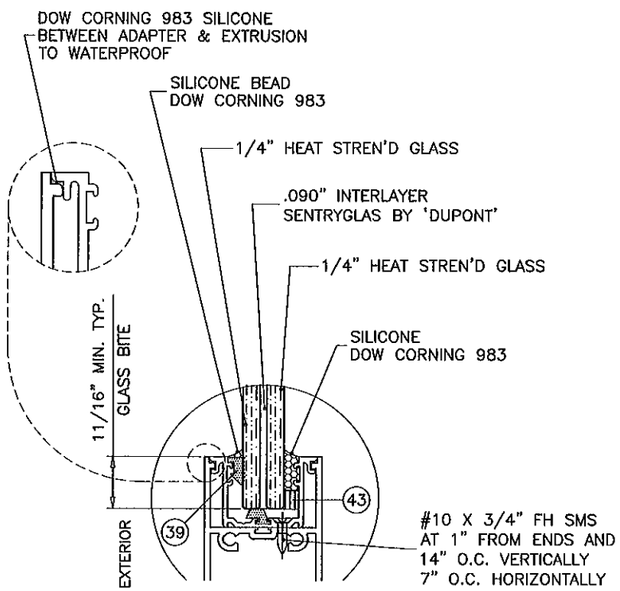

GLASS TYPE 'A'

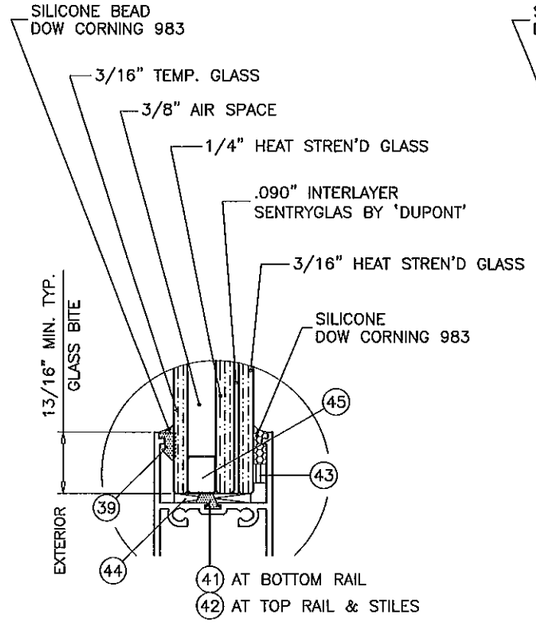

GLASS TYPE 'B'

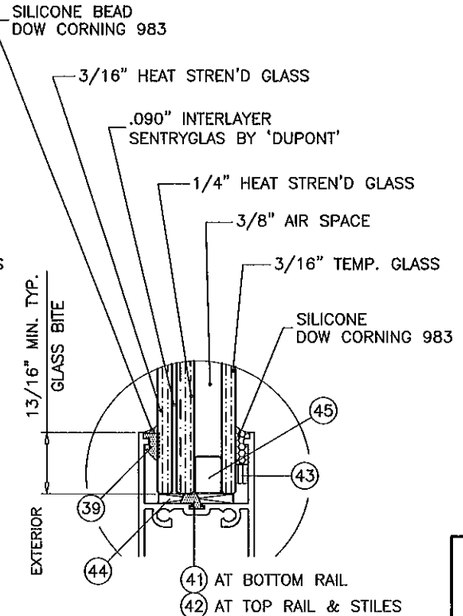

GLASS TYPE 'B' (REVERSE)

GLAZING OPTIONS

Approved as complying with the Florida Building Code
Date 1/19/12
NOA# 11-0825.01
Miami Dade Product Control
By

NOTE:
GLASS CAPACITIES ON THIS SHEET ARE BASED ON ASTM E1300-04 (3 SEC. GUSTS) AND FLORIDA BUILDING COMMISSION DECLARATORY STATEMENT DCA05-DEC-219

Engr: JAVAD AHMAD
CIVIL
FLA. PE # 70592
C.A.N. 3538
JAN 06 2012

AL-FAROOQ CORPORATION
ENGINEERS & PRODUCT DEVELOPMENT
1235 S.W. 87 AVE
MIAMI, FLORIDA 33174
TEL. (305) 264-8100 FAX. (305) 262-6978
COMP-ANL\W11-41ES

SERIES-6000 ALUM SLIDING GLASS DOOR (L.M.I.)

E.S. WINDOWS, LLC
5220 N.W. 72 AVE. BAY #4
MIAMI, FL. 33166
TEL. (305) 624-7775 FAX. (305) 624-7777

revisions:

no	date	by	description
A	12.28.11		REV. PER BCCO COMMENTS

date: 07-22-11
scale: 1/2" = 1"
dr. by: HAMID
chk. by:

drawing no.
W11-41

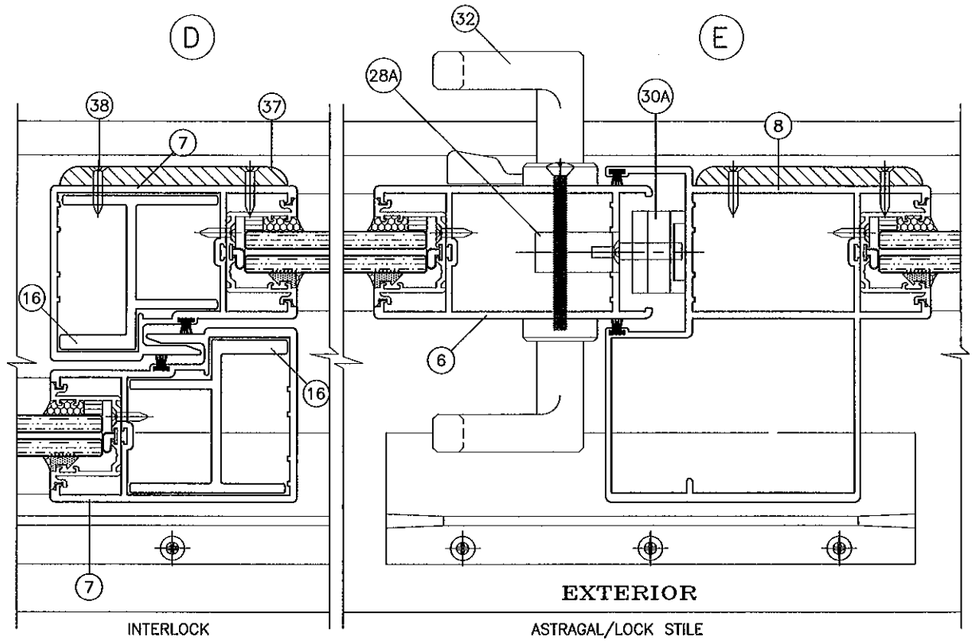

OPTION #2

ALUMINUM REINFORCING AT INTERLOCK

DESIGN LOAD CAPACITY – PSF
REINFORCING AT INTERLOCK

PANEL WIDTH NOMINAL INCHES	DOOR HEIGHT INCHES	GLASS TYPE 'A'		GLASS TYPE 'B'		GLASS TYPE 'B' REVERSE	
		EXT. (+)	INT. (–)	EXT. (+)	INT. (–)	EXT. (+)	INT. (–)
36	80	85.0	145.0	85.0	145.0	85.0	110.0
40		85.0	145.0	85.0	145.0	85.0	110.0
44		85.0	145.0	85.0	145.0	85.0	110.0
48		85.0	145.0	85.0	145.0	85.0	110.0
50		85.0	145.0	85.0	145.0	85.0	110.0
53		85.0	145.0	85.0	145.0	85.0	110.0
56		85.0	145.0	85.0	145.0	85.0	110.0
60		85.0	145.0	85.0	145.0	85.0	110.0
36	96	85.0	145.0	85.0	145.0	85.0	110.0
40		85.0	145.0	85.0	145.0	85.0	110.0
44		85.0	145.0	85.0	145.0	85.0	110.0
48		85.0	145.0	85.0	145.0	85.0	110.0
50		85.0	145.0	85.0	145.0	85.0	110.0
53		85.0	145.0	85.0	144.2	85.0	110.0
56		85.0	110.0	85.0	110.0	85.0	110.0
60		85.0	110.0	85.0	110.0	85.0	110.0
36	102	85.0	145.0	85.0	145.0	85.0	110.0
40		85.0	145.0	85.0	145.0	85.0	110.0
44		85.0	145.0	85.0	145.0	85.0	110.0
48		85.0	145.0	85.0	145.0	85.0	110.0
50		85.0	145.0	85.0	142.6	85.0	110.0
53		85.0	110.0	85.0	110.0	85.0	110.0
56		85.0	110.0	85.0	110.0	85.0	110.0
36	108	85.0	145.0	85.0	145.0	85.0	110.0
40		85.0	145.0	85.0	145.0	85.0	110.0
44		85.0	145.0	85.0	145.0	85.0	110.0
48		85.0	145.0	85.0	140.6	85.0	110.0
50		85.0	110.0	85.0	110.0	85.0	110.0
53		85.0	110.0	85.0	110.0	85.0	110.0
36	114	85.0	110.0	85.0	110.0	85.0	110.0
40		85.0	110.0	85.0	110.0	85.0	110.0
44		85.0	110.0	85.0	110.0	85.0	110.0
48		85.0	110.0	85.0	110.0	85.0	110.0
50		85.0	110.0	85.0	110.0	85.0	110.0
36	120	85.0	110.0	85.0	110.0	85.0	110.0
40		85.0	110.0	85.0	110.0	85.0	110.0
44		85.0	110.0	85.0	110.0	85.0	110.0
48		85.0	110.0	85.0	110.0	85.0	110.0

Approved as complying with the Florida Building Code
Date: 1/19/12
NOA# 11-0825.07
Miami Dade Product Control
By Ishaq I. Chunde

NOTE:
GLASS CAPACITIES ON THIS SHEET ARE BASED ON ASTM E1300–04 (3 SEC. GUSTS) AND FLORIDA BUILDING COMMISSION DECLARATORY STATEMENT DCA05–DEC–219

Engr: JAVAD AHMAD
CIVIL
FLA. PE # 70592
C.A.N. 3538
JAN 06 2012

AL-FAROOQ CORPORATION
ENGINEERS & PRODUCT DEVELOPMENT
1235 S.W. 87 AVE
MIAMI, FLORIDA 33174
TEL. (305) 264-8100 FAX. (305) 262-6978

COMP–ANL\W11–41ES

SERIES–6000 ALUM SLIDING GLASS DOOR (L.M.I.)

E.S. WINDOWS, LLC
5220 N.W. 72 AVE. BAY #4
MIAMI, FL. 33166
TEL. (305) 624–7775 FAX. (305) 624–7777

revisions:

no	date	by	description
A	12.28.11		REV. PER BCCO COMMENTS

date: 07–22–11
scale: 1/2" = 1"
dr. by: HAMID
chk. by:

drawing no.
W11–41

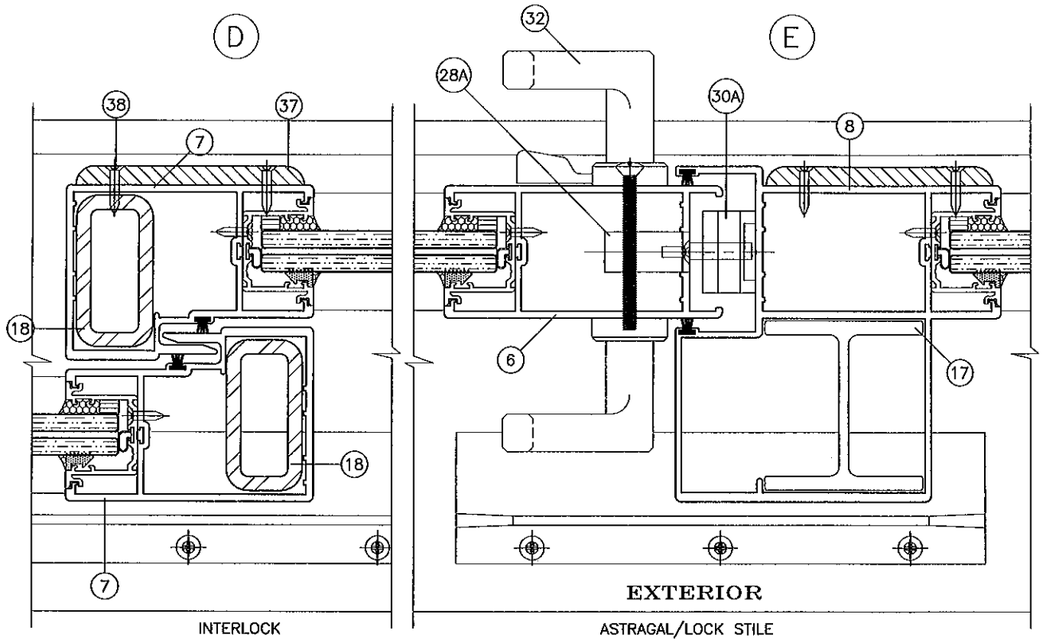

OPTION #3

STEEL REINFORCING AT INTERLOCK
ALUMINUM REINFORCING AT ASTRAGAL

DESIGN LOAD CAPACITY – PSF
REINFORCING AT INTERLOCK & ASTRAGAL

PANEL WIDTH NOMINAL INCHES	DOOR HEIGHT INCHES	GLASS TYPE 'A'		GLASS TYPE 'B'		GLASS TYPE 'B' REVERSE	
		EXT. (+)	INT. (–)	EXT. (+)	INT. (–)	EXT. (+)	INT. (–)
36	80	85.0	130.0	85.0	130.0	85.0	110.0
40		85.0	130.0	85.0	130.0	85.0	110.0
44		85.0	130.0	85.0	130.0	85.0	110.0
48		85.0	130.0	85.0	130.0	85.0	110.0
50		85.0	130.0	85.0	130.0	85.0	110.0
53		85.0	130.0	85.0	130.0	85.0	110.0
56		85.0	130.0	85.0	130.0	85.0	110.0
60		85.0	130.0	85.0	130.0	85.0	110.0
36	96	85.0	130.0	85.0	130.0	85.0	110.0
40		85.0	130.0	85.0	130.0	85.0	110.0
44		85.0	130.0	85.0	130.0	85.0	110.0
48		85.0	130.0	85.0	130.0	85.0	110.0
50		85.0	130.0	85.0	130.0	85.0	110.0
53		85.0	130.0	85.0	130.0	85.0	110.0
56		85.0	130.0	85.0	130.0	85.0	110.0
60		85.0	128.0	85.0	128.0	85.0	110.0
36	102	85.0	130.0	85.0	130.0	85.0	110.0
40		85.0	130.0	85.0	130.0	85.0	110.0
44		85.0	130.0	85.0	130.0	85.0	110.0
48		85.0	130.0	85.0	130.0	85.0	110.0
50		85.0	130.0	85.0	130.0	85.0	110.0
53		85.0	126.7	85.0	126.7	85.0	110.0
56		85.0	122.3	85.0	122.3	85.0	110.0
36	108	85.0	130.0	85.0	130.0	85.0	110.0
40		85.0	130.0	85.0	130.0	85.0	110.0
44		85.0	130.0	85.0	130.0	85.0	110.0
48		85.0	125.7	85.0	125.7	85.0	110.0
50		85.0	122.1	85.0	122.1	85.0	110.0
53		85.0	117.3	85.0	117.3	85.0	110.0
36	114	85.0	130.0	85.0	130.0	85.0	110.0
40		85.0	130.0	85.0	130.0	85.0	110.0
44		85.0	125.2	85.0	125.2	85.0	110.0
48		85.0	117.3	85.0	117.3	85.0	110.0
50		85.0	113.9	85.0	113.9	85.0	110.0
36	120	85.0	130.0	85.0	130.0	85.0	110.0
40		85.0	126.7	85.0	126.7	85.0	110.0
44		85.0	117.6	85.0	117.6	85.0	110.0
48		85.0	110.0	85.0	110.0	85.0	110.0

Approved as complying with the Florida Building Code
Date 1/19/12
NOA# 11-0825.07
Miami Dade Product Control
By Ishaq I. Ghauta

NOTE:
GLASS CAPACITIES ON THIS SHEET ARE BASED ON ASTM E1300–04 (3 SEC. GUSTS) AND FLORIDA BUILDING COMMISSION DECLARATORY STATEMENT DCA05–DEC–219

Engr: JAVAD AHMAD
CIVIL
FLA. PE # 70592
C.A.N. 3538
JAN 06 2012

AL-FAROOQ CORPORATION
ENGINEERS & PRODUCT DEVELOPMENT
1235 S.W. 87 AVE
MIAMI, FLORIDA 33174
TEL. (305) 264-8100 FAX. (305) 262-6978
COMP-ANL\W11-41ES

SERIES-6000 ALUM SLIDING GLASS DOOR (L.M.I.)

E.S. WINDOWS, LLC
5220 N.W. 72 AVE. BAY #4
MIAMI, FL. 33166
TEL. (305) 624-7775 FAX. (305) 624-7777

revisions:

no	date	by	description
A	12.28.11		REV. PER BCCO COMMENTS

date: 07-22-11
scale: 1/2" = 1"
dr. by: HAMID
chk. by:

drawing no. W11-41

TYPICAL ANCHORS: SEE ELEV. FOR SPACING

AT HEAD

TYPE 'A'– 1/4" DIA. ULTRACON BY 'ELCO' (Fu=177 KSI, Fy=155 KSI)
INTO 2BY WOOD BUCKS OR WOOD STRUCTURES
1–3/8" MIN. PENETRATION INTO WOOD

THRU 1BY BUCKS INTO CONCRETE
1–1/4" MIN. EMBED INTO CONCRETE

TYPE 'A1'– 5/16" DIA. ULTRACON BY 'ELCO' (Fu=177 KSI, Fy=155 KSI)
INTO 2BY WOOD BUCKS OR WOOD STRUCTURES
1–3/8" MIN. PENETRATION INTO WOOD

THRU 1BY BUCKS INTO CONCRETE
1–3/8" MIN. EMBED INTO CONCRETE

TYPE 'B'– 1/4" DIA. ULTRACON BY 'ELCO' (Fu=177 KSI, Fy=155 KSI)
DIRECTLY INTO CONCRETE
1–3/8" MIN. EMBED

TYPE 'C'– #14 SMS OR SELF DRILLING SCREWS (GRADE 2 CRS)
INTO MIAMI–DADE COUNTY APPROVED MULLIONS (1/8" THK. MIN.)
INTO METAL STRUCTURES
STEEL : 12 GA. MIN. (Fy = 36 KSI MIN.)
ALUMINUM : 1/8" THK. MIN. (6063–T5 MIN.)
(STEEL IN CONTACT WITH ALUMINUM TO BE PLATED OR PAINTED)

AT SILL

TYPE 'B'– 1/4" DIA. ULTRACON BY 'ELCO' (Fu=177 KSI, Fy=155 KSI)
DIRECTLY INTO CONCRETE
1–3/4" MIN. EMBED

AT JAMBS

TYPE 'A'– 1/4" DIA. ULTRACON BY 'ELCO' (Fu=177 KSI, Fy=155 KSI)
INTO 2BY WOOD BUCKS OR WOOD STRUCTURES
1–3/8" MIN. PENETRATION INTO WOOD

THRU 1BY BUCKS INTO CONC. OR MASONRY
1–1/4" MIN. EMBED INTO CONC. OR MASONRY

TYPE 'B'– 1/4" DIA. ULTRACON BY 'ELCO' (Fu=177 KSI, Fy=155 KSI)
DIRECTLY INTO CONC. OR MASONRY
1–1/4" MIN. EMBED INTO CONC. OR MASONRY

TYPE 'C'– #14 SMS OR SELF DRILLING SCREWS (GRADE 5 CRS)
INTO MIAMI–DADE COUNTY APPROVED MULLIONS (1/8" THK. MIN.)
INTO METAL STRUCTURES
STEEL : 12 GA. MIN. (Fy = 36 KSI MIN.)
ALUMINUM : 1/8" THK. MIN. (6063–T5 MIN.)
(STEEL IN CONTACT WITH ALUMINUM TO BE PLATED OR PAINTED)

ANCHOR EDGE DISTANCES

INTO CONCRETE = 2–1/2" MIN.
INTO WOOD STRUCTURE = 1" MIN.
INTO METAL STRUCTURE = 3/4" MIN.

CONCRETE AT HEAD, SILL OR JAMBS f'c = 3000 PSI MIN.
C–90 HOLLOW/FILLED BLOCK AT JAMBS f'm = 2000 PSI MIN.

DESIGN LOAD CAPACITY – PSF (HEAD ANCHORS)

PANEL WIDTH NOMINAL INCHES	DOOR HEIGHT INCHES	ANCHOR TYPE 'A' EXT. (+) INT. (–)	ANCHORS TYPE 'A1', 'B' & 'C' EXT. (+) INT. (–)
30	80	145.0	145.0
36		145.0	145.0
42		145.0	145.0
44		145.0	145.0
48		145.0	145.0
50		145.0	145.0
54		144.3	145.0
60		137.7	145.0
30	96	145.0	145.0
36		145.0	145.0
42		131.1	145.0
44		126.8	145.0
48		119.5	145.0
50		116.3	145.0
54		110.8	141.4
60		104.3	133.1
30	102	145.0	145.0
36		136.6	145.0
42		121.4	145.0
44		117.3	145.0
48		110.3	140.8
50		107.3	136.9
54		102.0	130.1
30	108	145.0	145.0
36		127.5	145.0
42		113.0	144.2
44		109.1	139.3
48		102.4	130.7
50		99.5	127.0
30	114	139.1	145.0
36		119.5	145.0
42		105.7	134.9
44		102.0	130.2
48		95.6	122.0
50		92.8	118.4
30	120	131.1	145.0
36		112.5	143.5
42		99.3	126.8
44		95.8	122.2
48		89.6	114.4

DESIGN LOAD CAPACITY – PSF (SILL ANCHORS)

PANEL WIDTH NOMINAL INCHES	DOOR HEIGHT INCHES	ANCHOR TYPE 'B' EXT. (+) INT. (–)
30	80	145.0
36		145.0
42		145.0
44		145.0
48		145.0
50		145.0
54		145.0
60		145.0
30	96	145.0
36		145.0
42		145.0
44		145.0
48		145.0
50		144.4
54		137.6
60		129.5
30	102	145.0
36		145.0
42		145.0
44		145.0
48		136.9
50		133.2
54		126.6
30	108	145.0
36		145.0
42		140.3
44		135.5
48		127.1
50		123.5
30	114	145.0
36		145.0
42		131.2
44		126.6
48		118.7
50		115.2
30	120	145.0
36		139.6
42		123.3
44		118.9
48		111.3

DESIGN LOAD CAPACITY – PSF (JAMB ANCHORS)

PANEL WIDTH NOMINAL INCHES	ANCHORS TYPE 'A' & 'B' EXT. (+) INT. (–)	ANCHOR TYPE 'C' EXT. (+) INT. (–)
48	145.0	145.0
50	145.0	145.0
53	145.0	139.3
56	145.0	131.8
60	145.0	123.2

Approved as complying with the Florida Building Code
Date 1/19/12
NOA# 11-0825.07
Miami Dade Product Control
By Ishaq I. Chaudhry

NOTE:
SEE SHEETS 3 THRU 5 FOR DESIGN LOAD CAPACITY OF DESIRED GLASS SIZE. USING CHART ON THIS SHEET SELECT ANCHOR OPTION WITH DESIGN RATING MORE THAN DESIGN LOADS REQUIRED.
LOWER DESIGN PRESSURES FROM GLASS OR HEAD, SILL, JAMB ANCHOR CHARTS WILL APPLY TO ENTIRE SYSTEM.

Engr: JAVAD AHMAD
CIVIL
FLA. PE # 70592
C.A.N. 3538
JAN 06 2012

AL-FAROOQ CORPORATION
ENGINEERS & PRODUCT DEVELOPMENT
1235 S.W. 87 AVE
MIAMI, FLORIDA 33174
TEL. (305) 264-8100 FAX. (305) 262-6978
COMP-ANL\W11-41ES

SERIES–6000 ALUM SLIDING GLASS DOOR (L.M.I.)

E.S. WINDOWS, LLC
5220 N.W. 72 AVE. BAY #4
MIAMI, FL. 33166
TEL. (305) 624–7775 FAX. (305) 624–7777

revisions:			
no	date	by	description
A	12.28.11		REV. PER BCCO COMMENTS

date: 07–22–11
scale: 1/2" = 1"
dr. by: HAMID
chk. by:

drawing no. W11–41

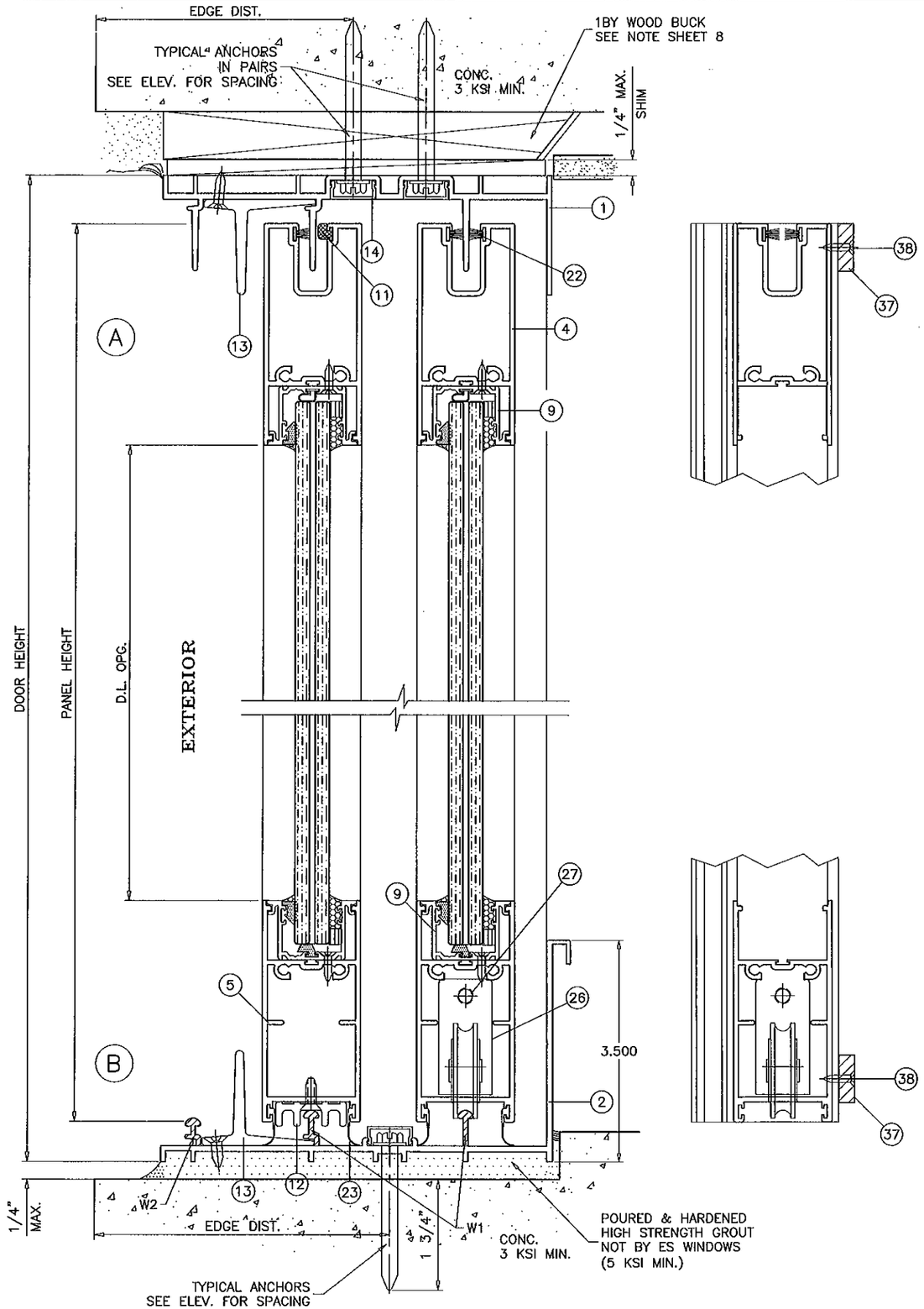

SEALANT:

ALL JOINTS AND FRAME CONNECTIONS SEALED WITH WHITE/ALUMINUM COLORED SILICONE.

WEEPHOLES:

W1 = 2-5/8" LONG WEEP NOTCH AT EACH END
W2 = 1" LONG WEEP NOTCH AT EACH END

Approved as complying with the Florida Building Code
Date 1/19/12
NOA# 11-0825.07
Miami Dade Product Control
By Ishaq I. Chanda

Engr: JAVAD AHMAD
CIVIL
FLA. PE # 70592
C.A.N. 3538
JAN 06 2012

AL-FAROOQ CORPORATION
ENGINEERS & PRODUCT DEVELOPMENT
1235 S.W. 87 AVE
MIAMI, FLORIDA 33174
TEL. (305) 264-8100 FAX. (305) 262-6978
COMP-ANL\W11-41ES

SERIES-6000 ALUM SLIDING GLASS DOOR (L.M.I.)

E.S. WINDOWS, LLC
5220 N.W. 72 AVE. BAY #4
MIAMI, FL. 33166
TEL. (305) 624-7775 FAX. (305) 624-7777

revisions:

no	date	by	description
A	12.28.11		REV. PER BCCO COMMENTS

date: 07-22-11
scale: 1/2" = 1"
dr. by: HAMID
chk. by:

drawing no.
W11-41

sheet 7 of 13

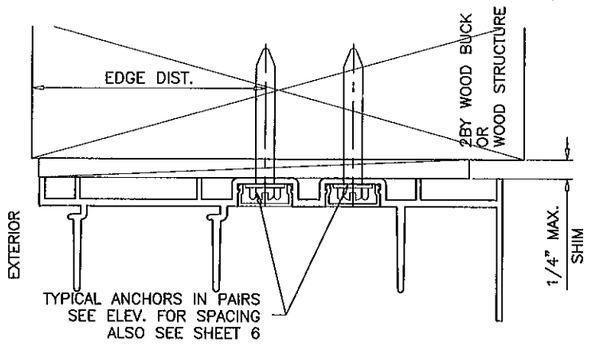

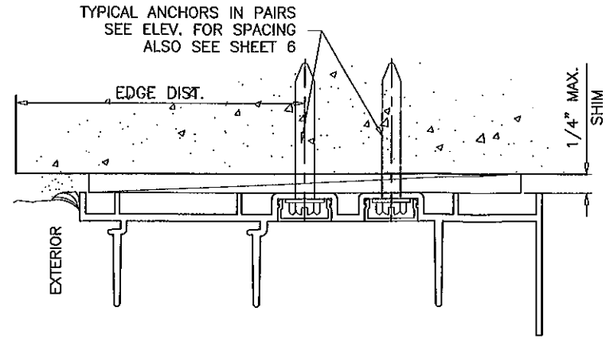

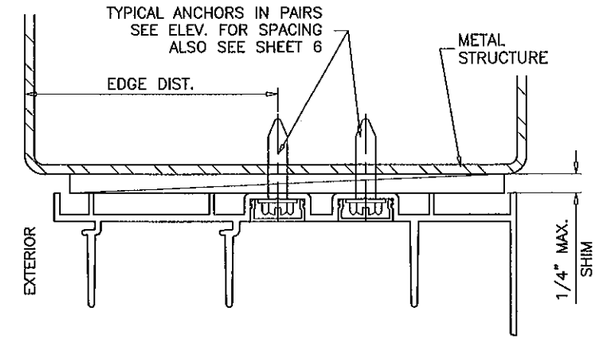

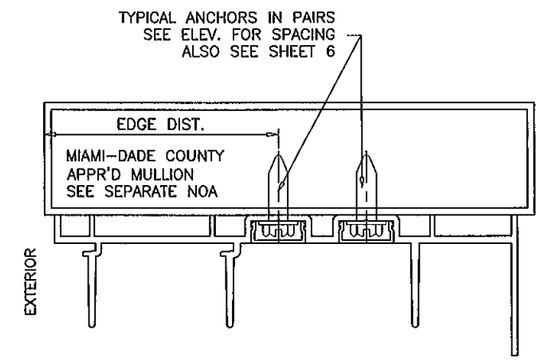

1BY OR 2BY WOOD BUCKS AND METAL STRUCTURES NOT BY E.S. WINDOWS MUST SUPPORT LOADS IMPOSED BY GLAZING SYSTEM AND TRANSFER THEM TO THE BUILDING STRUCTURE.

Approved as complying with the Florida Building Code
Date 1/19/12
NOA# 11-0825.07
Miami Dade Product Control
By Ishaq Chaudhry

Engr: JAVAD AHMAD
CIVIL
FLA. PE # 70592
C.A.N. 3538
JAN 06 2012

AL-FAROOQ CORPORATION
ENGINEERS & PRODUCT DEVELOPMENT
1235 S.W. 87 AVE
MIAMI, FLORIDA 33174
TEL. (305) 264-8100 FAX. (305) 262-6978

COMP-ANL\W11-41ES

SERIES-6000 ALUM SLIDING GLASS DOOR (L.M.I.)

E.S. WINDOWS, LLC
5220 N.W. 72 AVE. BAY #4
MIAMI, FL. 33166
TEL. (305) 624-7775 FAX. (305) 624-7777

revisions:

no	date	by	description
A	12.28.11		REV. PER BCCO COMMENTS

date: 07-22-11
scale: 1/2" = 1"
dr. by: HAMID
chk. by:

drawing no.
W11-41

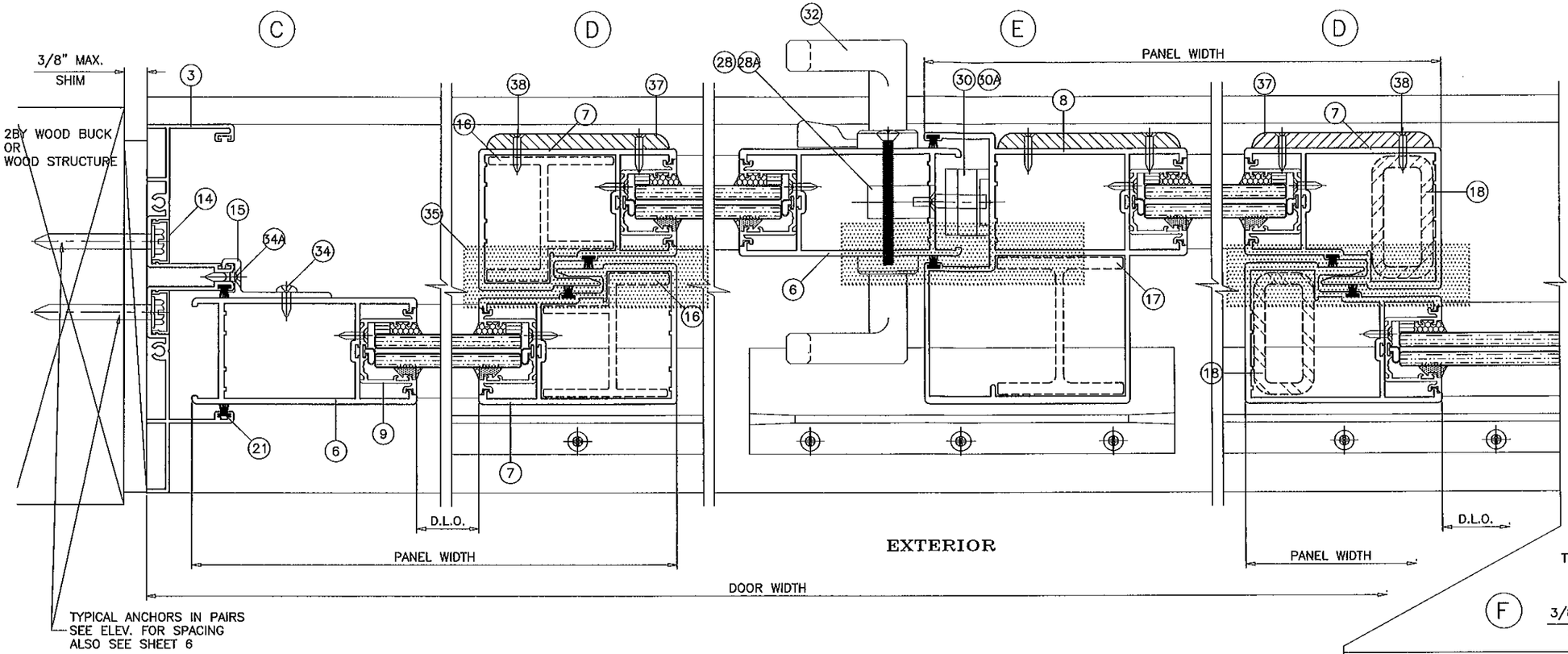

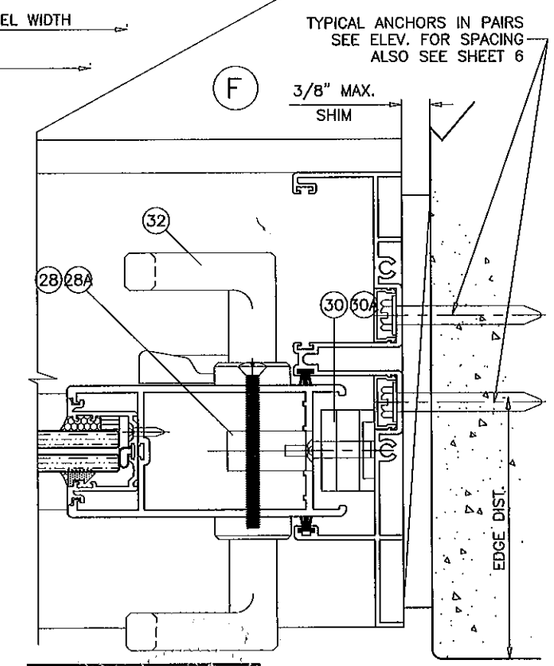

ALUMINUM AND STEEL REINFORCING AT INTERLOCK AND ASTRAGAL STILES
SHOWN FOR ILLUSTRATION ONLY.
USE AS SHOWN ON SHEETS 3 THRU 5.
SEE CHART FOR REINFORCING OPTION LOAD CAPACITY, INCLUDING GLASS OPTIONS.

Approved as complying with the
Florida Building Code
Date 1/19/12
NOA# 11-0825.01
Miami Dade Product Control
By Ishaq I. Chunara

Engr: JAVAD AHMAD
CIVIL
FLA. PE # 70592
C.A.N. 3538

JAN 06 2012

AL-FAROOQ CORPORATION
ENGINEERS & PRODUCT DEVELOPMENT
1235 S.W. 87 AVE
MIAMI, FLORIDA 33174
TEL. (305) 264-8100 FAX. (305) 262-6978

COMP-ANL\W11-41ES

SERIES-6000 ALUM SLIDING GLASS DOOR (L.M.I.)

E.S. WINDOWS, LLC
5220 N.W. 72 AVE. BAY #4
MIAMI, FL. 33166
TEL. (305) 624-7775 FAX. (305) 624-7777

revisions:

no	date	by	description
A	12.28.11		REV. PER BCCO COMMENTS

date: 07-22-11
scale: 1/2" = 1"
dr. by: HAMID
chk. by:

drawing no.
W11-41

sheet 9 of 13

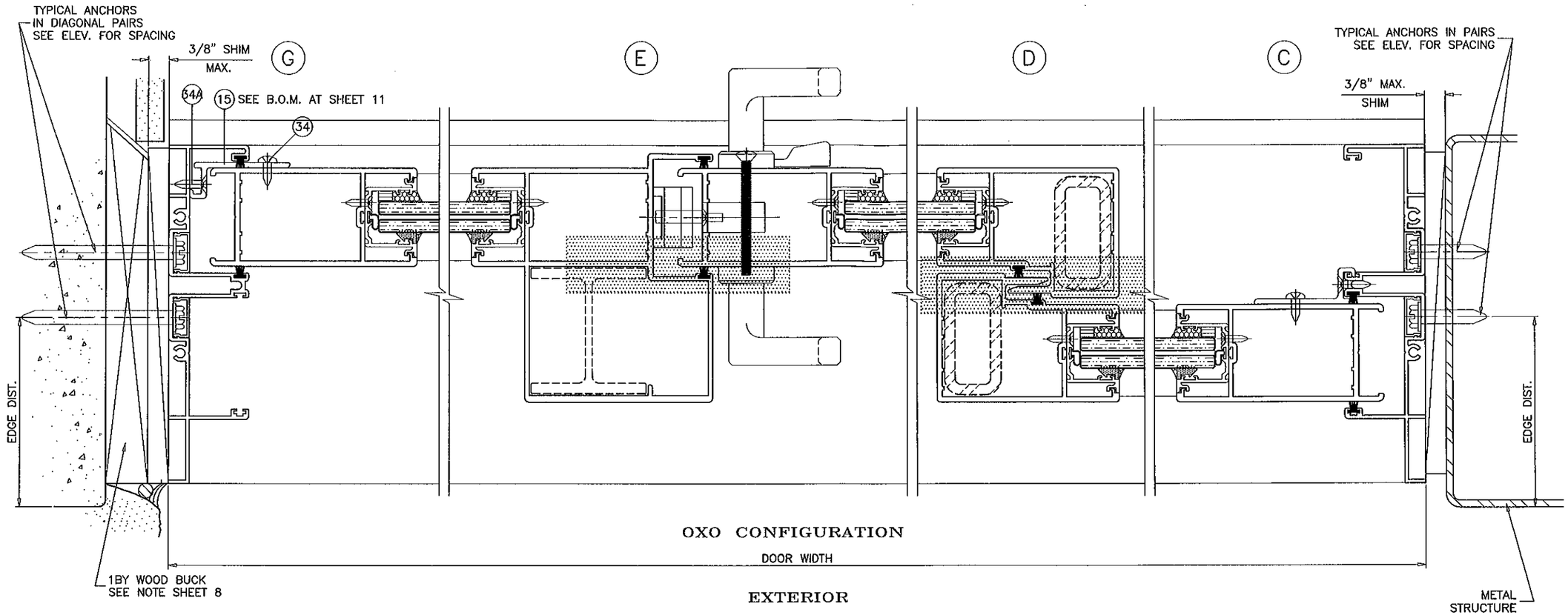

OXO CONFIGURATION

EXTERIOR

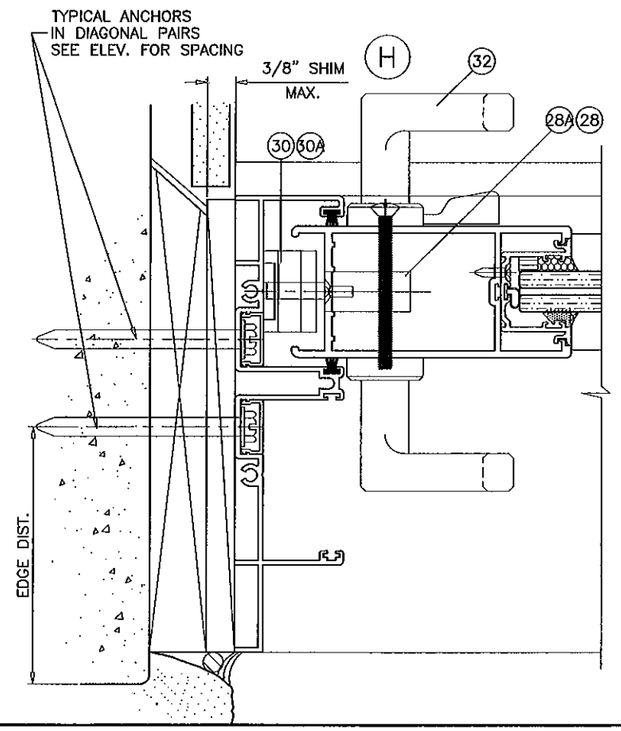

ALUMINUM AND STEEL REINFORCING AT INTERLOCK AND ASTRAGAL STILES
SHOWN FOR ILLUSTRATION ONLY.
USE AS SHOWN ON SHEETS 3 THRU 5.
SEE CHART FOR REINFORCING OPTION LOAD CAPACITY, INCLUDING GLASS OPTIONS.

Approved as complying with the
Florida Building Code
Date 1/19/12
NOA# 11-0825.07
Miami Dade Product Control
By Ishaq I. Chanda

Engr: JAVAD AHMAD
CIVIL
FLA. PE # 70592
C.A.N. 3538
JAN 06 2012

AL-FAROOQ CORPORATION
ENGINEERS & PRODUCT DEVELOPMENT
1235 S.W. 87 AVE
MIAMI, FLORIDA 33174
TEL. (305) 264-8100 FAX. (305) 262-6978

COMP-ANL\W11-41ES

SERIES-6000 ALUM SLIDING GLASS DOOR (L.M.I.)

E.S. WINDOWS, LLC
5220 N.W. 72 AVE. BAY #4
MIAMI, FL. 33166
TEL. (305) 624-7775 FAX. (305) 624-7777

revisions:

no	date	by	description
A	12.28.11		NO CHANGE THIS SHEET

date: 07-22-11
scale: 1/2" = 1"
dr. by: HAMID
chk. by:

drawing no.
W11-41

sheet 10 of 13

ITEM #	PART #	QUANTITY	DESCRIPTION	MATERIAL	MANF./SUPPLIER/REMARKS
1	ES-6001	1	FRAME HEAD	6005-T5	–
2	ES-6023	1	FRAME SILL – 3-1/2"	6005-T5	–
3	ES-6003	1	FRAME JAMB	6063-T6	–
4	ES-6004	2/ PANEL	TOP RAIL	6063-T6	–
5	ES-6005	2/ PANEL	BOTTOM RAIL	6063-T6	–
6	ES-6006	AS REQD.	LOCK STILE	6063-T6	–
7	ES-6007	AS REQD.	INTERLOCK	6063-T6	–
8	ES-6008	AS REQD.	FEMALE ASTRAGAL	6063-T6	–
9	ES-6009C	AS REQD.	GLAZING ADAPTER	6063-T6	–
11	ES-6016	4/ PANEL	PANEL GUIDE (TOP ONLY)	CELCON	–
12	ES-6015	2/ PANEL	FIXED PANEL BOTTOM CLIP , 7" LONG MIN.	6063-T6	SECURE W/ (2) #8 X 3/4" FH SMS
13	ES-6010	2/ PANEL	RETAINER CLIP, 6" LONG	6005-T5	AT MTG. RAIL HEAD & SILL ENDS
14	ES-6011	2/ JAMB	JAMB SCREW COVER	6063-T5	OPTIONAL
15	ES-6014	AS REQD.	FIXED PANEL CLIP, 4" LONG	6063-T6	AT 20" FROM EACH END AND 27" O.C. MAX.
16	ES-6012	AS REQD.	INTERLOCK STIFFENER (LENGTH = PANEL HT. – 2-3/8")	6063-T6	–
17	ES-6013	AS REQD.	ASTRAGAL STIFFENER (LENGTH = PANEL HT. – 2-3/8")	6063-T6	–
18	1" X 2" X 3/16"	AS REQD.	STEEL TUBE REINFORCING (LENGTH = PANEL HT. – 2-3/8")	A36 STEEL	TO BE PAINTED
21	W222521K	AS REQD.	STILE & JAMB W'STRIPPING	–	ULTRAFAB
22	W223221K	AS REQD.	TOP RAIL W'STRIPPING	–	ULTRAFAB
23	ES-6027	AS REQD.	BOTTOM RAIL W'STRIPPING	EPDM	DUROMETER 75±4 SHORE A
24	#10 X 1-1/2" PH SMS	8/ PANEL	PANEL ASSY SCREWS	–	–
25	#10 X 1" PH SMS	2/ CORNER	FRAME ASSY SCREWS	–	–
26	1939-7585-55	2/ MOV. PANEL	GLASS PANEL ROLLER ASSY.	ST. STEEL	1-1/4" O.D. WHEELS
27	1/4-20 X 1-3/4" PH MS	2/ ROLLER	ROLLER INST. SCREWS	–	–
28	191056	1/ MOV. PANEL	STD. MORTISE LOCK, AT 40" FROM BOTTOM	ST. STEEL	INTERLOCK (ASSA ABLOY)
28A	191014	1/ MOV. PANEL	MULTI POINT MORTISE LOCK, AT 40" FROM BOTTOM	ST. STEEL	INTERLOCK (ASSA ABLOY)
29	#10-24 X 3/8" PH MS	2/ LOCK	LOCK INSTALLATION SCREW	ST. STEEL	–
30	191018	1/ LOCK	LOCK KEEPER (STD. LOCK), AT 48-1/2" FROM BOTTOM	PLATED STEEL	INTERLOCK (ASSA ABLOY)
30A	191040	1/ LOCK	LOCK KEEPER (MULTI POINT LOCK), AT 48-1/2" FROM BOTTOM	ST. STEEL	INTERLOCK (ASSA ABLOY)
31	#10 X 5/8" PH SMS B	2/ LOCK	LOCK KEEPER MOUNT. SCREW (STD. LOCK)	ST. STEEL	–
31A	#8 X 3/4" FH SMS	4/ LOCK	LOCK KEEPER MOUNT. SCREW (MULTI POINT LOCK)	ST. STEEL	–
32	#623Z	1/ LOCK	INTERIOR AND EXTERIOR PULL	–	(3) #6-32 X 1/2" FH MS, ST. STEEL
34	#10 X 3/4" PH SDS	2/ CLIP	FIXED PANEL CLIP FASTENER	ST. STEEL	–
34A	#10 X 3/4" PH SDS	2/ CLIP	FIXED PANEL CLIP FASTENER	ST. STEEL	–
35	–	AS REQD.	1"X4" LONG SELF ADHESIVE PILE PAD	WOOLPILE	AT HEAD AND SILL
37	ES-6019	AS REQD.	RESTRAINING PLATE	NYLON	AT TOP & BOTT. INTERLOCKS & ASTRAGAL
38	#8 X 3/4" FH SMS	2/ PLATE	RESTRAINING PLATE FASTENER	–	–
39	ES-4013	AS REQD.	GLAZING WEDGE	–	–
41	ES-4014	AS REQD.	BOTTOM RAIL GLASS STOP	EPDM	DUROMETER 68±4 SHORE A
42	ES-4018	AS REQD.	TOP RAIL & STILES GLASS STOP	EPDM	DUROMETER 75±4 SHORE A
43	–	AS REQD.	1/4" X 1/4" GLAZING TAPE	FOAM	–
44	–	2/ LITE	SETTING BLOCK, 1" X 1/8" X 2-1/2" LONG	EPDM	DUROMETER 75±4 SHORE A
45	–	4/ LITE	BOX SPACER	ALUMINUM	–

LATCHES:
LIMIT ITEMS 28 AND 30 FOR USE WITH DOORS WITHOUT REINFORCING OPTION 1.
ITEMS 28A AND 30A CAN BE USED FOR ALL DOORS WITH OR WITHOUT REINFORCINGS.

Engr: JAVAD AHMAD
CIVIL
FLA. PE # 70592
C.A.N. 3538
JAN 06 2012

Approved as complying with the Florida Building Code
Date 11/9/12
NOA# 11-0825.07
Miami Dade Product Control
By Ishaq I. Ghauri

AL-FAROOQ CORPORATION
ENGINEERS & PRODUCT DEVELOPMENT
1235 S.W. 87 AVE
MIAMI, FLORIDA 33174
TEL. (305) 264-8100 FAX. (305) 262-6978

COMP-ANL\W11-41ES

SERIES-6000 ALUM SLIDING GLASS DOOR (L.M.I.)

E.S. WINDOWS, LLC
5220 N.W. 72 AVE. BAY #4
MIAMI, FL. 33166
TEL. (305) 624-7775 FAX. (305) 624-7777

revisions:

no	date	by	description
A	12.28.11		REV. PER BCCO COMMENTS

date: 07-22-11
scale: 1/2" = 1"
dr. by: HAMID
chk. by:

drawing no.
W11-41

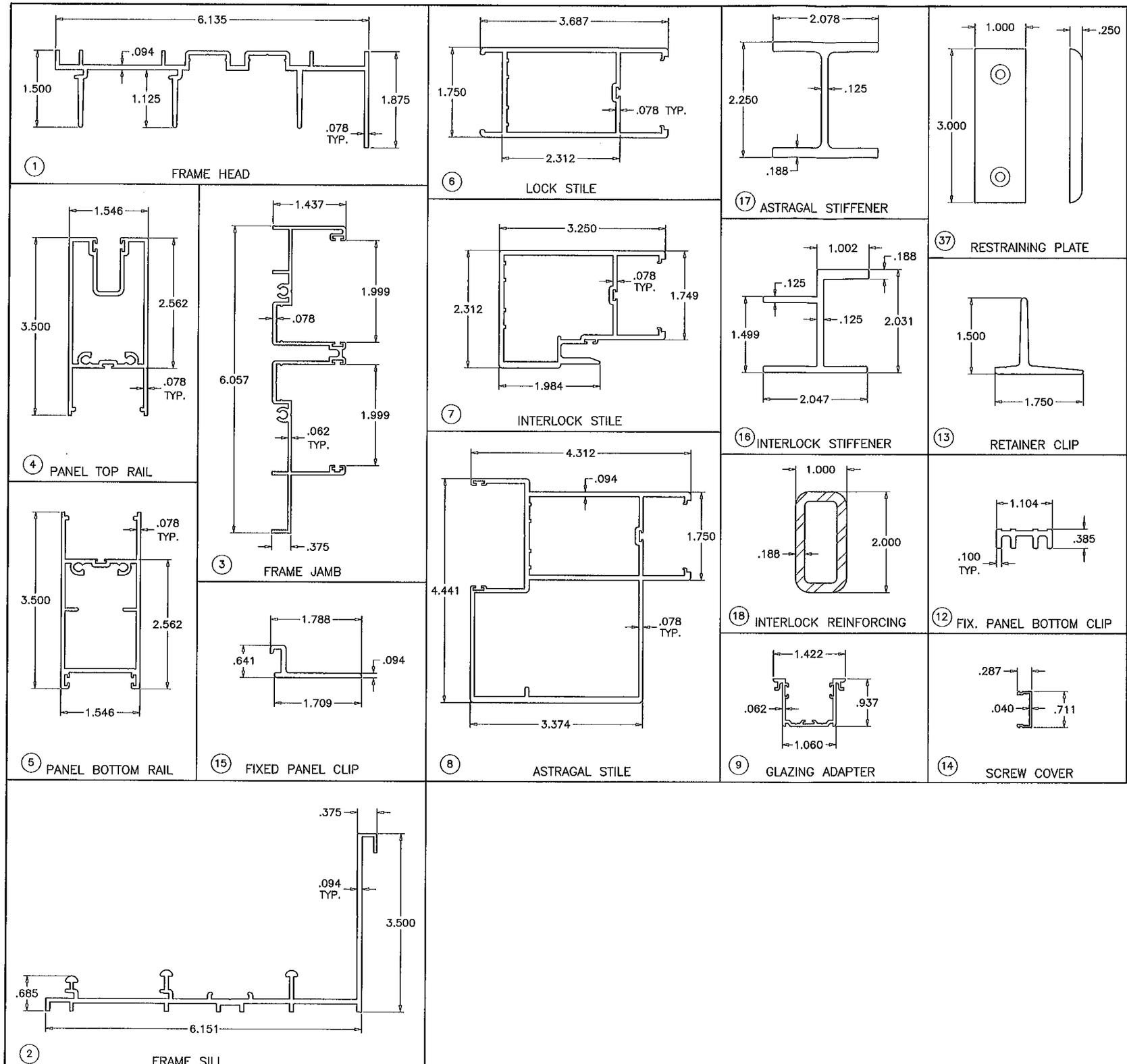

Approved as complying with the Florida Building Code
Date 1/19/12
NOA# 11-0825.07
Miami Dade Product Control
By /Shing/. Chaudh

Engr: JAVAD AHMAD
CIVIL
FLA. PE # 70592
C.A.N. 3538

JAN 16 2012

AL-FAROOQ CORPORATION
ENGINEERS & PRODUCT DEVELOPMENT
1235 S.W. 87 AVE
MIAMI, FLORIDA 33174
TEL. (305) 264-8100 FAX. (305) 262-6978

COMP-ANL\W11-41ES

SERIES-6000 ALUM SLIDING GLASS DOOR (L.M.I.)

E.S. WINDOWS, LLC
5220 N.W. 72 AVE. BAY #4
MIAMI, FL. 33166
TEL. (305) 624-7775 FAX. (305) 624-7777

revisions:

no	date	by	description
A	12.28.11		REV. PER BCCO COMMENTS

date: 07-22-11
scale: 1/2" = 1"
dr. by: HAMID
chk. by:

drawing no.
W11-41

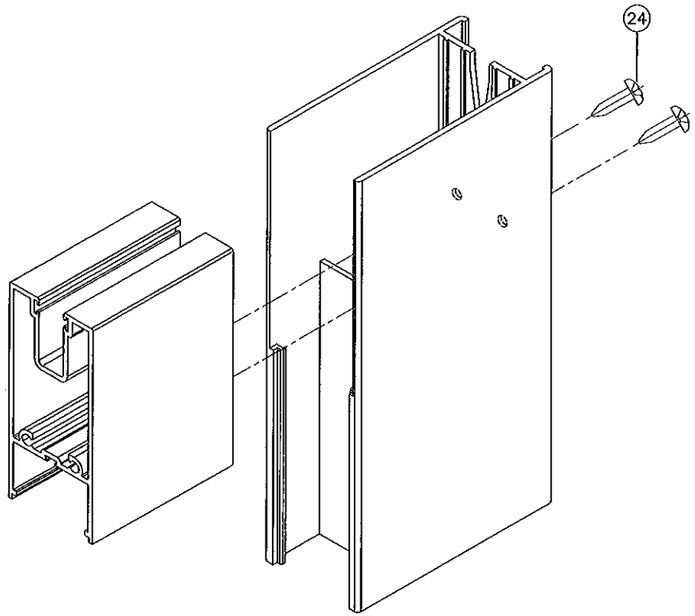

PANEL TOP CORNER

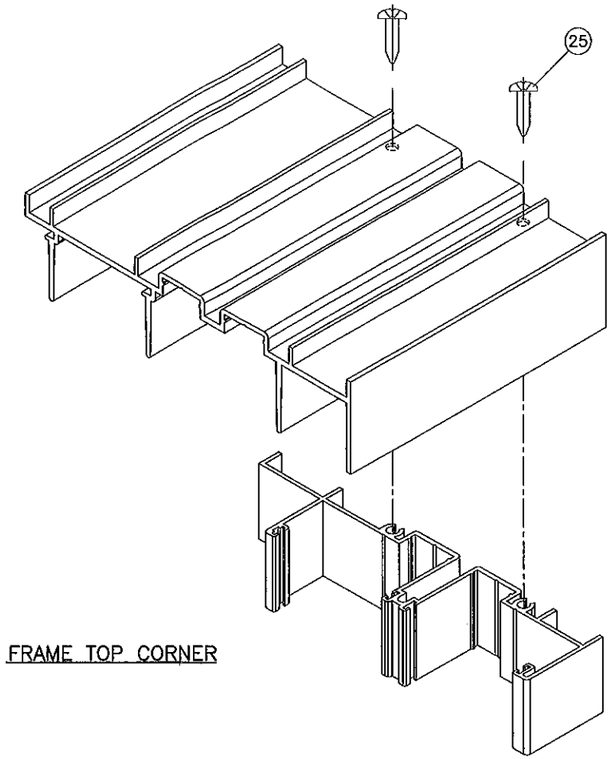

FRAME TOP CORNER

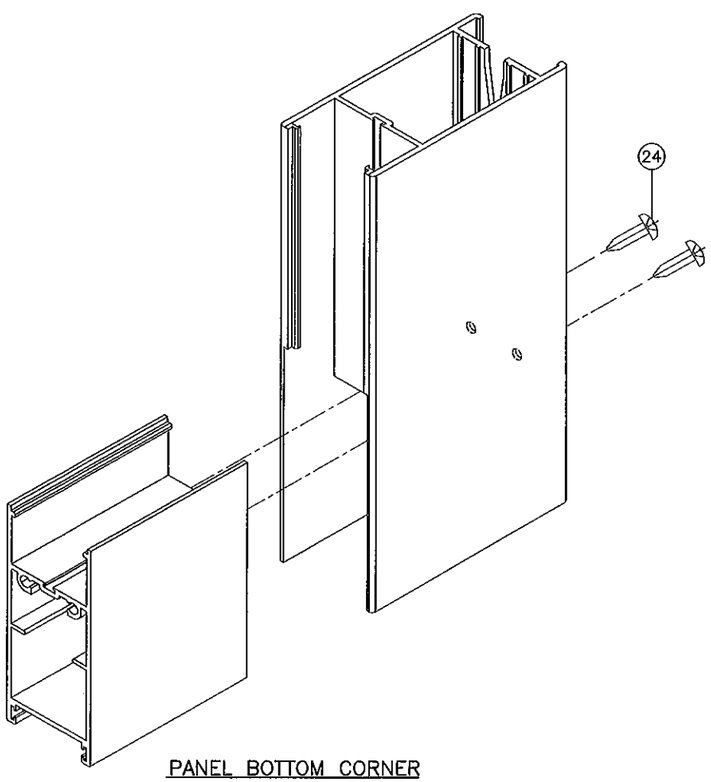

PANEL BOTTOM CORNER

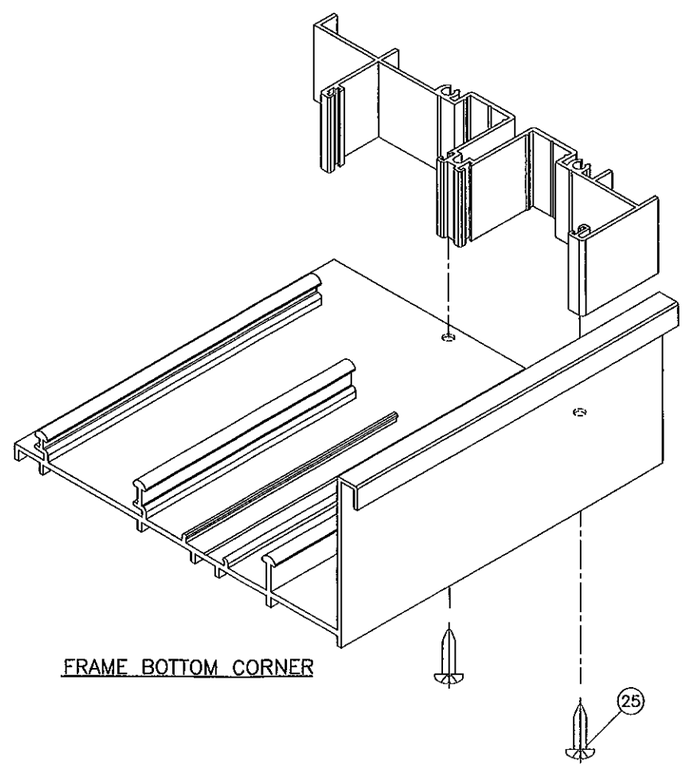

FRAME BOTTOM CORNER

Approved as complying with the Florida Building Code
Date 1/19/12
NOA# 11-0825.07
Miami Dade Product Control
By Ishay I. Chanda

Engr: JAVAD AHMAD
CIVIL
FLA. PE # 70592
C.A.N. 3538

JAN 06 2012

AL-FAROOQ CORPORATION
ENGINEERS & PRODUCT DEVELOPMENT
1235 S.W. 87 AVE
MIAMI, FLORIDA 33174
TEL. (305) 264-8100 FAX. (305) 262-6978
COMP-ANL\W11-41ES

SERIES-6000 ALUM SLIDING GLASS DOOR (L.M.I.)

E.S. WINDOWS, LLC
5220 N.W. 72 AVE. BAY #4
MIAMI, FL. 33166
TEL. (305) 624-7775 FAX. (305) 624-7777

revisions:

no	date	by	description
A	12.28.11		NO CHANGE THIS SHEET

date: 07-22-11
scale: 1/2" = 1"
dr. by: HAMID
chk. by:

drawing no.
W11-41

sheet 13 of 13