MIAMI-DADE COUNTY
DEPARTMENT OF PERMITTING, ENVIRONMENT, AND REGULATORY AFFAIRS (PERA)
BOARD AND CODE ADMINISTRATION DIVISION

MIAMI-DADE COUNTY
PRODUCT CONTROL SECTION
11805 SW 26 Street, Room 208
Miami, Florida 33175-2474
T (786) 315-2590 F (786) 315-2599
www.miamidade.gov/pera/

NOTICE OF ACCEPTANCE (NOA)

United Steel Products Company
14305 Southcross Drive, Suite 200
Burnsville, MN 55306

SCOPE:

This NOA is being issued under the applicable rules and regulations governing the use of construction materials. The documentation submitted has been reviewed and accepted by Miami-Dade County PERA - Product Control Section to be used in Miami Dade County and other areas where allowed by the Authority Having Jurisdiction (AHJ).

This NOA shall not be valid after the expiration date stated below. The Miami-Dade County Product Control Section (In Miami Dade County) and/or the AHJ (in areas other than Miami Dade County) reserve the right to have this product or material tested for quality assurance purposes. If this product or material fails to perform in the accepted manner, the manufacturer will incur the expense of such testing and the AHJ may immediately revoke, modify, or suspend the use of such product or material within their jurisdiction. PERA reserves the right to revoke this acceptance, if it is determined by Miami-Dade County Product Control Section that this product or material fails to meet the requirements of the applicable building code.

This product is approved as described herein, and has been designed to comply with the Florida Building Code, including the High Velocity Hurricane Zone.

DESCRIPTION: Series "DTC", "GTU-100" and "NFM" Steel Wood Connectors and Anchors

APPROVAL DOCUMENT: Drawing No. **MD-DTC/GTU100/NFM**, titled "Wood Connectors DTC/GTU-100/NFM Series", sheets 1 and 2 of 2, dated 10/26/2011, prepared by United Steel Products Company, signed and sealed by Steven A. Brekke, P.E., bearing the Miami-Dade County Product Control revision stamp with the Notice of Acceptance number and expiration date by the Miami-Dade County Product Control Section.

MISSILE IMPACT RATING: None

LABELING: Each unit shall bear a permanent label with the manufacturer's name or logo, city, state and following statement: "Miami-Dade County Product Control Approved or MDCPCA", unless otherwise noted herein.

RENEWAL of this NOA shall be considered after a renewal application has been filed and there has been no change in the applicable building code negatively affecting the performance of this product.

TERMINATION of this NOA will occur after the expiration date or if there has been a revision or change in the materials, use, and/or manufacture of the product or process. Misuse of this NOA as an endorsement of any product, for sales, advertising or any other purposes shall automatically terminate this NOA. Failure to comply with any section of this NOA shall be cause for termination and removal of NOA.

ADVERTISEMENT: The NOA number preceded by the words Miami-Dade County, Florida, and followed by the expiration date may be displayed in advertising literature. If any portion of the NOA is displayed, then it shall be done in its entirety.

INSPECTION: A copy of this entire NOA shall be provided to the user by the manufacturer or its distributors and shall be available for inspection at the job site at the request of the Building Official.

This NOA **renews and revises NOA # 07-1003.10** and consists of this page 1 and evidence page E-1, as well as approval document mentioned above.

The submitted documentation was reviewed by **Carlos M. Utrera, P.E.**

MIAMI-DADE COUNTY APPROVED

12/20/2011

NOTICE OF ACCEPTANCE: EVIDENCE SUBMITTED

A. DRAWINGS

1. Drawing No. **MD-DTC/GTU100/NFM**, titled "Wood Connectors DTC/GTU-100/NFM Series", sheets 1 and 2 of 2, dated 10/26/2011, prepared by United Steel Products Company, signed and sealed by Steven A. Brekke, P.E.

B. TESTS *"Submitted under NOA # 07-1003.10"*

Test reports on upward, downward and lateral loads of wood connectors per ASTM D1761-88 (1995), prepared by Product Testing, Inc.:

	Test Report No.	Wood Connector	Date	Signature
1.	07-6301	GTU-100	06/27/07	C. R. Caudel, P.E.
2.	07-6300	DTC	08/27/07	C. R. Caudel, P.E.
3.	07-6321	NFM-45	09/10/07	C. R. Caudel, P.E.
4.	07-6320	NFM-45U	09/26/07	C. R. Caudel, P.E.
5.	07-6319	NFM-3U	09/24/07	C. R. Caudel, P.E.

B. CALCULATIONS

1. Product evaluation documents, prepared by United Steel Products Company, dated 08/23/2011 and 11/02/2011, signed and sealed by Steven A. Brekke, P.E.

D. QUALITY ASSURANCE

1. Miami-Dade Department of Permitting, Environment, and Regulatory Affairs (PERA)

E. MATERIAL CERTIFICATIONS

1. None.

F. STATEMENTS

1. Statement letter of code conformance to 2007 and 2010 FBC, issued by United Steel Products Company, dated 11/02/2011, signed and sealed by Steven A. Brekke, P.E.
2. Statement letter of no financial interest, issued by United Steel Products Company, dated 08/23/2011, signed and sealed by Steven A. Brekke, P.E.

12/20/2011

Carlos M. Utrera, P.E.
Product Control Examiner
NOA No. 11-0908.07
Expiration Date: October 1, 2016
Approval Date: December 29, 2011

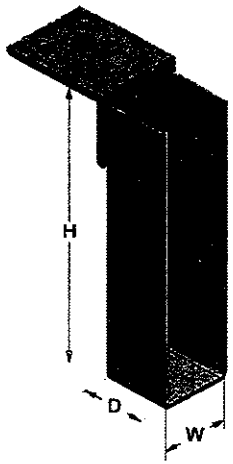

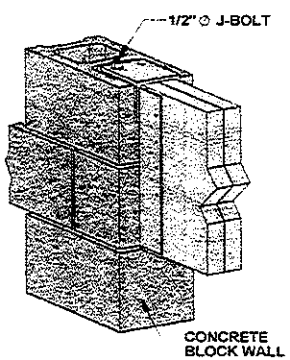

TYPICAL NFM INSTALLATION

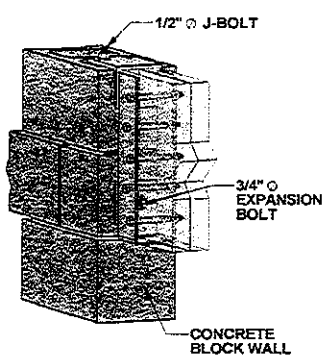

TYPICAL NFMU INSTALLATION

NFM NARROW FLANGE MASONRY HANGER ALLOWABLE LOADS

STOCK NUMBER	TOP ANGLE[1]	U-STRAP STEEL GAGE[2]	DIMENSIONS (inches)			FASTENER SCHEDULE[3,4,5,6]						ALLOWABLE LOADS (lbs)[7,8]	
						Top Angle		Back Plate		Joist		CMU - f'm = 2500 psi	
						Qty	Bolt	Qty	Bolt	Qty	Type	Download	Uplift
			W	H	D							100%	160%
NFM3X8	6" x 4" x 3/8"	7	3 1/8	7 1/4	3 1/2	1	1/2"Ø J-Bolt	--	--	10	10d Common	6720	1415
NFM3X10	6" x 4" x 3/8"	7	3 1/8	9 1/4	3 1/2	1	1/2"Ø J-Bolt	--	--	12	10d Common	6720	1415
NFM3X12	6" x 4" x 3/8"	7	3 1/8	11 1/4	3 1/2	1	1/2"Ø J-Bolt	--	--	14	10d Common	6720	1415
NFM3	6" x 4" x 3/8"	7	3 3/8	11 3/4	3 1/2	1	1/2"Ø J-Bolt	--	--	14	10d Common	7510	1415
NFM35X8	6" x 4" x 3/8"	7	3 5/8	7 1/4	3 1/2	1	1/2"Ø J-Bolt	--	--	10	10d Common	7510	1415
NFM35X10	6" x 4" x 3/8"	7	3 5/8	9 1/4	3 1/2	1	1/2"Ø J-Bolt	--	--	12	10d Common	7510	1415
NFM35X12	6" x 4" x 3/8"	7	3 5/8	11 1/4	3 1/2	1	1/2"Ø J-Bolt	--	--	14	10d Common	7510	1415
NFM35X1178	6" x 4" x 3/8"	7	3 5/8	11 7/8	3 1/2	1	1/2"Ø J-Bolt	--	--	14	10d Common	7510	1415
NFM35X16	6" x 4" x 3/8"	7	3 5/8	16	3 1/2	1	1/2"Ø J-Bolt	--	--	14	10d Common	7510	1415
NFM35X18	6" x 4" x 3/8"	7	3 5/8	18	3 1/2	1	1/2"Ø J-Bolt	--	--	14	10d Common	7510	1415
NFM45	6" x 4" x 3/8"	7	4 3/4	11 3/4	3 1/2	1	1/2"Ø J-Bolt	--	--	14	10d Common	7510	1415
NFM6X1178	6" x 4" x 3/8"	7	5 5/8	11 7/8	3 1/2	1	1/2"Ø J-Bolt	--	--	14	10d Common	7510	1415
NFM6X16	6" x 4" x 3/8"	7	5 5/8	16	3 1/2	1	1/2"Ø J-Bolt	--	--	14	10d Common	7510	1415
NFM6X18	6" x 4" x 3/8"	7	5 5/8	18	3 1/2	1	1/2"Ø J-Bolt	--	--	14	10d Common	7510	1415
NFM3X8U	6" x 4" x 3/8"	7	3 1/8	7 1/4	3 1/2	1	1/2"Ø J-Bolt	1	1/2"Ø Expansion Bolt	3	1/2"Ø Bolt	7130	2580
NFM3X10U	6" x 4" x 3/8"	7	3 1/8	9 1/4	3 1/2	1	1/2"Ø J-Bolt	1	1/2"Ø Expansion Bolt	5	1/2"Ø Bolt	7130	2580
NFM3X12U	6" x 4" x 3/8"	7	3 1/8	11 1/4	3 1/2	1	1/2"Ø J-Bolt	1	1/2"Ø Expansion Bolt	5	1/2"Ø Bolt	7130	2580
NFM3U	6" x 4" x 3/8"	7	3 3/8	11 3/4	3 1/2	1	1/2"Ø J-Bolt	1	1/2"Ø Expansion Bolt	5	1/2"Ø Bolt	7130	3170
NFM35X8U	6" x 4" x 3/8"	7	3 5/8	7 1/4	3 1/2	1	1/2"Ø J-Bolt	1	1/2"Ø Expansion Bolt	3	1/2"Ø Bolt	7130	2580
NFM35X10U	6" x 4" x 3/8"	7	3 5/8	9 1/4	3 1/2	1	1/2"Ø J-Bolt	1	1/2"Ø Expansion Bolt	5	1/2"Ø Bolt	7130	2580
NFM35X12U	6" x 4" x 3/8"	7	3 5/8	11 1/4	3 1/2	1	1/2"Ø J-Bolt	1	1/2"Ø Expansion Bolt	5	1/2"Ø Bolt	7130	2580
NFM35X1178U	6" x 4" x 3/8"	7	3 5/8	11 7/8	3 1/2	1	1/2"Ø J-Bolt	1	1/2"Ø Expansion Bolt	5	1/2"Ø Bolt	7130	2580
NFM35X14U	6" x 4" x 3/8"	7	3 5/8	14	3 1/2	1	1/2"Ø J-Bolt	1	1/2"Ø Expansion Bolt	5	1/2"Ø Bolt	7130	2580
NFM35X16U	6" x 4" x 3/8"	7	3 5/8	16	3 1/2	1	1/2"Ø J-Bolt	1	1/2"Ø Expansion Bolt	5	1/2"Ø Bolt	7130	2580
NFM35X18U	6" x 4" x 3/8"	7	3 5/8	18	3 1/2	1	1/2"Ø J-Bolt	1	1/2"Ø Expansion Bolt	5	1/2"Ø Bolt	7130	2580
NFM45U	6" x 4" x 3/8"	7	4 3/4	11 3/4	3 1/2	1	1/2"Ø J-Bolt	1	1/2"Ø Expansion Bolt	5	1/2"Ø Bolt	10310	3070
NFM6X8U	6" x 4" x 3/8"	7	5 5/8	7 1/4	3 1/2	1	1/2"Ø J-Bolt	1	1/2"Ø Expansion Bolt	3	1/2"Ø Bolt	10310	2580
NFM6X10U	6" x 4" x 3/8"	7	5 5/8	9 1/4	3 1/2	1	1/2"Ø J-Bolt	1	1/2"Ø Expansion Bolt	5	1/2"Ø Bolt	10310	2580
NFM6X12U	6" x 4" x 3/8"	7	5 5/8	11 1/4	3 1/2	1	1/2"Ø J-Bolt	1	1/2"Ø Expansion Bolt	5	1/2"Ø Bolt	10310	2580
NFM6X1178U	6" x 4" x 3/8"	7	5 5/8	11 7/8	3 1/2	1	1/2"Ø J-Bolt	1	1/2"Ø Expansion Bolt	5	1/2"Ø Bolt	10310	2580
NFM6X14U	6" x 4" x 3/8"	7	5 5/8	14	3 1/2	1	1/2"Ø J-Bolt	1	1/2"Ø Expansion Bolt	5	1/2"Ø Bolt	10310	2580
NFM6X16U	6" x 4" x 3/8"	7	5 5/8	16	3 1/2	1	1/2"Ø J-Bolt	1	1/2"Ø Expansion Bolt	5	1/2"Ø Bolt	10310	2580
NFM6X18U	6" x 4" x 3/8"	7	5 5/8	18	3 1/2	1	1/2"Ø J-Bolt	1	1/2"Ø Expansion Bolt	5	1/2"Ø Bolt	10310	2580

For SI: 1 inch = 25.4 mm, 1 lbf = 4.45 N, 1 psi = 6.89 kPa.

[1]Top angle steel conforms to ASTM A36 standards.
[2]U-Strap steel conforms to ASTM A1011 Gr33 standards.
[3]A 10d Common Nail is 3" inches long and 0.148 inch in diameter.
[4]J-Bolts are 1/2"Ø diameter ASTM F1554 installed in a grouted cell with a minimum of 6" embedment.
[5]Expansion bolts are 3/4"Ø diameter ITW Dyna Bolts (or equivalent) with a minimum of 5" embedment
Bolts shall be installed in masonry with grouted cells in accordance to manufacturer's installation specifications.
[6]Bolts installed in the Joist are 1/2"Ø diameter ASTM A307.
[7]Uplift loads have been increased 60% for wind or seismic loads; no further increase shall be permitted.
[8]Allowable loads are based on installation using Southern Pine lumber and testing in accordance with ASTM D1761.

PRODUCT REVISED
as complying with the Florida Building Code
Acceptance No 11-0903.07
Expiration Date 10/01/2016
By
Miami-Dade Product Control

STEVEN A. BREKKE LICENSED No 70432 STATE OF FLORIDA PROFESSIONAL ENGINEER

UNITED STEEL PRODUCTS COMPANY
14305 SOUTHCROSS DRIVE - SUITE 200
BURNSVILLE, MN 55306 PH: 800-328-5934

NAME:	WOOD CONNECTORS DTC/GTU100/NFM SERIES
DATE: 10/26/2011	STEVEN A. BREKKE PROFESSIONAL ENGINEER LICENSE NO. 70432
SHEET: 1 OF 2	DRAWING NO.: MD-DTC/GTU100/NFM SERIES

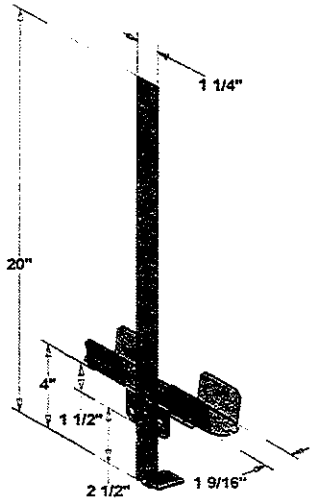

DTC EMBEDDED TRUSS ANCHOR

GTU GIRDER TRUSS HANGER ALLOWABLE LOADS

STOCK NO.	STEEL GAGE[1]	DIMENSIONS (inches)				MINIMUM VERTICAL SIZE REQUIRED[6]	FASTENER SCHEDULE						ALLOWABLE LOADS (lbs.)[6,7]	
							Carrying Member[2,5]		Carried Member[3,4,5]				3 - Ply Carrying Member	
							Bolts		Bolts		Nails		Download	Uplift
		W_1	W_2	H	D		Qty	Dia.	Qty	Dia.	Qty	Size	100%	160%
GTU100	7	7	8	$25^1/_2$	6	2 x 10	6	$^3/_4$	2	$^3/_4$	8	10d Common	9830	9615

FOR SI: 1 inch = 25.4 mm, 1 lbf = 4.45 N, 1 psi = 6.89 kPa

[1]Steel conforms to ASTM A1011 Gr33 standards.

[2]The Carrying Member is defined as the vertically aligned web of nominal 2 x 10 lumber for a minimum three-ply plated-wood truss. The maximum bottom chord size is a 2 x 8.

[3]The Carried Member shall be so constructed as to have a vertically aligned wood member for the two bolts to pass through with a minimum $1^1/_2$ inch edge and $5^1/_4$ inch end distance.

[4]A 10d common nail has a diameter of 0.148 inch and a length of 3 inches.

[5]All bolts are 3/4-inch diameter, and shall meet or exceed the specifications of ASTM A307.

[6]Uplift loads have been increased 60% for wind and seismic loads.

[7]The lumber species is Southern Pine.

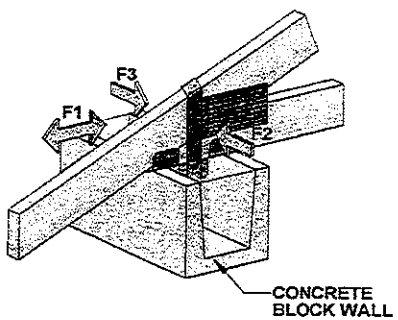

TYPICAL DTC INSTALLATION

PRODUCT REVISED
as complying with the Florida
Building Code
Acceptance No 11-0908.07
Expiration Date 10/01/2016
By
Miami Dade Product Control

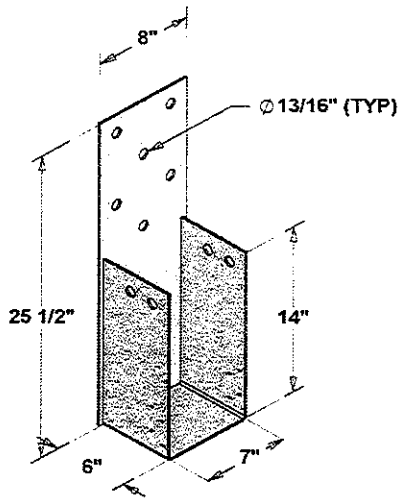

GTU100 GIRDER TRUSS HANGER

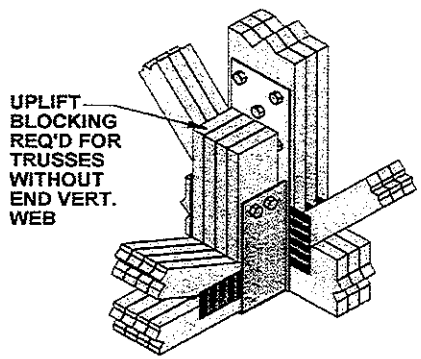

TYPICAL GTU100 INSTALLATION

DTC EMBEDDED TRUSS ANCHOR ALLOWABLE LOADS

STOCK NO.	STEEL GAGE[1,2]		FASTENER SCHEDULE[3]				ALLOWABLE LOADS (lbs.)[4,5]			
			Strap Nails		Seat Nails		Uplift	Perpendicular to Wall (F1)	Parallel to Wall (F2)	Parallel to Wall (F3)
	Strap	Seat	Qty	Size	Qty	Size	160%	160%	160%	160%
DTC	16	20	9	10d x $1^1/_2$	4	10d x $1^1/_2$	1825	1290	1200	840

FOR SI: 1 inch = 25.4 mm, 1 lbf = 4.45 N, 1 psi = 6.89 kPa

[1]Strap steel conforms to ASTM A653 Gr50 standards.

[2]Seat steel conforms to ASTM A653 Gr33 standards.

[3]A 10d x $1^1/_2$ common nail has a diameter of 0.148 inch and a length of $1^1/_2$ inches.

[4]Allowable loads have been increased 60% for wind and seismic loads. No further increase is permitted.

[5]The listed values are for loads applied in one direction and shall not be combined.

[6]The lumber species is Southern Pine.

[7]Minimum concrete strength, f'c, shall be 2500 psi

[8]Minimum strap embedment shall be 4 inches

STEVEN A. BREKKE
LICENSE
No 70432
STATE OF
FLORIDA
PROFESSIONAL ENGINEER

UNITED STEEL PRODUCTS COMPANY
14305 SOUTHCROSS DRIVE - SUITE 200
BURNSVILLE, MN 55306 PH: 800-328-5934

NAME:	WOOD CONNECTORS DTC/GTU100/NFM SERIES
DATE: 10/26/2011	STEVEN A. BREKKE PROFESSIONAL ENGINEER LICENSE NO. 70432
SHEET: 2 OF 2	DRAWING NO.: MD-DTC/GTU100/NFM SERIES