MIAMI-DADE COUNTY
DEPARTMENT OF PERMITTING, ENVIRONMENT, AND REGULATORY AFFAIRS (PERA)
BOARD AND CODE ADMINISTRATION DIVISION

MIAMI-DADE COUNTY
PRODUCT CONTROL SECTION
11805 SW 26 Street, Room 208
Miami, Florida 33175-2474
T (786) 315-2590 F (786) 315-2599
www.miamidade.gov/building

NOTICE OF ACCEPTANCE (NOA)

Easy Awning Systems, Inc.
2766 S. Douglas Road
Miami, Florida 33166

SCOPE:

This NOA is being issued under the applicable rules and regulations governing the use of construction materials. The documentation submitted has been reviewed and accepted by Miami-Dade County PERA-Product Control Section to be used in Miami Dade County and other areas where allowed by the Authority Having Jurisdiction (AHJ).

This NOA shall not be valid after the expiration date stated below. The Miami-Dade County Product Control Division (In Miami Dade County) and/or the AHJ (in areas other than Miami Dade County) reserve the right to have this product or material tested for quality assurance purposes. If this product or material fails to perform in the accepted manner, the manufacturer will incur the expense of such testing and the AHJ may immediately revoke, modify, or suspend the use of such product or material within their jurisdiction. PERA reserves the right to revoke this acceptance, if it is determined by Miami-Dade County Product Control Section that this product or material fails to meet the requirements of the applicable building code.

This product is approved as described herein, and has been designed to comply with the High Velocity Hurricane Zone of the Florida Building Code.

DESCRIPTION: **Aluminum and Canvas Terrace Awning**

APPROVAL DOCUMENT: Drawing No. EA-01, titled " Layze Shade – Series 002 ", prepared by Eastern Engineering Group, last revision #1, dated December 06, 2011, signed and sealed by Gonzalo A. Paz, P.E., on December 06, 2011, bearing the Miami-Dade County Product Control Approval stamp with the Notice of Acceptance number and the approval date by the Miami-Dade County Product Control Section.

MISSILE IMPACT RATING: **None**

LABELING: Each awning shall bear a permanent label with the manufacturer's name or logo, city, state and the following statement: "Miami-Dade County Product Control Approved", unless otherwise noted herein.

RENEWAL of this NOA shall be considered after a renewal application has been filed and there has been no change in the applicable building code negatively affecting the performance of this product.

TERMINATION of this NOA will occur after the expiration date or if there has been a revision or change in the materials, use, and/or manufacture of the product or process. Misuse of this NOA as an endorsement of any product, for sales, advertising or any other purposes shall automatically terminate this NOA. Failure to comply with any section of this NOA shall be cause for termination and removal of NOA.

ADVERTISEMENT: The NOA number preceded by the words Miami-Dade County, Florida, and followed by the expiration date may be displayed in advertising literature. If any portion of the NOA is displayed, then it shall be done in its entirety.

INSPECTION: A copy of this entire NOA shall be provided to the user by the manufacturer or its distributors and shall be available for inspection at the job site at the request of the Building Official.

This NOA consists of this page 1, evidence submitted page E-1 as well as approval document mentioned above. The submitted documentation was reviewed by **Helmy A. Makar, P.E., M.S.**

MIAMI-DADE COUNTY APPROVED

Helmy A. Makar
12/15/2011

NOA No. 11-0908.08
Expiration Date: 12/15/2016
Approval Date: 12/15/2011

Easy Awning Systems, Inc.

NOTICE OF ACCEPTANCE: EVIDENCE SUBMITTED

A. DRAWINGS

1. *Drawing No. EA-01, titled " Layze Shade – Series 002 ", prepared by Eastern Engineering Group, last revision #1, dated December 06, 2011, signed and sealed by Gonzalo A. Paz, P.E., on December 06, 2011.*

B. TESTS

1. *None.*

C. CALCULATIONS

1. *Calculations titled "Layze Shade Series 002 Awning Aluminum frame", prepared by eastern Engineering Group, dated September 06, 2011, 70 sheets, signed and sealed by Gonzalo A. Paz, P.E.*
2. *Calculations titled "Layze Shade Series 002 Awning Aluminum frame", prepared by eastern Engineering Group, dated November 30, 2011, 13 sheets, signed and sealed by Gonzalo A. Paz, P.E.*

D. QUALITY ASSURANCE

1. *By Miami-Dade County Department of Permitting, Environment, and Regulatory Affairs (PERA).*

E. MATERIAL CERTIFICATIONS

1. *None.*

Helmy A. Makar, P.E., M.S.
PERA, Product Control Unit Supervisor
NOA No. 11-0908.08
Expiration Date: 12/15/2016
Approval Date: 12/15/2011

LAYZE SHADE - SERIES 002

ALUMINUM AND FABRIC TERRACE AWNING

TABLE OF CONTENTS

SHEET	REVISION	SHEET DESCRIPTION
EA-01		GENERAL NOTES, INSTALLATION NOTES, TABLE OF CONTENTS, BILL OF MATERIALS AND COMPONENTS
EA-02		ISOMETRICS
EA-03		PLAN VIEW
EA-04		FRONT ELEVATION
EA-05		SIDE ELEVATION
EA-06		ELEMENTS 001 AND 002
EA-07		ELEMENTS 003 AND 004
EA-08		ELEMENTS 005 AND 006
EA-09		ELEMENTS 007
EA-10		ELEMENTS 009 & 010

BILL OF MATERIALS

NO	DESCRIPTION	NOTES	QUANTITY
001	ELEMENT 001	ALUMINUM ALLOY 6061-T6	1
002	ELEMENT 002	ALUMINUM ALLOY 6061-T6	7
003	ELEMENT 003	ALUMINUM ALLOY 6061-T6	7
004	ELEMENT 004	ALUMINUM ALLOY 6061-T6	7
005	ELEMENT 005	ALUMINUM ALLOY 6061-T6	7
006	ELEMENT 006	ALUMINUM ALLOY 6061-T6	1
007	ELEMENT 007	ALUMINUM ALLOY 6061-T6	3
008	ELEMENT 008	5/16" BOLT WITH NUT - ALUMINUM ALLOY 7075-T73 28 UNF	12
009	ELEMENT 009	ALUMINUM ALLOY 6061-T6	3
010	ELEMENT 010	ALUMINUM ALLOY 6061-T6	3
011	ELEMENT 011	1/4" BOLT WITH NUT - ALUMINUM ALLOY 7075-T73 28 UNF	7
012	ELEMENT 012	1/4" KWIK CON II BY HILTI	28
013	ELEMENT 013	1/2" HOT-DIP GALVANIZED KWIK BOLT 3 BY HILTI	28
014	ELEMENT 014	10-16 S.S KWIK-FLEX SCREWS by HILTI or APPROVED EQUAL	6
015	ELEMENT 015	S.S SOCKET SET SCREW 1/4"-20 CONE POINT	24

NOTE:

1- THIS PRODUCT HAS BEEN DESIGNED TO COMPLY WITH THE REQUIREMENTS OF THE FLORIDA BUILDING CODE 2007 EDITION, UNDER THE FOLLOWING CONDITIONS:

-BASIC WIND SPEED OF 90 MPH. (FOR WIND EVENTS GREATER THAN 90 MPH, FABRIC CANVAS SHALL BE REMOVED).
-WIND IMPORTANCE FACTOR=0.87.
-EXPOSURE CATEGORY='C'.
-DIRECTIONALITY FACTOR=0.85.
-TOPOGRAPHIC FACTOR=1.0

(MAXIMUM STRUCTURE HEIGHT WHERE AWNING IS ATTACHED SHALL BE 70 FEET)

- ANCHORS SHALL BE AS LISTED ON BILL OF MATERIALS. QUANTITIES AS SHOWN ON DETAILS. EMBEDMENT TO BASE MATERIAL SHALL BE BEYOND WALL COVERING (STUCCO, TILE ETC.).

- ANCHORING CONDITIONS OTHER THAN THOSE SHOWN ON THESE DETAILS ARE NOT PART OF THIS APPROVAL.

- MATERIALS INCLUDING BUT NOT LIMITED TO STEEL/METAL SCREWS, THAT COME INTO CONTACT WITH OTHER DISSIMILAR MATERIALS SHALL MEET THE REQUIREMENTS OF 2007 FLORIDA BLDG. CODE SECTION 2003.8.4.

MAX. DESIGN PRESSURE RATING
+50/-50 PSF SHORT TERM
5 PSF DEAD LOAD

Approved as complying with the
Florida Building Code
Date 12/15/2011
NOA# 11-0908.08
Miami Dade Product Control
By

GONZALO A. PAZ
LICENSE
No 60734
STATE OF FLORIDA
PROFESSIONAL ENGINEER

EASTERN ENGINEERING GROUP
3401 NW 82 AVE SUITE 370
Miami, Florida 33122
Tel. (305) 599-8133 Fax. (305) 599-8076
www.easterneg.com

REVISIONS

No.	DESCRIPTION	DATE
1	BCIS COMMENTS	12/06/11

JOB No. & NAME: 11 254

DESIGNED & DRAWN: Mario Morales

SCALE : AS SHOWN

LAYZE SHADE - SERIES 002

EASY TERRACE AWNINGS

Address : 2266 DOUGLAS ROAD, MIAMI, FL 33133
Ph : 786-256-4564

☐RAISSA R. LOPEZ, PE (Lic No-58399)
☐GONZALO A. PAZ, PE (Lic No-60734)
CERT. OF AUTHORIZATION No. 26555

COPYRIGHT RESERVED THE CONTRACTOR SHALL VERIFY ALL DIMENSIONS AND CONDITIONS ON THE JOB AND REPORT ANY ERRORS OR OMISSIONS TO EASTERN ENGINEERING GROUP. THE CONTRACTOR SHALL BE RESPONSIBLE FOR ALL ERRORS AND OMISSIONS ARE THE PROPERTY OF EASTERN ENGINEERING GROUP AND MUST BE RETURNED TO EASTERN ENGINEERING GROUP. THEY ARE NOT TO BE USED FOR ANY PURPOSE OTHER THAN THAT STATED ABOVE WITHOUT WRITTEN PERMISSION IS PROHIBITED. SHOP DRAWINGS CHECKED FOR STRUCTURAL REQUIREMENTS ONLY. CAN # 26555

DEC 06 2011

EA-01

SHEET 1 OF 10

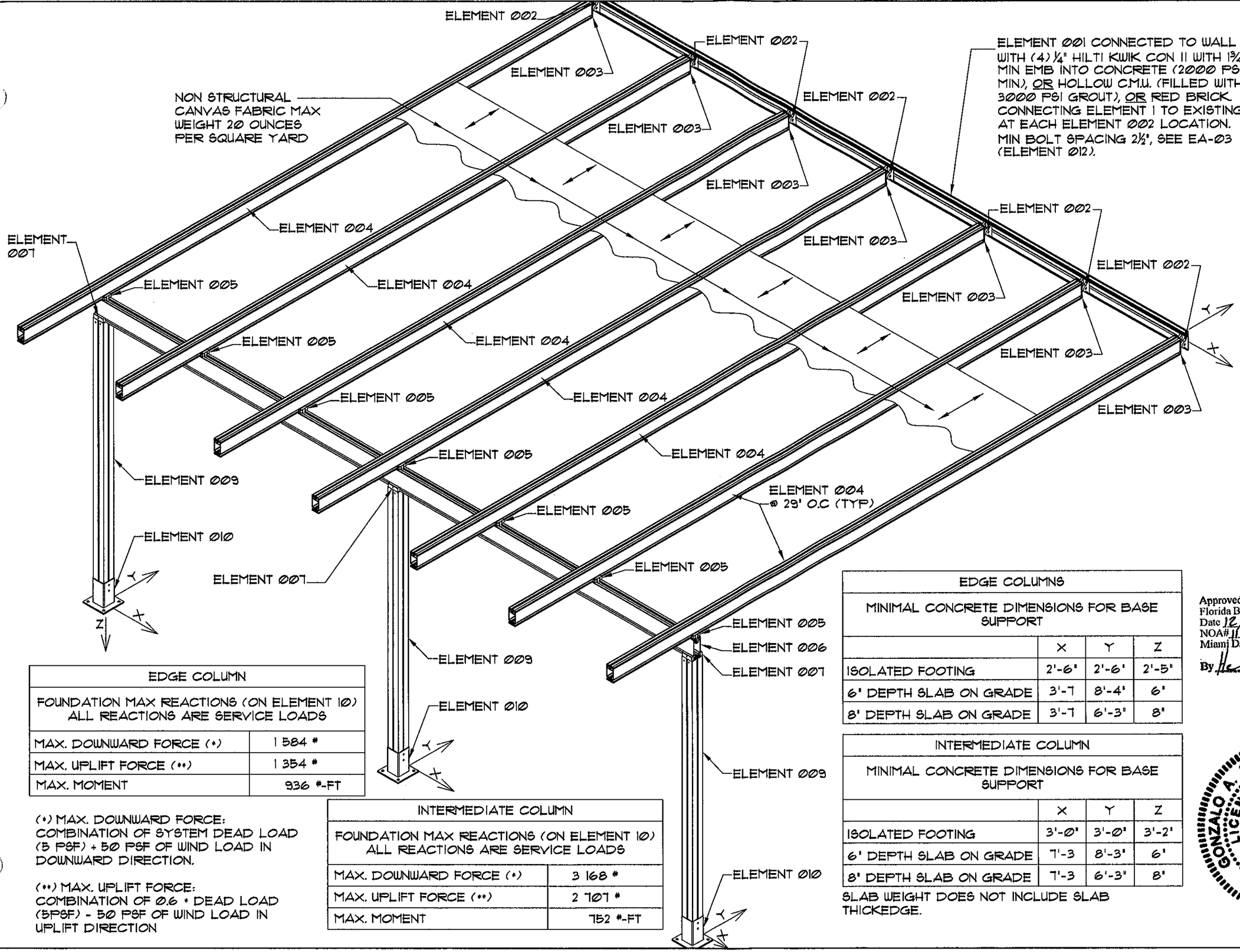

EDGE COLUMN	
FOUNDATION MAX REACTIONS (ON ELEMENT 10) ALL REACTIONS ARE SERVICE LOADS	
MAX. DOWNWARD FORCE (*)	1 584 #
MAX. UPLIFT FORCE (**)	1 354 #
MAX. MOMENT	936 #-FT

(*) MAX. DOWNWARD FORCE:
COMBINATION OF SYSTEM DEAD LOAD (5 PSF) + 50 PSF OF WIND LOAD IN DOWNWARD DIRECTION.

(**) MAX. UPLIFT FORCE:
COMBINATION OF 0.6 * DEAD LOAD (5PSF) - 50 PSF OF WIND LOAD IN UPLIFT DIRECTION

INTERMEDIATE COLUMN	
FOUNDATION MAX REACTIONS (ON ELEMENT 10) ALL REACTIONS ARE SERVICE LOADS	
MAX. DOWNWARD FORCE (*)	3 168 #
MAX. UPLIFT FORCE (**)	2 707 #
MAX. MOMENT	752 #-FT

EDGE COLUMNS			
MINIMAL CONCRETE DIMENSIONS FOR BASE SUPPORT			
	X	Y	Z
ISOLATED FOOTING	2'-6"	2'-6"	2'-5"
6" DEPTH SLAB ON GRADE	3'-7	8'-4"	6"
8" DEPTH SLAB ON GRADE	3'-7	6'-3"	8"

INTERMEDIATE COLUMN			
MINIMAL CONCRETE DIMENSIONS FOR BASE SUPPORT			
	X	Y	Z
ISOLATED FOOTING	3'-0"	3'-0"	3'-2'
6" DEPTH SLAB ON GRADE	7'-3	8'-3"	6"
8" DEPTH SLAB ON GRADE	7'-3	6'-3"	8"

SLAB WEIGHT DOES NOT INCLUDE SLAB THICKEDGE.

Approved as complying with the Florida Building Code
Date 12/15/2011
NOA# 11-0908.08
Miami Dade Product Control
By

GONZALO A. PAZ LICENSE No 60734 STATE OF FLORIDA PROFESSIONAL ENGINEER

DEC 06 2011

EASTERN ENGINEERING GROUP
3401 NW 82 AVE SUITE 970
Miami, Florida 33122
Tel. (305) 599-8133 Fax. (305) 599-8076
www.easternegg.com

REVISIONS		
No.	DESCRIPTION	DATE
1	BCCO COMMENTS	12/06/11

JOB No. & NAME: 11 254
DESIGNED & DRAWN: Mario Morales
SCALE : AS SHOWN

LAYZE SHADE - SERIES 002
EASY TERRACE AWNINGS
Address : 2266 DOUGLAS ROAD, MIAMI, FL 33133
Ph : 786-256-4564

☐ MASSA R. LOPEZ, PE (Lic No-58399)
☐ GONZALO A. PAZ, PE (Lic No-60734)
DEPT. OF AUTHORIZATION No. 26555

VISIT AND BE RESPONSIBLE FOR ALL DIMENSIONS AND CONDITIONS ON THE JOB. NO ALTERATIONS OR CHANGES SHALL BE REPORTED TO EASTERN ENGINEERING GROUP. REPRODUCTION OR REUSE OF THIS DOCUMENT WITHOUT WRITTEN AUTHORIZATION BY EASTERN ENGINEERING GROUP IS PROHIBITED. THE ENGINEER OF RECORD FOR STRUCTURAL REQUIREMENTS ONLY. CAN # 20655

EA-02

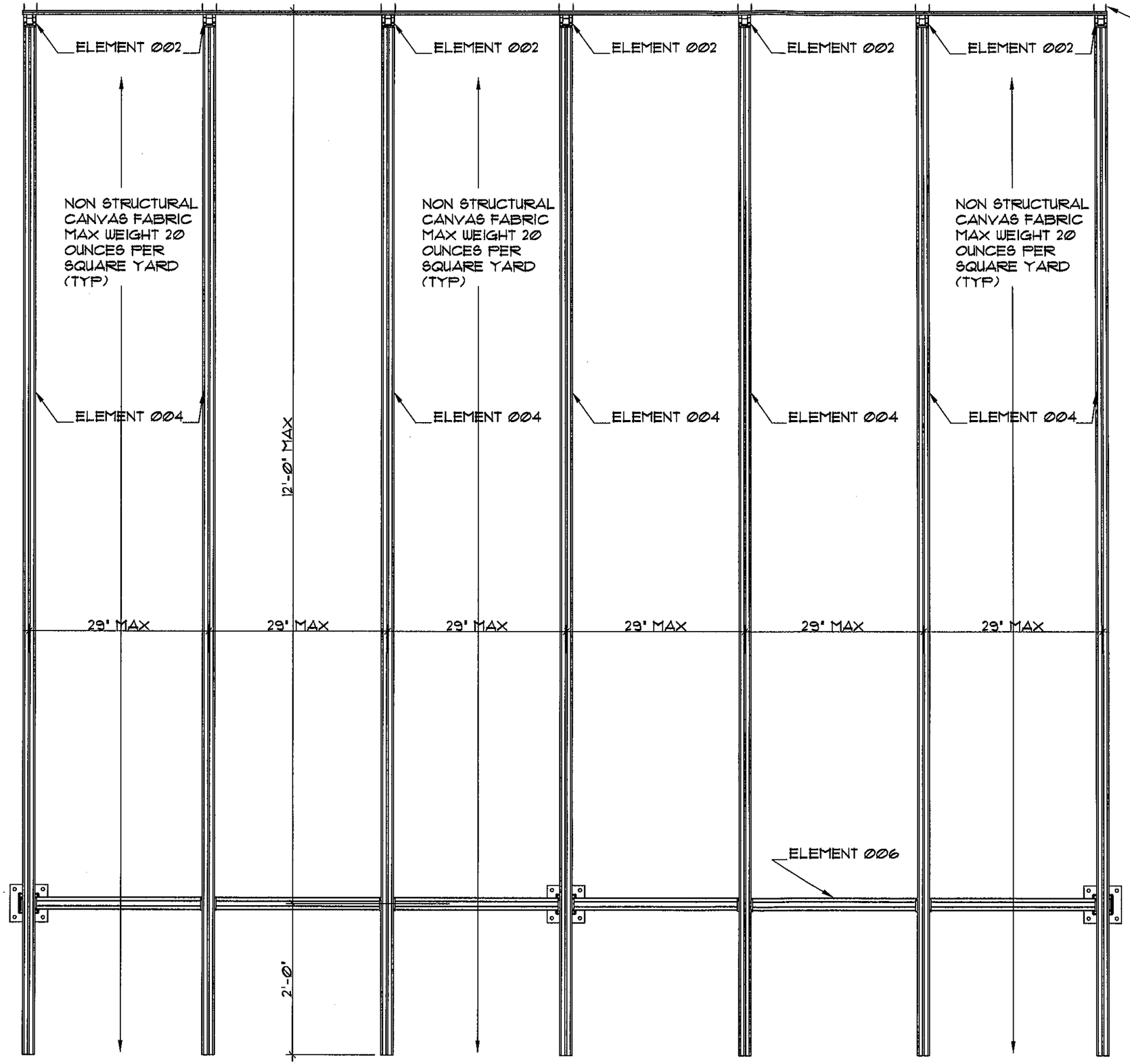

ELEMENT 012
(4) ¼" HILTI KWIK CON II WITH 1¾" MIN EMB INTO CONCRETE (2000 PSI MIN), OR HOLLOW C.M.U. (FILLED WITH 3000 PSI GROUT) OR RED BRICK, CONNECTING ELEMENT 1 TO EXISTING AT EACH ELEMENT 002 LOCATION. MIN BOLT SPACING 2½". (TYP)

Approved as complying with the Florida Building Code
Date 12/15/2011
NOA# 11-0908.08
Miami Dade Product Control
By

GONZALO A. PAZ
LICENSE
No 60734
STATE OF FLORIDA
PROFESSIONAL ENGINEER

DEC 06 2011

A
EA-3

PLAN VIEW
SCALE: 3/4"=1'-0"

EASTERN ENGINEERING GROUP
3401 NW 82 AVE SUITE 370
Miami, Florida 33122
Tel. (305) 599-8133 Fax. (305) 599-8076
www.easternegg.com

REVISIONS		
No.	DESCRIPTION	DATE
1.	BCID COMMENTS	12/06/11

JOB No. & NAME: 11 254

DESIGNED & DRAWN: Mario Morales

SCALE : AS SHOWN

LAYZE SHADE - SERIES 002

EASY TERRACE AWNINGS

Address : 2266 DOUGLAS ROAD, MIAMI, FL 33133

Ph : 786-256-4564

☐ RAISSA R. LOPEZ, PE (Lic No-58399)
☐ GONZALO A. PAZ, PE (Lic No-60734)
CERT. OF AUTHORIZATION No. 26835

COPYRIGHT RESERVED. THE CONTRACTOR SHALL VERIFY ALL DIMENSIONS AND CONDITIONS. DO NOT SCALE THE DRAWING. ANY ERRORS OR OMISSIONS SHALL BE REPORTED TO THE ENGINEERS GROUP without delay. THE COPYRIGHTS OF EASTERN ENGINEERS GROUP, REPRODUCTION OR USE FOR ANY PURPOSE OTHER THAN THAT AUTHORIZED BY EASTERN ENGINEERS GROUP IS PROHIBITED. SHOP DRAWINGS, CODED FOR STRUCTURAL REINFORCING ONLY, ARE FREE

EA-03

SHEET 3 OF 10

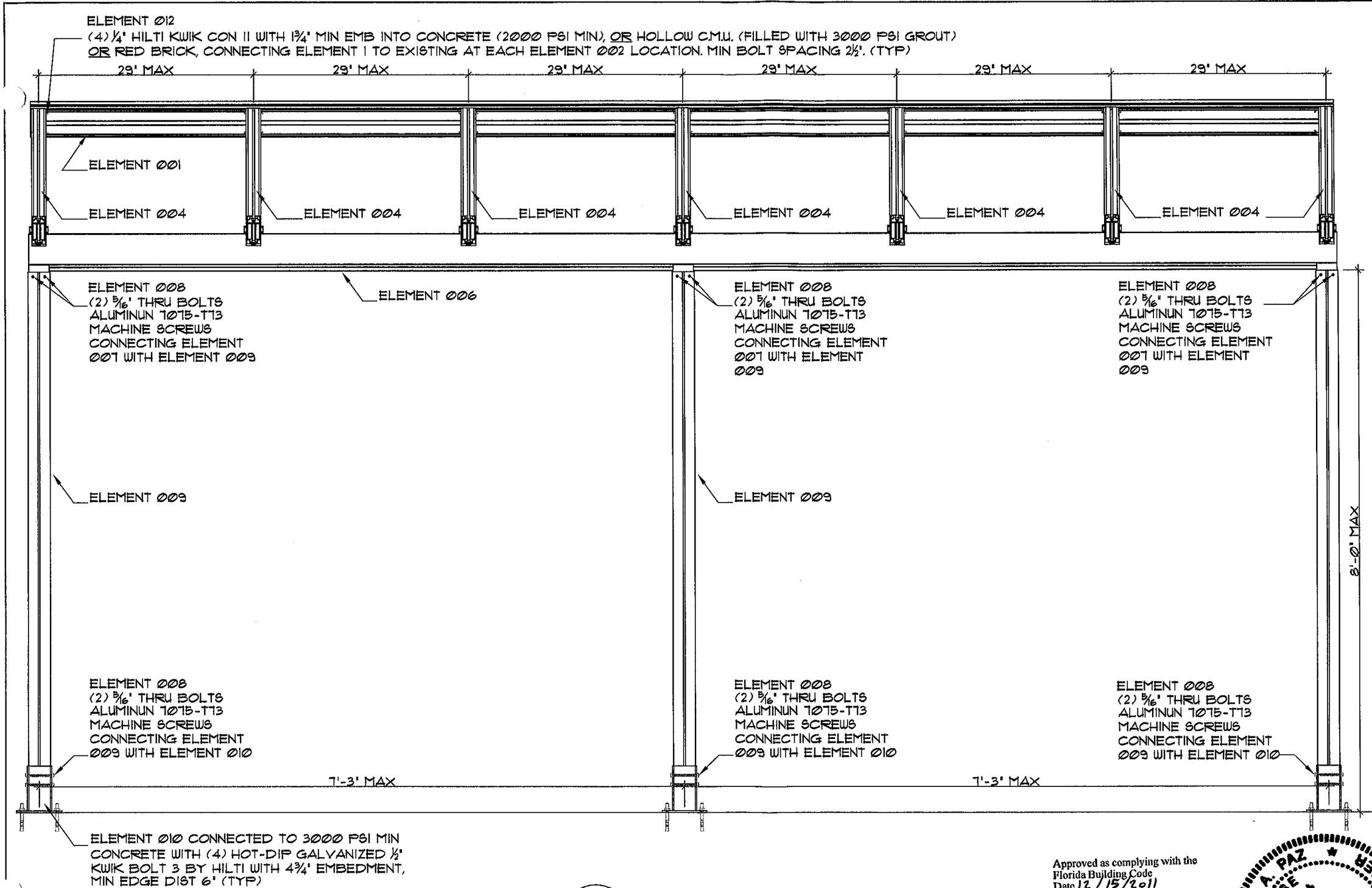

A / EA-4 FRONT ELEVATION

SCALE: 1"=1'-0"

Approved as complying with the
Florida Building Code
Date 12/15/2011
NOA# 11-0908.08
Miami Dade Product Control
By

GONZALO A. PAZ
LICENSE
No 60734
STATE OF FLORIDA
PROFESSIONAL ENGINEER

DEC 0 6 2011

EASTERN ENGINEERING GROUP
3401 NW 82 AVE SUITE 370
Miami, Florida 33122
Tel. (305) 599-8133 Fax. (305) 599-8076
www.easternegg.com

REVISIONS		
No.	DESCRIPTION	DATE
1	BCCO COMMENTS	11/29/11

JOB No. & NAME: 11 254

DESIGNED & DRAWN: Mario Morales

SCALE : AS SHOWN

LAYZE SHADE - SERIES 002

EASY TERRACE AWNINGS

Address : 2266 DOUGLAS ROAD, MIAMI, FL 33133

Ph : 786-256-4564

RAISSA R. LOPEZ, PE (Lic No-58299)
GONZALO A. PAZ, PE (Lic No-60734)
DEPT. OF AUTHORIZATION No. 26855

VERIFY AND BE RESPONSIBLE FOR ALL DIMENSIONS. DO NOT SCALE THE DRAWING. ANY DEFICIENCIES OR DISCREPANCIES MUST BE REPORTED TO THE ENGINEER OF RECORD IMMEDIATELY. THE COMPONENTS OF EASTERN ENGINEERING GROUP'S INSTRUMENTS OF SERVICE, INCLUDING BUT NOT LIMITED TO, REPRODUCTION OR MODIFICATION OF THESE DOCUMENTS WITHOUT WRITTEN AUTHORIZATION BY EASTERN ENGINEERING GROUP, IS PROHIBITED. SHOP DRAWINGS, CALCULATIONS, STRUCTURAL DESIGNS, CAD FILES

EA-04

SHEET 4 OF 10

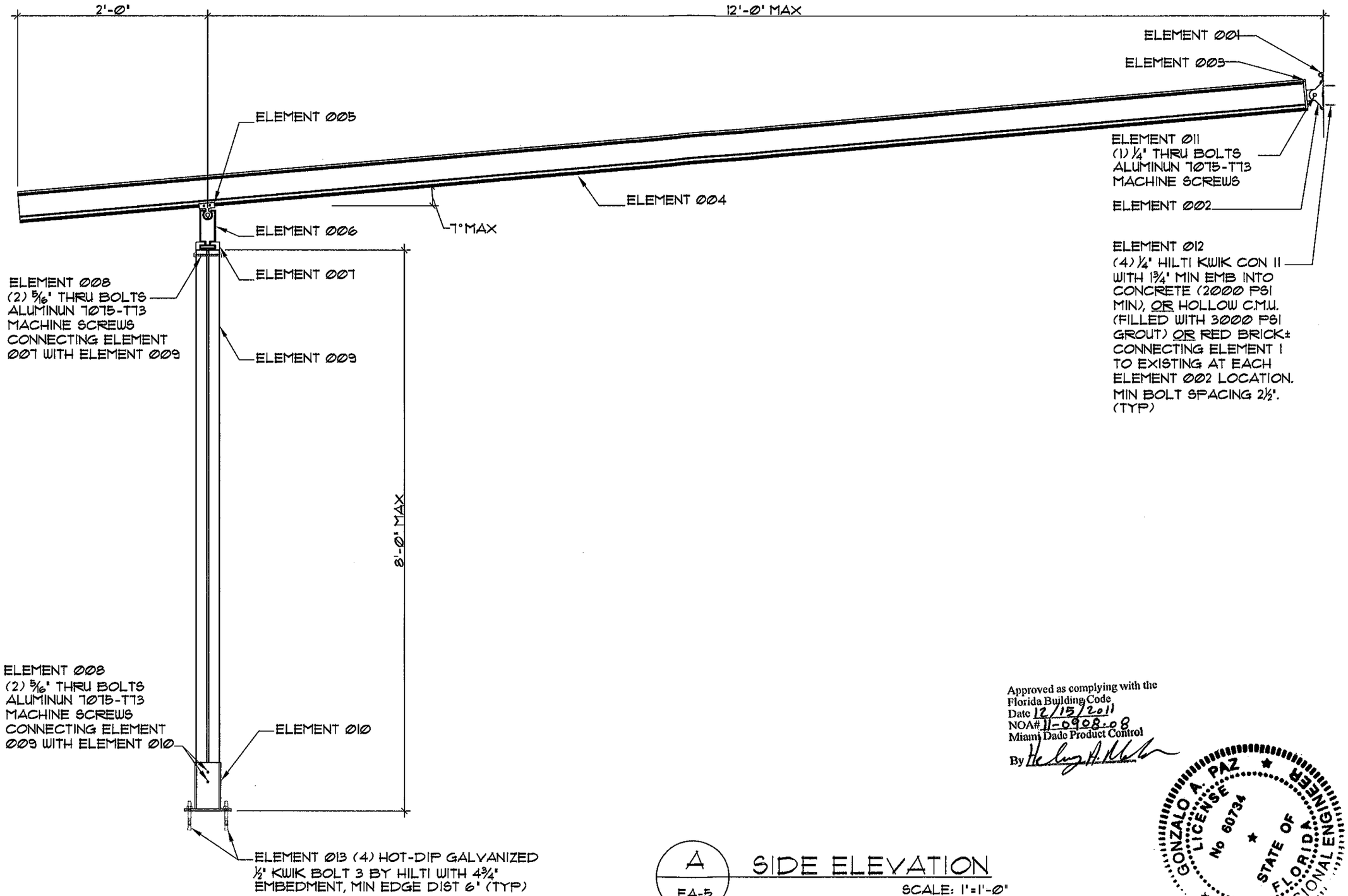

A
EA-5

SIDE ELEVATION

SCALE: 1"=1'-0"

Approved as complying with the
Florida Building Code
Date 12/15/2011
NOA# 11-0908.08
Miami Dade Product Control
By [signature]

GONZALO A. PAZ
LICENSE
No 60734
STATE OF FLORIDA
PROFESSIONAL ENGINEER

DEC 08 2011

EASTERN ENGINEERING GROUP
3401 NW 82 AVE SUITE 370
Miami, Florida 33122
Tel. (305) 599-8133 Fax. (305) 599-8076
www.easterneg.com

REVISIONS		
No.	DESCRIPTION	DATE
1	BOCO COMMENTS	11/30/11

JOB No. & NAME: 11 254
DESIGNED & DRAWN: Mario Morales
SCALE : AS SHOWN

LAYZE SHADE - SERIES 002
EASY TERRACE AWNINGS
Address : 2266 DOUGLAS ROAD, MIAMI, FL 33133
Ph : 786-256-4564

☐ RAISSA R. LOPEZ, PE (Lic No-39399)
☑ GONZALO A. PAZ, PE (Lic No-60734)
CERT. OF AUTHORIZATION No. 26655

COPYRIGHT RESERVED. THE CONTRACTOR SHALL VERIFY AND BE RESPONSIBLE FOR ALL DIMENSIONS. DO NOT SCALE THIS DRAWING. ANY ERRORS OR OMISSIONS SHALL BE REPORTED TO EASTERN ENGINEERS GROUP WITHOUT DELAY. THE COPYRIGHTS TO ALL DESIGNS AND DRAWINGS ARE THE PROPERTY OF EASTERN ENGINEERS GROUP. REPRODUCTION OR USE FOR ANY PURPOSE OTHER THAN THAT AUTHORIZED BY EASTERN ENGINEERS GROUP IS PROHIBITED. SHOP DRAWINGS CHECKED FOR STRUCTURAL REQUIREMENTS ONLY CAN # 26655

EA-05
SHEET 5 OF 10

ALL DIMESIONS ARE IN INCHES

ELEMENT 001

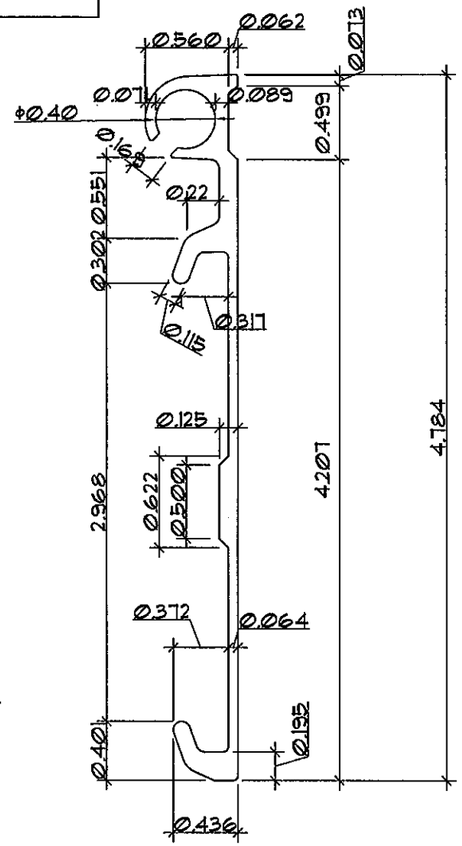

SIDE VIEW
SC: 1:1

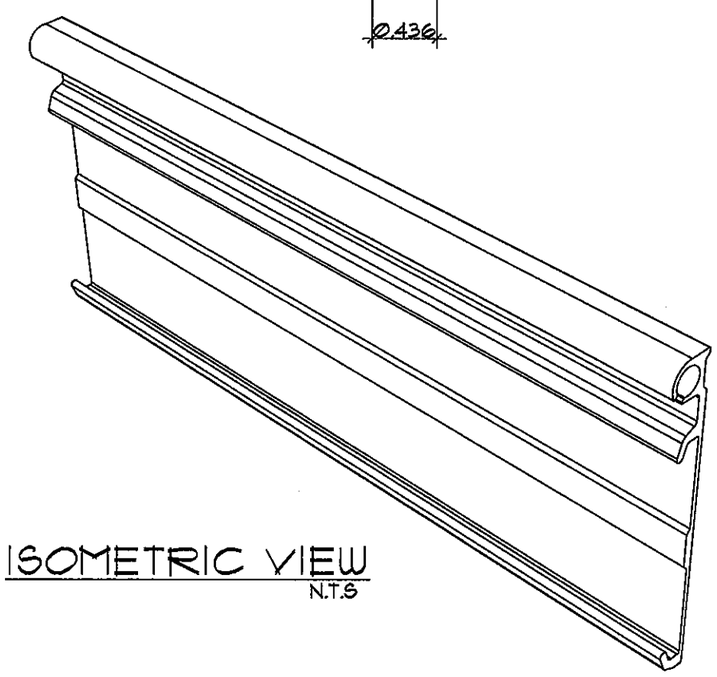

ISOMETRIC VIEW
N.T.S

ELEMENT 002

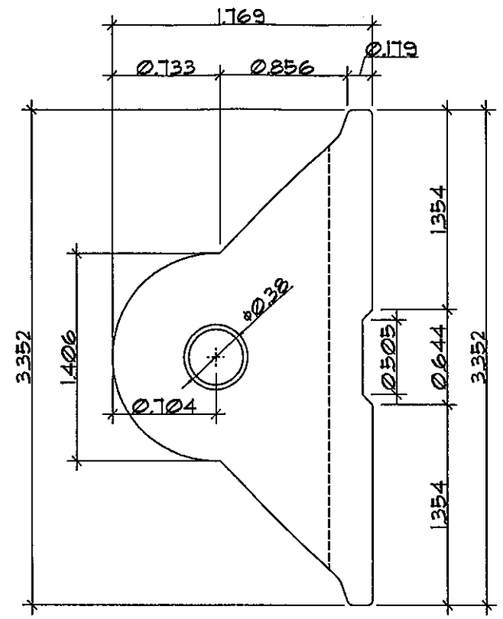

SIDE VIEW
SC: 1:1

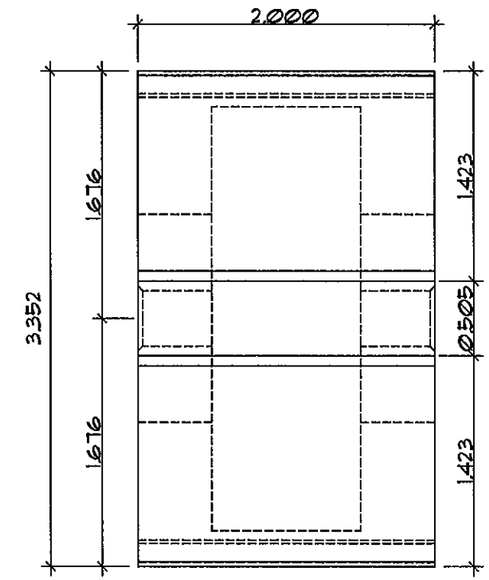

FRONT VIEW
SC: 1:1

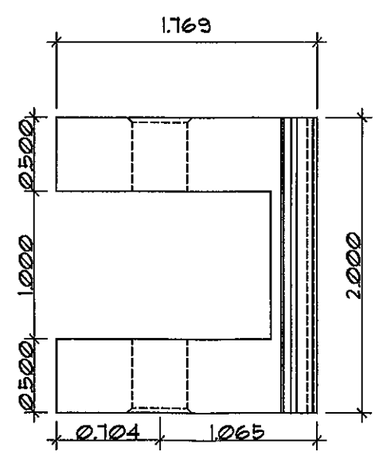

TOP VIEW
SC: 1:1

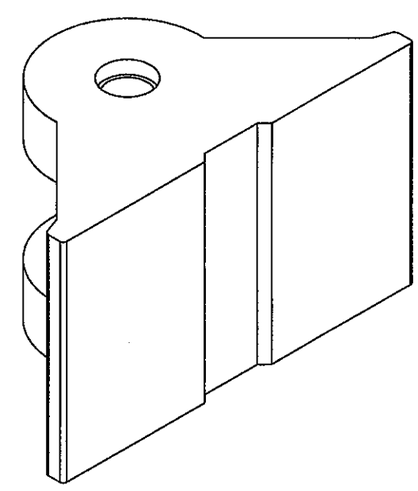

ISOMETRIC VIEW
N.T.S

Approved as complying with the Florida Building Code
Date 12/15/2011
NOA# 11-0908.08
Miami Dade Product Control
By [signature]

GONZALO A. PAZ
LICENSE
No 60734
STATE OF FLORIDA
PROFESSIONAL ENGINEER

DEC 06 2011

EASTERN ENGINEERING GROUP
3401 NW 82 AVE SUITE 370
Miami, Florida 33122
Tel. (305) 599-8133 Fax. (305) 599-8076
www.easternegr.com

REVISIONS		
No.	DESCRIPTION	DATE
1	BCCO COMMENTS	11/30/11

JOB No. & NAME: 11 254
DESIGNED & DRAWN: Mario Morales
SCALE : AS SHOWN

LAYZE SHADE - SERIES 002
EASY TERRACE AWNINGS
Address : 2266 DOUGLAS ROAD, MIAMI, FL 33133
Ph : 786-256-4564

☐ RAISSA R. LOPEZ, PE (Lic No-59399)
☑ GONZALO A. PAZ, PE (Lic No-60734)
CERT. OF AUTHORIZATION No. 26655
COPYRIGHT RESERVED: THE CONTRACTOR SHALL VERIFY AND BE RESPONSIBLE FOR ALL DIMENSIONS. DO NOT SCALE THE DRAWING. ANY ERRORS OR OMISSIONS SHALL BE REPORTED TO EASTERN ENGINEERING GROUP WITHOUT DELAY. THE COPYRIGHTS TO ALL DESIGNS AND DRAWINGS ARE THE PROPERTY OF EASTERN ENGINEERING GROUP. REPRODUCTION OR USE FOR ANY PURPOSE OTHER THAN THAT AUTHORIZED BY EASTERN ENGINEERING GROUP IS PROHIBITED. SHOP DRAWINGS CHECKED FOR STRUCTURAL REQUIREMENTS ONLY CAN # 26555

EA-06
SHEET 6 OF 10

ALL DIMESIONS ARE IN INCHES

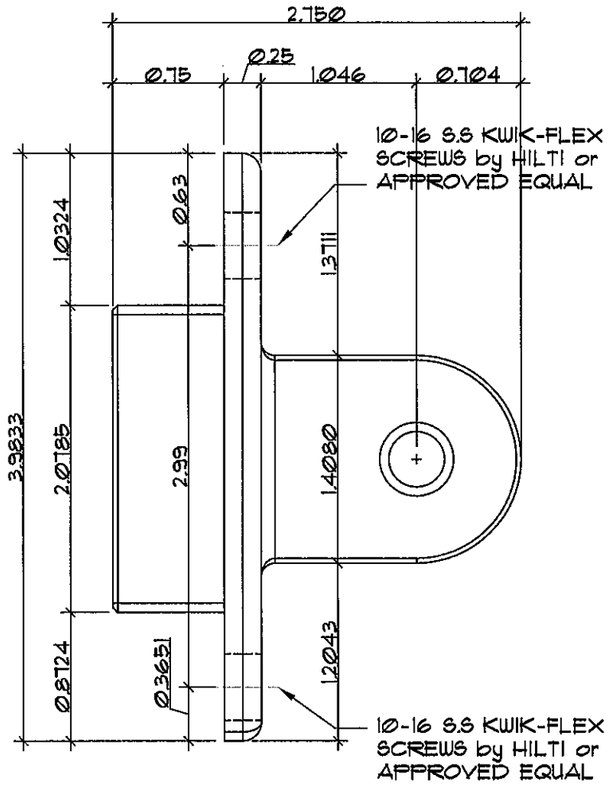

SIDE VIEW
SC: 1:1

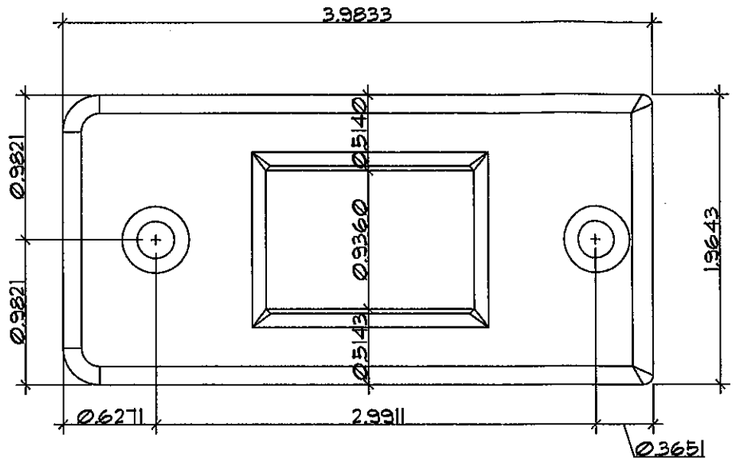

FRONT VIEW

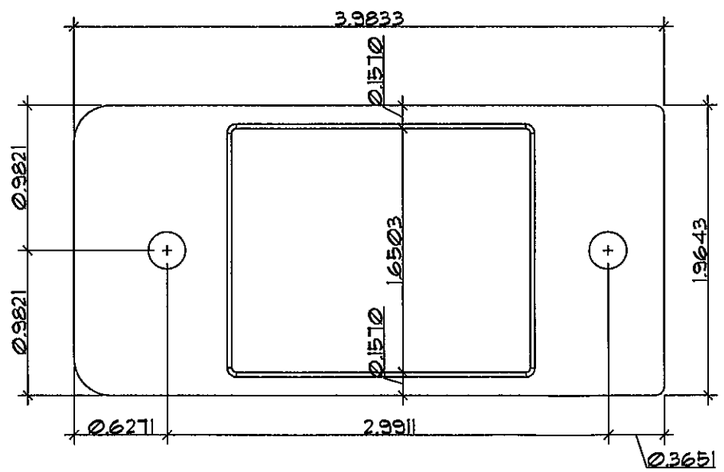

BOTTOM VIEW

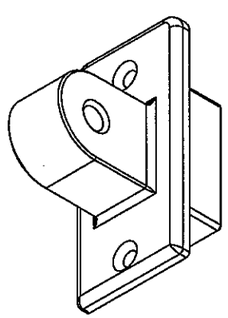

ISOMETRIC VIEW
N.T.S

ELEMENT 003

ELEMENT 004

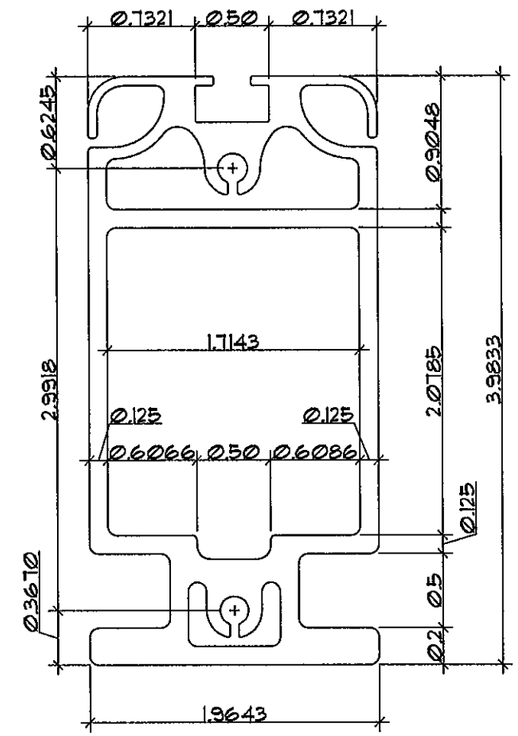

FRONT VIEW
SC: 1:1

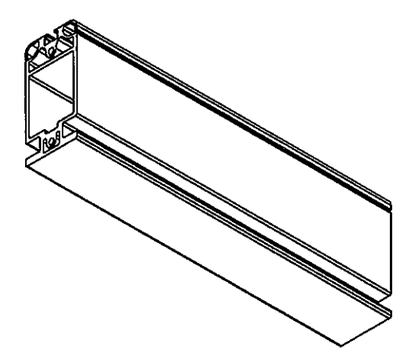

ISOMETRIC VIEW
N.T.S

Approved as complying with the Florida Building Code
Date 12/15/2011
NOA# 11-0908.08
Miami Dade Product Control
By

GONZALO A. PAZ LICENSE No 60734 STATE OF FLORIDA PROFESSIONAL ENGINEER

DEC 06 2011

EASTERN ENGINEERING GROUP
3401 NW 82 AVE SUITE 970
Miami, Florida 33122
Tel. (305) 599-8133 Fax. (305) 599-8076
www.easternegg.com

REVISIONS		
No.	DESCRIPTION	DATE
1	BCO COMMENTS	11/29/11

JOB No. & NAME: 11 254
DESIGNED & DRAWN: Mario Morales
SCALE : AS SHOWN

LAYZE SHADE - SERIES 002
EASY TERRACE AWNINGS
Address : 2266 DOUGLAS ROAD, MIAMI, FL 33133
Ph : 786-256-4564

☐ MASSA R. LOPEZ, PE (Lic No-58399)
☑ GONZALO A. PAZ, PE (Lic No-60734)
CERT. OF AUTHORIZATION No. 26655

COPYRIGHT RESERVED. THIS DRAWING IS THE COPYRIGHT OF EASTERN ENGINEERING GROUP. REPRODUCTION OR USE WITHOUT WRITTEN PERMISSION IS PROHIBITED. DIMENSIONS SHALL BE REPORTED TO EASTERN ENGINEERING GROUP WHEN DIFFERENCES EXIST BETWEEN THE DRAWINGS AND FIELD MEASUREMENTS. THE DRAWINGS ARE THE PROPERTY OF EASTERN ENGINEERING GROUP, REPRODUCTION OR USE WITHOUT WRITTEN PERMISSION IS PROHIBITED. AUTHORIZED BY EASTERN ENGINEERING GROUP TO ISSUE STRUCTURAL REQUIREMENTS ONLY. CAA # 26655

EA-07

SHEET 7 OF 10

ALL DIMESIONS ARE IN INCHES

ELEMENT 005

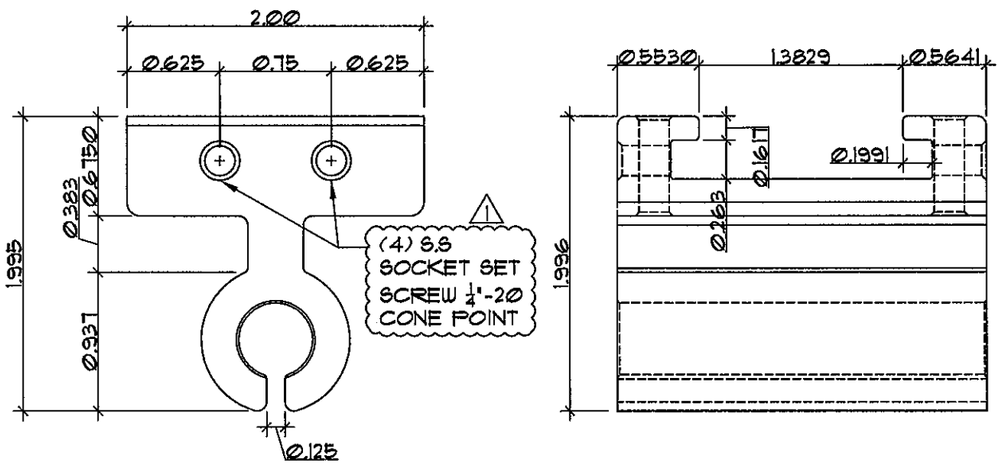

FRONT VIEW
SC: 1:1

TOP VIEW
SC: 1:1

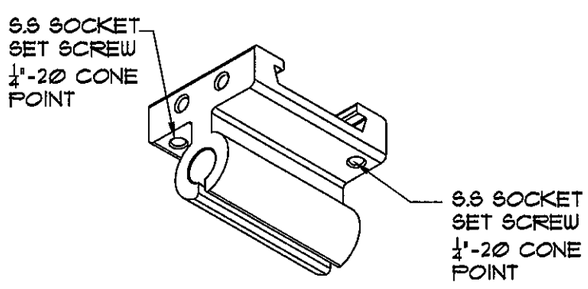

ISOMETRIC VIEW
N.T.S

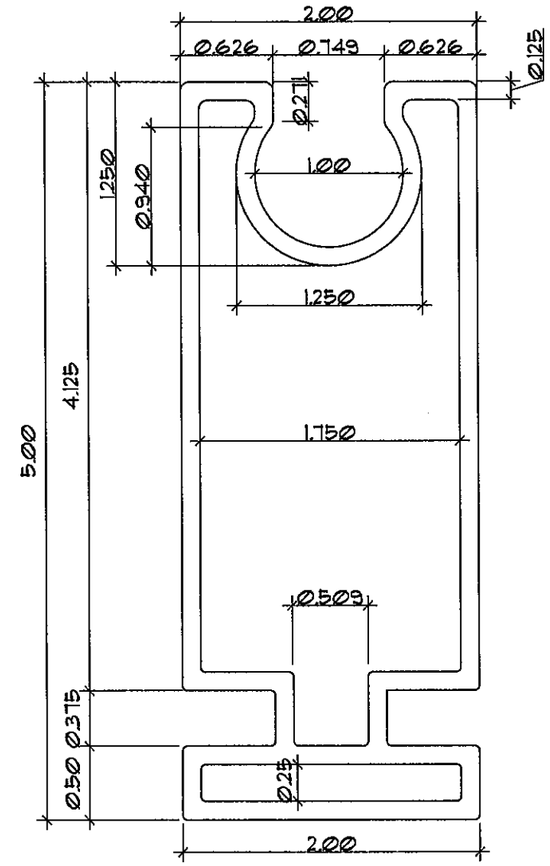

FRONT VIEW
SC: 1:1

ELEMENT 006

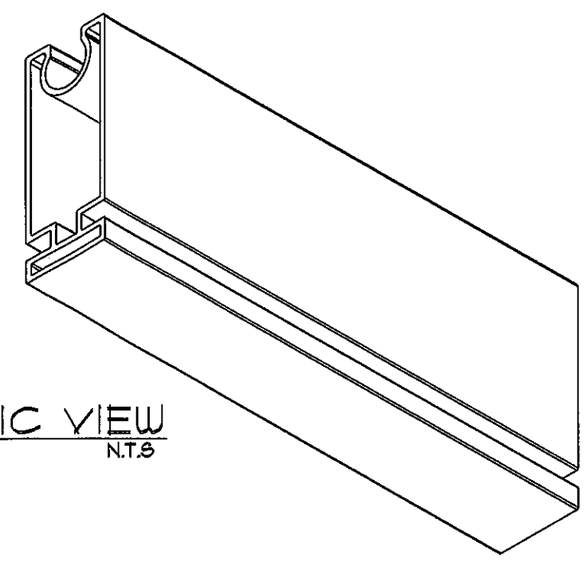

ISOMETRIC VIEW
N.T.S

Approved as complying with the Florida Building Code
Date 12/15/2011
NOA# 11-0908.08
Miami Dade Product Control
By [signature]

GONZALO A. PAZ
LICENSE
No 60734
STATE OF FLORIDA
PROFESSIONAL ENGINEER

DEC 06 2011

EASTERN ENGINEERING GROUP
3401 NW 82 AVE SUITE 370
Miami, Florida 33122
Tel. (305) 599-8133 Fax. (305) 599-8076
www.easternegr.com

REVISIONS

No.	DESCRIPTION	DATE
1	BCCO COMMENTS	11/30/11

JOB No. & NAME: 11 254
DESIGNED & DRAWN: Mario Morales
SCALE : AS SHOWN

LAYZE SHADE - SERIES 002
EASY TERRACE AWNINGS
Address : 2266 DOUGLAS ROAD, MIAMI, FL 33133
Ph : 786-256-4564

☐ RAISSA R. LOPEZ, PE (Lic No-59399)
☑ GONZALO A. PAZ, PE (Lic No-60734)
SERT. OF AUTHORIZATION No. 26655

COPYRIGHT RESERVED: THE CONTRACTOR SHALL VERIFY AND BE RESPONSIBLE FOR ALL DIMENSIONS. DO NOT SCALE THE DRAWING. ANY ERRORS OR OMISSIONS SHALL BE REPORTED TO EASTERN ENGINEERING GROUP WITHOUT DELAY. THE COPYRIGHTS OF EASTERN ENGINEERING GROUP, REPRODUCTION OR USE FOR ANY PURPOSE OTHER THAN THAT AUTHORIZED BY EASTERN ENGINEERING GROUP IS PROHIBITED. SHOP DRAWINGS CHECKED FOR STRUCTURAL REQUIREMENTS ONLY CAN # 26655

EA-08

ALL DIMESIONS ARE IN INCHES

ELEMENT 007

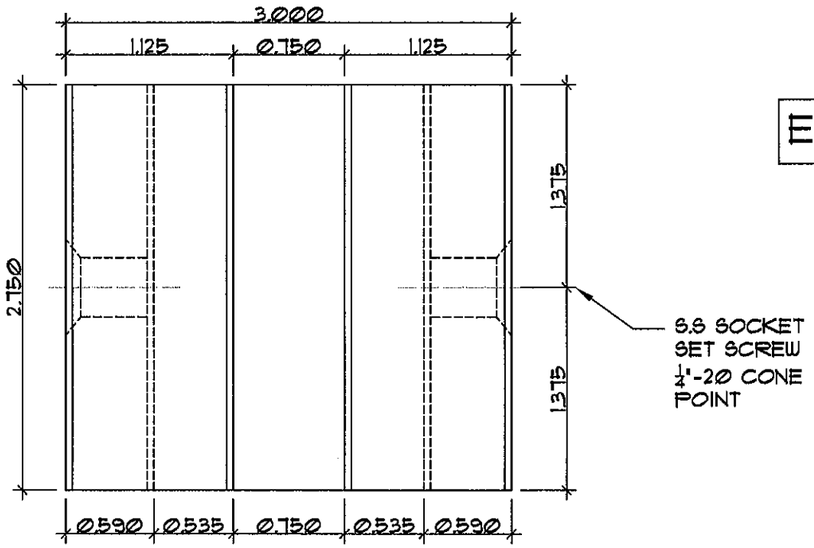

TOP VIEW
SC: 1:1

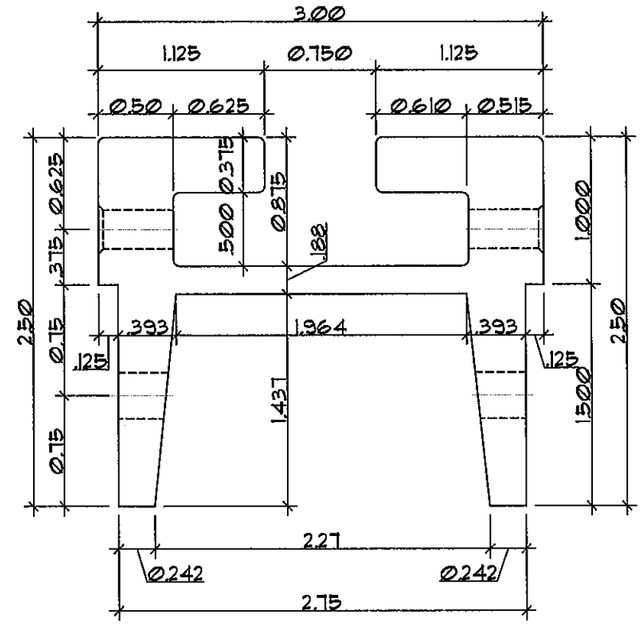

SIDE VIEW
SC: 1:1

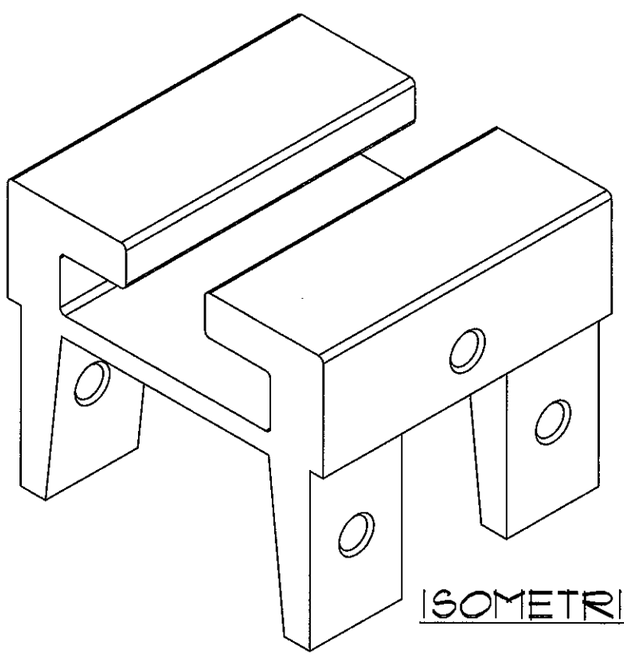

ISOMETRIC VIEW
N.T.S

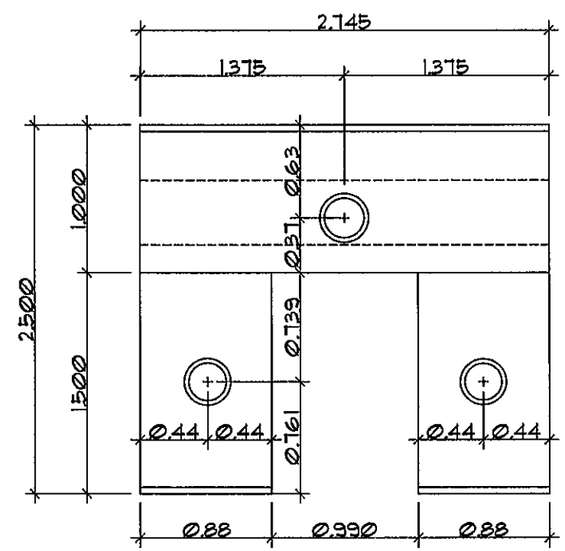

FRONT VIEW
SC: 1:1

Approved as complying with the Florida Building Code
Date 12/15/2011
NOA# 11-0908.08
Miami Dade Product Control
By [signature]

GONZALO A. PAZ
LICENSE
No 60734
STATE OF FLORIDA
PROFESSIONAL ENGINEER

DEC 06 2011

EASTERN ENGINEERING GROUP
3401 NW 82 AVE SUITE 370
Miami, Florida 33122
Tel. (305) 599-8133 Fax. (305) 599-8076
www.easterneg.com

REVISIONS

No.	DESCRIPTION	DATE
1	BCCO COMMENTS	11/30/11

JOB No. & NAME: 11 254
DESIGNED & DRAWN: Mario Morales
SCALE : AS SHOWN

LAYZE SHADE - SERIES 002
EASY TERRACE AWNINGS
Address : 2266 DOUGLAS ROAD, MIAMI, FL 33133
Ph : 786-256-4564

☐ RAISSA R. LOPEZ, PE (Lic No-59399)
☑ GONZALO A. PAZ, PE (Lic No-60734)
CERT. OF AUTHORIZATION No. 26655

COPYRIGHT RESERVED: THE CONTRACTOR SHALL VERIFY AND BE RESPONSIBLE FOR ALL DIMENSIONS. DO NOT SCALE THE DRAWING. ANY ERRORS OR OMISSIONS SHALL BE REPORTED TO EASTERN ENGINEERING GROUP WITHOUT DELAY. THE COPYRIGHTS TO ALL DESIGNS AND DRAWINGS ARE THE PROPERTY OF EASTERN ENGINEERING GROUP. REPRODUCTION OR USE FOR ANY PURPOSE OTHER THAN THAT AUTHORIZED BY EASTERN ENGINEERING GROUP IS PROHIBITED. SHOP DRAWINGS CHECKED FOR STRUCTURAL REQUIREMENTS ONLY CAN # 26655

EA-09

ALL DIMESIONS ARE IN INCHES

ELEMENT 009

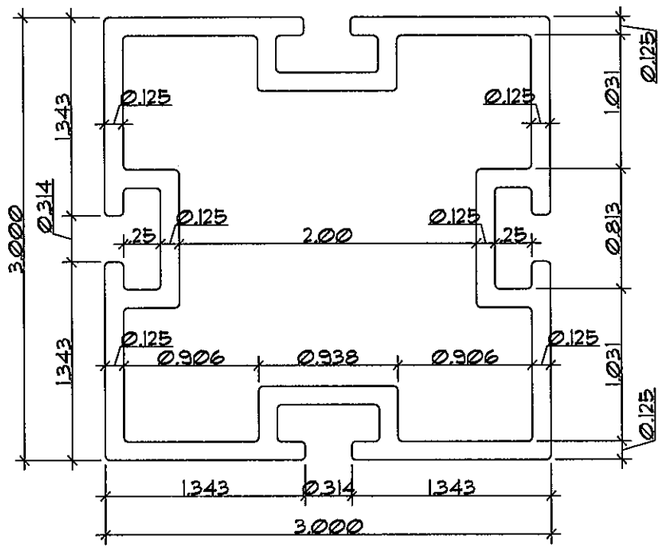

FRONT VIEW
SC: 1:1

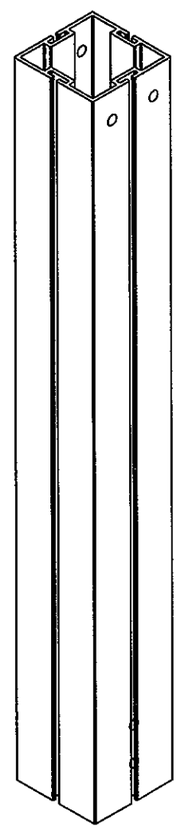

ISOMETRIC VIEW
N.T.S

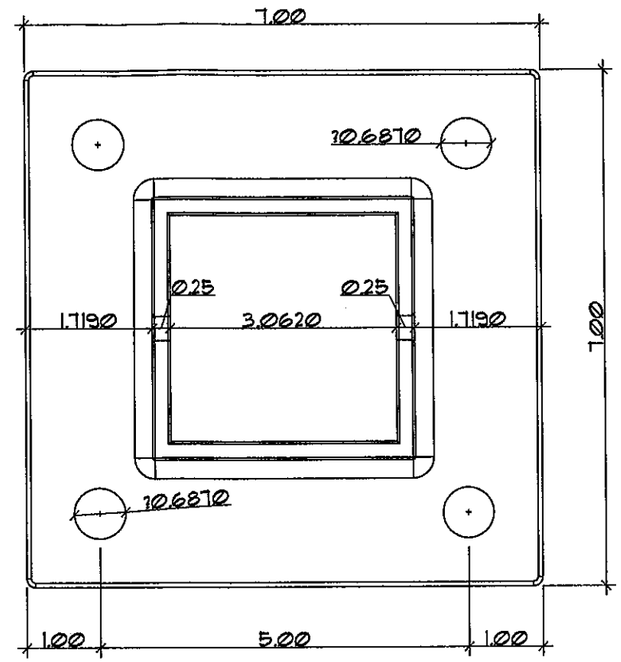

TOP VIEW
SC: 1"=2"

ELEMENT 010

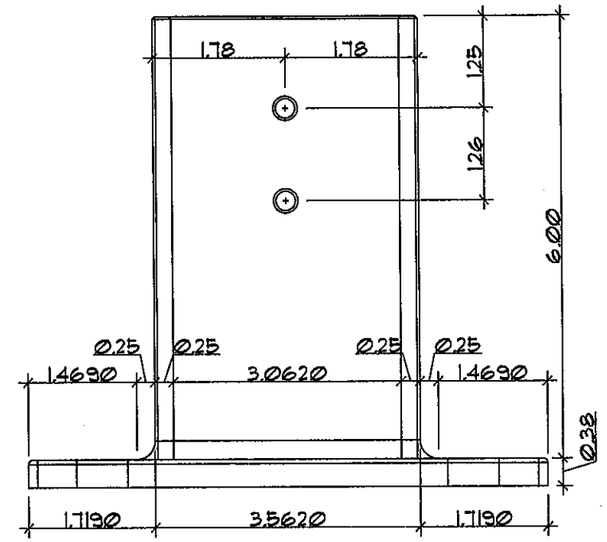

SIDE VIEW
SC: 1"=2"

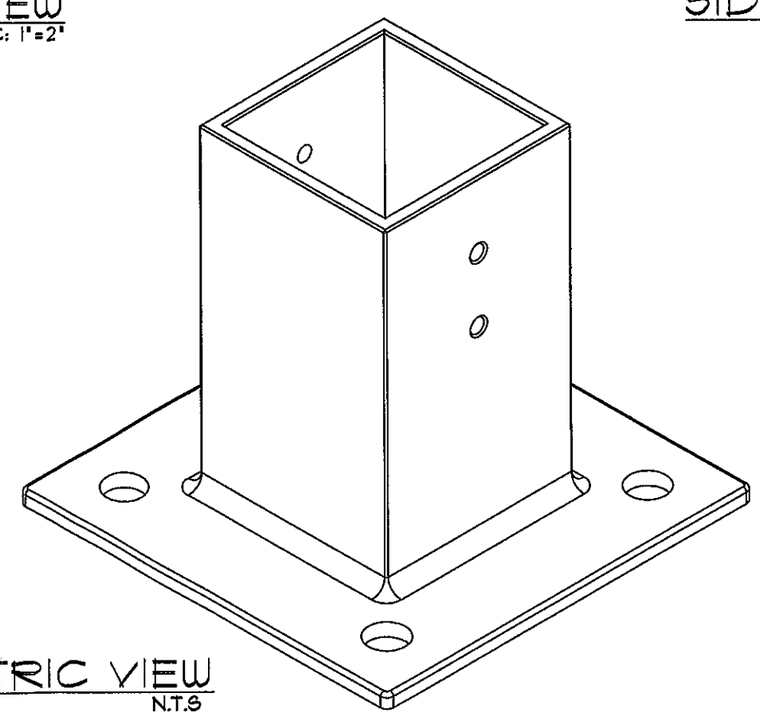

ISOMETRIC VIEW
N.T.S

Approved as complying with the Florida Building Code
Date 12/15/2011
NOA# 11-0908.08
Miami Dade Product Control
By [signature]

GONZALO A. PAZ
LICENSE
No 60734
STATE OF FLORIDA
PROFESSIONAL ENGINEER

DEC 16 2011

EASTERN ENGINEERING GROUP
3401 NW 82 AVE SUITE 370
Miami, Florida 33122
Tel. (305) 599-8133 Fax. (305) 599-8076
www.easternegg.com

REVISIONS

No.	DESCRIPTION	DATE
1	BCCO COMMENTS	11/30/11

JOB No. & NAME: 11 254
DESIGNED & DRAWN: Mario Morales
SCALE : AS SHOWN

LAYZE SHADE - SERIES 002
EASY TERRACE AWNINGS
Address : 2266 DOUGLAS ROAD, MIAMI, FL 33133
Ph : 786-256-4564

☐ RAISSA R. LOPEZ, PE (Lic No-59399)
☑ GONZALO A. PAZ, PE (Lic No-60734)
CERT. OF AUTHORIZATION No. 26655

COPYRIGHT RESERVED: THE CONTRACTOR SHALL VERIFY AND BE RESPONSIBLE FOR ALL DIMENSIONS. DO NOT SCALE THE DRAWING. ANY ERRORS OR OMISSIONS SHALL BE REPORTED TO EASTERN ENGINEERS GROUP WITHOUT DELAY. THE COPYRIGHTS TO ALL DESIGNS AND DRAWINGS ARE THE PROPERTY OF EASTERN ENGINEERS GROUP. REPRODUCTION OR USE FOR ANY PURPOSE OTHER THAN THAT AUTHORIZED BY EASTERN ENGINEERS GROUP IS PROHIBITED. SHOP DRAWINGS CHECKED FOR STRUCTURAL REQUIREMENTS ONLY CAN # 26655

EA-10

SHEET 10 OF 10