MIAMI-DADE COUNTY
DEPARTMENT OF PERMITTING, ENVIRONMENT, AND REGULATORY AFFAIRS (PERA)
BOARD AND CODE ADMINISTRATION DIVISION

NOTICE OF ACCEPTANCE (NOA)

MIAMI-DADE COUNTY
PRODUCT CONTROL SECTION
11805 SW 26 Street, Room 208
Miami, Florida 33175-2474
T (786) 315-2590 F (786) 315-2599
www.miamidade.gov/pera/

CGI Windows & Doors
10100 N. W. 25th Street
Miami, Fl. 33172

SCOPE:

This NOA is being issued under the applicable rules and regulations governing the use of construction materials. The documentation submitted has been reviewed and accepted by Miami-Dade County PERA -Product Control Section to be used in Miami Dade County and other areas where allowed by the Authority Having Jurisdiction (AHJ).

This NOA shall not be valid after the expiration date stated below. The Miami-Dade County Product Control Section (In Miami Dade County) and/or the AHJ (in areas other than Miami Dade County) reserve the right to have this product or material tested for quality assurance purposes. If this product or material fails to perform in the accepted manner, the manufacturer will incur the expense of such testing and the AHJ may immediately revoke, modify, or suspend the use of such product or material within their jurisdiction. PERA reserves the right to revoke this acceptance, if it is determined by Miami-Dade County Product Control Section that this product or material fails to meet the requirements of the applicable building code.
This product is approved as described herein, and has been designed to comply with the Florida Building Code, including the High Velocity Hurricane Zone.

DESCRIPTION: Series "450" Outswing Aluminum Door w/wo Sidelites - Impact

APPROVAL DOCUMENT: Drawing No.**W98-01**, titled "Series 450 Doors & Sidelites", sheets 1, 1.1, 2 through 7.1 of 7, prepared by Al-Farooq Corporation, dated 10/20/97 and last revised on July 14, 2009, signed and sealed by Arshad Viqar, P.E., bearing the Miami-Dade County Product Control Renewal stamp with the Notice of Acceptance number and expiration date by the Miami-Dade County Product Control Section.

MISSILE IMPACT RATING: Large and Small Missile Impact

Limitations:

1. See sheets 6 & 7 for unit sizes, anchors and design pressure ratings
2. For mulled units lower design pressure of doors or mullion shall control.
3. 1x or 2x bucks to be properly secured to transfer the imposed loads.
4. Doors with saddle threshold (SS) is not approved for water rating.

LABELING: Each unit shall bear a permanent label with the manufacturer's name or logo, city, state and series and following statement: "Miami-Dade County Product Control Approved", unless otherwise noted herein.

RENEWAL of this NOA shall be considered after a renewal application has been filed and there has been no change in the applicable building code negatively affecting the performance of this product.

TERMINATION of this NOA will occur after the expiration date or if there has been a revision or change in the materials, use, and/or manufacture of the product or process. Misuse of this NOA as an endorsement of any product, for sales, advertising or any other purposes shall automatically terminate this NOA. Failure to comply with any section of this NOA shall be cause for termination and removal of NOA.

ADVERTISEMENT: The NOA number preceded by the words Miami-Dade County, Florida, and followed by the expiration date may be displayed in advertising literature. If any portion of the NOA is displayed, then it shall be done in its entirety.

INSPECTION: A copy of this entire NOA shall be provided to the user by the manufacturer or its distributors and shall be available for inspection at the job site at the request of the Building Official.
This NOA **renews NOA # 09-0723.04** and consists of this page 1 and evidence pages E-1, as well as approval document mentioned above.
The submitted documentation was reviewed by **Ishaq I. Chanda, P.E.**

10/25/11

MIAMI-DADE COUNTY APPROVED

NOTICE OF ACCEPTANCE: EVIDENCE SUBMITTED

A. DRAWINGS

1. Manufacturer's die drawings and sections (Original in file# **09-0723.04**)
2. Drawing No.**W98-01**, titled "Series 450 Doors & Sidelites", sheets 1, 1.1, 2 through 7.1 of 7, prepared by Al-Farooq Corporation, dated 10/20/97 and last revised on July 14, 2009, signed and sealed by Arshad Viqar, P.E.

B. TESTS (Original in file # **09-0723.04**) Original test conducted per FBC, PA 201, 202 &203-94 now known as FBC, TAS 201, 202 & 203-94.

1. Test report on 1) Air Infiltration Test, per PA 202-94
   2) Uniform Static Air Pressure Test, Loading per PA 202-94
   3) Water Resistance Test, per PA 202-94.
   4) Forced Entry Test, per SFBC 3603.2 (b) and PA 202-94
   5) Large Missile Impact Test per SFBC and PA201-94
   6) Cyclic Wind Pressure Loading per SFBC and PA203-94

Along with manufacturer's parts and section drawing marked-up drawings of aluminum In/out swing door w/sidelites, by Hurricane Testing Laboratory, Inc., Test Report No. **HTL-97055 (0080-912-97)** dated 09/23/97 thru 02/27/98 for specimen #1, 2, 3, 4 tested per PA202-94, specimen #4, 5A, 5B, 5C tested per PA201-94 & PA203-94, signed and sealed by Timothy S. Marshall, P.E.

Along with manufacturer's parts and section drawing marked-up drawings of aluminum out swing door w/sidelites, by Hurricane Testing Laboratory, Inc., Test Report No. **HTL-01071 (0080-0402-02)** dated 04/01/2002 tested per PA201-94 & PA203-94, signed and sealed by Vinu J. Abraham, P.E.

2. Renewal Reference: Additional test report # **HTL-0080-0304.11**, issued by Hurricane Testing lab dated 08/03/11, signed & sealed by Vinu J. Abraham, P.E.

C. CALCULATIONS (Original in file # **09-0723.04**)

1. Anchor verification calculations, complying w/ FBC 2007, prepared by Al-Farooq Corporation, dated July 14, 2009, signed and sealed by Arshad Viqar, P.E.
2. Glazing complies with ASTME-1300-02 &-04

D. QUALITY ASSURANCE

1. Miami Dade Department of Permitting, Environment, and Regulatory Affairs (PERA).

E. MATERIAL CERTIFICATIONS

1. Notice of Acceptance No. 09-0127.13 issued to Solutia, Inc. for "*Solutia Interlayers for laminated glass*", expiring on 04/04/2014.

F. STATEMENTS (Original in file # **09-0723.04**)

1. Statement letter of conformance and "no financial interest", dated July 06, 2009, prepared by Al-Farooq Corporation, signed by Arshad Viqar, P.E.
2. Letter of lab compliance, part of the above test reports.

G. OTHER

1. This NOA **renews NOA # 09-0723.04,** expiring Nov. 09, 2011.
2. Previous associated files #06-0127.02, 03-0422.02, 01-1109.03 and 98-0608.20
3. Test proposal # **09-0033**, approved on 05/09/97.

Ishaq I. Chanda

Ishaq I. Chanda, P.E.
Product Control Examiner
NOA No 11-0912.12
Expiration Date: November 09, 2016
Approval Date: November 04, 2011

TYPICAL ELEVATIONS

TYPICAL ANCHORS SPACED AS SHOWN IN DETAILS AND CHARTS.
ANCHORS TO BE AT 6" FROM CORNERS
MAX. SPACING 24" O.C. AT HEAD & SILL.

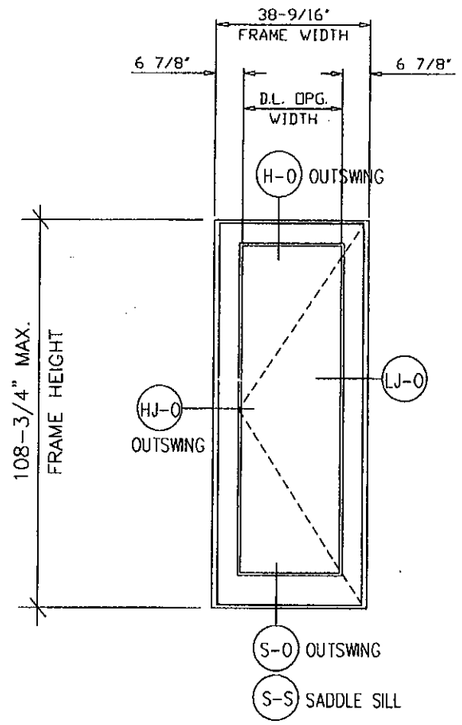

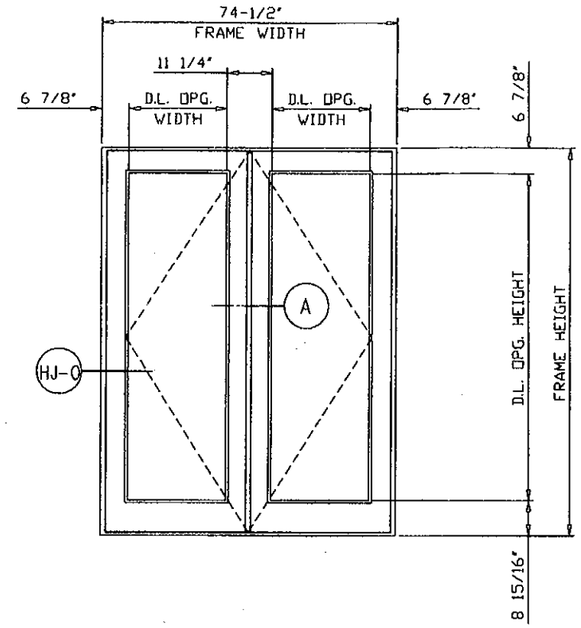

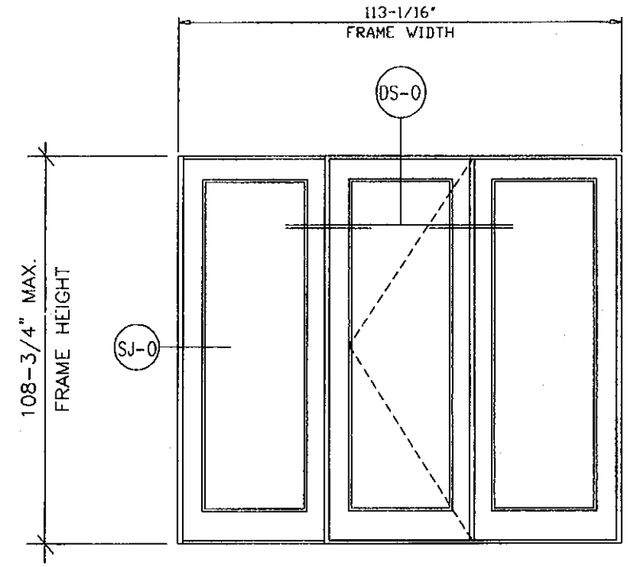

FRAME HEIGHT = PANEL HEIGHT + 1.750"
FRAME WIDTH = PANEL WIDTH + 2.750"

PRODUCT RENEWED
as complying with the Florida Building Code
Acceptance No. 11-0912.12
Expiration Date Nov 9, 2016
By Ishag I. Chanda
Miami Dade Product Control

PRODUCT REVISED
as complying with the Florida Building Code
Acceptance No 09-0723.04
Expiration Date Nov 09, 2011
By Ishag I. Chanda
Miami Dade Product Control Division

STEPS TO USE CHARTS/GRAPHS
SEE SHEETS 6 & 7.

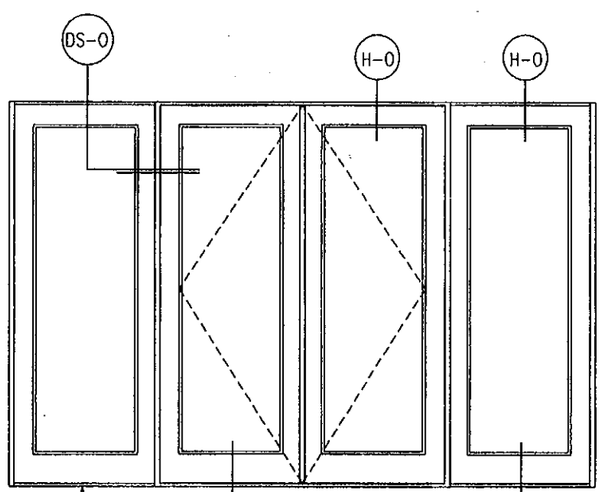

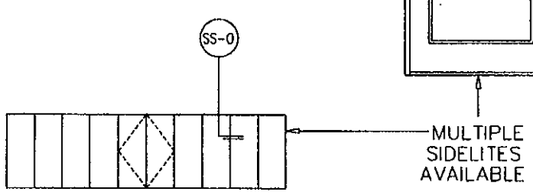

PANEL WIDTH	D.L. OPG. WIDTH
24"	12-7/8"
30"	18-7/8"
36"	24 7/8"
42"	30-7/8"

PANEL HEIGHT	D.L. OPG. HEIGHT
80"	66-1/2"
84"	70-1/2"
90"	76-1/2"
96"	82-1/2"
108"	94-1/2"

LEGEND

___ -0 – OUTSWING DOOR DETAIL

☐ – ITEM DESCRIPTION (see sheet 2 of 7)

revisions:

A	11.01.01	CHART REV. PER ASTM E-1300 & 1997 NDS
B	11.14.02	GLASS TYPES REV.
		INSUL. GLASS ADDED
C	08.05.03	NO CHANGE THIS SHEET
D	12.14.05	NO CHANGE THIS SHEET
E	10.16.06	REV. PER BCCO COMMENTS
F	07.10.09	UPDATED FOR 2007 FBC

W98-01

Engr: ARSHAD VIQAR
CIVIL
FLA. PE # 38863
C.A.N. 3538

JUL 1 4 2009

CGI
WINDOWS & DOORS
10100 northwest 25 street miami, florida 33172

product : Series 450 Outswing Doors & Sidelites

date : 10-20-97 | sheet 1 of 7

TYPICAL ELEVATIONS

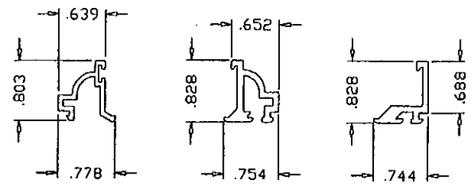

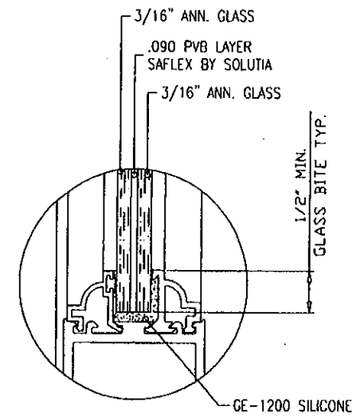

GLASS TYPE 13A

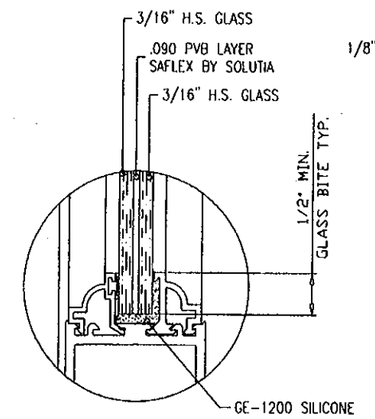

GLASS TYPE 13B

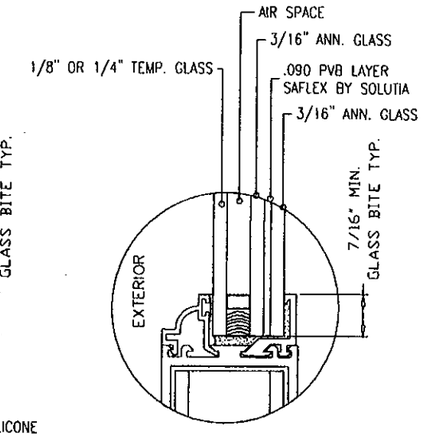

GLASS TYPE 13C

TYPICAL GLAZING DETAILS

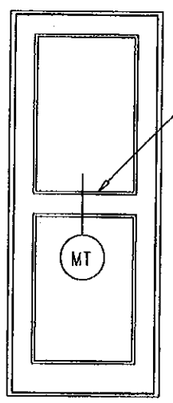

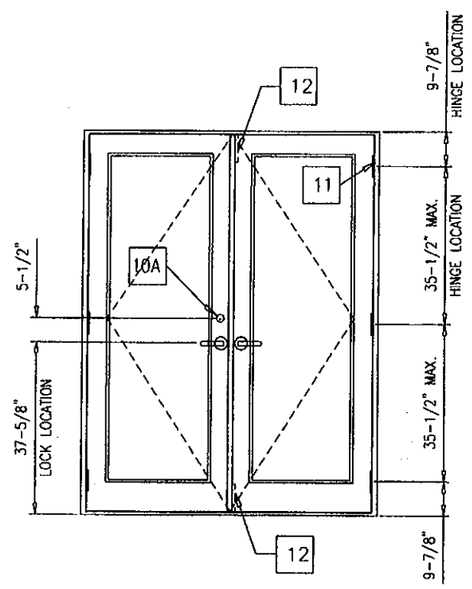

RESIDENTIAL HARDWARE

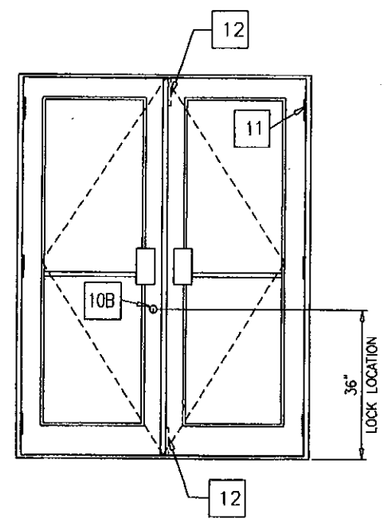

COMMERCIAL HARDWARE

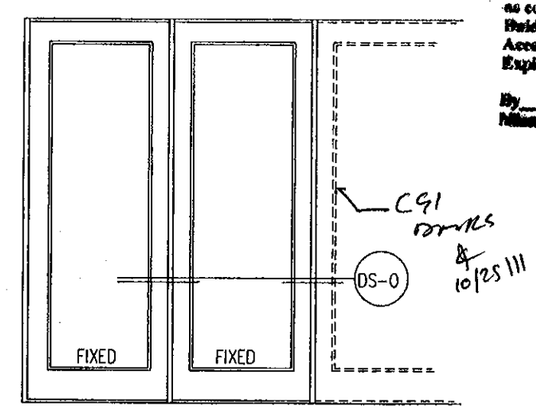

CGI Doors & 10/25/11

PRODUCT RENEWED as complying with the Florida Building Code
Acceptance No. 11-0912.12
Expiration Date Nov 9, 2016
By Ishag I. Chanda
Miami Dade Product Control

PRODUCT REVISED as complying with the Florida Building Code
Acceptance No. 09-0723.04
Expiration Date Nov 09, 2011
By Ishag I. Chanda
Miami Dade Product Control Division

LEGEND

___ -0 - OUTSWING DOOR DETAIL

☐ - ITEM DESCRIPTION (see sheet 2 of 7)

HINGE LOCATIONS		
MAX. DOOR HEIGHT	NO. REQD.	MAX. SPACING
UPTO 90-3/4"	3	35 1/2"
ABOVE 90-3/4"	4	30 1/2"

OPTIONAL TRUE MUNTINS
DOOR OR SIDELITE

HARDWARE DESCRIPTION

B	11.14.02	GLAZING DTL. REV.
C	08.05.03	GLAZING DTL. ADDED
D	12.14.05	NO CHANGE THIS SHEET
E	10.16.06	REV. PER BCCO COMMENTS
F	07.10.09	UPDATED FOR 2007 FBC

Engr: ARSHAD VIQAR
CIVIL
FLA. PE # 38863
C.A.N. 3538

JUL 1 4 2009

W98-01

CGI WINDOWS & DOORS
10100 northwest 25 street miami, florida 33172

product : Series 450 Outswing Doors & Sidelites

date : 10-20-97 | sheet 1.1 of 7

BILL OF MATERIALS

ITEM	DESCRIPTION
1	#12 X 1 1/4" HEX HEAD S/S SMS (3 PER CONNECTION)
2A	3/8-16 FULLY THREADED CONTINUOUS ROD
2B	3/8-16 HEX NUT
2C	1 1/2" X 1 1/2" X 3/16"THK. ALUMINUM PLATE
3	SHEAR CLIP (EXT. NO. 506)
4	DOUBLE 9/32" DIA. JAMB INSTLL. HOLES AT 6" FROM ENDS & 24 3/16" O.C. MAX.
5	9/32" DIA. HEAD & SILL INSTLL. HOLES AT 6" FROM ENDS, 3 @ CENTER OF PAIRS SPACED 6" O.C. & 24" O.C. MAX.
6	#10 X 1" PH-PH-SS TEKS SCREW, @ 3" & 7" FROM ENDS & 24" O.C. MAX.
7	#14 X 3/4" HEX HEAD S/S TEKS SCREW AT 6" FROM ENDS & 24 3/16" O.C. MAX.
8	.320 HIGH WOOL PILE WITH CENTER FIN (ULTRAFAB # 3032)
9	.350 HIGH FOAM-TITE WEATHERSEAL (AMESBURY # 32011)
10	THREE POINT LOCK AT ACTIVE LEAF
10A	CUSTOM CGI THREE POINT LOCK MECHANISM WHICH CONSISTS OF (1) TITAN KWIKSET SERIES 780 DEADBOLT (OR EQUAL) (2) DEADBOLT LATCH (TOP & BOTTOM) AND CUSTOM CGI INTERIOR LINKAGE MECHANISM
10B	REFLECTOLITE SERIES 6000 THREE POINT LOCK MECHANISM
11	HAGER 4 1/2" X 4" SOLID BRASS (OR S/S) HINGE SECURED WITH (8) #12-24 X 1/2" BRASS F.H. M.S. (3 PER PANEL UP TO 7'-6 3/4" HIGH) (4 PER PANEL OVER 7'-6 3/4" TO 9'-0 3/4" HIGH)
12	FLUSHBOLT AT TOP & BOTTOM OF INACTIVE LEAF (DELTA MODEL 5509) WITH REINFORCED TIP
13	
13A	1/2" NOMINAL (.466 ACTUAL) ANNEALED LAMINATED GLASS (2 PCS.) 3/16" THK. ANN. GLASS AND .090" SAFLEX INTERLAYER
13B	1/2" NOMINAL (.466 ACTUAL) HEAT STREN'D LAMINATED GLASS (2 PCS.) 3/16" THK. H.S. GLASS AND .090" SAFLEX INTERLAYER
13C	1" NOMINAL (.966 ACTUAL) INSUL. ANN. LAMINATED GLASS 1/8" TEMP. GLASS (OUTBOARD), 3/8" AIR SPACE AND (2 PCS.) 3/16" THK. ANN. GLASS AND .090" SAFLEX INTERLAYER OR 1" NOMINAL (.966 ACTUAL) INSUL. ANN. LAMINATED GLASS 1/4" TEMP. GLASS (OUTBOARD), 1/4" AIR SPACE AND (2 PCS.) 3/16" THK. ANN. GLASS AND .090" SAFLEX INTERLAYER
14	GE-1200 SILICONE
15	3/4" X 1 1/4" X 3/4" X 1/8"THK. CONTINUOUS ALUMINUM CHANNEL SECURED WITH INSTALLATION SCREWS (SEE ITEM 5)
16	1/2" THK. (nom) CUSTOM ALUMINUM PANEL CONSISTING OF (2) .090 THK. ALUM. SHEETS & (1) 1/4" PLYWOOD AT CENTER
17	1/2" X 1/2" CONTINUOUS CLOSED CELL FOAM TAPE WITH ONE SIDE ADHESIVE
18	PLASTIC WEEP BAFFLE
19	7/8" X 5" X 1/8" THK. CONTINUOUS ALUMINUM SILL ANGLE ADAPTOR

EXT. = EXTRUSION LIST 500, 501, 502, 506, 507, 508, 509, 510 & 511
ALL EXTRUSIONS ARE 6063-T6.

PRODUCT RENEWED
as complying with the Florida Building Code
Acceptance No. 11-0912.12
Expiration Date NOV.09, 2016
By Ishaq I. Chanda
Miami Dade Product Control

PRODUCT REVISED
as complying with the Florida Building Code
Acceptance No. 09-0723.04
Expiration Date NOV.09, 2011
By Ishaq I. Chanda
Miami Dade Product Control Division

B	11.14.02	GLASS TYPES REV. INSUL. GLASS ADDED
C	08.05.03	NO CHANGE THIS SHEET
D	12.14.05	NO CHANGE THIS SHEET
E	10.16.06	REV. PER BCCO COMMENTS
F	07.10.09	UPDATED FOR 2007 FBC

Engr: ARSHAD VIQAR
CIVIL
FLA. PE # 38863
C.A.N. 3538

JUL 1 4 2009

W98-01

CGI
WINDOWS & DOORS
10100 northwest 25 street miami, florida 33172

product : Series 450 Outswing Doors & Sidelites

date : 10-20-97 | sheet 2 of 7

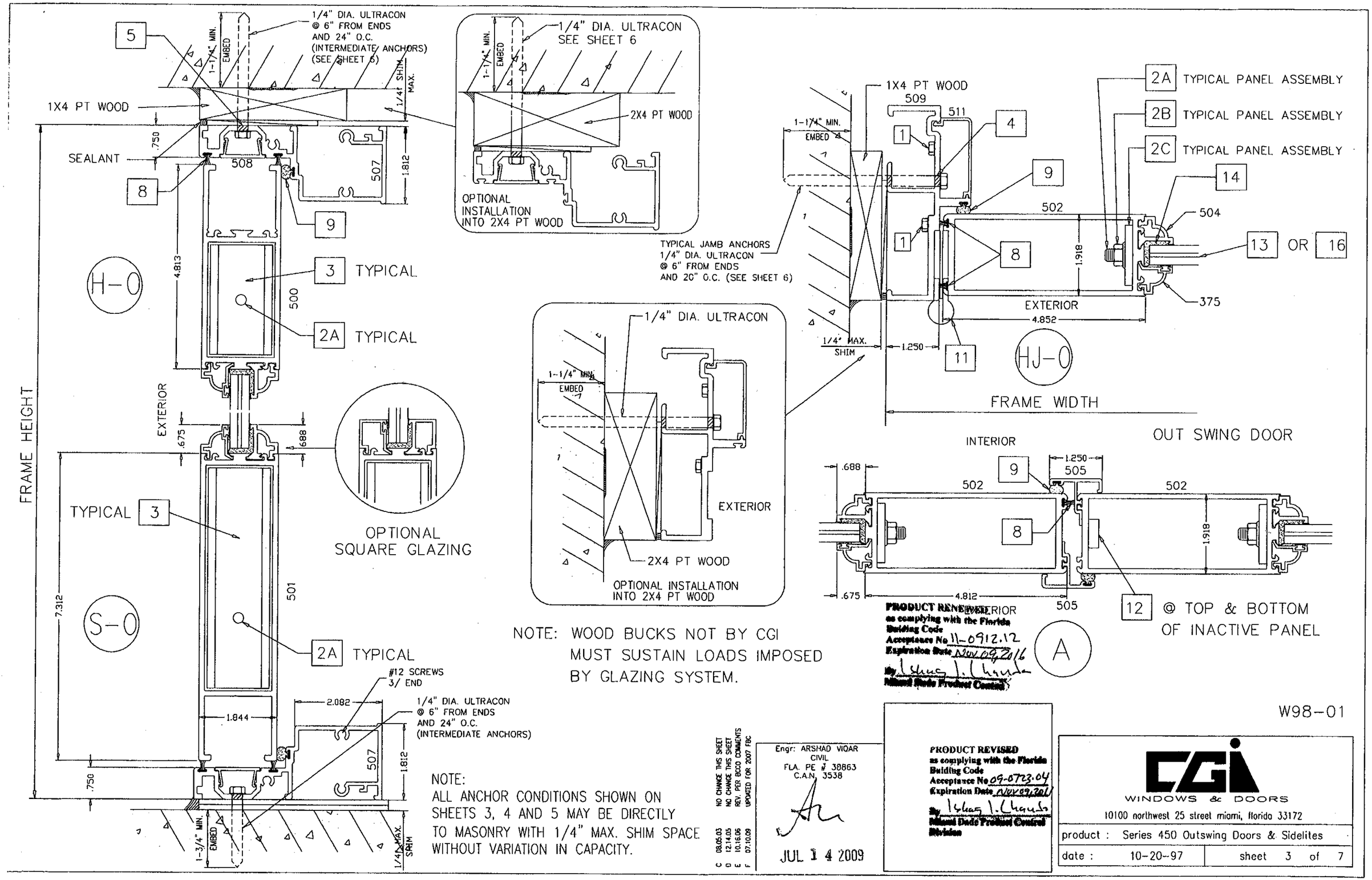

NOTE: WOOD BUCKS NOT BY CGI MUST SUSTAIN LOADS IMPOSED BY GLAZING SYSTEM.

NOTE:
ALL ANCHOR CONDITIONS SHOWN ON SHEETS 3, 4 AND 5 MAY BE DIRECTLY TO MASONRY WITH 1/4" MAX. SHIM SPACE WITHOUT VARIATION IN CAPACITY.

PRODUCT RENEWED as complying with the Florida Building Code
Acceptance No 11-0912.12
Expiration Date Nov 09, 2016
By Ishag I. Chauda
Miami Dade Product Control

W98-01

C 08.05.03	NO CHANGE THIS SHEET
D 12.14.05	NO CHANGE THIS SHEET
E 10.16.06	REV. PER BCCO COMMENTS
F 07.10.09	UPDATED FOR 2007 FBC

Engr: ARSHAD VIQAR
CIVIL
FLA. PE # 38863
C.A.N. 3538

JUL 14 2009

PRODUCT REVISED as complying with the Florida Building Code
Acceptance No 09-0723.04
Expiration Date Nov 09, 2011
By Ishag I. Chauda
Miami Dade Product Control Division

CGI WINDOWS & DOORS
10100 northwest 25 street miami, florida 33172

product :	Series 450 Outswing Doors & Sidelites
date : 10-20-97	sheet 3 of 7

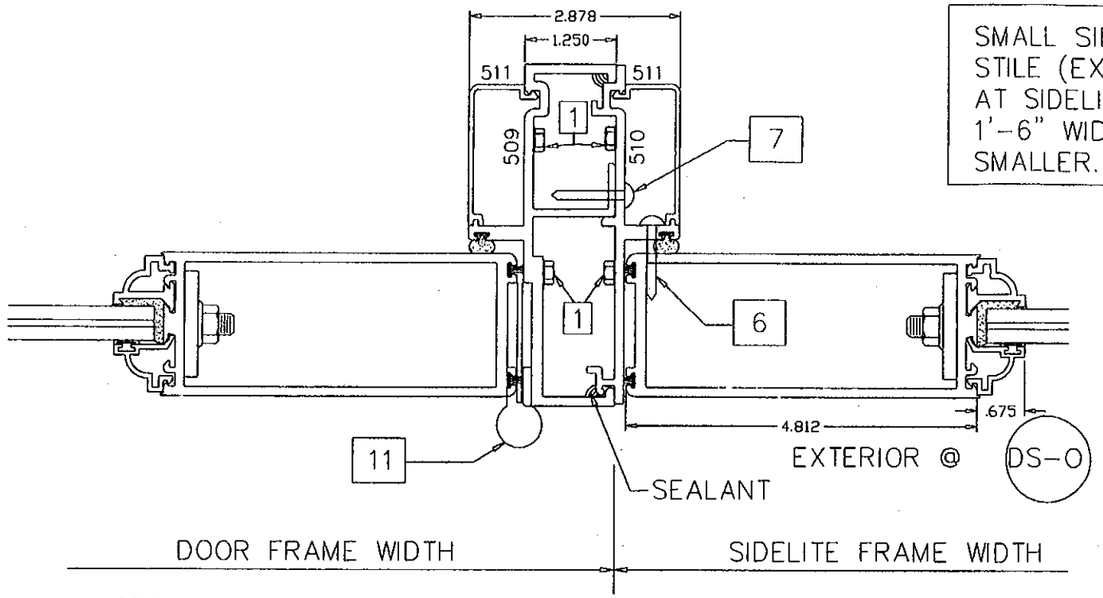

SMALL SIDELITE STILE (EXT. 503) AT SIDELITES 1'-6" WIDE OR SMALLER.

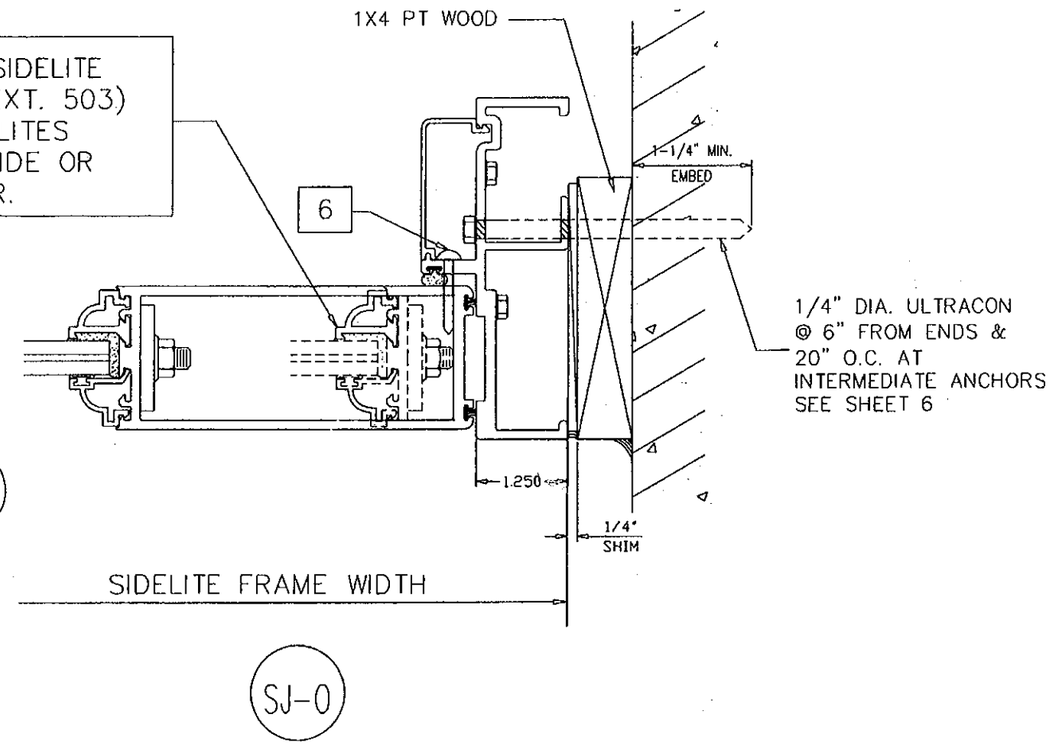

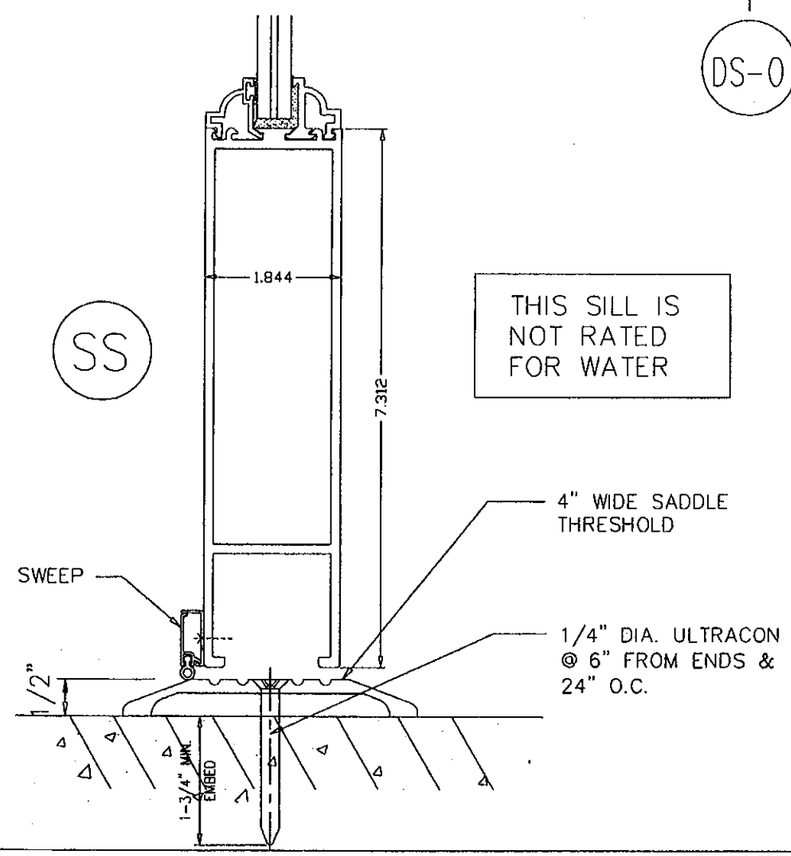

THIS SILL IS NOT RATED FOR WATER

REFER TO SHEET 2 OF 7 FOR TYPICAL BILL OF MATERIALS

B	11.14.02	GLASS TYPES REV. INSUL. GLASS ADDED
C	08.05.03	NO CHANGE THIS SHEET
D	12.14.05	NO CHANGE THIS SHEET
E	10.16.06	REV. PER BCCO COMMENTS
F	07.10.09	UPDATED FOR 2007 FBC

Engr: ARSHAD VIQAR
CIVIL
FLA. PE # 38863
C.A.N. 3538

JUL 1 4 2009

PRODUCT REVISED
as complying with the Florida Building Code
Acceptance No. 09-0723.04
Expiration Date NOV 09, 2011
By Ishaq I. Chaudhry
Miami-Dade Product Control Division

PRODUCT RENEWED
as complying with the Florida Building Code
Acceptance No. 11-0912.12
Expiration Date NOV 09, 2016
By Ishaq I. Chaudhry
Miami-Dade Product Control

W98-01

CGI WINDOWS & DOORS
10100 northwest 25 street miami, florida 33172

product :	Series 450 Outswing Doors & Sidelites		
date :	10-20-97	sheet	4 of 7

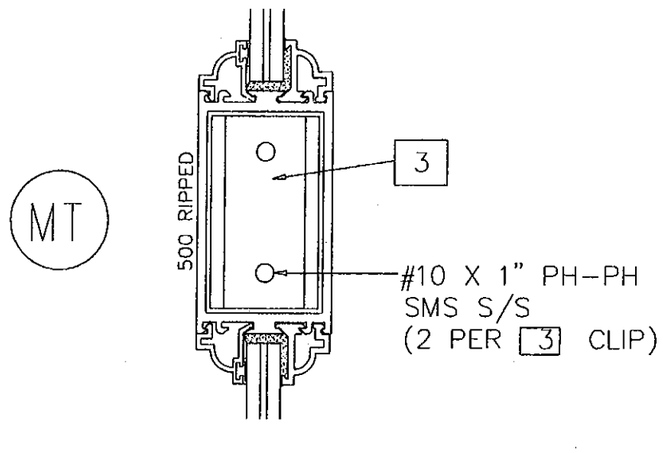

MULLION

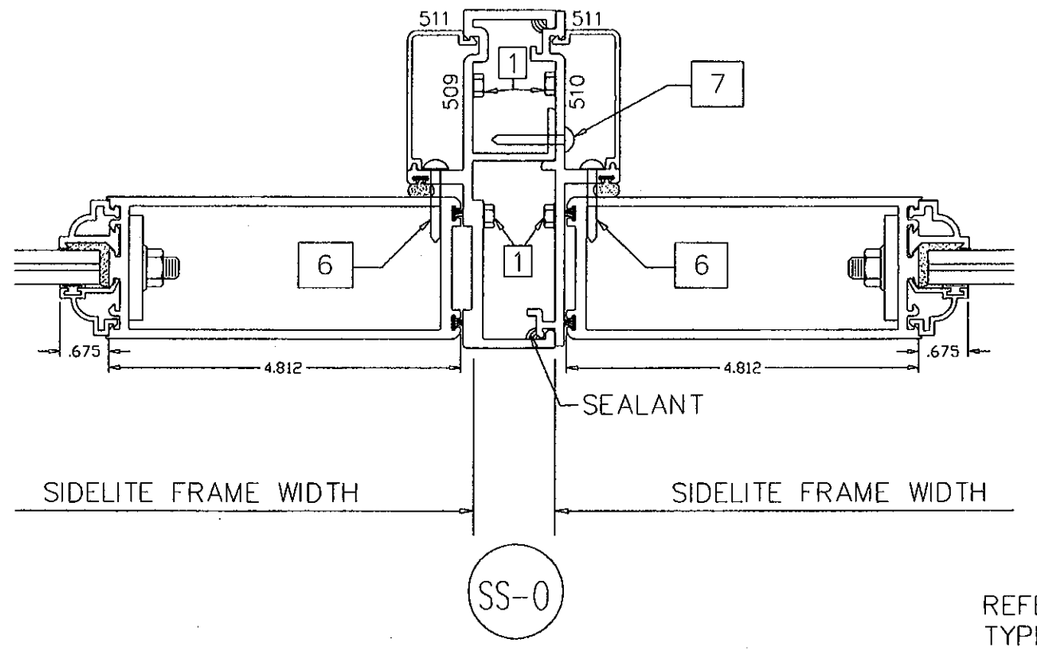

REFER TO SHEET 2 OF 7 FOR TYPICAL BILL OF MATERIALS

PRODUCT RENEWED
as complying with the Florida Building Code
Acceptance No 11-0912.12
Expiration Date NOV 09, 2016
By Ishaq I. Chand
Miami-Dade Product Control

W98-01

C	08.05.03	NO CHANGE THIS SHEET
D	12.14.05	NO CHANGE THIS SHEET
E	10.16.06	REV. PER BCCO COMMENTS
F	07.10.09	UPDATED FOR 2007 FBC

Engr: ARSHAD VIQAR
CIVIL
FLA. PE # 38863
C.A.N. 3538

JUL 1 4 2009

PRODUCT REVISED
as complying with the Florida Building Code
Acceptance No 09-0723.04
Expiration Date NOV 09, 2011
By Ishaq I. Chand
Miami-Dade Product Control Division

CGI
WINDOWS & DOORS
10100 northwest 25 street miami, florida 33172

product :	Series 450 Outswing Doors & Sidelites		
date :	10-20-97	sheet	5 of 7

PANEL PERFORMANCE CHART FOR DOORS, SINGLE SIDELITES AND MULLIONS LAMINATED GLASS

NOMINAL DIMS.		OUT-SWING DESIGN LOAD CAPACTY-PSF				MULLION LOAD CAPACITY PSF
		ANN. LAM. GLASS (TYPE 13A)		H.S. LAM. GLASS (TYPE 13B)		
PANEL WIDTH	PANEL HEIGHT	EXT.	INT.	EXT.	INT.	
2/0	6/8	100.0	100.0	100.0	110.0	110.0
2/6		100.0	100.0	100.0	110.0	110.0
3/0		100.0	100.0	100.0	110.0	110.0
3/6		87.1	87.1	100.0	110.0	110.0
2/0	7/0	100.0	100.0	100.0	110.0	110.0
2/6		100.0	100.0	100.0	110.0	110.0
3/0		100.0	100.0	100.0	110.0	110.0
3/6		82.6	82.6	100.0	110.0	110.0
2/0	7/6	100.0	100.0	100.0	110.0	110.0
2/6		100.0	100.0	100.0	110.0	110.0
3/0		100.0	100.0	100.0	110.0	110.0
3/6		76.8	76.8	100.0	102.9	110.0
2/0	8/0	100.0	100.0	100.0	110.0	110.0
2/6		100.0	100.0	100.0	110.0	110.0
3/0		100.0	100.0	100.0	110.0	110.0
2/0	9/0	100.0	100.0	100.0	110.0	110.0
2/6		100.0	100.0	100.0	110.0	96.6
3/0		100.0	100.0	100.0	100.0	80.5

LOADS SHOWN ABOVE ARE FOR DOORS USING THRESHOLD (S-S) WHERE WATER INFILTRATION REQUIREMENTS ARE NOT APPLICABLE AND FOR THRESHOLD (S-0) IN ANY CONDITION.

PANEL PERFORMANCE CHART FOR DOORS, SINGLE SIDELITES AND MULLIONS INSULATED LAMINATED GLASS

NOMINAL DIMS.		OUT-SWING DESIGN LOAD CAPACTY-PSF	
		INSUL. ANN. LAM. GLASS (TYPE 13C)	
PANEL WIDTH	PANEL HEIGHT	EXT.	INT.
2/0	6/8	80.0	80.0
2/6		80.0	80.0
3/0		80.0	80.0
3/6		80.0	80.0
2/0	7/0	80.0	80.0
2/6		80.0	80.0
3/0		80.0	80.0
2/0	7/6	80.0	80.0
2/6		80.0	80.0
3/0		80.0	80.0
2/0	8/0	80.0	80.0
2/6		80.0	80.0
3/0		80.0	80.0

LOADS SHOWN ABOVE ARE FOR DOORS USING THRESHOLD (S-S) WHERE WATER INFILTRATION REQUIREMENTS ARE NOT APPLICABLE AND FOR THRESHOLD (S-0) IN ANY CONDITION.

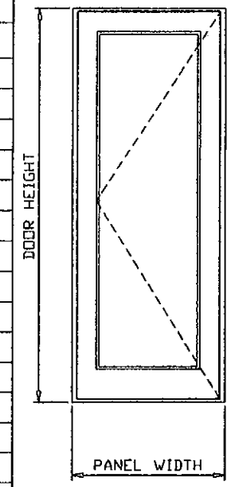

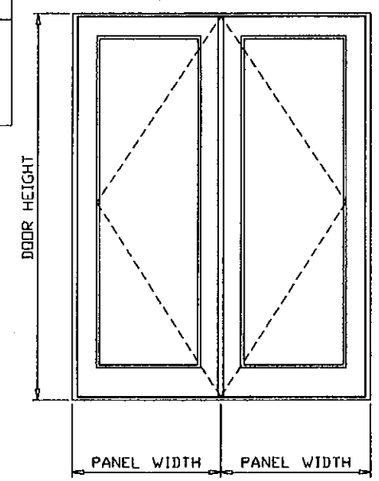

NOTE:
GLASS CAPACITIES ON THIS SHEET ARE BASED ON ASTM E1300-02 (3 SEC. GUSTS)

PRODUCT RENEWED
as complying with the Florida Building Code
Acceptance No. 11-0912.12
Expiration Date NOV 09, 2016
By [signature]
Miami Dade Product Control

PRODUCT REVISED
as complying with the Florida Building Code
Acceptance No. 09-0723.04
Expiration Date NOV 09, 2011
By [signature]
Miami Dade Product Control Division

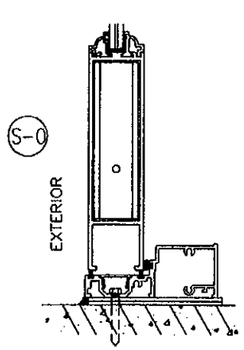

OUTSWING

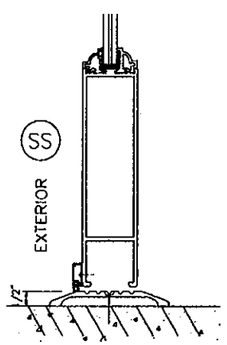

OUTSWING (SADDLE)

THESE CHARTS CAN BE USED TO CHECK CAPACITY FOR SINGLE OR DOUBLE LEAF DOORS.

REFER TO TABLES ON SHEET 7 TO DETERMINE ANCHORS REQUIRED.

STEPS TO USE CHARTS:

1. DETERMINE WIND LOAD BASED ON PROVISIONS OF 2007 FLORIDA BLDG. CODE.
2. DETERMINE WATER INFILTRATION REQUIREMENTS BASED ON PROVISIONS OF FBC.
3. SELECT A DOOR SYSTEM ~~I.E. INSWING,~~ OUTSWING AND TYPE OF THRESHOLD.
4. CHECK THE ALLOWABLE EXTERIOR AND INTERIOR LOADS FROM APPROPRIATE CHART. THE ALLOWABLE LOADS MUST MEET OR EXCEED THE DESIGN LOADS REQUIREMENTS.
5. SELECT AND CHECK ANCHORS TO MEET LOAD.
6. FOR MULLED SIDELITE REFER TO MULLION CAPACITY.

Engr: ARSHAD VIQAR
CIVIL
FLA. PE # 38863
C.A.N. 3538

JUL 1 4 2009

AL-FAROOQ CORPORATION
ENGINEERS & PRODUCT DEVELOPMENT
1235 S.W. 87 AVE
MIAMI, FLORIDA 33174
TEL. (305) 264-6100 FAX. (305) 262-6978

COMP-ANL\W98-01CG

SERIES 450 OUTSWING DOOR AND SIDELITE

CGI WINDOWS & DOORS
10100 N.W. 25TH STREET
MIAMI, FL. 33172
TEL. (305) 593-6590 FAX. (305) 593-6592

revisions:

no	date	by	description
B	11.14.02		GLASS TYPES REV.
C	08.05.03		NO CHANGE THIS SHEET
D	12.14.05		NOTE ADDED
E	10.16.06		REV. PER BCCO COMMENTS
F	07.10.09		UPDATED FOR 2007 FBC

date: 01-02-98
scale: 1/2" = 1"
dr. by: HAMID
chk. by:

drawing no.
W98-01

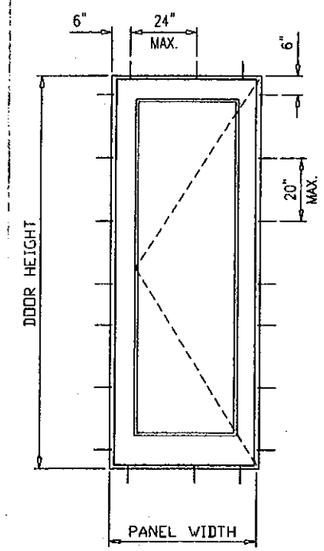

SINGLE DOOR OR SIDELITE

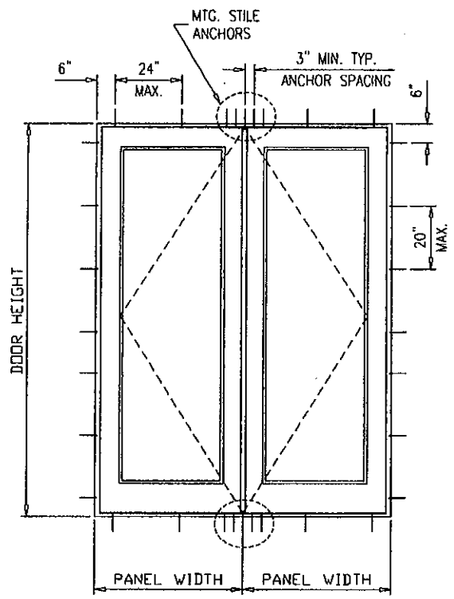

DOUBLE DOOR

MULLION ANCHORS AT SIDELITES						
NOMINAL DIMS		DESIGN LOAD CAPACTY-PSF				
		TYPE 'B'			TYPE 'C'	
PANEL WIDTH	PANEL HEIGHT	CLUSTER OF 2 ANCHORS	CLUSTER OF 4 ANCHORS	CLUSTER OF 6 ANCHORS	CLUSTER OF 2 ANCHORS	CLUSTER OF 4 ANCHORS
2/0	6/8	88.2	110.0	110.0	110.0	110.0
2/6		70.6	110.0	110.0	100.3	110.0
3/0		58.8	110.0	110.0	83.6	110.0
3/6		50.4	100.8	110.0	71.7	110.0
2/0	7/0	84.0	110.0	110.0	110.0	110.0
2/6		67.2	110.0	110.0	95.5	110.0
3/0		56.0	110.0	110.0	79.6	110.0
3/6		48.0	96.0	110.0	68.2	110.0
2/0	7/6	78.4	110.0	110.0	110.0	110.0
2/6		62.7	110.0	110.0	89.2	110.0
3/0		52.3	104.5	110.0	74.3	110.0
3/6		44.8	89.6	110.0	63.7	110.0
2/0	8/0	73.5	110.0	110.0	104.5	110.0
2/6		58.8	110.0	110.0	83.6	110.0
3/0		49.0	98.0	110.0	69.7	110.0
2/0	9/0	65.3	110.0	110.0	92.9	110.0
2/6		52.3	104.5	110.0	74.3	110.0
3/0		43.6	87.1	110.0	61.9	110.0

MTG. STILE ANCHORS AT DOUBLE DOORS						
NOMINAL DIMS		DESIGN LOAD CAPACTY-PSF				
		TYPE 'B'			TYPE 'C'	
PANEL WIDTH	PANEL HEIGHT	CLUSTER OF 2 ANCHORS	CLUSTER OF 4 ANCHORS	CLUSTER OF 5 ANCHORS	CLUSTER OF 2 ANCHORS	CLUSTER OF 4 ANCHORS
2/0	6/8	88.2	110.0	110.0	110.0	110.0
2/6		70.6	110.0	110.0	100.3	110.0
3/0		58.8	110.0	110.0	83.6	110.0
3/6		50.4	100.8	110.0	71.7	110.0
2/0	7/0	84.0	110.0	110.0	110.0	110.0
2/6		67.2	110.0	110.0	95.5	110.0
3/0		56.0	110.0	110.0	79.6	110.0
3/6		48.0	96.0	110.0	68.2	110.0
2/0	7/6	78.4	110.0	110.0	110.0	110.0
2/6		62.7	110.0	110.0	89.2	110.0
3/0		52.3	104.5	110.0	74.3	110.0
3/6		44.8	89.6	110.0	63.7	110.0
2/0	8/0	73.5	110.0	110.0	104.5	110.0
2/6		58.8	110.0	110.0	83.6	110.0
3/0		49.0	98.0	110.0	69.7	110.0
2/0	9/0	65.3	110.0	110.0	92.9	110.0
2/6		52.3	104.5	110.0	74.3	110.0
3/0		43.6	87.1	108.9	61.9	110.0

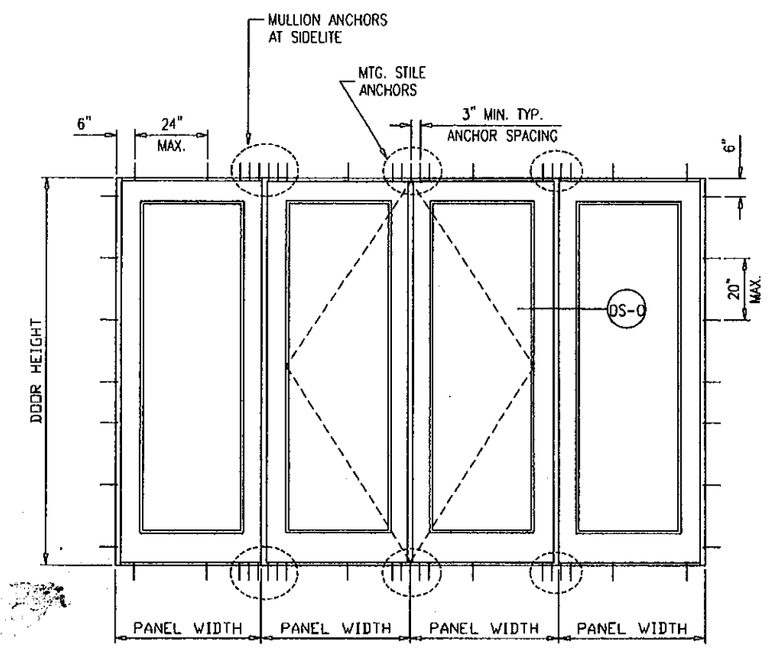

FOR SIDELITE AVG. PANEL WIDTH = $\frac{\text{DOOR PANEL + FIXED PANEL}}{2}$

PRODUCT RENEWED
as complying with the Florida Building Code
Acceptance No. 11-0912.12
Expiration Date Nov 09, 2016
By Ishaq I. Chanda
Miami-Dade Product Control

PRODUCT REVISED
as complying with the Florida Building Code
Acceptance No. 09-0723.04
Expiration Date Nov 09, 2011
By Ishaq I. Chanda
Miami Dade Product Control Division

ANCHORS:

TYPE 'B'– 1/4" DIA. ULTRACON BY 'ELCO' (Fu=177 KSI, Fy=155 KSI)

INTO WOOD STRUCTURES
1–3/8" MIN. PENETRATION INTO WOOD

THRU WOOD BUCKS INTO CONC. OR MASONRY
1–1/4" MIN. EMBED INTO CONC. OR MASONRY

DIRECTLY INTO CONC. OR MASONRY
1–1/4" MIN. EMBED INTO CONC. OR MASONRY

EDGE DISTANCES

INTO CONCRETE AND MASONRY = 2" MIN.
INTO WOOD STRUCTURE = 1" MIN.

TYPE 'C'– 1/4" DIA. ULTRACON BY 'ELCO' (Fu=177 KSI, Fy=155 KSI)

DIRECTLY INTO CONC. AT SILL
1–3/4" MIN. EMBED INTO CONC.

EDGE DISTANCES

INTO CONCRETE = 2–1/2" MIN.

CONCRETE f'c = 3000 PSI MIN.
C–90 HOLLOW/FILLED BLOCK f'm = 2000 PSI MIN.

STEPS TO USE CHARTS:

1. SELECT TYPE OF ANCHOR.
2. FOR SIZE OF UNITS DETERMINE ALLOWABLE LOAD CAPACITY. THIS LOAD CAPACITY MUST MEET OR EXCEED DESIGN WIND LOAD REQUIREMENT DETERMINE IN STEP 1 OF SHEET 6.

Engr: ARSHAD VIQAR
CIVIL
FLA. PE # 38863
C.A.N. 3538

JUL 1 4 2009

AL-FAROOQ CORPORATION
ENGINEERS & PRODUCT DEVELOPMENT
1235 S.W. 67 AVE
MIAMI, FLORIDA 33144
TEL. (305) 264-8100 FAX. (305) 262-6978
COMP-ANL\W98-01CG

SERIES 450 OUTSWING DOOR AND SIDELITE

CGI WINDOWS & DOORS
10100 N.W. 25TH STREET
MIAMI, FL. 33172
TEL. (305) 593-6590 FAX. (305) 593-6592

revisions:

no	date	by	description
A	11.01.01		CHARTS REV. PER 1997 NDS
C	08.05.03		NO CHANGE THIS SHEET
D	12.14.05		CHART REV.
E	10.16.06		REV. PER BCCO COMMENTS
F	07.10.09		UPDATED FOR 2007 FBC

date: 01-02-98
scale: 1/2" = 1"
dr. by: HAMID
chk. by:

drawing no.
W98-01

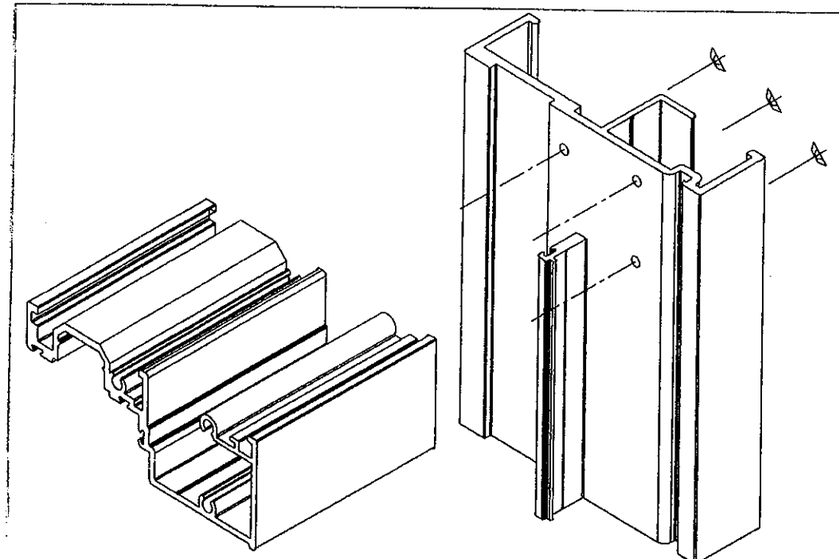

HEAD CORNER DETAIL

CORNERS TO BE SEALED WITH
LOW MODULUS SILICONE SILPRUF
OR EQUIVALENT.

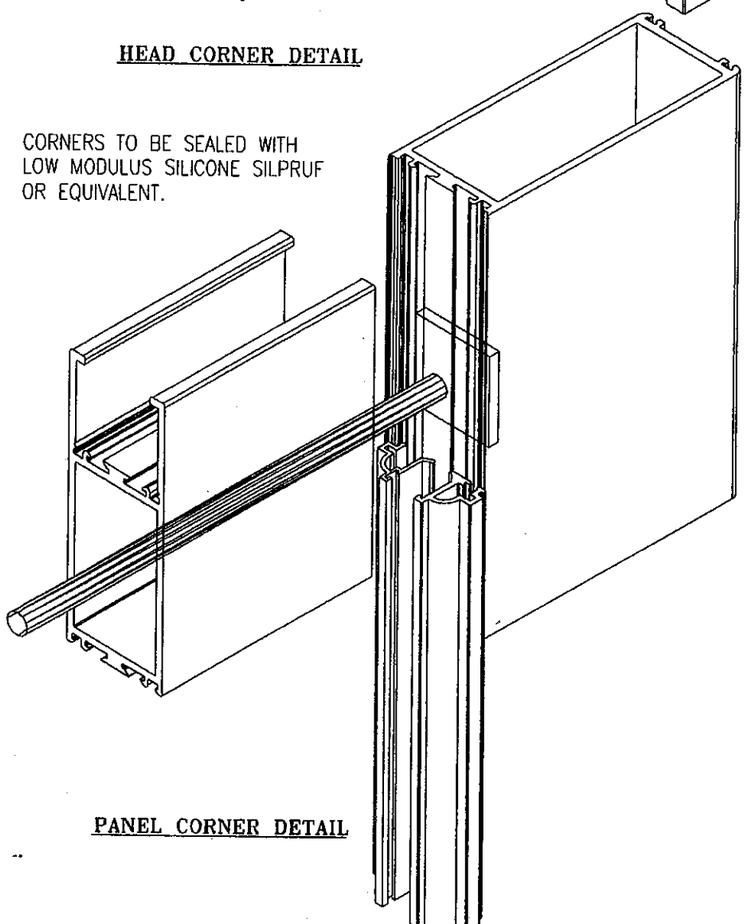

PANEL CORNER DETAIL

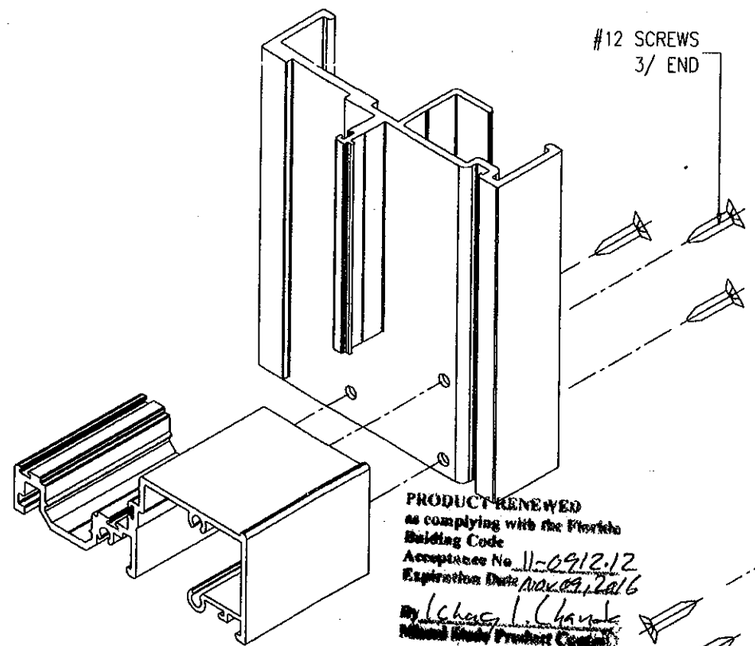

SILL CORNER DETAIL

PRODUCT RENEWED
as complying with the Florida
Building Code
Acceptance No 11-0912.12
Expiration Date NOV.09,2016
By Ishwar V. Chandra
Miami Dade Product Control

PRODUCT REVISED
as complying with the Florida
Building Code
Acceptance No 09-0722.04
Expiration Date NOV.09,2011
By Ishwar V. Chandra
Miami Dade Product Control
Division

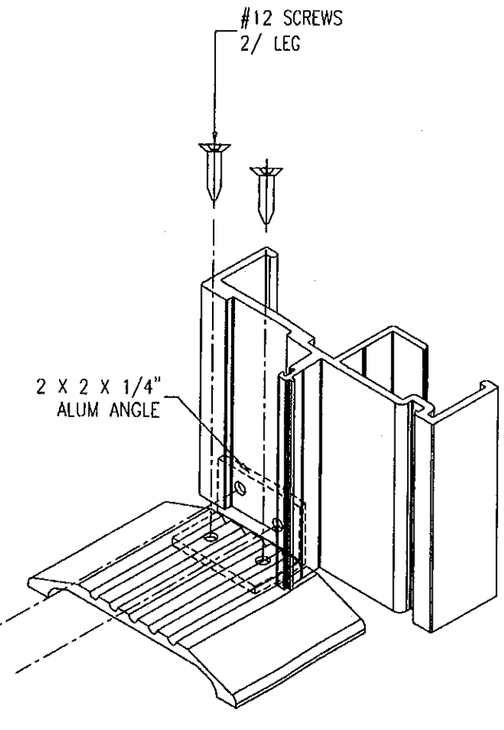

SILL CORNER DETAIL

Engr: ARSHAD VIQAR
CIVIL
FLA. PE # 38863
C.A.N. 3538

JUL 1 4 2009

AL-FAROOQ CORPORATION
ENGINEERS & PRODUCT DEVELOPMENT
1235 S.W. 87 AVE
MIAMI, FLORIDA 33174
TEL. (305) 264-8100 FAX. (305) 262-8978

COMP-ANL\W98-01CG

SERIES 450 OUTSWING DOOR AND SIDELITE

CGI WINDOWS & DOORS
10100 N.W. 25TH STREET
MIAMI, FL. 33172
TEL. (305) 593-6590 FAX. (305) 593-6592

revisions:

no	date	by	description
A	11.01.01		CHANGS REV. PER 1997 NDS
C	06.05.03		NO CHANGE THIS SHEET
D	12.14.05		CHART REV.
E	10.16.06		REV. PER BCCO COMMENTS
F	07.10.09		UPDATED FOR 2007 FBC

date: 01-02-98
scale: 1/2" = 1"
dr. by: HAMID
chk. by:

drawing no.
W98-01

sheet 7.1of 7