MIAMI-DADE COUNTY
DEPARTMENT OF PERMITTING, ENVIRONMENT, AND REGULATORY AFFAIRS (PERA)
BOARD AND CODE ADMINISTRATION DIVISION

NOTICE OF ACCEPTANCE (NOA)

MIAMI-DADE COUNTY
PRODUCT CONTROL SECTION
11805 SW 26 Street, Room 208
Miami, Florida 33175-2474
T (786) 315-2590 F (786) 315-2599
www.miamidade.gov/pera/

PGT Industries
1070 Technology Drive,
Nokomis, Fl. 34275

SCOPE:

This NOA is being issued under the applicable rules and regulations governing the use of construction materials. The documentation submitted has been reviewed and accepted by Miami-Dade County PERA -Product Control Section to be used in Miami Dade County and other areas where allowed by the Authority Having Jurisdiction (AHJ).

This NOA shall not be valid after the expiration date stated below. The Miami-Dade County Product Control Section (In Miami Dade County) and/or the AHJ (in areas other than Miami Dade County) reserve the right to have this product or material tested for quality assurance purposes. If this product or material fails to perform in the accepted manner, the manufacturer will incur the expense of such testing and the AHJ may immediately revoke, modify, or suspend the use of such product or material within their jurisdiction. PERA reserves the right to revoke this acceptance, if it is determined by Miami-Dade County Product Control Section that this product or material fails to meet the requirements of the applicable building code.

This product is approved as described herein, and has been designed to comply with the Florida Building Code, including the High Velocity Hurricane Zone.

DESCRIPTION: Series "FD-101" Outswing Aluminum French Door w/wo Sidelites

APPROVAL DOCUMENT: Drawing No.**11005-1 Rev C**, titled "Alum French door & Sidelites", sheets 1through 10 of 10, prepared by manufacturer, dated 02/22/07 and last revised on 10/11/11, signed and sealed by Lynn Miller, P.E., bearing the Miami-Dade County Product Control Revision stamp with the Notice of Acceptance number and expiration date by the Miami-Dade County Product Control Section.

MISSILE IMPACT RATING: Large and Small Missile Impact Resistant

Limitations:

1. Use of Table 1, require full length reinforcements (item #22) for OX, XO, XXO, OXX, OXO and OXXO. The lower design pressure from X, XX doors or O (sidelite) shall control.
2. Egress operable doors must comply with min clear width per FBC, as applicable.
3. All laminated glazing options (glass types A, B, C & D) must be with interior 3/16" HS glass.

LABELING: Each unit shall bear a permanent label with the manufacturer's name or logo, city, state and series and following statement: "Miami-Dade County Product Control Approved", unless otherwise noted herein.

RENEWAL of this NOA shall be considered after a renewal application has been filed and there has been no change in the applicable building code negatively affecting the performance of this product.

TERMINATION of this NOA will occur after the expiration date or if there has been a revision or change in the materials, use, and/or manufacture of the product or process. Misuse of this NOA as an endorsement of any product, for sales, advertising or any other purposes shall automatically terminate this NOA. Failure to comply with any section of this NOA shall be cause for termination and removal of NOA.

ADVERTISEMENT: The NOA number preceded by the words Miami-Dade County, Florida, and followed by the expiration date may be displayed in advertising literature. If any portion of the NOA is displayed, then it shall be done in its entirety.

INSPECTION: A copy of this entire NOA shall be provided to the user by the manufacturer or its distributors and shall be available for inspection at the job site at the request of the Building Official.

This NOA **revises NOA # 07-0629.10** and consists of this page 1 and evidence pages E-1, as well as approval document mentioned above.

The submitted documentation was reviewed by **Ishaq I. Chanda, P.E.**

MIAMI-DADE COUNTY APPROVED

11/15/11

NOTICE OF ACCEPTANCE: EVIDENCE SUBMITTED

A. DRAWINGS

1. Manufacturer's die drawings and sections (transferred from file **# 07-0629.10**).
2. Drawing No.**11005-1 Rev C**, titled "Alum French door & Sidelites", sheets 1through 10 of 10, prepared by manufacturer, dated 02/22/07 and last revised on 10/11/11, signed and sealed by Lynn Miller, P.E.

B. TESTS (transferred from file **# 07-0629.10**)

Test report on 1) Air Infiltration Test, per FBC, TAS 202-94
2) Uniform Static Air Pressure Test, per FBC, TAS 202-94
3) Water Resistance Test, per FBC, TAS 202-94.
4) Large Missile Impact Test per FBC, TAS 201-94
5) Cyclic Wind Pressure Loading per FBC, TAS 203-94
6) Forced Entry Test, per FBC 2411.3.2.1 (b) and TAS 202-94

Along with marked-up drawings and installation diagram of aluminum out swinging French door w/ sidelites, prepared by Fenestration Testing Laboratory, Inc., Test Report No **FTL-5212**, dated May 05, 2007, signed and sealed by Carlos S. Rionda, P.E.

C. CALCULATIONS

1. Statement letter dated OCT 11, 2011 of compliance to FBC 2007 & FBC 2010, prepared by PGT, signed & sealed by Lynn Miller, P.E.
2. Statement letter dated 10/07/11, Successor Engineer adopting the another engineer's work per FAR 61G15-27-001, signed & sealed by Lynn Miller, P.E.
3. Anchor verification and comparative analysis dated 06-21-07 and last revised on 09/25/07, prepared by PGT, signed and sealed by Robert L. Clark, P.E. (transferred from file **# 07-0629.10**)
3. Glazing complies with ASTME-1300-02 &-04

D. QUALITY ASSURANCE

1. Miami Dade Department of Permitting, Environment, and Regulatory Affairs (PERA).

E. MATERIAL CERTIFICATIONS

1. Notice of Acceptance No. **11-0325.05** issued to Solutia Inc, for "Saflex (clear & color) Interlayer", expiring on 05/21/16.
3. Notice of Acceptance No. **11-0624.01** issued to "E.I. DuPont Denemours" for "DuPont Butacite ® PVB", expiring on 12/11/16.

F. STATEMENTS

1. Statement letter dated OCT 11, 2011 of compliance to FBC 2007 & FBC 2010 and "No financial interest", prepared by PGT, signed & sealed by Lynn Miller, P.E.
2. Statement letter of conformance and no financial interest, dated 03-02-07, signed by Robert L. Clark, P.E. (transferred from file **# 07-0629.10**)
3. Letter of lab compliance, part of the above test reports.

G. OTHER

1. This NOA **revises # 07-0629.10**, expiring October 18, 2012.
2. Test proposal dated Jan. 18, 2007 approved by BCCO.

Ishaq I. Chanda

Ishaq I. Chanda, P.E.
Product Control Examiner
NOA No 11-1013.22
Expiration Date: October 18, 2012
Approval Date: November 23, 2011

NOTES: OUTSWING IMPACT FRENCH DOOR(S) AND SIDE LITE(S)

1. GLAZING OPTIONS:
   A. 3/8" LAMI NOM. (.402") CONSISTING OF (1) LITE OF 1/8" ANNEALED GLASS PLUS AN .090 PVB INTERLAYER OF DUPONT BUTACITE OR SAFLEX/KEEPSAFE MAXIMUM PLUS (1) LITE OF 3/16" HEAT STRENGTHENED GLASS.
   B. 3/8" LAMI NOM. (.402") CONSISTING OF (1) LITE OF 1/8" HEAT STRENGTHENED GLASS PLUS AN .090 PVB INTERLAYER OF DUPONT BUTACITE OR SAFLEX/KEEPSAFE MAXIMUM PLUS (1) LITE OF 3/16" HEAT STRENGTHENED GLASS.
   C. 7/16" LAMI NOM. (.465") CONSISTING OF (1) LITE OF 3/16" ANNEALED GLASS PLUS AN .090 PVB INTERLAYER OF DUPONT BUTACITE OR SAFLEX/KEEPSAFE MAXIMUM PLUS (1) LITE OF 3/16" HEAT STRENGTHENED GLASS .
   D. 7/16" LAMI NOM. (.465") CONSISTING OF (1) LITE OF 3/16" HEAT STRENGTHENED GLASS PLUS AN .090 PVB INTERLAYER OF DUPONT BUTACITE OR SAFLEX/KEEPSAFE MAXIMUM PLUS (1) LITE OF 3/16" HEAT STRENGTHENED GLASS.
2. DESIGN PRESSURES: SEE TABLES 1 AND 2 ON SHEET 2.
   A. NEGATIVE DESIGN LOADS BASED ON TESTED PRESSURE AND GLASS TABLES ASTM E 1300-02.
   B. POSITIVE DESIGN LOADS BASED ON WATER TEST PRESSURE AND GLASS TABLES ASTM E 1300-02.
3. CONFIGURATIONS: X, O, XX, XO, OX, XXO, OXX, OXO, AND OXXO.
4. ANCHORAGE: THE 33 1/3% STRESS INCREASE HAS NOT BEEN USED IN THE DESIGN OF THIS PRODUCT. MATERIALS, INCLUDING BUT NOT LIMITED TO STEEL SCREWS, THAT COME INTO CONTACT WITH OTHER DISSIMILAR MATERIALS, SHALL MEET THE REQUIREMENTS OF THE FBC, CURRENT EDITION. FOR ANCHORAGE REQUIREMENTS SEE SHEETS 8 THROUGH 10.
5. SHUTTERS ARE NOT REQUIRED.
6. SEALANT: INSTALLATION SCREWS, FRAME AND PANEL CORNERS SEALED WITH CLEAR COLORED SEALANT.
7. REFERENCES:
   TEST REPORT FTL-5212, ELCO TEXTRON NOA: 04-0721.01, 03-0225.05, ANSI/AF&PA NDS-2005 FOR WOOD CONSTRUCTION AND ADM-2005 ALUMINUM DESIGN MANUAL.
8. THIS PRODUCT HAS BEEN DESIGNED & TESTED TO COMPLY WITH THE REQUIREMENTS OF THE FLORIDA BUILDING CODE, INCLUDING THE HIGH VELOCITY HURRICANE ZONE (HVHZ).
9. CONFIGURATIONS WHICH CONTAIN A SIDE LITE TO DOOR CONNECTION :
   A. THE LOWER DESIGN PRESSURE FROM TABLE 1. OR 2. PREVAILS.
   B. FULL LENGTH REINFORCEMENT (ITEM 22 SHOWN IN SECTION E-E, SHEET 5), IS REQUIRED ONLY AT ALL DOOR TO SIDE LITE CONNECTIONS FROM TABLE 1., SHT. 2. REFER TO TABLE 2, SHT. 2 FOR DOOR TO SIDE LITE CONNECTIONS WHICH DO NOT REQUIRE ITEM 22 REINFORCEMENT.

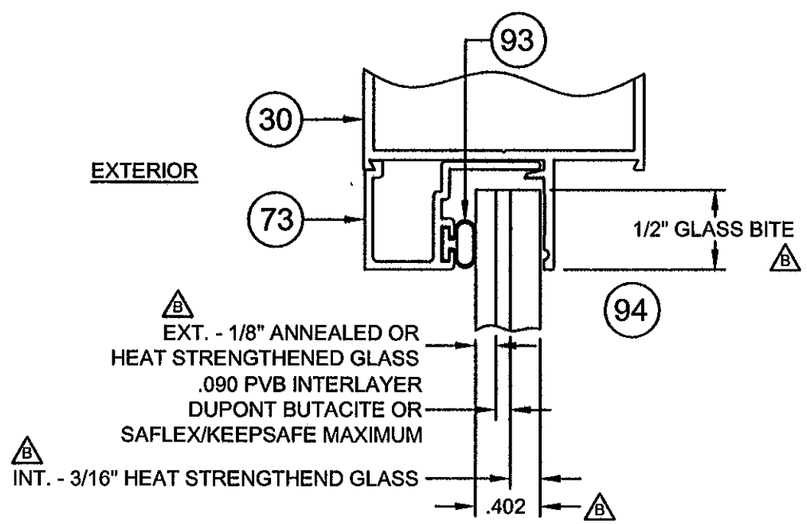

3/8" LAMI NOM.
GLAZING OPTION A OR B, NOTE 1

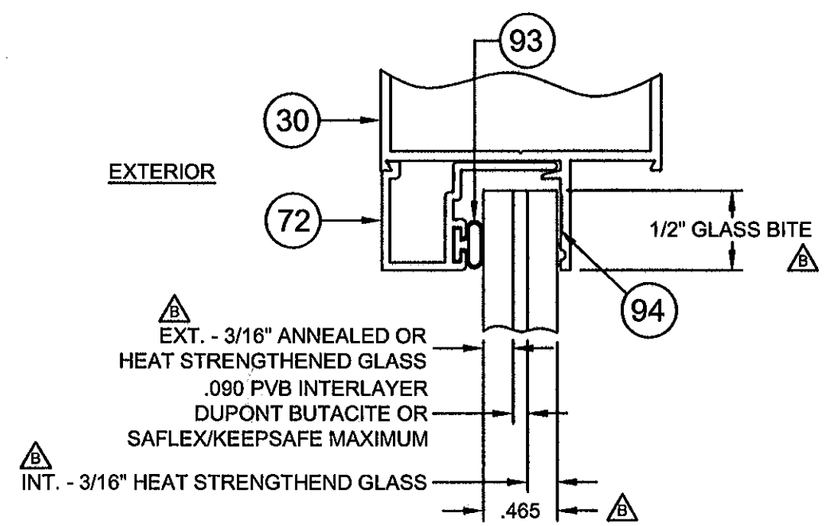

7/16" LAMI NOM.
GLAZING OPTION C OR D, NOTE 1

NOA DRAWING MAP

TOPIC	SHEET
GENERAL NOTES	1
CONFIGURATIONS	1
GLAZING DETAILS	1
DESIGN PRESSURES	2
ELEVATIONS	3
VERT. SECTIONS	4
HORIZ. SECTIONS	5
PARTS LIST	6
EXTRUSIONS	6, 7
ANCHORAGE	8-10

PRODUCT REVISED
as complying with the Florida
Building Code
Acceptance No. 11-1013.22
Registration Date OCT 18, 2012
Ishwar J. Chauda
Product Control

ANTHONY LYNN MILLER
LICENSE
No. 58705
10/11/11
STATE OF
FLORIDA
PROFESSIONAL ENGINEER
A. LYNN MILLER, P.E.
FL P.E.# 58705

Revsd By:	Date:	Revisions:	
J.J.	10/10/11	C	FBC 2010 CODE CHANGE
F.K.	9/18/07	B	CLARIFY EXT. OF GLASS, OVERALL THICKNESS AND GLASS BITE.
F.K.	8/14/07	A	ADD GLASS BITE DIM. TO GLAZING DETAILS, ADD GLASS DEC. THK., REVISE NOTE 1 , GLASS DESCRIPT. & ADD NOTE 9.
Drawn By: F.K.	Date: 2/22/07	Checked By: J.J.	Date: 6/21/07

1070 TECHNOLOGY DRIVE
NOKOMIS, FL 34275

P.O. BOX 1529
NOKOMIS, FL 34274

PGT
Visibly Better

Description: NOTES AND GLAZING DETAILS

Title: ALUM. FRENCH DOOR & SIDE LITES, IMPACT

Series/Model:	Scale:	Sheet:	Drawing No.	Rev:
FD101	1x	1 of 10	11005-1	C

TABLE 1. DESIGN PRESSURES FOR ALL CONFIGURATIONS

APPROVED CONFIGURATIONS: X, XX, O, OX, XO, OXO, XXO, OXX & OXXO

(FOR DOORS W/ SIDE LITES THE LOWER DP FOR THE DOOR OR SIDE LITE PREVAILS)

REINFORCEMENT IS REQUIRED AT DOOR & SIDE LITE CONNECTIONS

		DOORS WITH GLASS TYPES A, B, C OR D									
		HEIGHT									
X WIDTH	XX WIDTH	6^8 - 79 3/4"		7^0 - 83 3/4"		87 3/4"		91 3/4"		8^0 - 95 3/4"	
3^0 37 1/2"	6^0 71 3/4"	+75.0	-75.0	+75.0	-75.0	+75.0	-75.0	+75.0	-75.0	+75.0	-75.0
	O WIDTH	SINGLE SIDE LITES WITH GLASS TYPE A									
	27 3/4"	+75.0	-75.0	+75.0	-75.0	+75.0	-75.0	+75.0	-75.0	+75.0	-75.0
	36 1/8"	+75.0	-75.0	+75.0	-75.0	+71.4	-71.4	+67.6	-67.6	+64.2	-64.2
	36 3/4"	+75.0	-75.0	+74.9	-74.9	+70.4	-70.4	+66.6	-66.6	+63.1	-63.1
	O WIDTH	SINGLE SIDE LITES WITH GLASS TYPES B, C OR D									
	36 3/4"	+75.0	-75.0	+75.0	-75.0	+75.0	-75.0	+75.0	-75.0	+75.0	-75.0

TABLE 2. DESIGN PRESSURES FOR COMBINED DOOR / SIDE LITES ONLY

APPROVED CONFIGURATIONS: OX, XO, OXO, XXO, OXX & OXXO

(THE LOWER DP FOR THE DOOR OR SIDE LITE PREVAILS.)

REINFORCEMENT IS NOT REQUIRED AT DOOR & SIDE LITE CONNECTION

		GLASS TYPES A, B, C OR D									
		HEIGHT									
X WIDTH	XX WIDTH	6^8 - 79 3/4"		7^0 - 83 3/4"		87 3/4"		91 3/4"		8^0 - 95 3/4"	
2^0 25 1/2"	4^0 47 3/4"	+58.6	-58.6	+55.4	-55.4	+52.4	-52.4	+49.8	-49.8	+47.4	-47.4
27 1/2"	51 3/4"	+54.9	-54.9	+51.8	-51.8	+49.0	-49.0	+46.5	-46.5	+44.3	-44.3
29 1/2"	55 3/4"	+51.7	-51.7	+48.8	-48.8	+46.1	-46.1	+43.8	-43.8	+41.6	-41.6
2^6 31 1/2"	5^0 59 3/4"	+49.0	-49.0	+46.2	-46.2	+43.6	-43.6	+41.4	-41.4	+39.3	-39.3
2^8 33 1/2"	5^4 63 3/4"	+43.1	-43.1	+43.1	-43.1	+41.5	-41.5	+39.3	-39.3	+37.3	-37.3
35 1/2"	67 3/4"	+38.1	-38.1	+38.1	-38.1	+38.1	-38.1	+37.5	-37.5	+35.6	-35.6
3^0 37 1/2"	6^0 71 3/4"	+34.0	-34.0	+34.0	-34.0	+34.0	-34.0	+34.0	-34.0	+34.0	-34.0
SINGLE SIDE LITE	O WIDTH	GLASS TYPES A, B, C OR D									
	10 3/4"	+75.0	-75.0	+75.0	-75.0	+75.0	-75.0	+75.0	-75.0	+75.0	-75.0
	12 3/4"	+75.0	-75.0	+75.0	-75.0	+75.0	-75.0	+75.0	-75.0	+75.0	-75.0
	19"	+72.4	-72.4	+68.5	-68.5	+65.0	-65.0	+61.9	-61.9	+59.0	-59.0
	21 3/4"	+64.5	-64.5	+61.0	-61.0	+57.8	-57.8	+55.0	-55.0	+52.4	-52.4
	27 3/4"	+52.9	-52.9	+49.9	-49.9	+47.2	-47.2	+44.7	-44.7	+42.6	-42.6
	36 1/8"	+35.2	-35.2	+35.2	-35.2	+35.2	-35.2	+35.2	-35.2	+34.4	-34.4
	36 3/4"	+34.0	-34.0	+34.0	-34.0	+34.0	-34.0	+34.0	-34.0	+34.0	-34.0

NOTES:

1. GLASS TYPES:
   A. 3/8" LAMI (1/8" A, .090 PVB, 3/16" HS)
   B. 3/8" LAMI (1/8" HS, .090 PVB, 3/16" HS)
   C. 7/16" LAMI (3/16" A, .090 PVB, 3/16" HS)
   D. 7/16" LAMI (3/16" HS, .090 PVB, 3/16" HS)

2. COMBINED DOOR & SIDE LITE WIDTHS FOR TABLE 1 OR 2.
   MAX. OX/XO WIDTH = 73 1/2"
   MAX. OXO WIDTH = 109 1/2"
   MAX. XXO/OXX WIDTH = 107 3/4"
   MAX. OXXO WIDTH = 143 3/4"

3. SINGLE DOORS 33 5/8" WIDE OR OVER AND THE OPERABLE PANEL OF DOUBLE DOORS 64 1/8" WIDE OR OVER FROM EITHER TABLE COMPLY WITH THE EGRESS REQUIREMENTS OF THE FBC. NARROWER DOORS MAY BE USED WHERE EGRESS IS NOT REQUIRED BY CODE.

4. DESIGN PRESSURES UNDER 40 P.S.F. ARE NOT APPLICABLE IN MIAMI-DADE COUNTY.

5. EXAMPLES OF COMBINED DOOR AND SIDE LITE DESIGN PRESSURES:

   EX. A FROM TABLE 1.
   OXO WITH GLASS TYPE A
   30" WIDE x 90" HIGH SINGLE DOOR WITH 29" SIDE LITES
   DESIGN PRESSURE = +67.6 / -67.6 PSF

   EX. B FROM TABLE 1.
   OXXO WITH GLASS TYPE A
   68" WIDE x 85" HIGH DOUBLE DOOR WITH 36 1/2" SIDE LITES
   DESIGN PRESSURE = +70.4 / -70.4 PSF

   EX. C FROM TABLE 2.
   OXO WITH GLASS TYPE C
   30" WIDE x 87 3/4" HIGH SINGLE DOOR WITH 26" SIDE LITES
   DESIGN PRESSURE = +43.6 / -43.6 PSF

   EX. D FROM TABLE 2.
   OXXO WITH GLASS TYPE C
   63 3/4" WIDE x 80" HIGH DOUBLE DOOR WITH 26" SIDE LITES
   DESIGN PRESSURE = +43.1 / -43.1 PSF

6. FOR COMBINED DOOR AND SIDE LITES FROM TABLE 1, WHICH REQUIRED REINFORCEMENT AT DOOR TO SIDE LITE CONNECTION SEE SECTION E-E, SHEET 5 FOR REINFORCEMENT DETAIL.

PRODUCT REVISED
as complying with the Florida Building Code
Acceptance No. 11-1013.22
Expiration Date OCT 13, 2012
By [illegible]
Chief, Bureau Product Control

ANTHONY LYNN MILLER
LICENSE
No. 58705
STATE OF FLORIDA
PROFESSIONAL ENGINEER
A. LYNN MILLER, P.E.
FL P.E.# 58705

Revised By:	Date:	Revisions:	
J.J.	10/10/11	C	FBC 2010 CODE CHANGE
F.K.	8/18/07	B	REVISED TABLE 2. DESIGN PRESSURES AND CLARIFIED NON- REINF. VERSION COMBINE GLASS TYPES & MAX SIZES INTO NOTES & ADD NOTES 5 & 6.
F.K.	8/14/07	A	REVISE NOTE 1, 2 & 3. ADD NOTATIONS TO TABLE 1 AND 2. REDUCE MAX. SIZE DESIGN PRESSURE AND ADJUST. ALL DPS FOR TABLE 2
Drawn By: F.K.	Date: 2/22/07	Checked By: J.J.	Date: 6/21/07

1070 TECHNOLOGY DRIVE
NOKOMIS, FL 34275

P.O. BOX 1529
NOKOMIS, FL 34274

PGT
Visibly Better

Description: DESIGN PRESSURES

Title: ALUM. FRENCH DOOR & SIDE LITES, IMPACT

Series/Model:	Scale:	Sheet:	Drawing No.	Rev:
FD101	1x	2 of 10	11005-1	C

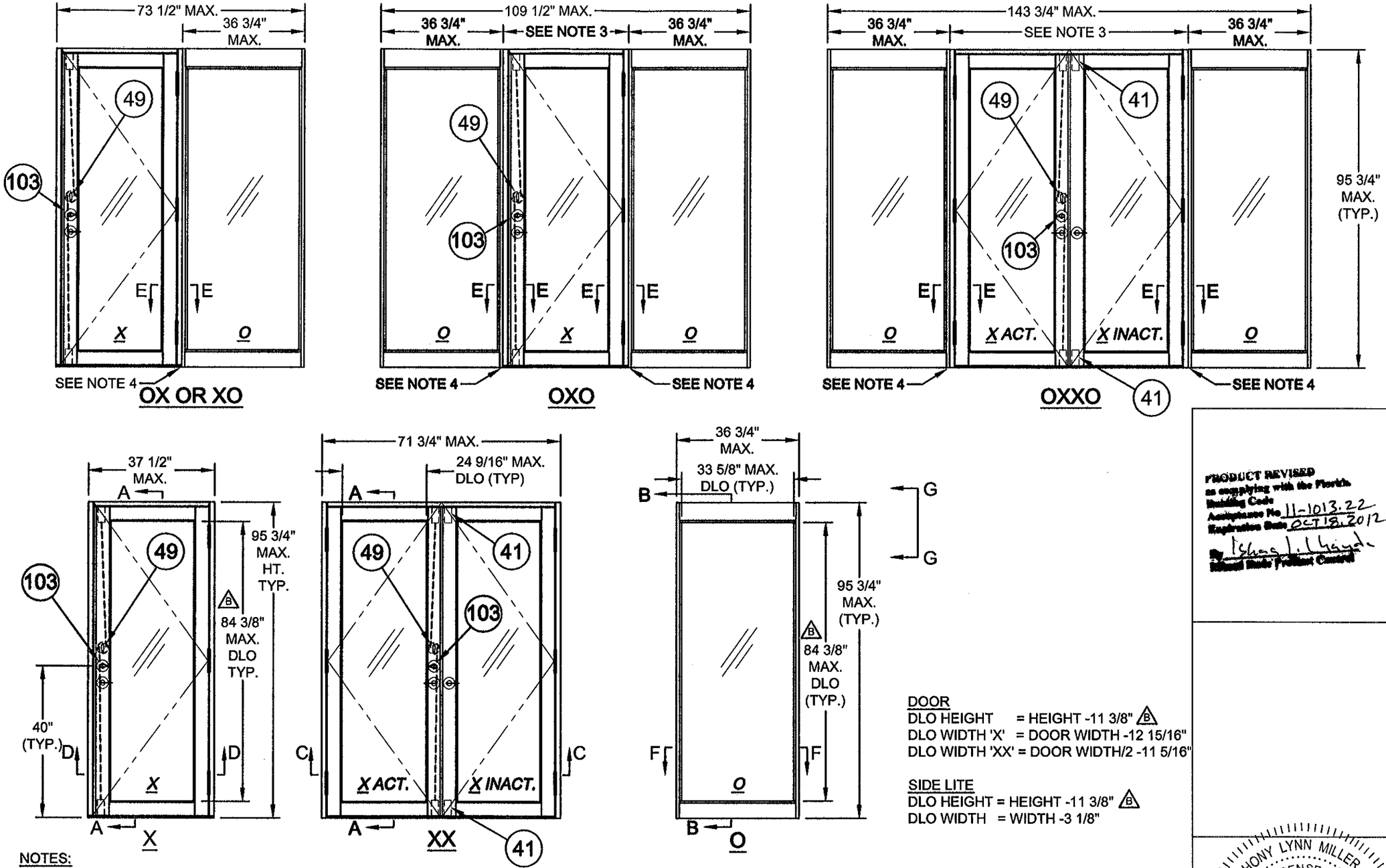

DOOR
DLO HEIGHT = HEIGHT -11 3/8" (B)
DLO WIDTH 'X' = DOOR WIDTH -12 15/16"
DLO WIDTH 'XX' = DOOR WIDTH/2 -11 5/16"

SIDE LITE
DLO HEIGHT = HEIGHT -11 3/8" (B)
DLO WIDTH = WIDTH -3 1/8"

NOTES:
1. FOR ANCHORAGE DETAILS SEE SHEETS 8 THROUGH 10.
2. FOR HORIZONTAL AND VERTICAL SECTIONS SEE SHEETS 4 AND 5.
3. SIDE LITES OVERLAP 'X' AND 'XX' DOORS BY 3/4" WHEN ASSEMBLED TO MAKE 'XO', 'OX', 'OXO' 'XXO', 'OXX' AND 'OXXO' CONFIGURATIONS.
4. REINFORCEMENT LOCATION FOR SIDE LITE TO DOOR CONNECTIONS (SEE APPLICABILITY SHEET 2).
5. CLEAR OPENING FOR 'X' AND 'XX' DOORS AS FOLLOWS: ('X' DOORS = WIDTH - 5.646) ('XX' DOOR = DOOR WIDTH/2 -4.079)

PRODUCT REVISED as complying with the Florida Building Code
Acceptance No. 11-1013.22
Expiration Date OCT 18, 2012
By Ishag L. Chayda
Ethical State Product Control

Revsd By:	Date:	Revisions:	
J.J.	10/10/11	C	NO CHANGE THIS SHEET
F.K.	9/18/07	B	CORRECT VERTICAL DLO AND FORMULAS
F.K.	8/14/07	A	ADD DLO FORMULAS FOR DOOR AND SIDE LITE. ADD DOOR DLO DIM. IDENTIFY DEAD BOLT AND SPECIFY 'X' ACT. AND 'X' INACT.
Drawn By: F.K.	Date: 2/22/07	Checked By: J.J.	Date: 6/21/07

1070 TECHNOLOGY DRIVE
NOKOMIS, FL 34275

P.O. BOX 1529
NOKOMIS, FL 34274

PGT
Visibly Better

Description: ELEVATIONS
Title: ALUM. FRENCH DOOR & SIDE LITES, IMPACT

Series/Model:	Scale:	Sheet:	Drawing No.	Rev:
FD101	NTS	3 of 10	11005-1	C

ANTHONY LYNN MILLER
LICENSE
No. 58705
10/11/11
STATE OF FLORIDA
PROFESSIONAL ENGINEER

A. LYNN MILLER, P.E.
FL P.E.# 58705

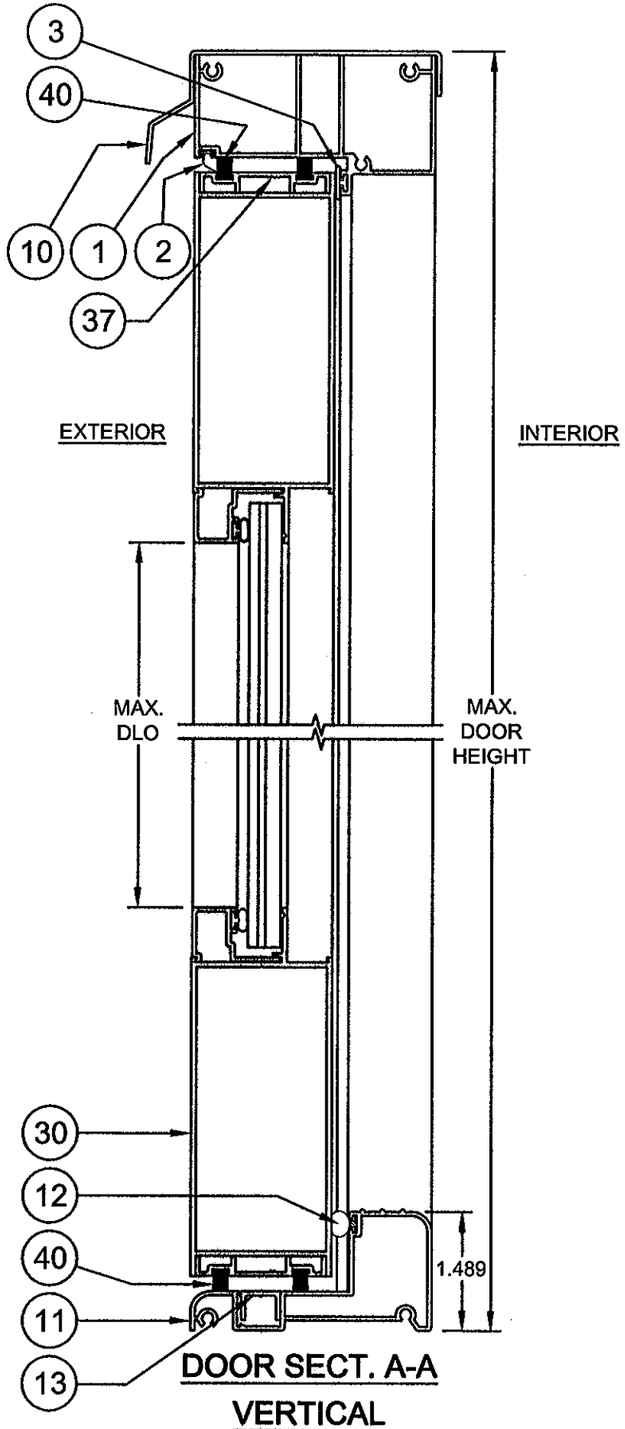

DOOR SECT. A-A
VERTICAL

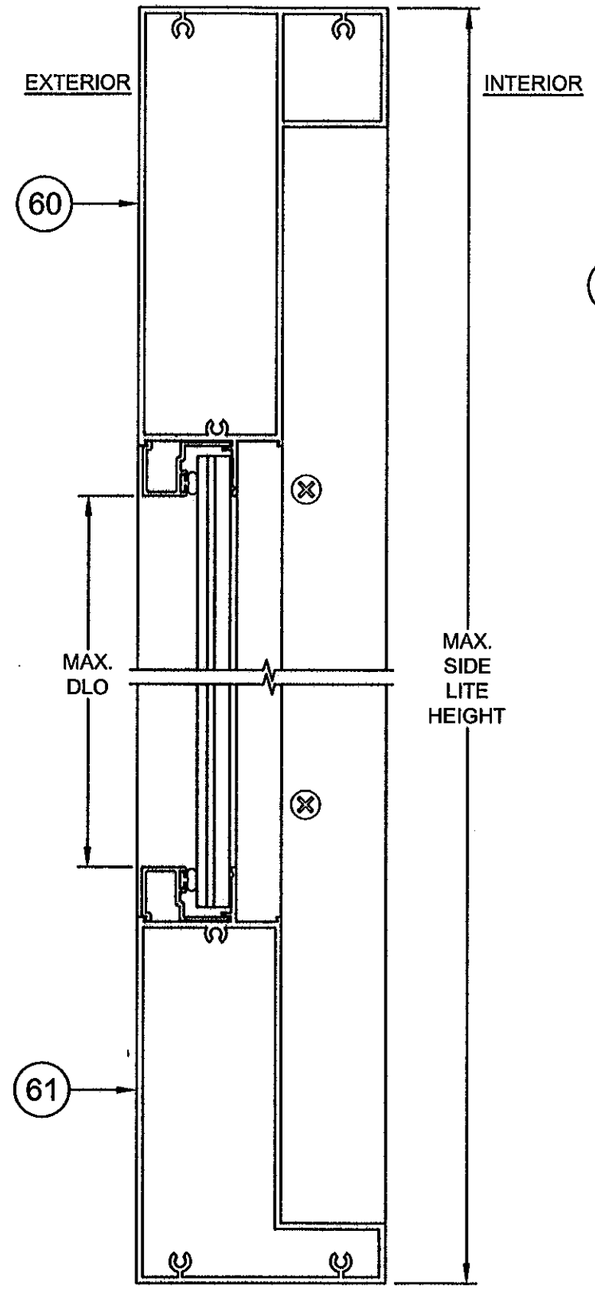

SL SECT. B-B
VERTICAL

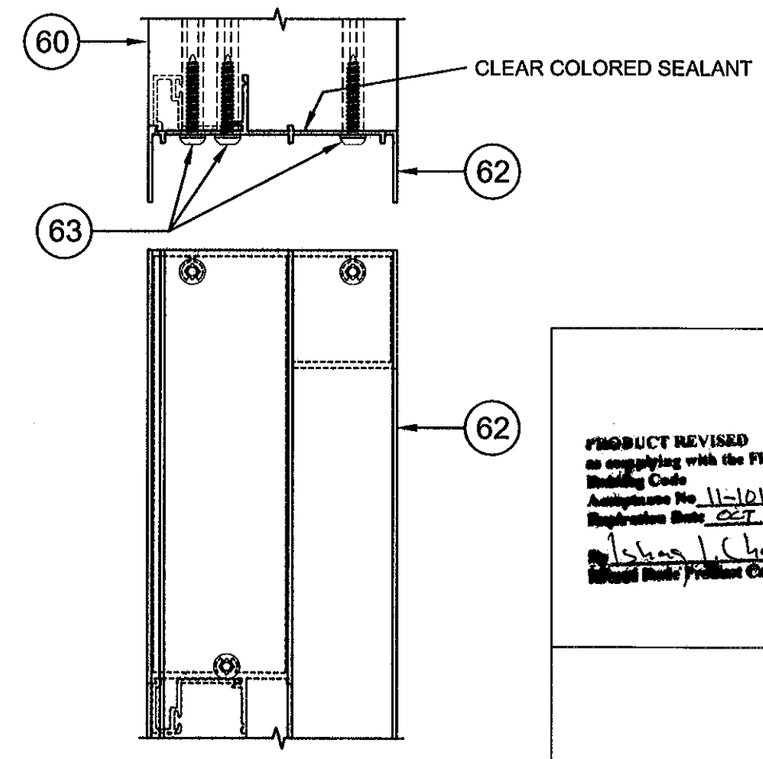

SL VIEW G-G
CORNER ASSEMBLY

PRODUCT REVISED
as complying with the Florida Building Code
Acceptance No. 11-1013.22
Expiration Date: OCT 18, 2012
Ishan L. Chaudhuri
Product Control

Revsd By:	Date:	Revisions:	
J.J.	10/10/11	C	NO CHANGE THIS SHEET
Revsd By: F.K.	Date: 9/18/07	Revisions: B	NO CHANGE THIS SHEET.
Revsd By: F.K.	Date: 8/14/07	Revisions: A	SHOW DOUBLE HOLLOW HEAD SECTION AT CORNER ASSEMBLY
Drawn By: F.K.	Date: 2/22/07	Checked By: J.J.	Date: 6/21/07

1070 TECHNOLOGY DRIVE
NOKOMIS, FL 34275

P.O. BOX 1529
NOKOMIS, FL 34274

PGT
Visibly Better

Description: EXAMPLE ELEVATIONS

Title: ALUM. FRENCH DOOR & SIDE LITES, IMPACT

Series/Model:	Scale:	Sheet:	Drawing No.	Rev:
FD101	1/2x	4 of 10	11005-1	C

ANTHONY LYNN MILLER
LICENSE
No. 58705
STATE OF FLORIDA
PROFESSIONAL ENGINEER
10/11/11

A. LYNN MILLER, P.E.
FL P.E.# 58705

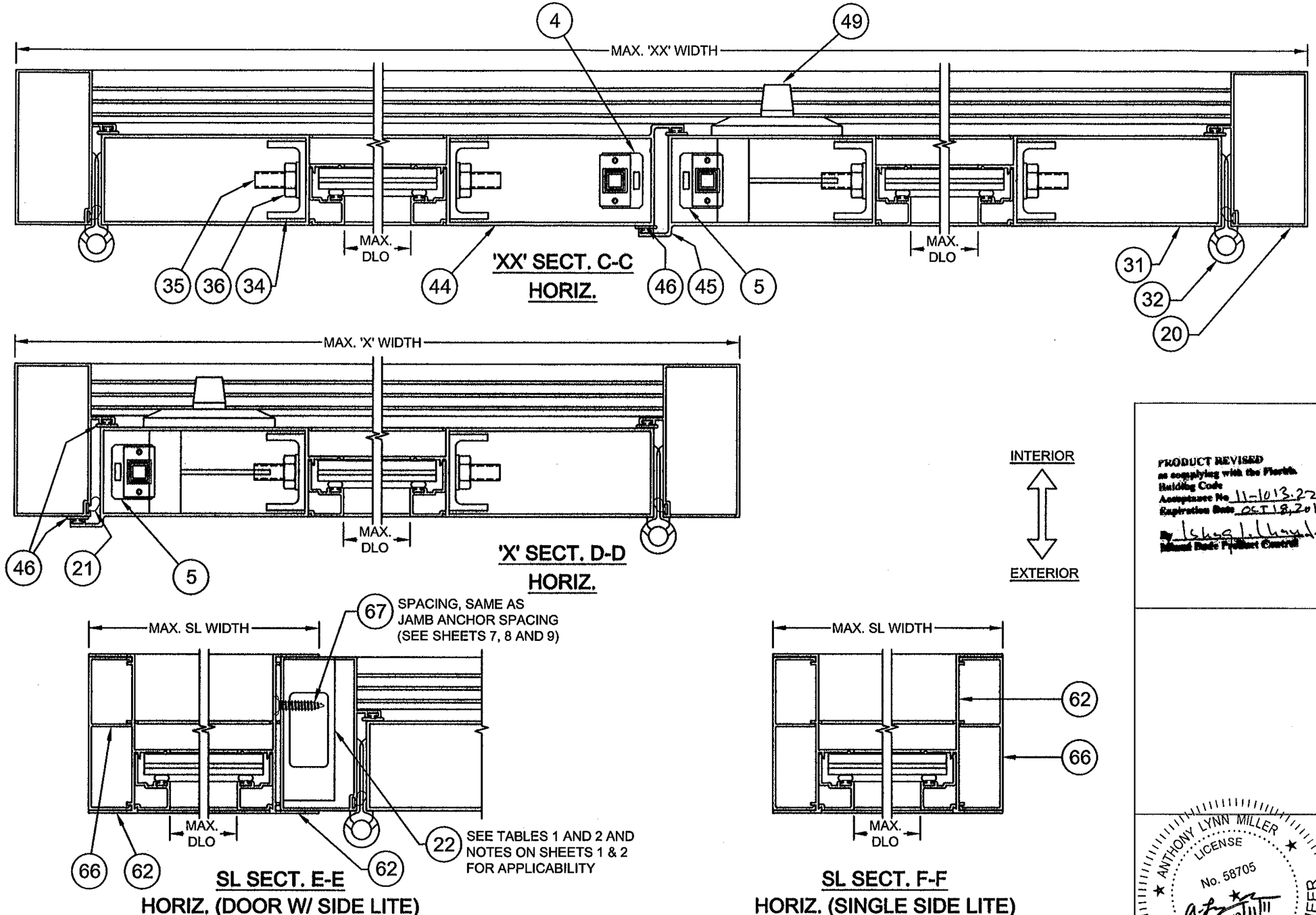

'XX' SECT. C-C
HORIZ.

'X' SECT. D-D
HORIZ.

SL SECT. E-E
HORIZ. (DOOR W/ SIDE LITE)

SL SECT. F-F
HORIZ. (SINGLE SIDE LITE)

PRODUCT REVISED
as complying with the Florida
Building Code
Acceptance No 11-1013.22
Expiration Date OCT 18, 2012
By [signature]
Miami Dade Product Control

Revsd By:	Date:	Revisions:	
J.J.	10/10/11	C	NO CHANGE THIS SHEET
F.K.	9/18/07	B	NO CHANGE THIS SHEET.
F.K.	8/14/07	A	ADD "DOOR W/ SIDE LITE" TO SECTION E-E & "SINGLE SIDE LITE" TO SECT. F-F
Drawn By: F.K.	Date: 2/22/07	Checked By: J.J.	Date: 6/21/07

1070 TECHNOLOGY DRIVE
NOKOMIS, FL 34275

P.O. BOX 1529
NOKOMIS, FL 34274

PGT
Visibly Better

Description: VERTICAL SECTIONS

Title: ALUM. FRENCH DOOR & SIDE LITES, IMPACT

Series/Model:	Scale:	Sheet:	Drawing No.	Rev:
FD101	1/2x	5 of 10	11005-1	C

ANTHONY LYNN MILLER
LICENSE
No. 58705
STATE OF FLORIDA
PROFESSIONAL ENGINEER

A. LYNN MILLER, P.E.
FL P.E.# 58705

ITEM	DWG #	PGT#	DESCRIPTION
1	943B	60411	FRAME HEAD
2	1010	6Q300	WSTP.,Q-LON .190 X .375 HIGH
3	7070	67070K	BULB WEATHERSTRIP .187 X .300 HIGH
4	955	7955X	FLUSHBOLT STRIKEPLATE
5	938	7938X	2 PT. LOCK STRIKEPLATE
6	956	7956A	FRAME HEAD STRIKEPLATE BACKING PLATE
7		7832X12FPXP	#8-32 X .500 PH. FL. MS - S.S. W/SILICONE PATCH
8	995	70995	GASKET (BETWEEN THRESHOLD & FRAME JAMB)
9	996	70996	GASKET (BETWEEN HEAD & FRAME JAMB)
10	952A	6533016	FILLER HEAD ADAPTER
11	11000	611000M	OUTSWING THRESHOLD
12	1670	671670	WSTP, .350 RD FOAM FILL T-SLOT (AMSBURY#32011)
13	11004A	611004M	OUTSWING THRESHOLD CHANNEL COVER
14	11001A	411001A	ACETAL SPACER .065 (INHOUSE INJECTION MOLDED)
15	11002A	411002A	ACETAL SPACER .095 (INHOUSE INJECTION MOLDED)
16	11003A	411003A	ACETAL SPACER .140 (INHOUSE INJECTION MOLDED)
20	915D	60380	FRAME JAMB (OUTSWING)
21	1010	6Q300	WSTP.,Q-LON .190 X .375 HIGH
22	6608	66608M	REINFORCEMENT, 1.000 X 2.750 X 0.650, 6061-T5
23	1140	76X112PSATS	#8 X 1.500 PH SQ A T/S
24	1048	71048	JAMB SCREW COVER CAP
25	930	41721N	STRIKE PLATE INSERT
26	1118	710X34PFA	#10 X .750 PH. FL. SMS
27	7070	67070K	BULB WEATHERSTRIP .187 X .300 HIGH
30	910D	6910	DOOR PANEL, TOP & BOTTOM RAIL
31	911E	6911	DOOR PANEL, SIDE RAIL
32	917	7FRMO	HINGE EXTRUSION
33	1178	71058FP W,B	#10 X .625 PH. FL. SMS
34	913A	60378M	TRUSS CLAMP
35	1130	6TRODA	5/16-18 THREADED ROD
36	990	7990NUTA	5/16-18 FLANGED HEX NUT
37	914A	60379M	WEATHERSTRIP CHANNEL
38		7834FPT	#8 X .75 PH. FL. TEK
39	997	70997	GASKET (BETWEEN PANEL HEAD/SILL & PANEL STILES)
40	1023	67924G	WSTP., .187 X .250 HIGH, FINSEAL
41	928	41720	SLIDE BOLT ASSY. (INACTIVE PANEL ONLY)
42	1145	76X12FPAW	#6 X .500 PH FL SMS TYPE BDS
43	1212	7P30GG	SILL DUST PLUG (INACTIVE PNL)
44	983B	6983	DOOR PANEL ASTRAGAL 1 (OUTSWING)
45	984B	6984	DOOR PANEL ASTRAGAL 2 (OUTSWING)
46	1213	6Q200K	WSTP.,Q-LON .190 X .200 HIGH
47	929	74UBLOK	LOCK SUPPORT ASSY. (41707 & 41708)
48	1139	7634F	#6 X .750 PH. FL. SMS
49	982	FD2PTAY	2 PT. LOCK ASSY.
50		6R180FS	RUBBER SLEEVE
51	930	41721	STRIKE PL. INSERT (INACTIVE PANEL)
52	931	7FRSPX	DEADBOLT STRIKE PLATE
53	1118	710X34PFA	#10 X .750 PH FL. SMS
54	957	70957X	HANDLE STRIKE PLATE
55	1118	710X34PFA	#10 X .750 PH FL. SMS

ITEM	DWG #	PGT#	DESCRIPTION
60	920D	6920D	SIDELITE HEADER
61	921D	6921	SIDELITE SILL
62	916B	60381	SIDELITE JAMB
63	1155	781PQA	#8 X 1.000 QUAD PN. SMS
64	998	7998	HEAD GASKETS (STOCKING #70998)
65	999	7999	SILL GASKETS (STOCKING #70999)
66	934A	61641M	SIDELITE JAMB ADAPTER
67			#12 X 1.000 SHEET METAL SCREW
70		712653K	SETTIING BLOCK, 3/32" X 1/4" X 1" W/PSA
71		71267K	SETTING BLOCK, 1/16" X 1/2" X 1" W/PSA
72	4222A	64222	BEAD, 7/16"
73	988	6988	BEAD, 3/8"
92	986	64986	BEAD, INTERIOR
93	1224	6TP247	BULB, THICK (USED IN EXTRUDED BEAD)
94	GLAZING SILICONE, DOW 899, 983 ~~OR EQUIVALENT~~		
95	GLASS, 3/8" LAMI - 1/8" A, .90 PVB, 3/16" HS		
96	GLASS, 3/8" LAMI - 1/8" HS, .90 PVB, 3/16" HS		
97	GLASS, 7/16" LAMI - 3/16" A, .90 PVB, 3/16" HS		
98	GLASS, 7/16" LAMI - 3/16" HS, .90 PVB, 3/16" HS		
~~102~~	~~11006A~~	~~41106A~~	~~ACETAL SPACER .295 (INHOUSE INJECTION MOULDED)~~
103	OFF-THE SHELF		DEAD BOLT LOCK

N/A

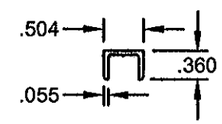

(13) OUTSWING THRESHOLD CHANNEL COVER 6063-T6

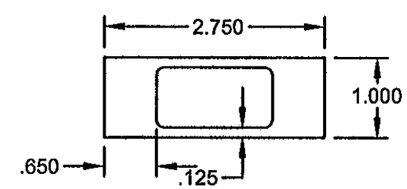

(22) TUBE MULL 6063-T5

PRODUCT REVISED as complying with the Florida Building Code Acceptance No. 11-1013.22 Expiration Date OCT 18, 2012

By Shag J. Chayk Manager Product Control

Revised By:	Date:	Revisions:	
J.J.	10/10/11	C	NO CHANGE THIS SHEET
F.K.	9/18/07	B	NO CHANGE THIS SHEET.
F.K.	8/14/07	A	ADD ITEM 103 DEAD BOLT AND "INACTIVE PANEL ONLY" TO ITEM 41.
Drawn By: F.K.	Date: 2/22/07	Checked By: J.J.	Date: 6/21/07

1070 TECHNOLOGY DRIVE
NOKOMIS, FL 34275

P.O. BOX 1529
NOKOMIS, FL 34274

PGT Visibly Better

Description: PARTS LIST

Title: ALUM. FRENCH DOOR & SIDE LITES, IMPACT

Series/Model:	Scale:	Sheet:	Drawing No.	Rev:
FD101	1/2x	6 of 10	11005-1	C

ANTHONY LYNN MILLER LICENSE No. 58705 STATE OF FLORIDA PROFESSIONAL ENGINEER

10/11/11

A. LYNN MILLER, P.E.
FL P.E.# 58705

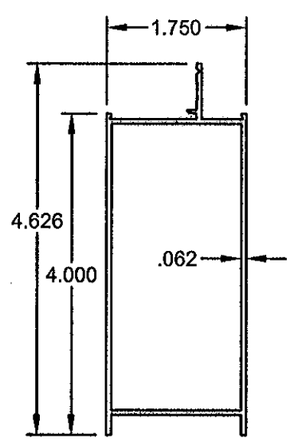

30 DOOR PANEL TOP & BOTTOM RAIL 6063-T5

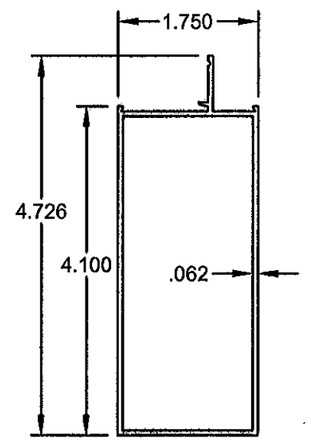

31 DOOR PANEL SIDE RAIL 6063-T5

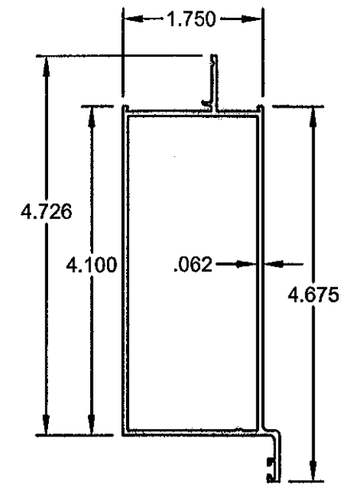

44 DOOR PANEL INTERIOR ASTRAGAL 6063-T5

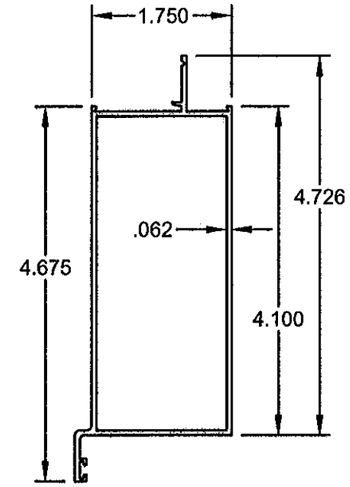

45 DOOR PANEL EXTERIOR ASTRAGAL 6063-T5

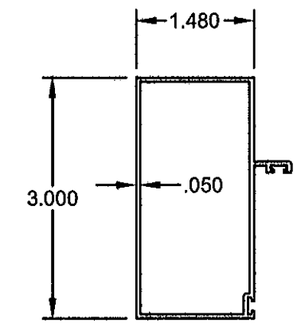

20 DOOR FRAME, JAMB 6063-T6

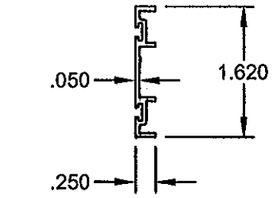

37 WEATHER STRIP CHANNEL 6063-T5

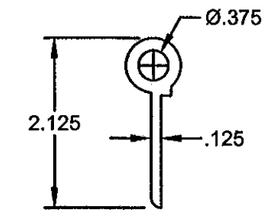

32 HINGE 6063-T5

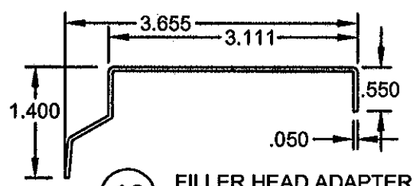

10 FILLER HEAD ADAPTER 6063-T6

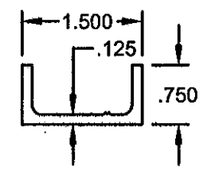

34 TRUSS CLAMP 6063-T5

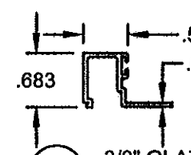

73 3/8" GLAZING BEAD 6063-T5

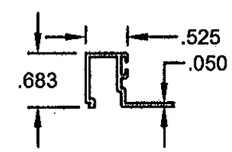

72 7/16" GLAZING BEAD 6063-T5

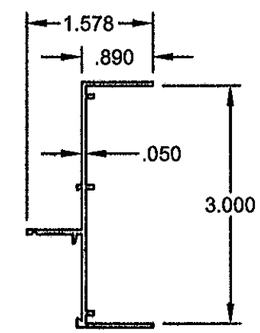

62 SL JAMB 6063-T6

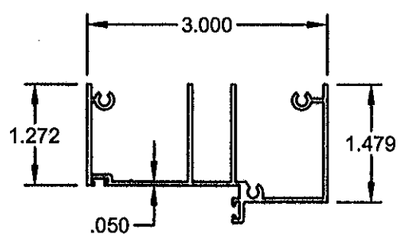

1 FRAME HEAD 6063-T6

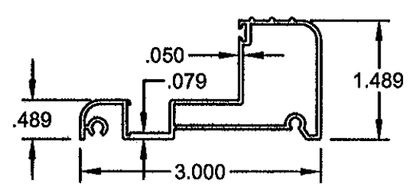

11 OUTSWING THRESHOLD 6063-T6

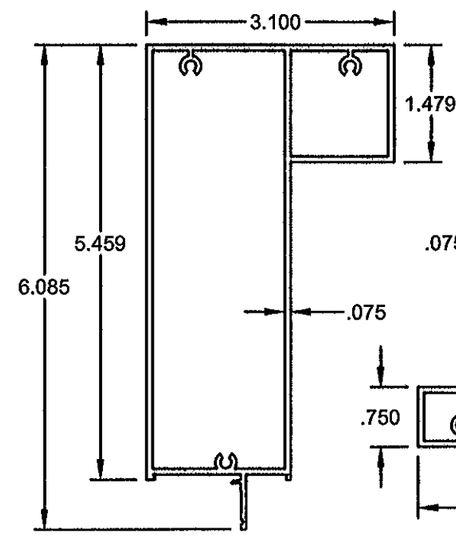

60 SL HEADER 6063-T6

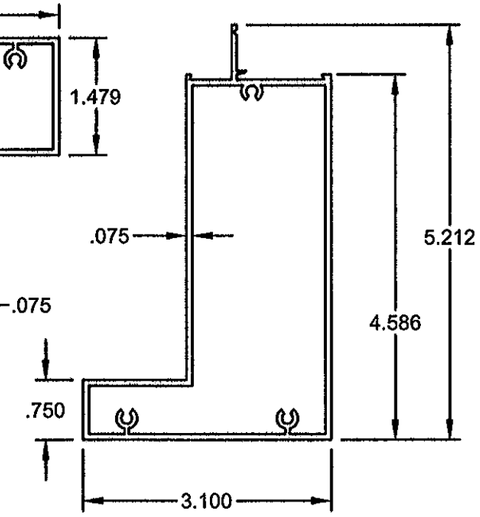

61 SL SILL 6063-T6

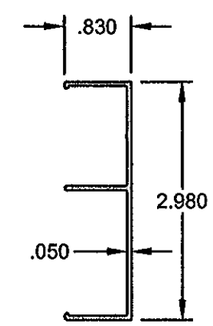

66 SL JAMB ADAPTER 6063-T6

PRODUCT REVISED as complying with the Florida Building Code
Acceptance No. 11-1013.22
Expiration Date OCT 19, 2012
By Ishag I. Chaudhary
Miami-Dade Product Control

Revised By:	Date:	Revisions:	
J.J.	10/10/11	C	NO CHANGE THIS SHEET
F.K.	9/18/07	B	NO CHANGE THIS SHEET.
F.K.	8/14/07	A	ADD "DOOR" TO ITEM 20 & GLASS BED DIM. TO ITEMS 30, 31, 44, 45 & 62
Drawn By: F.K.	Date: 2/22/07	Checked By: J.J.	Date: 6/21/07

1070 TECHNOLOGY DRIVE
NOKOMIS, FL 34275

P.O. BOX 1529
NOKOMIS, FL 34274

PGT Visibly Better

Description: EXTRUSION PROFILES

Title: ALUM. FRENCH DOOR & SIDE LITES, IMPACT

Series/Model:	Scale:	Sheet:	Drawing No.	Rev:
FD101	1/2x	7 of 10	11005-1	C

ANTHONY LYNN MILLER LICENSE No. 58705 STATE OF FLORIDA PROFESSIONAL ENGINEER

A. LYNN MILLER, P.E.
FL P.E.# 58705

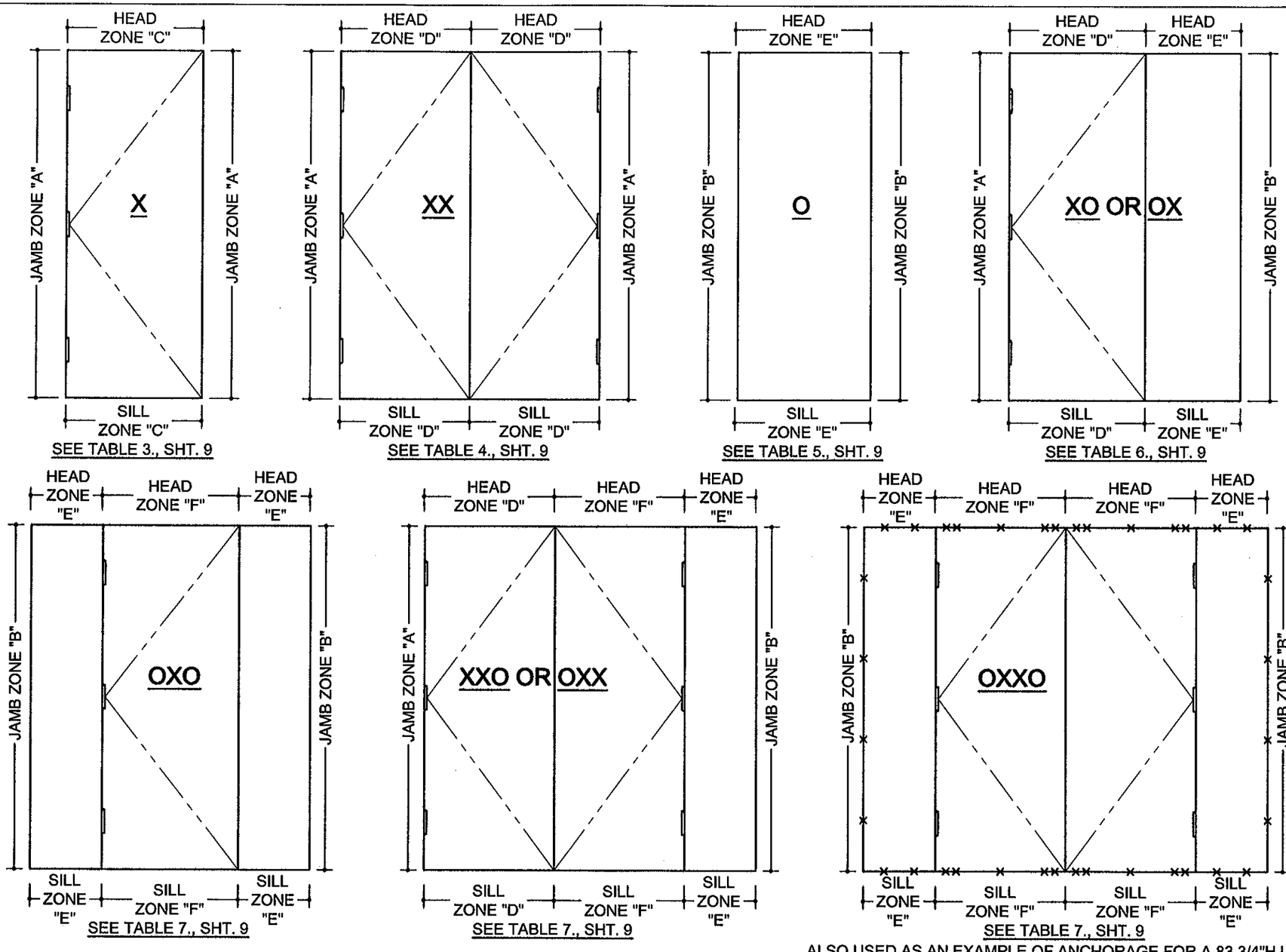

EXAMPLE ANCHORAGE SOLUTION FOR A CONCRETE OXXO INSTALLATION

A. 19" x 83 3/4" SIDE LITES "B" AND "E" ZONE ANCHORS FROM TABLE 7, SHEET 9.

PLUS;

B. 71 3/4" x 83 3/4" XX DOOR ZONE "F" ANCHORS FROM TABLE 4, SHEET 9, EACH "F" ZONE.

SEE ENCIRCLED VALUES, SHEET 9

SOLUTION:
TOTALS (4) TYPE 1 OR 2 ANCHORS EACH JAMB AND 2+5+5+2 = (14) TYPE 1 OR 2 ANCHORS AT HEAD AND AT SILL.

ALSO USED AS AN EXAMPLE OF ANCHORAGE FOR A 83 3/4"H UNIT, 71 3/4"W 'XX' DOOR WITH 19"W SIDE LITES (SEE SOLUTION ABOVE)

PRODUCT REVISED
in complying with the Florida Building Code
Application No. 11-1013.22
Expiration Date OCT 18, 2012
By Ishaq I. Khanda
Manager Code/Product Control

NOTES:

1. APPROVED ANCHOR TYPES ARE: 1. 1/4" ELCO TAPCONS 2. 1/4" ELCO SS4 CRETE-FLEX MASONRY ANCHORS 3. #12 SCREWS
2. ANCHOR QUANTITIES ARE BASED ON SPACING AS FOLLOWS (3" MIN. O.C. FOR CONCRETE): SEE EXAMPLE OXXO ANCHOR LAYOUT ABOVE.
   JAMBS (ALL): 13 1/4" MAX. FROM CORNERS AND 23 1/8" MAX. O.C.
   HEAD & SILL OF DOORS: 6" MAX. FROM CORNERS, 9" MAX. FROM ASTRAGAL CENTERS AND 20 7/8" MAX. O.C.
   HEAD & SILL OF SIDE LITES: 6" MAX. FROM CORNERS AND 24 3/4" MAX. O.C.
3. TO DETERMINE ANCHOR QUANTITIES FIND THE CONFIGURATION ABOVE THEN REFER TO THE APPROPRIATE TABLES ON SHEET 9.

Revsd By:	Date:	Revisions:	
J.J.	10/10/11	C	NO CHANGE THIS SHEET
F.K.	8/18/07	B	NO CHANGE THIS SHEET.
F.K.	8/14/07	A	CHANGE 'XO' OR 'OX' ANCHOR ZONE FROM 'C' TO 'D'. ADD ANCHOR TYPES TO SOLUTION.
Drawn By: F.K.	Date: 2/22/07	Checked By: J.J.	Date: 6/21/07

1070 TECHNOLOGY DRIVE
NOKOMIS, FL 34275

P.O. BOX 1529
NOKOMIS, FL 34274

PGT Visibly Better

Description: ANCHORAGE, CONFIGURATIONS

Title: ALUM. FRENCH DOOR & SIDE LITES, IMPACT

Series/Model:	Scale:	Sheet:	Drawing No.	Rev:
FD101	NTS	8 of 10	11005-1	C

ANTHONY LYNN MILLER
LICENSE
No. 58705
10/11/11
STATE OF FLORIDA
PROFESSIONAL ENGINEER

A. LYNN MILLER, P.E.
FL P.E.# 58705

TABLE 3. X DOORS

GLASS TYPES ANCHOR TYPE & SUBSTRATE	A, B, C, D					
	2,3, WOOD			1,2, CONC		
DOOR WIDTHS "X" - 25.50 TO 37.50	LOAD ZONES					
WIDTH x HT.	X - JAMB "A"	X - HEAD/SILL "C"	X - HEAD/SILL "F" (USE W / TABLE 7.)	X - JAMB "A"	X - HEAD/SILL "C"	X - HEAD/SILL "F" (USE W / TABLE 7.)
25.50 x 79.75	5	2	7	4	2	3
83.75	5	2	7	4	2	3
87.75	5	2	7	4	2	3
91.75	5	2	7	4	2	3
95.75	6	2	7	4	2	3
27.50 x 79.75	5	2	7	4	2	3
83.75	5	2	7	4	2	3
87.75	5	2	7	4	2	3
91.75	6	2	7	4	2	5
95.75	6	2	7	4	2	5
29.50 x 79.75	5	2	8	4	2	3
83.75	5	2	8	4	2	3
87.75	6	2	8	4	2	5
91.75	6	2	8	4	2	5
95.75	6	2	8	4	2	5
31.50 x 79.75	5	2	8	4	2	3
83.75	6	2	8	4	2	5
87.75	6	2	8	4	2	5
91.75	6	2	8	4	2	5
95.75	7	2	10	4	2	5
33.50 x 79.75	6	3	8	4	3	3
83.75	6	3	8	4	3	5
87.75	6	3	8	4	3	5
91.75	7	3	10	4	3	5
95.75	7	3	10	4	3	5
35.50 x 79.75	6	3	8	4	3	5
83.75	6	3	8	4	3	5
87.75	6	3	8	4	3	5
91.75	7	3	10	4	3	5
95.75	7	3	10	4	3	5
37.50 x 79.75	6	3	8	4	3	5
83.75	6	3	8	4	3	5
87.75	7	3	10	4	3	5
91.75	7	3	10	4	3	5
95.75	7	3	10	4	3	5

TABLE 4. XX DOORS (ALSO X DOOR OF XO & OX)

GLASS TYPES ANCHOR TYPE & SUBSTRATE	A, B, C, D					
	2,3, WOOD			1,2, CONC		
DOOR WIDTHS "XX" - 47.75 TO 71.75	LOAD ZONES					
WIDTH x HT.	XX - JAMB "A"	XX - HEAD/SILL "D" (USE ALSO W/ TABLE 6.)	XX - HEAD/SILL "F" (USE W / TABLE 7.)	XX - JAMB "A"	XX - HEAD/SILL "D" (USE ALSO W/ TABLE 6.)	XX - HEAD/SILL "F" (USE W / TABLE 7.)
47.75 x 79.75	4	3	6	4	2	3
83.75	5	4	7	4	2	3
87.75	5	4	7	4	2	3
91.75	5	4	7	4	2	3
95.75	5	4	7	4	2	3
51.75 x 79.75	5	4	7	4	2	3
83.75	5	4	7	4	2	3
87.75	5	4	7	4	2	3
91.75	5	4	7	4	2	3
95.75	6	4	7	4	3	5
55.75 x 79.75	5	4	7	4	2	3
83.75	5	4	7	4	2	3
87.75	5	4	7	4	2	3
91.75	6	4	7	4	3	5
95.75	6	4	8	4	3	5
59.75 x 79.75	5	5	8	4	2	3
83.75	5	5	8	4	2	3
87.75	6	5	8	4	3	5
91.75	6	5	8	4	3	5
95.75	6	5	8	4	3	5
63.75 x 79.75	5	5	8	4	2	3
83.75	6	5	8	4	3	5
87.75	6	5	8	4	3	5
91.75	6	5	8	4	3	5
95.75	7	6	10	4	3	5
67.75 x 79.75	6	5	8	4	3	5
83.75	6	5	8	4	3	5
87.75	6	5	8	4	3	5
91.75	7	6	10	4	3	5
95.75	7	6	10	4	3	5
71.75 x 79.75	6	5	8	4	3	5
83.75	6	5	9	4	3	5
87.75	6	5	9	4	3	5
91.75	7	6	10	4	3	5
95.75	7	6	10	4	3	5

TABLE 5. O SIDE LITE

GLASS TYPES ANCHOR TYPE & SUBSTRATE	A, B, C, D			
	2,3, WOOD		1,2, CONC	
WIDTHS "O" - 10.75 TO 36.75	LOAD ZONES			
WIDTH x HT.	O - JAMB "B"	O - HEAD/SILL "E"	O - JAMB "B"	O - HEAD/SILL "E"
10.75 x 79.75	4	1	4	1
83.75	4	1	4	1
87.75	4	1	4	1
91.75	4	1	4	1
95.75	4	1	4	1
12.75 x 79.75	4	2	4	2
83.75	4	2	4	2
87.75	4	2	4	2
91.75	4	2	4	2
95.75	4	2	4	2
19.00 x 79.75	4	2	4	2
83.75	4	2	4	2
87.75	4	2	4	2
91.75	4	2	4	2
95.75	4	2	4	2
21.75 x 79.75	4	2	4	2
83.75	4	2	4	2
87.75	4	2	4	2
91.75	5	2	4	2
95.75	5	2	4	2
27.75 x 79.75	5	2	4	2
83.75	5	2	4	2
87.75	5	2	4	2
91.75	6	2	4	2
95.75	6	2	4	2
36.13 x 79.75	6	3	4	3
83.75	6	3	4	3
87.75	7	3	4	3
91.75	7	3	4	3
95.75	7	3	4	3
36.75 x 79.75	6	3	4	3
83.75	6	3	4	3
87.75	7	3	4	3
91.75	7	3	4	3
95.75	7	3	4	3

TABLE 6. XO & OX

GLASS TYPES ANCHOR TYPE & SUBSTRATE	A, B, C, D							
	2,3, WOOD				1,2, CONC			
DOOR WIDTHS "X" - 25.50 TO 37.50	LOAD ZONES							
SIDE LITE WIDTH x HT.	O - JAMB "B"	O - HEAD/SILL "E"	X - HEAD/SILL "D"	X - JAMB "A"	O - JAMB "B"	O - HEAD/SILL "E"	X - HEAD/SILL "D"	X - JAMB "A"
10.75 x 79.75	4	2	USE JAMB ANCHOR FROM TABLE 3. AND SAME LINE HEAD QUANTITIES FROM TABLE 4. FOR DOOR WIDTH		4	2	USE JAMB ANCHOR FROM TABLE 3. AND SAME LINE HEAD QUANTITIES FROM TABLE 4. FOR DOOR WIDTH	
83.75	4	2			4	2		
87.75	4	2			4	2		
91.75	4	2			4	2		
95.75	4	2			4	2		
12.75 x 79.75	4	2			4	2		
83.75	4	2			4	2		
87.75	4	2			4	2		
91.75	4	2			4	2		
95.75	4	2			4	2		
19.00 x 79.75	4	3			4	2		
83.75	4	3			4	2		
87.75	4	3			4	2		
91.75	4	3			4	2		
95.75	4	3			4	2		
21.75 x 79.75	4	3			4	2		
83.75	4	3			4	2		
87.75	4	3			4	2		
91.75	5	3			4	2		
95.75	5	3			4	2		
27.75 x 79.75	5	3			4	2		
83.75	5	3			4	2		
87.75	5	3			4	2		
91.75	6	3			4	3		
95.75	6	3			4	3		
36.13 x 79.75	6	4			4	3		
83.75	6	4			4	3		
87.75	7	5			4	3		
91.75	7	5			4	3		
95.75	7	5			4	3		
36.75 x 79.75	6	4			4	3		
83.75	6	4			4	3		
87.75	7	5			4	3		
91.75	7	5			4	3		
95.75	7	5			4	3		

TABLE 7. OXO, XXO, OXX & OXXO

GLASS TYPES ANCHOR TYPE & SUBSTRATE	A, B, C, D					
	2,3, WOOD			1,2, CONC		
DOOR WIDTHS "X" - 25.50 TO 37.50 "XX" - 47.75 TO 71.75	LOAD ZONES					
SIDE LITE WIDTH x HT.	O - JAMB "B"	O - HEAD/SILL "E"	X,XX - HEAD/SILL "F"	O - JAMB "B"	O - HEAD/SILL "E"	X,XX - HEAD/SILL "F"
10.75 x 79.75	4	2	USE ANCHOR QUANTITIES FROM TABLE 3. OR 4. FOR EACH ZONE OF APPLICABLE DOOR WIDTH	4	2	USE ANCHOR QUANTITIES FROM TABLE 3. OR 4. FOR EACH ZONE OF APPLICABLE DOOR WIDTH
83.75	4	2		4	2	
87.75	4	2		4	2	
91.75	4	2		4	2	
95.75	4	2		4	2	
12.75 x 79.75	4	2		4	2	
83.75	4	2		4	2	
87.75	4	2		4	2	
91.75	4	2		4	2	
95.75	4	2		4	2	
19.00 x 79.75	4	3		4	2	
83.75	4	3		4	2	
87.75	4	3		4	2	
91.75	4	3		4	2	
95.75	4	3		4	2	
21.75 x 79.75	4	3		4	2	
83.75	4	3		4	2	
87.75	4	3		4	2	
91.75	5	3		4	2	
95.75	5	3		4	2	
27.75 x 79.75	5	3		4	2	
83.75	5	3		4	2	
87.75	5	3		4	2	
91.75	6	3		4	3	
95.75	6	3		4	3	
36.13 x 79.75	6	4		4	3	
83.75	6	4		4	3	
87.75	7	5		4	3	
91.75	7	5		4	3	
95.75	7	5		4	3	
36.75 x 79.75	6	4		4	3	
83.75	6	4		4	3	
87.75	7	5		4	3	
91.75	7	5		4	3	
95.75	7	5		4	3	

APPROVED ANCHOR TYPES:

1. 1/4" ELCO TAPCONS
2. 1/4" ELCO SS4 CRETE-FLEX MASONRY ANCHORS
3. #12 SCREWS (G5)
4. ENCIRCLED ANCHOR QUANTITIES IN TABLES 4 AND 7 PERTAIN TO THE EXAMPLE ANCHORAGE SOLUTION ON SHEET 8.

PRODUCT REVISED
as complying with the Florida Building Code
Acceptance No. 11-1013.22
Expiration Date OCT 18, 2012
By Ishay I. Chayat
Miami-Dade Product Control

ANTHONY LYNN MILLER
LICENSE
No. 58705
10/11/11
STATE OF FLORIDA
PROFESSIONAL ENGINEER
A. LYNN MILLER, P.E.
FL P.E.# 58705

Revsd By:	Date:	Revisions:	
J.J.	10/10/11	C	NO CHANGE THIS SHEET
F.K.	9/18/07	B	NO CHANGE THIS SHEET.
F.K.	8/14/07	A	ADD "ALSO USE W/ TABLE 6 TO TABLE 4., "D". CHANGE TABLE 6., HEAD ZONE "C" TO "D" AND COLUMN REFERENCE. ADD "G5" TO ANCHOR TYPE 3.
Drawn By: F.K.	Date: 2/22/07	Checked By: J.J.	Date: 6/21/07

1070 TECHNOLOGY DRIVE
NOKOMIS, FL 34275

P.O. BOX 1529
NOKOMIS, FL 34274

PGT Visibly Better

Description: ANCHOR QUANTITY LOAD ZONE TABLES

Title: ALUM. FRENCH DOOR & SIDE LITES, IMPACT

Series/Model:	Scale:	Sheet:	Drawing No.	Rev:
FD101	NA	9 of 10	11005-1	C

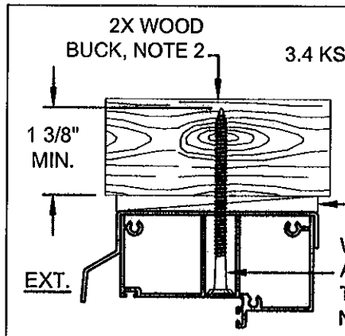

DOOR HEAD (WOOD)

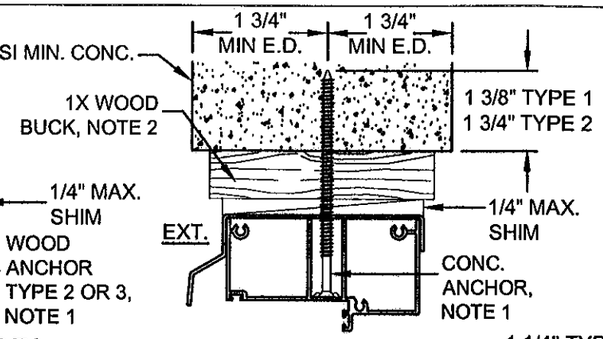

DOOR HEAD (CONC)

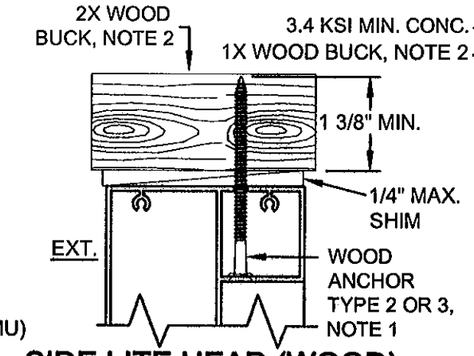

SIDE LITE HEAD (WOOD)

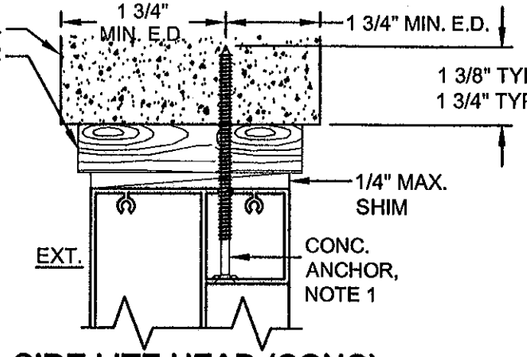

SIDE LITE HEAD (CONC)

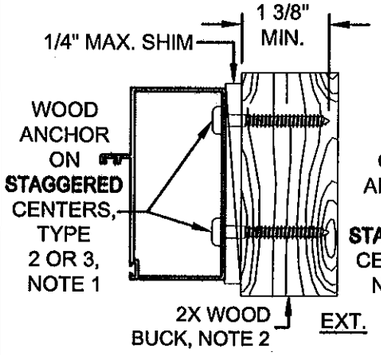

DOOR JAMB (WOOD)

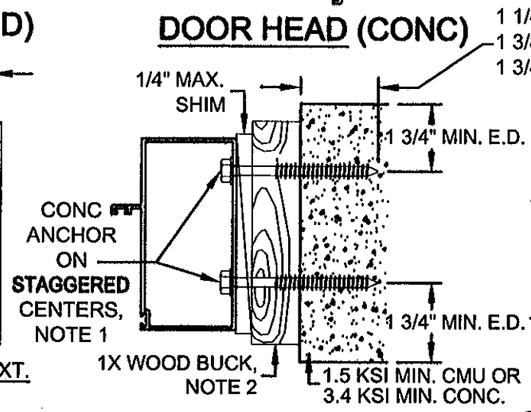

DOOR JAMB (CONC)

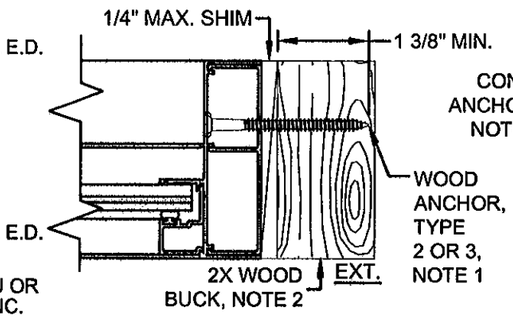

SIDE LITE JAMB (WOOD)

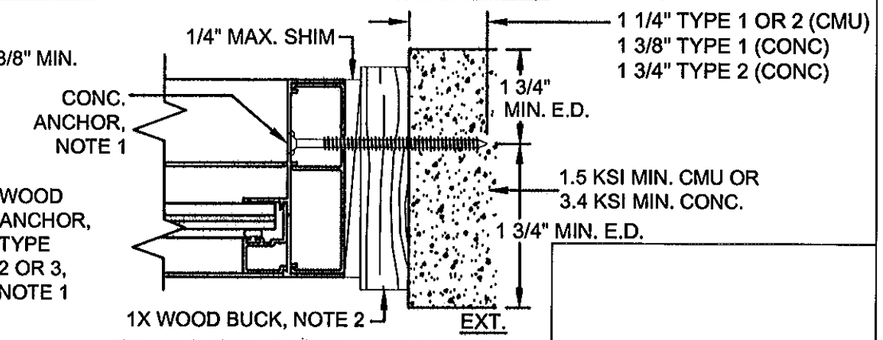

SIDE LITE JAMB (CONC)

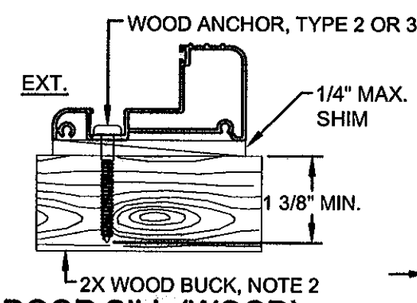

DOOR SILL (WOOD)

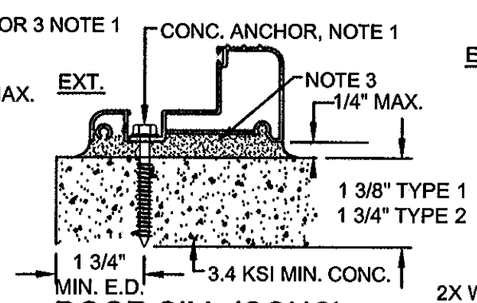

DOOR SILL (CONC)

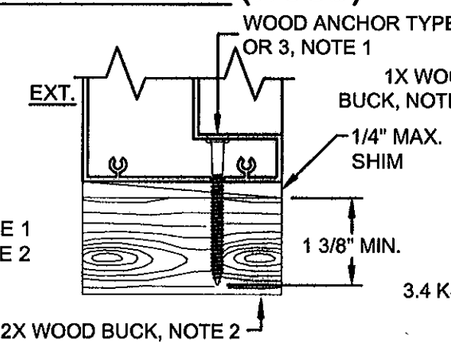

SIDE LITE SILL (WOOD)

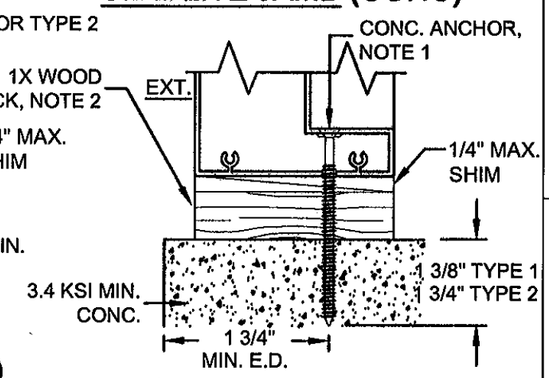

SIDE LITE SILL (CONC)

NOTES:

1. FOR CONCRETE INSTALLATIONS IN MIAMI-DADE COUNTY, USE ONLY MIAMI-DADE COUNTY APPROVED ELCO 1/4" TAPCONS EMBEDDED 1 3/8" MIN. (TYPE 1) OR 1/4" SS4 CRETE-FLEX EMBEDDED 1 3/4" MIN. (TYPE 2). THE MINIMUM DISTANCE FROM CENTER OF ANCHOR TO CONCRETE EDGE IS 1 3/4". FOR WOOD INSTALLATIONS USE #12 SCREWS, G5 (TYPE 3) OR ELCO 1/4" SS4 CRETE-FLEX ANCHORS EMBEDDED 1 3/8" MIN. (TYPE 2).
2. WOOD BUCKS DEPICTED AS 1x ARE LESS THAN 1 1/2" THICK. 1x WOOD BUCKS ARE OPTIONAL IF UNIT IS INSTALLED DIRECTLY TO SOLID CONCRETE. WOOD BUCKS DEPICTED AS 2x ARE 1 1/2" THICK OR GREATER. INSTALLATION TO THE SUBSTRATE OF WOOD BUCKS TO BE ENGINEERED BY OTHERS OR AS APPROVED BY THE AUTHORITY HAVING JURISDICTION (AHJ).
3. IF SILL IS TIGHT TO SUBSTRATE, GROUT OR OTHER MATERIAL IS NOT REQUIRED. IF USED, NON-SHRINK, NON-METALLIC GROUT (3400 PSI MIN.), (DONE BY OTHERS) MUST FULLY SUPPORT THE ENTIRE LENGTH OF THE SILL THAT IS NOT TIGHT TO THE SUBSTRATE, AND TRANSFER SHEAR LOAD TO SUBSTRATE. IF SUBSTRATE IS WOOD, 30# FELT PAPER OR MASTIC IS REQUIRED BETWEEN THE GROUT AND WOOD SUBSTRATE, OR AS APPROVED BY THE AUTHORITY HAVING JURISDICTION.

Revsd By:	Date:	Revisions:	
J.J.	10/10/11	C	NO CHANGE THIS SHEET
F.K.	8/18/07	B	NO CHANGE THIS SHEET.
F.K.	8/14/07	A	SPEC. TYPE 1 & 2 EMBED. ON CONC. DETAILS. SPEC. TYPE 2 & 3 ON WOOD DETAILS. ADD ANCHOR TYPES TO NOTE 1.
Drawn By: F.K.	Date: 2/22/07	Checked By: J.J.	Date: 6/21/07

1070 TECHNOLOGY DRIVE
NOKOMIS, FL 34275
P.O. BOX 1529
NOKOMIS, FL 34274

PGT Visibly Better

Description: ANCHORAGE DETAILS

Title: ALUM. FRENCH DOOR & SIDE LITES, IMPACT

Series/Model:	Scale:	Sheet:	Drawing No.	Rev:
FD101	NTS	10 of 10	11005-1	C

PRODUCT REVISED
as complying with the Florida Building Code
Acceptance No. 11-1013.22
Expiration Date: OCT 18, 2012
By: Ishaq J. Chanek
Miami Dade Product Control

ANTHONY LYNN MILLER
LICENSE
No. 58705
10/11/11
STATE OF FLORIDA
PROFESSIONAL ENGINEER

A. LYNN MILLER, P.E.
FL P.E.# 58705