MIAMI-DADE COUNTY
DEPARTMENT OF PERMITTING, ENVIRONMENT, AND REGULATORY AFFAIRS (PERA)
BOARD AND CODE ADMINISTRATION DIVISION

NOTICE OF ACCEPTANCE (NOA)

MIAMI-DADE COUNTY
PRODUCT CONTROL SECTION
11805 SW 26 Street, Room 208
Miami, Florida 33175-2474
T (786) 315-2590 F (786) 315-2599
www.miamidade.gov/pera/

PGT Industries
1070 Technology Drive,
Nokomis, Fl. 34275

SCOPE:
This NOA is being issued under the applicable rules and regulations governing the use of construction materials. The documentation submitted has been reviewed and accepted by Miami-Dade County PERA - Product Control Section to be used in Miami Dade County and other areas where allowed by the Authority Having Jurisdiction (AHJ).
This NOA shall not be valid after the expiration date stated below. The Miami-Dade County Product Control Section (In Miami Dade County) and/or the AHJ (in areas other than Miami Dade County) reserve the right to have this product or material tested for quality assurance purposes. If this product or material fails to perform in the accepted manner, the manufacturer will incur the expense of such testing and the AHJ may immediately revoke, modify, or suspend the use of such product or material within their jurisdiction. PERA reserves the right to revoke this acceptance, if it is determined by Miami-Dade County Product Control Section that this product or material fails to meet the requirements of the applicable building code. This product is approved as described herein, and has been designed to comply with the Florida Building Code, including the High Velocity Hurricane Zone.

DESCRIPTION: Series "FD-750" Outswing Aluminum French Door w/Sidelites – L.M.I.

APPROVAL DOCUMENT: Drawing No. **8000-11**, titled "Alum. French Door & Side Lites, Impact", sheets 1 through 12 of 12, dated 12/23/04, with revision **E** dated 10/12/11,prepared by manufacturer, signed and sealed by Anthony Lynn Miller, P.E., bearing the Miami-Dade County Product Control Revision stamp with the Notice of Acceptance number and expiration date by the Miami-Dade County Product Control Section.

MISSILE IMPACT RATING: Large and Small Missile Impact Resistant

LABELING: Each unit shall bear a permanent label with the manufacturer's name or logo, city, state, model/series, and following statement: "Miami-Dade County Product Control Approved", unless otherwise noted herein.

RENEWAL of this NOA shall be considered after a renewal application has been filed and there has been no change in the applicable building code negatively affecting the performance of this product.

TERMINATION of this NOA will occur after the expiration date or if there has been a revision or change in the materials, use, and/or manufacture of the product or process. Misuse of this NOA as an endorsement of any product, for sales, advertising or any other purposes shall automatically terminate this NOA. Failure to comply with any section of this NOA shall be cause for termination and removal of NOA.

ADVERTISEMENT: The NOA number preceded by the words Miami-Dade County, Florida, and followed by the expiration date may be displayed in advertising literature. If any portion of the NOA is displayed, then it shall be done in its entirety.

INSPECTION: A copy of this entire NOA shall be provided to the user by the manufacturer or its distributors and shall be available for inspection at the job site at the request of the Building Official.
This NOA **revises NOA # 09-1028.10** and consists of this page 1 and evidence pages E-1, E-2, and E-3, as well as approval document mentioned above.
The submitted documentation was reviewed by **Manuel Perez, P.E.**

MIAMI-DADE COUNTY APPROVED

PGT Industries

NOTICE OF ACCEPTANCE: EVIDENCE SUBMITTED

A. DRAWINGS

1. Manufacturer's die drawings and sections
2. Drawing No. **8000-11**, titled "Alum. French Door & Side Lites, Impact", sheets 1 through 12 of 12, dated 12/23/04, with revision **E** dated 10/12/11, prepared by manufacturer, signed and sealed by Anthony Lynn Miller, P.E.

B. TESTS

1. Test reports on: 1) Air Infiltration Test,
   2) Uniform Static Air Pressure Test,
   3) Water Resistance Test,
   4) Forced Entry Test, per SFBC 3603.2 (b)

   along with marked-up drawings and installation diagram of an aluminum sliding glass door using a low sill threshold, glazed with 7/16" laminated glass, prepared by Fenestration Testing Laboratory, Inc., Test Report No. **FTL-5941**, dated 05/20/09, signed and sealed by Julio E. Gonzalez, P.E.
   (Submitted under NOA # 09-1028.10)
2. Test reports on: 1) Air Infiltration Test, per FBC, TAS 202-94
   2) Uniform Static Air Pressure Test, Loading per FBC TAS 202-94
   3) Water Resistance Test, per FBC, TAS 202-94
   4) Large Missile Impact Test per FBC, TAS 201-94,
   5) Cyclic Wind Pressure Loading per FBC, TAS 203-94
   6) Forced Entry Test, Per FBC 2411 3.2.1 and TAS 202-94

   along with marked-up drawings and installation diagram of aluminum doors of OXXO configuration, prepared by Fenestration Testing Laboratory, Inc., Test Report No.
   (Submitted under NOA # 09-1028.10)
3. Test reports on: 1) Uniform Static Air Pressure Test, per FBC, TAS 202-94
   2) Large Missile Impact Test per FBC, TAS 201-94
   3) Cyclic Wind Pressure Loading per FBC, TAS 203-94
   4) Forced Entry Test, per FBC 2411 3.2.1 and TAS 202-94

   along with marked-up drawings and installation diagram of aluminum doors of OXXX configuration, prepared by Fenestration Testing Laboratory, Test Reports No. **FTL-4527,** dated 02/10/05, signed and sealed by Edmundo Largaespada, P. E.
   (Submitted under NOA # 05-0419.03)
4. Test reports on: 1) Air Infiltration Test, per FBC, TAS 202-94
   2) Uniform Static Air Pressure Test, per FBC, TAS 202-94
   3) Water Resistance Test, per FBC, TAS 202-94
   4) Forced Entry Test, per FBC 2411 3.2.1 and TAS 202-94

   along with marked-up drawings and installation diagram of aluminum doors of OXXO configuration, prepared by Fenestration Testing Laboratory, Test Reports No. **FTL-4528,** dated 02/14/05, signed and sealed by Edmundo Largaespada, P. E.
   (Submitted under NOA # 05-0419.03)

Manuel Perez, P.E.
Product Control Examiner
NOA No 11-1013.24
Expiration Date: February 24, 2015
Approval Date: November 24, 2011

NOTICE OF ACCEPTANCE: EVIDENCE SUBMITTED

B. TESTS (CONTINUED)

5. Test reports on: 1) Large Missile Impact Test per FBC, TAS 201-94
2) Cyclic Wind Pressure Loading per FBC, TAS 203-94
along with marked-up drawings and installation diagram of aluminum doors of XXXO configuration, prepared by Fenestration Testing Laboratory, Test Reports No. **FTL-4529,** dated 02/14/05, signed and sealed by Edmundo Largaespada, P. E. ***(Submitted under NOA # 05-0419.03)***

6. Test reports on: 1) Large Missile Impact Test per FBC, TAS 201-94
2) Cyclic Wind Pressure Loading per FBC, TAS 203-94
along with marked-up drawings and installation diagram of aluminum outswing French door, prepared by Fenestration Testing Laboratory, Test Reports No. **FTL-4530,** dated 02/14/05, signed and sealed by Edmundo Largaespada, P. E. ***(Submitted under NOA # 05-0419.03)***

7. Test reports on: 1) Large Missile Impact Test per FBC, TAS 201-94
2) Cyclic Wind Pressure Loading per FBC, TAS 203-94
along with marked-up drawings and installation diagram of aluminum outswing French door, prepared by Fenestration Testing Laboratory, Test Reports No. **FTL-4311,** dated 09/01/04, signed and sealed by Edmundo Largaespada, P. E. ***(Submitted under NOA # 05-0103.03)***

8. Test reports on: 1) Uniform Static Air Pressure Test, per FBC, TAS 202-94
2) Large Missile Impact Test per FBC, TAS 201-94
3) Cyclic Wind Pressure Loading per FBC, TAS 203-94
along with marked-up drawings and installation diagram of aluminum outswing French door, prepared by Fenestration Testing Laboratory, Test Reports No. **FTL-4312,** dated 09/13/04, signed and sealed by Edmundo Largaespada, P. E. ***(Submitted under NOA # 05-0103.03)***

9. Test reports on: 1) Air Infiltration Test, per FBC, TAS 202-94
2) Uniform Static Air Pressure Test, per FBC, TAS 202-94
3) Water Resistance Test, per FBC, TAS 202-94
4) Forced Entry Test, per FBC 2411 3.2.1 and TAS 202-94
along with marked-up drawings and installation diagram of aluminum outswing French door, prepared by Fenestration Testing Laboratory, Test Reports No. **FTL-4315,** dated 09/13/04, signed and sealed by Edmundo Largaespada, P. E. ***(Submitted under NOA # 05-0103.03)***

Manuel Perez, P.E.
Product Control Examiner
NOA No 11-1013.24
Expiration Date: February 24, 2015
Approval Date: November 24, 2011

NOTICE OF ACCEPTANCE: EVIDENCE SUBMITTED

C. CALCULATIONS

1. Anchor verification calculations and structural analysis, complying with FBC-2007, dated 10/01/09, prepared, signed and sealed by Robert L. Clark, P.E, updated to the FBC-2010 on 10/11/11, signed and sealed by A. Lynn Miller, P.E.
2. Glazing complies with ASTM E1300-04

D. QUALITY ASSURANCE

1. Miami Dade Department of Permitting, Environment, and Regulatory Affairs (PERA).

E. MATERIAL CERTIFICATIONS

1. Notice of Acceptance No. **10–0922.09** issued to **E.I. DuPont DeNemours & Co.**, Inc. for their "**DuPont Butacite® PVB, Interlayer**" dated 12/24/10, expiring on 12/11/11.
2. Notice of Acceptance No. **09-0223.05** issued to **Solutia, Inc.** for their "**Saflex Multi-layer Glass Interlayer**" dated 04/08/09, expiring on 04/08/14.
3. Notice of Acceptance No. **08-1224.04** issued to Solutia, Inc. for their "**Saflex Composites Glass Interlayer with PET Core**" dated 02/25/09, expiring on 12/11/13.

F. STATEMENTS

1. Statement letter dated 10/07/11, Successor Engineer adopting the another engineer's work per FAR 61G15-27-001, signed & sealed by A. Lynn Miller, P.E.
2. Statement letter of conformance with the FBC-2007 and FBC-2010, prepared by manufacturer, dated 10/11/11, signed & sealed by A. Lynn Miller, P.E.
3. Statement letter of "No financial interest", prepared by manufacturer, dated 10/11/11, signed & sealed by A. Lynn Miller, P.E.
4. Letter of lab compliance, part of the above test reports.
5. Proposal No. **08-1891** issued by BCCO, dated January 26, 2009, signed by Ishaq Chanda, P.E.

G. OTHER

1. Notice of Acceptance No. **09-1028.10**, issued to PGT Industries for their Series "FD-750" Outswing Aluminum French Door w/Sidelites – L.M.I., approved on 02/10/10 and expiring on 02/24/15.

Manuel Perez, P.E.
Product Control Examiner
NOA No 11-1013.24
Expiration Date: February 24, 2015
Approval Date: November 24, 2011

NOTES: OUTSWING IMPACT FRENCH DOOR(S) AND SIDE LITE(S)

1. GLAZING OPTIONS:
   A. 7/16" LAMI CONSISTING OF (1) LITE OF 3/16" ANNEALED GLASS AND (1) LITE OF 3/16" HEAT STRENGTHENED GLASS WITH AN .090 PVB INTERLAYER OF DUPONT BUTACITE OR SAFLEX/KEEPSAFE MAXIMUM.

   B. 7/16" LAMI CONSISTING OF (2) LITES OF 3/16" HEAT STRENGTHENED GLASS WITH AN .090 PVB INTERLAYER OF DUPONT BUTACITE OR SAFLEX/KEEPSAFE MAXIMUM.

   C. 7/16" LAMI CONSISTING OF (1) LITE OF 3/16" ANNEALED GLASS AND (1) LITE OF 3/16" HEAT STRENGTHENED GLASS WITH AN .075 VANCEVA INTERLAYER.

   D. 7/16" LAMI CONSISTING OF (2) LITES OF 3/16" HEAT STRENGTHENED GLASS WITH AN .075 VANCEVA INTERLAYER.

   E. 7/8" LAMI I.G. CONSISTING OF (1) LITE OF 3/16" TEMPERED GLASS OUTSIDE, 1/4" AIR SPACE AND (1) 7/16" LAMI GLASS ASSEMBLY INSIDE (3/16" A,.090 PVB, 3/16" HS).

   F. 7/8" LAMI I.G. CONSISTING OF (1) LITE OF 3/16" TEMPERED GLASS OUTSIDE, 1/4" AIR SPACE AND (1) 7/16" LAMI GLASS ASSEMBLY INSIDE (3/16" HS,.090 PVB, 3/16" HS).

   G. 7/8" LAMI I.G. CONSISTING OF (1) LITE OF 3/16" TEMPERED GLASS OUTSIDE, 1/4" AIR SPACE AND (1) 7/16" LAMI GLASS ASSEMBLY INSIDE (3/16" A,.075 VANCEVA, 3/16" HS).

   H. 7/8" LAMI I.G. CONSISTING OF (1) LITE OF 3/16" TEMPERED GLASS OUTSIDE, 1/4" AIR SPACE AND (1) 7/16" LAMI GLASS ASSEMBLY INSIDE (3/16" HS,.075 VANCEVA, 3/16" HS).

2. DESIGN PRESSURES: TABLE 1, SHEET 3.
   A. NEGATIVE DESIGN LOADS BASED ON TESTED PRESSURE AND GLASS TABLES ASTM E1300-02.
   B. POSITIVE DESIGN LOADS BASED ON WATER TEST PRESSURE AND GLASS TABLES ASTM E1300-02.

3. CONFIGURATIONS: X, O, XX, XO, OX, XXX, XXO, OXX, OXO, XXXX, XXXO, OXXX, OR OXXO WHERE O REPRESENTS EITHER THE NARROW JAMB OR FULL JAMB SIDE LITE. ANY TWO ADJACENT X UNITS CAN BE EITHER TWO SINGLE, X DOORS OR A DOUBLE, XX DOOR' BOTH USING EITHER THE STANDARD OR THE LOW-RISE SILL. THE FRENCH DOOR ASSEMBLY BEAM IS USED TO ASSEMBLE X, XX, AND O UNITS TO MAKE THE ABOVE CONFIGURATIONS.

4. ANCHORAGE: THE 33 1/3% STRESS INCREASE HAS NOT BEEN USED IN THE DESIGN OF THIS PRODUCT. FOR ANCHORAGE REQUIREMENTS SEE SHEETS 9 THRU 11.

5. SHUTTERS ARE NOT REQUIRED.

6. SEALANT: INSTALLATION SCREWS, FRAME AND PANEL CORNERS SEALED WITH CLEAR COLORED SEALANT. VERTICAL ASSEMBLY BEAM SEAMS SEALED ON THE INTERIOR AND EXTERIOR WITH CONTRACTOR'S SEALANT.

7. REFERENCES: TEST REPORTS: FTL-4311, FTL-4312, FTL-4315, FTL-4527, FTL-4528, FTL-4529, FTL-4530, FTL-4921 AND FTL-5941.
   ANSI/AF&PA NDS-2005 FOR WOOD CONSTRUCTION
   ADM-2005 ALUMINUM DESIGN MANUAL

8. THIS PRODUCT HAS BEEN DESIGNED & TESTED TO COMPLY WITH THE REQUIREMENTS OF THE FLORIDA BUILDING CODE, INCLUDING THE HIGH VELOCITY HURRICANE ZONE (HVHZ).

NOA DRAWING MAP

TOPIC	SHEET
GENERAL NOTES	1
CONFIGURATIONS	1
GLAZING DETAILS	2
DESIGN PRESSURES	3
ELEVATIONS	4
VERT. SECTIONS	5
HORIZ. SECTIONS	6
PARTS LIST	7
EXTRUSIONS	8-9
ANCHORAGE	10-12

PRODUCT REVISED
in complying with the Florida
Building Code
Acceptance No. 11-1013.24
Registration Date FEB. 24, 2015
Florida Product Control

ANTHONY LYNN MILLER
LICENSE
No. 58705
10/11/11
STATE OF FLORIDA
PROFESSIONAL ENGINEER
A. LYNN MILLER, P.E.
FL P.E.# 58705

Revsd By:	Date:	Revisions:	
J.R.	09/22/09	C	UPDATED BUILDING CODE AND DESIGN MANUAL YEARS. ADDED TEST REPORT NUMBERS.
J.R.	01/25/10	D	NO CHANGES THIS SHEET
J.J.	10/12/11	E	FBC 2010 CODE CHANGE
Drawn By: F.K.	Date: 12/23/04	Checked By: L.T.	Date: 4/8/05

1070 TECHNOLOGY DRIVE
NOKOMIS, FL 34275

P.O. BOX 1529
NOKOMIS, FL 34274

PGT®

Description: GENERAL NOTES AND DRAWING MAP

Title: ALUM. FRENCH DOOR & SIDE LITES, IMPACT

Series/Model:	Scale:	Sheet:	Drawing No.	Rev:
FD750	FULL	1 of 12	8000-11	E

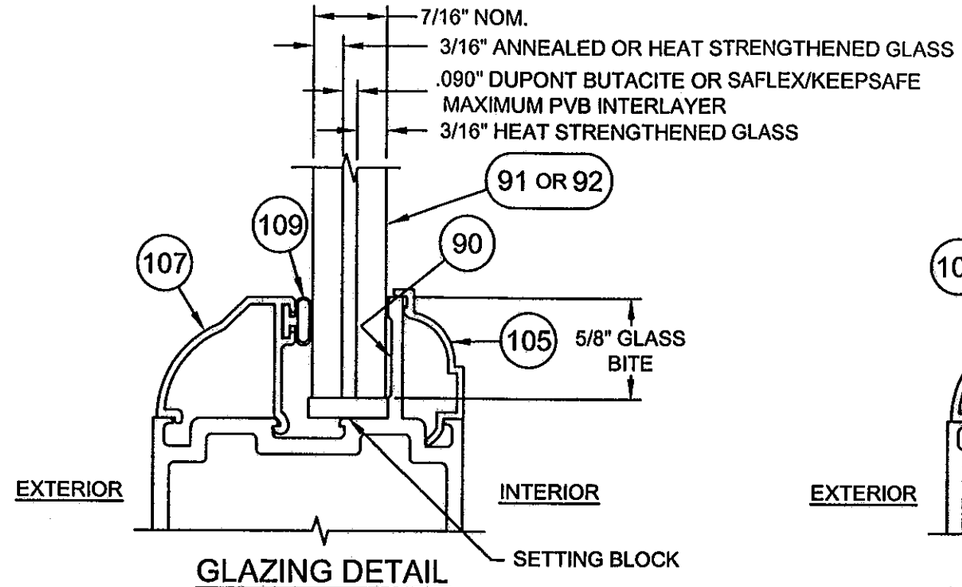

GLAZING DETAIL
7/16" LAMI GLASS W/ PVB INTERLAYER

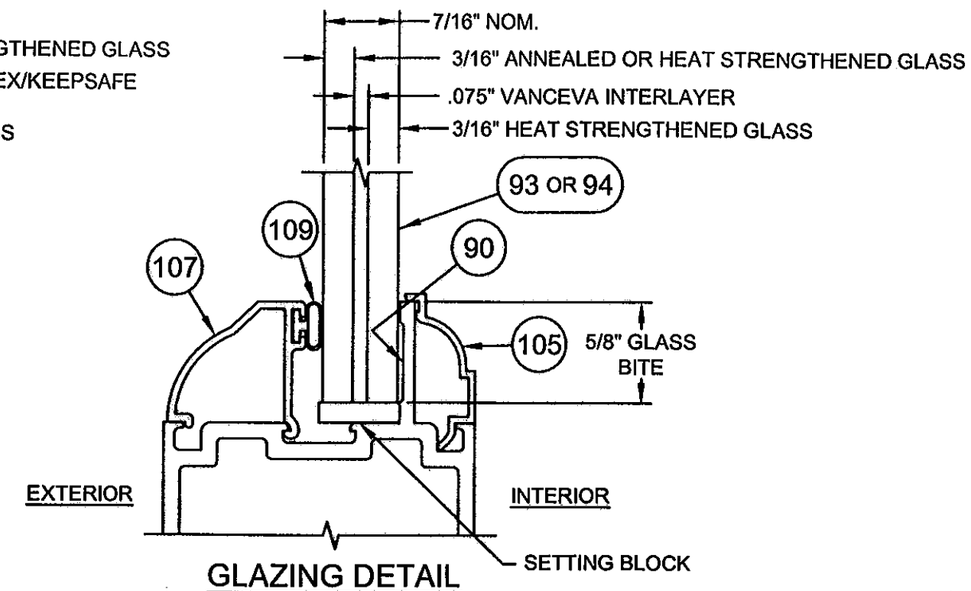

GLAZING DETAIL
7/16" LAMI GLASS W/ VANCEVA INTERLAYER

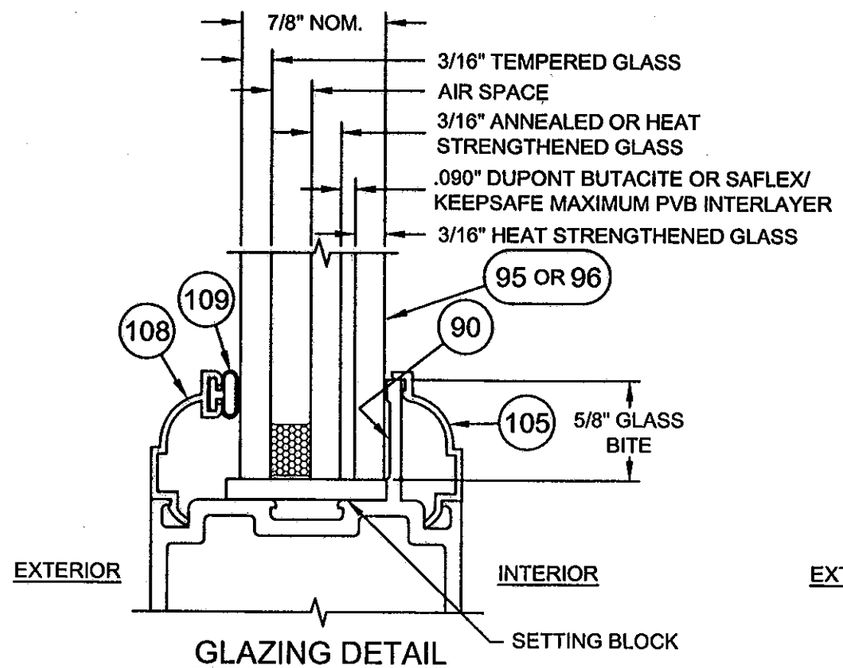

GLAZING DETAIL
7/8" LAMI I.G. GLASS W/ PVB INTERLAYER

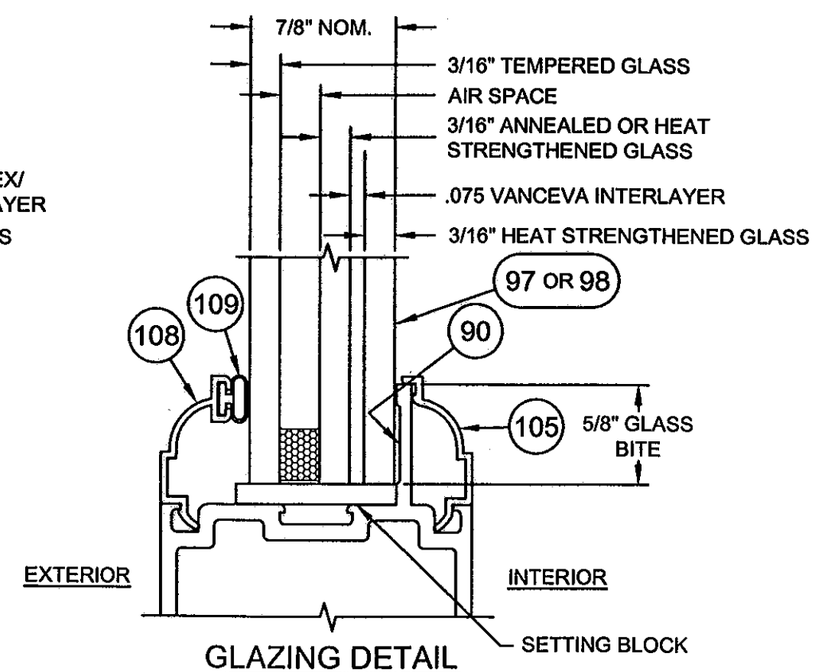

GLAZING DETAIL
7/8" LAMI I.G. GLASS W/ VANCEVA INTERLAYER

PRODUCT REVISED
as complying with the Florida
Building Code
Acceptance No 11-1013.24
Expiration Date FEB. 24, 2015
By [signature]
Miami Dade Product Control

Revsd By:	Date:	Revisions:	
F.K.	10/12/06	B	NO CHANGE THIS SHEET
J.R.	09/22/09	C	NO CHANGE THIS SHEET
J.R.	01/25/10	D	NO CHANGES THIS SHEET
Drawn By: F.K.	Date: 12/23/04	Checked By: L.T.	Date: 4/8/05

1070 TECHNOLOGY DRIVE
NOKOMIS, FL 34275

P.O. BOX 1529
NOKOMIS, FL 34274

PGT®

Description: GLAZING DETAILS

Title: ALUM. FRENCH DOOR & SIDE LITES, IMPACT

Series/Model:	Scale:	Sheet:	Drawing No.	Rev:
FD750	FULL	2 of 12	8000-11	E

ANTHONY LYNN MILLER
LICENSE
No. 58705
STATE OF FLORIDA
PROFESSIONAL ENGINEER

A. LYNN MILLER, P.E.
FL P.E.# 58705

Table 1. Maximum Design Pressures (psf)

Configuration		Width (in)	Allowed Glass Types	Height (in)									
				79 3/4" (6^8)		83 3/4" (7^0)		87 3/4"		91 3/4"		95 3/4" (8^0)	
French Door	X	37" (3^0)	A,E	+70.0	-80.0	+70.0	-80.0	+70.0	-80.0	+70.0	-80.0	+70.0	-80.0
			C,G	+100.0	-100.0	+100.0	-100.0	+100.0	-100.0	+100.0	-100.0	+100.0	-100.0
	XX	71 3/4" (6^0)	A,E	+70.0	-80.0	+70.0	-80.0	+70.0	-80.0	+70.0	-80.0	+70.0	-80.0
			C,G	+100.0	-100.0	+100.0	-100.0	+100.0	-100.0	+100.0	-100.0	+100.0	-100.0
Sidelite	Full Jamb	36 11/16"	A,E	+70.0	-80.0	+70.0	-80.0	+70.0	-80.0	+70.0	-80.0	+70.0	-80.0
			C,G	+100.0	-100.0	+100.0	-100.0	+100.0	-100.0	+100.0	-100.0	+100.0	-100.0
	Narrow Jamb	30 11/16"	C,G	+100.0	-100.0	+100.0	-100.0	+100.0	-100.0	+100.0	-100.0	+100.0	-100.0
		33 11/16"	C,G	+100.0	-100.0	+100.0	-100.0	+100.0	-100.0	+100.0	-100.0	+97.4	-97.4
		36 11/16"	A, B, E, F	+70.0	-80.0	+70.0	-80.0	+70.0	-80.0	+70.0	-80.0	+70.0	-80.0
			C,G	+100.0	-100.0	+99.9	-99.9	+95.3	-95.3	+91.4	-91.4	+87.9	-87.9
			D,H	+100.0	-100.0	+100.0	-100.0	+100.0	-100.0	+100.0	-100.0	+100.0	-100.0

Table 1a. Glass Type and Test Report Number

A - 7/16" LAMI (3/16"A,.090 PVB, 3/16"HS)	FTL-4311, 4312, 4315
B - 7/16" LAMI (3/16"HS,.090 PVB, 3/16"HS)	UPGRADE FTL-4311, 4312, 4315
C - 7/16" LAMI (3/16"A,.075 VANCEVA, 3/16"HS)	FTL-4527, 4528, 4529, 4530
D - 7/16" LAMI (3/16"HS,.075 VANCEVA, 3/16"HS)	UPGRADE FTL-4527, 4528, 4529, 4530
E - 7/8" LAMI I.G. (3/16"T, 1/4" AIR SPACE, 3/16"A,.090 PVB, 3/16"HS)	FTL-4311, 4312, 4315
F - 7/8" LAMI I.G. (3/16"T, 1/4" AIR SPACE, 3/16"HS,.090 PVB, 3/16"HS)	UPGRADE FTL-4311, 4312, 4315
G - 7/8" LAMI I.G. (3/16"T, 1/4" AIR SPACE, 3/16"A,.075 VANCEVA, 3/16"HS)	FTL-4527, 4528, 4529, 4530
H - 7/8" LAMI I.G. (3/16"T, 1/4" AIR SPACE, 3/16"HS,.075 VANCEVA, 3/16"HS)	UPGRADE FTL-4527, 4528, 4529, 4530

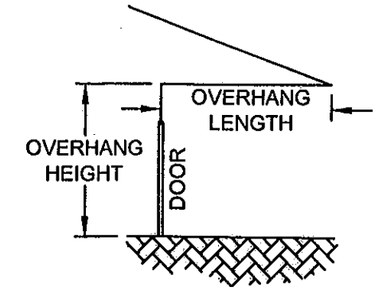

NOTES:
1. IF USING THE OPTIONAL LOW-RISE SILL (PART 10, SHEET 8 OF 12), THE OVERHANG HEIGHT MUST BE GREATER THAN THE OVERHANG LENGTH (SEE DIAGRAM). IF NOT, THE MAXIMUM POSITIVE (+) DESIGN PRESSURE IS LIMITED TO +50.0 PSF FOR ALL STYLES AND SIZES OF THE DOOR AND ANY ADJOINING SIDELITES. (REF. FTL-5941)

PRODUCT REVIEWED
as complying with the Florida
Building Code
Acceptance No. 11-1013.24
Expiration Date FEB. 24, 2015
Florida State Product Control

ANTHONY LYNN MILLER
LICENSE
No. 58705
10/11/11
STATE OF FLORIDA
PROFESSIONAL ENGINEER
A. LYNN MILLER, P.E.
FL P.E.# 58705

Revsd By:	Date:	Revisions:	
F.K.	10/12/06	B	UPDATE TABLE 1 TO ASTM E 1300-02
J.R.	09/22/09	C	ADDED NOTE/DIAGRAM FOR LOW RISE SILL
J.R.	01/25/10	D	NO CHANGES THIS SHEET
Drawn By: F.K.	Date: 12/23/04	Checked By: L.T.	Date: 4/8/05

1070 TECHNOLOGY DRIVE
NOKOMIS, FL 34275

P.O. BOX 1529
NOKOMIS, FL 34274

PGT®

Description: DESIGN PRESSURES

Title: ALUM. FRENCH DOOR & SIDE LITES, IMPACT

Series/Model:	Scale:	Sheet:	Drawing No.	Rev:
FD750	NTS	3 of 12	8000-11	E

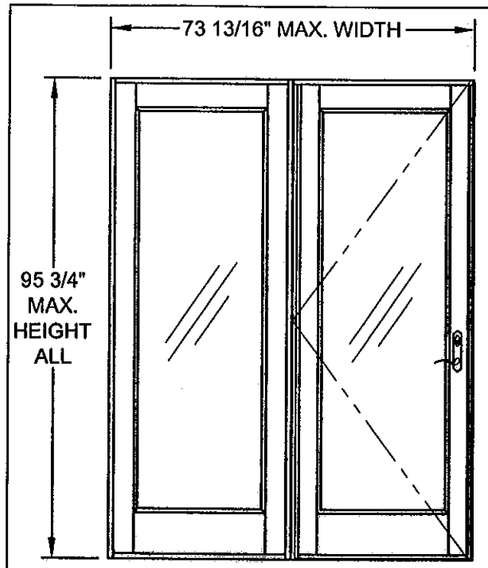

OX OR XO

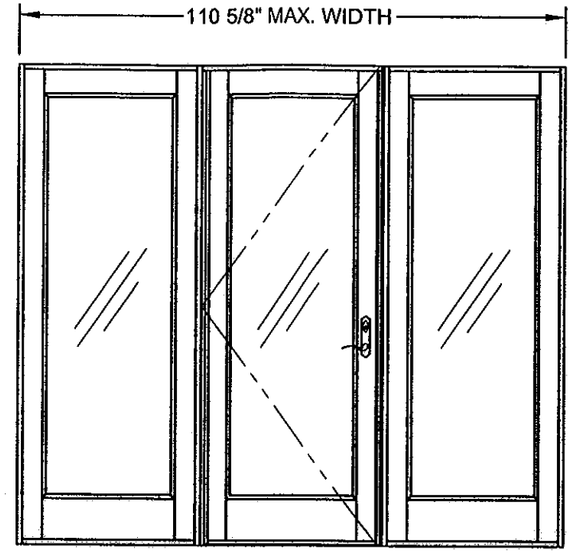

OXO

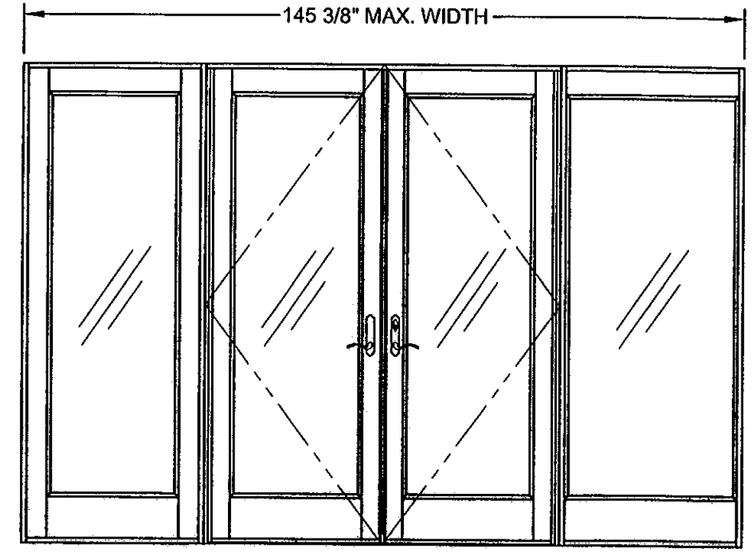

OXXO (SHOWING EACH VERSION SIDELITE)

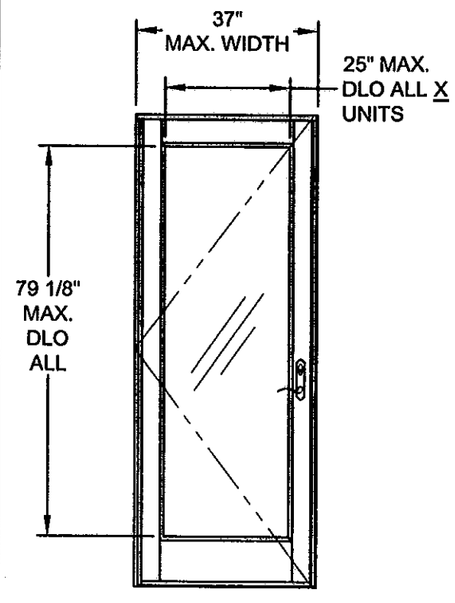

X

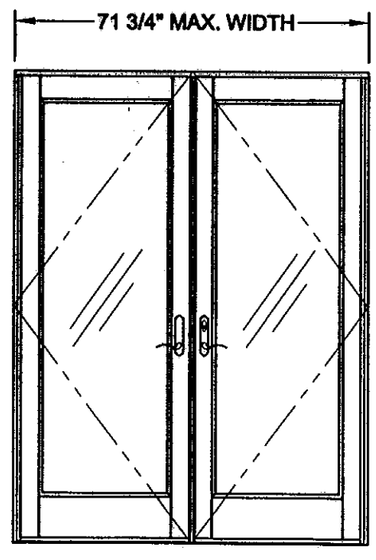

XX

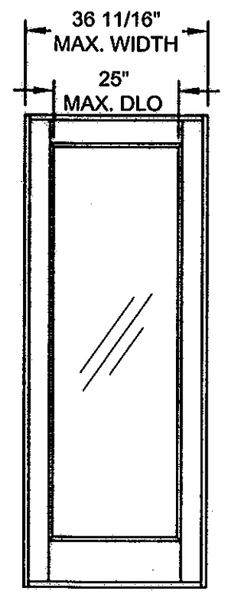

O (FULL JAMB)

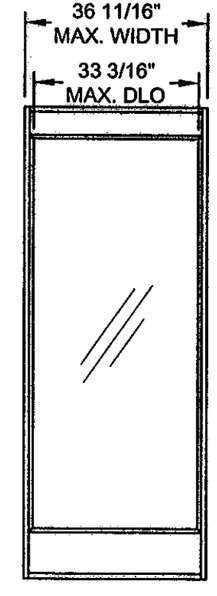

O (NARROW JAMB)

NOTES:
1. CONFIGURATIONS WITH SIDE LITES CAN BE EITHER NARROW JAMB OR FULL JAMB VERSION.
2. FOR ANCHOR SPACING AND DETAILS SEE SHEETS 9 THROUGH 11.
3. FOR VERTICAL SECTIONS SEE SHEET 5 AND FOR HORIZONTAL SECTIONS SEE SHEET 6.

PRODUCT REVISED
as complying with the Florida
Building Code
Acceptance No. 11-1013.24
Expiration Date FEB. 24, 2015
By [signature]
Miami Dade Product Control

Revised By:	Date:	Revisions:	
F.K.	10/12/06	B	NO CHANGE THIS SHEET
J.R.	09/22/09	C	NO CHANGE THIS SHEET
J.R.	01/25/10	D	NO CHANGES THIS SHEET
Drawn By: F.K.	Date: 12/23/04	Checked By: L.T.	Date: 4/8/05

1070 TECHNOLOGY DRIVE
NOKOMIS, FL 34275

P.O. BOX 1529
NOKOMIS, FL 34274

PGT®

Description: EXAMPLE ELEVATIONS

Title: ALUM. FRENCH DOOR & SIDE LITES, IMPACT

Series/Model:	Scale:	Sheet:	Drawing No.	Rev:
FD750	NTS	4 of 12	8000-11	E

ANTHONY LYNN MILLER
LICENSE
No. 58705
10/11/11
STATE OF FLORIDA
PROFESSIONAL ENGINEER

A. LYNN MILLER, P.E.
FL P.E.# 58705

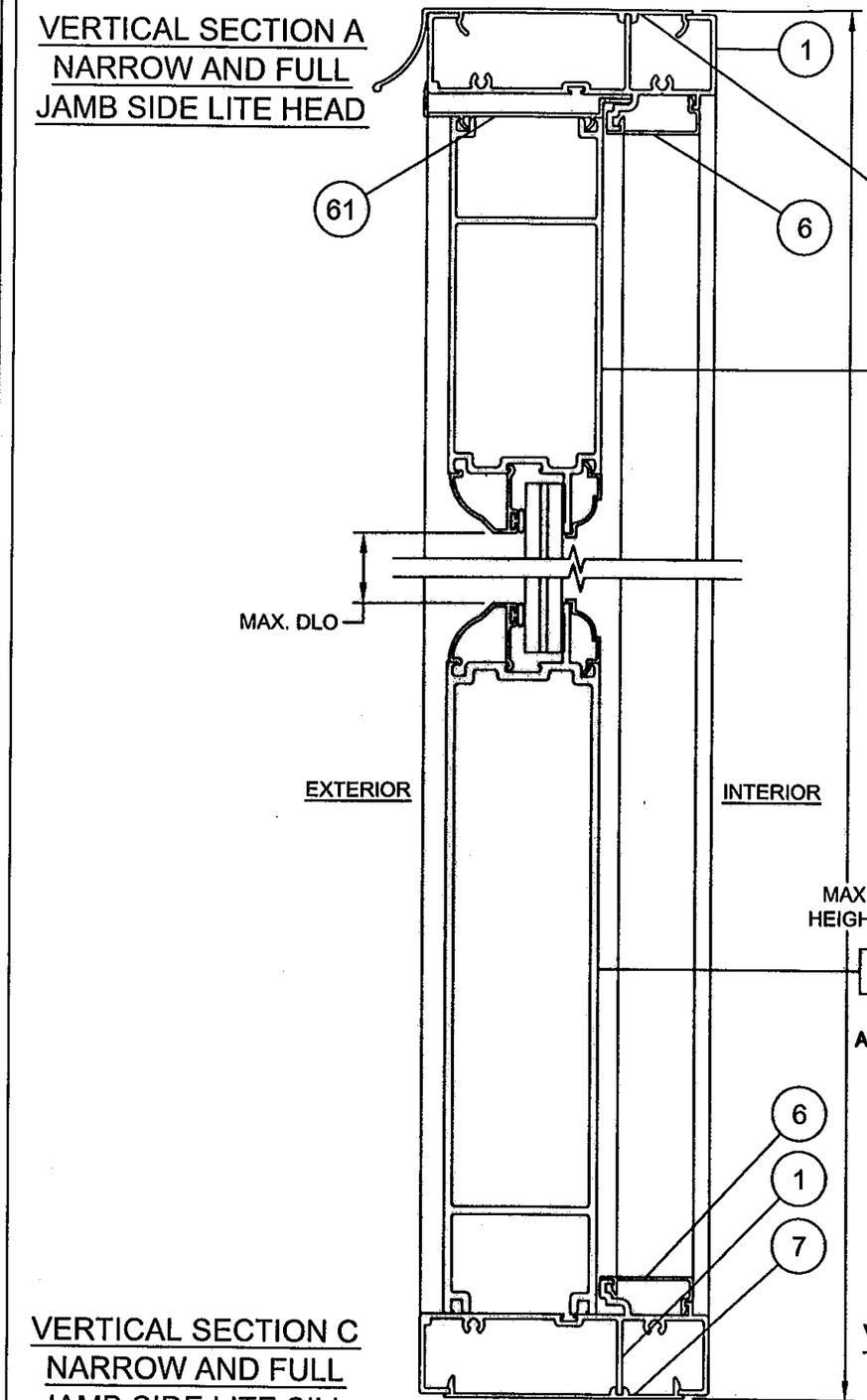

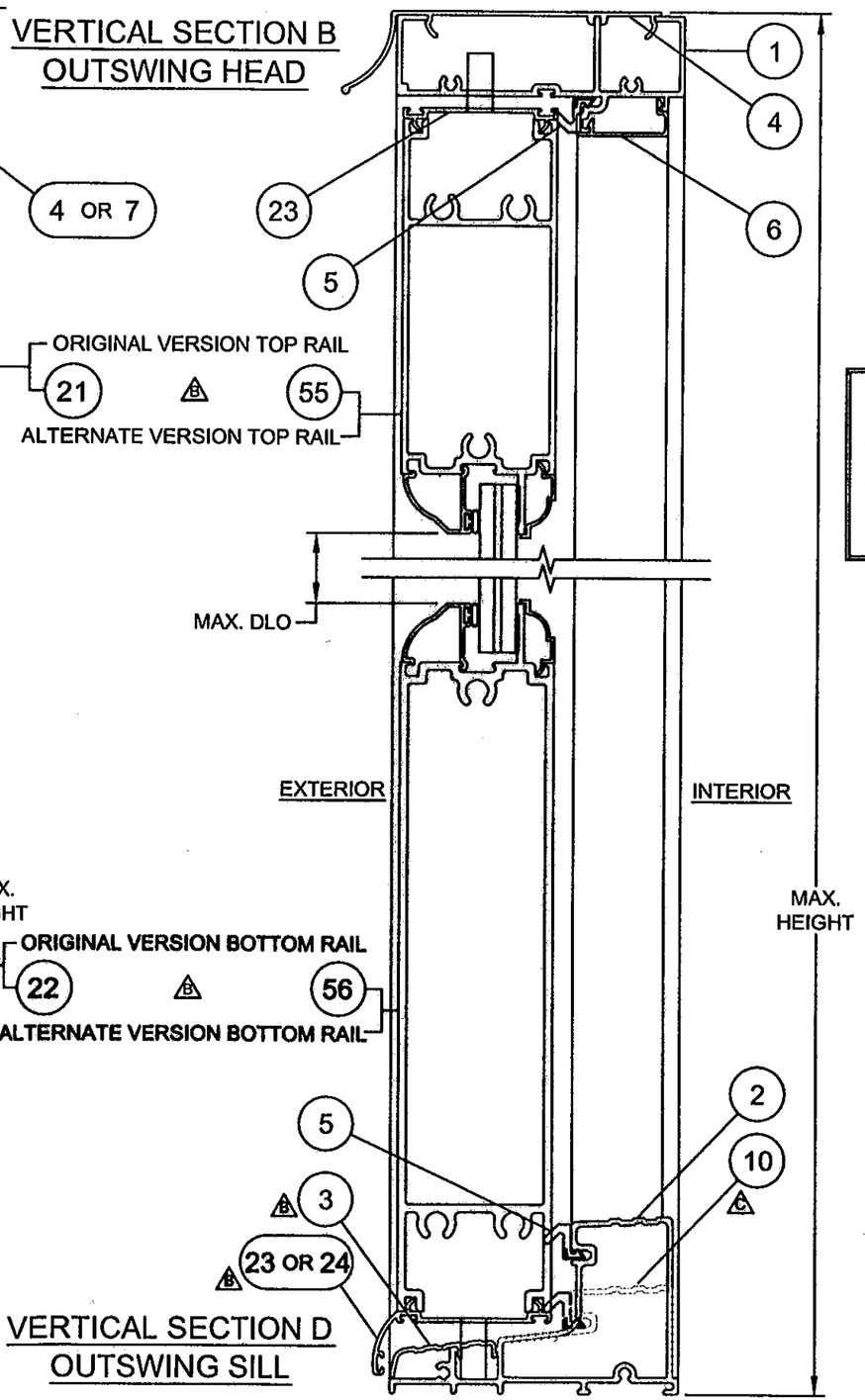

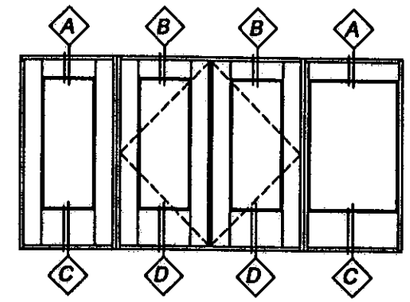

PRODUCT REVISED
as complying with the Florida
Building Code
Acceptance No. 11-1013.24
Expiration Date FEB. 24, 2015
By Florida Product Control

ANTHONY LYNN MILLER
LICENSE
No. 58705
10/11/11
STATE OF
FLORIDA
PROFESSIONAL ENGINEER
A. LYNN MILLER, P.E.
FL P.E.# 58705

Revised By:	Date:	Revisions:	
F.K.	10/12/06	B	REVISE ITEM 3. SHOW ALTERNATE TOP AND BOTTOM RAIL EXTRUSION.
J.R.	09/22/09	C	ADDED LOW RISE SILL
J.R.	01/25/10	D	NO CHANGES THIS SHEET
Drawn By: F.K.	Date: 12/23/04	Checked By: L.T.	Date: 4/8/05

1070 TECHNOLOGY DRIVE
NOKOMIS, FL 34275

P.O. BOX 1529
NOKOMIS, FL 34274

PGT®

Description: VERTICAL SECTIONS

Title: ALUM. FRENCH DOOR & SIDE LITES, IMPACT

Series/Model:	Scale:	Sheet	Drawing No.	Rev:
FD750	1/2	5 of 12	8000-11	E

OXXO HORIZONTAL SECTION SHOWING (1) OF EACH SIDE LITE TYPE

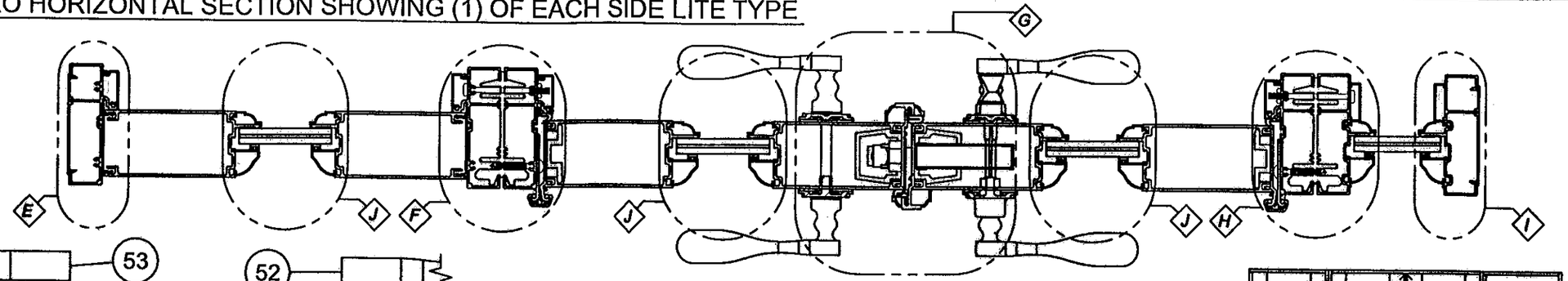

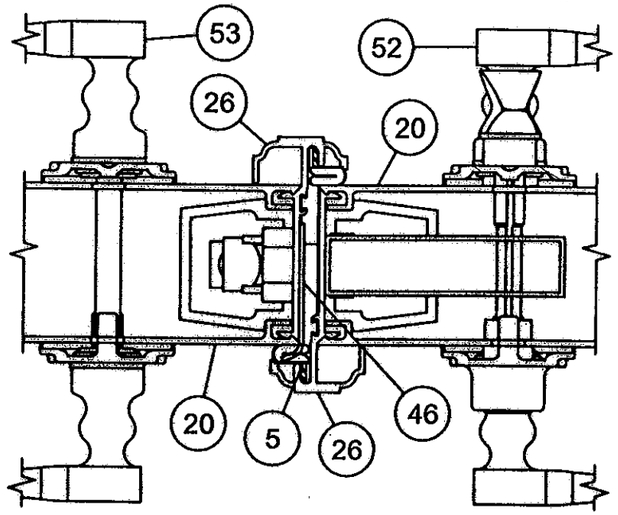

DETAIL G STILES AT ASTRAGAL

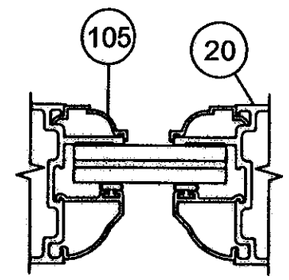

DETAIL J
SLAB AT
GLASS BED

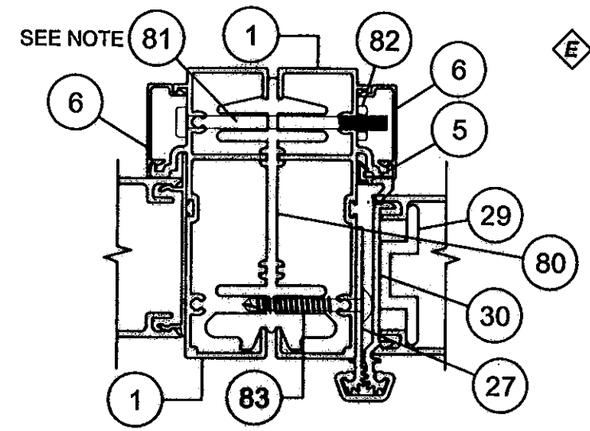

DETAIL F
FULL JAMB SIDE LITE
(AT HINGE JAMB)

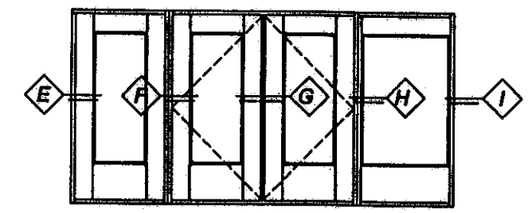

NOTE: ASSEMBLY HARDWARE QTY (3), 11" FROM TOP & BOTTOM AND ONE AT MIDSPAN

INTERIOR

EXTERIOR

PRODUCT REVISED
as complying with the Florida
Building Code
Acceptance No. 11-1013.24
Expiration Date FEB. 24, 2015
State Product Control

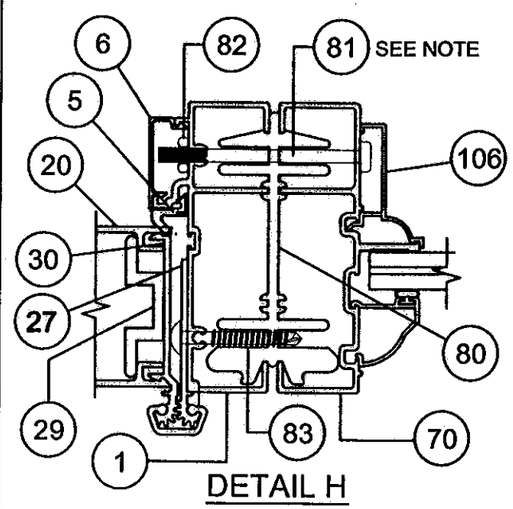

DETAIL H
NARROW JAMB SIDE LITE
(AT HINGE JAMB)

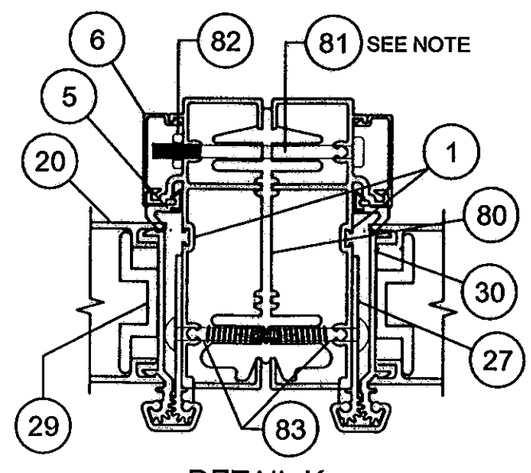

DETAIL K
HINGE JAMB TO HINGE JAMB
(NOT SHOWN ABOVE)

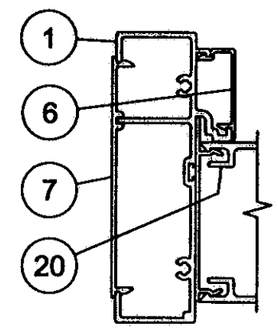

DETAIL E
JAMB, FULL JAMB
SIDE LITE

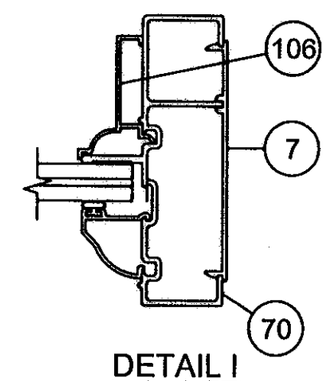

DETAIL I
JAMB, NARROW
JAMB SIDE LITE

ANTHONY LYNN MILLER
LICENSE
No. 58705
STATE OF
FLORIDA
PROFESSIONAL ENGINEER

A. LYNN MILLER, P.E.
FL P.E.# 58705

Revsd By:	Date:	Revisions:	
F.K.	10/12/06	B	NO CHANGE THIS SHEET
Revsd By: J.R.	09/22/09	C	NO CHANGE THIS SHEET
Revsd By: J.R.	01/25/10	D	NO CHANGES THIS SHEET
Drawn By: F.K.	Date: 12/23/04	Checked By: L.T.	Date: 4/8/05

1070 TECHNOLOGY DRIVE
NOKOMIS, FL 34275

P.O. BOX 1529
NOKOMIS, FL 34274

PGT®

Description: HORIZONTAL SECTION DETAILS

Title: ALUM. FRENCH DOOR & SIDE LITES, IMPACT

Series/Model:	Scale:	Sheet:	Drawing No.	Rev:
FD750	1/2	6 of 12	8000-11	E

FD750 DOOR(S)

ITEM	DWG#	DESCRIPTION	PGT#
		FRAME KIT PARTS	
1	8006	FRAME - HEAD & HINGE JAMB	68006
2	8003A	OUT-SWING SILL	68003A
3	8004C	OUT-SWING SILL COVER	68004C △3
4	8008	DRIP CAP	68008
5	----------	HEAD, SILL & JAMB WEATHERSTRIP (SCHLEGAL)	U83337T8500
6	8007	SCREW COVER	68007
7	8009	INSTALL PLATE	68009
8	----------	FRAME ASSEMBLY SCREW #8 X 1" PH QUAD	781PQA
9	8032	ASTRAGAL END SEAL	48032
10	8058	OUT-SWING SILL (LOW RISE)	48058 △1
		DOOR PANEL	
5	----------	HEAD, SILL & JAMB WEATHERSTRIP (SCHLEGAL)	U83337T8500
20	8012	STILE	68012
21	8014	TOP RAIL, (THREADED ROD DESIGN)	68014
22	8013	BOTTOM RAIL, (THREADED ROD DESIGN)	68013
23	8017	TOP SWEEP	68017
24	8016	BOTTOM SWEEP	68016
25	----------	SWEEP SCREWS, #4 X 1/2" PHIL PH	
26	8015	ASTRAGAL, ACTIVE & INACTIVE	68015
27	8021B	GEAR HINGE, JAMB SIDE	68021B
28	8020A	GEAR HINGE, COVER	68020A
29	8018	GEAR HINGE, BACK-UP PLATE	68018
30	8019A	GEAR HINGE, DOOR SIDE	68019A
31	8035	GEAR HINGE, BEARING	68035
32	----------	GEAR HINGE, SET-SCREW #6-32 x 1/4"	
33	----------	GEAR HINGE, MTG. SCREW #12 x 3/4" TRUSS HD.	
34	----------	GEAR HINGE, MTG. SCREW #12 x 1 1/2" TRUSS HD.	
35	----------	THREADED ROD 5/16-18 X 36"	6TRODA
36	----------	FLANGED HEX NUT 5/16-18	7990NUTA
37	8039	TRUSS CLAMP	60378M
38	8043	S/S GEAR LATCH MECHANISM (ASHLAND)	
39	8030	LOCK BLOCK	48030
40	----------	LATCH ASS'Y SCREWS #8 X 2" SS PHILL TR HD	78X2TPAX
41	8037	S/S SHOOT BOLT ROD (SULLIVAN)	
42	8045	STANDARD FLUSH BOLTS W/ SS ROD (SULLIVAN)	
43	8031	SHOOT BOLT GUIDE	48031
44	----------	SHOOT BOLT GUIDE & STRIKE SCREW 8-32 X 3/8" SS PHILL TR HD	78X38PFTX
45	8038R	RIGHT- STRIKE PLATE AT ASTRAGAL (ACTIVE HINGED LEFT)	W5110-43S1
46	8038L	LEFT - STRIKE PLATE AT ASTRAGAL (ACTIVE HINGED RIGHT)	W5110-44S1
47	----------	STRIKE PLATE SCREWS 8-32 X 3/8" SS PHILL TR HD	78X38PFTX
48	----------	STRIKE PLATE MIDDLE SCREW 6-24 X 1/2" FH	7612FPTX
49	8036	STRIKE PLATE AT HEAD & SILL	
50	----------	HEAD STRIKE SCREWS SS 8 X 1/2 PHILL FH	7858ZAX
51	----------	STRIKE PLATE SCREWS @SILL SS 8 X 1/2 PHILL UNDERCUT FH	78X12PFHUX
52	8041	ACTIVE TRIM SET (ASHLAND)	
53	8042	PASSIVE TRIM SET (ASHLAND)	
54	8044	STAINLESS STEEL PASSIVE LOCK GEAR (ASHLAND)	
55	8014A	TOP RAIL (LAG BOLT DESIGN)	68014A △1
56	8013A	BOTTOM RAIL (LAG BOLT DESIGN)	68013A △1
57	----------	5/16" x 2 1/2" LAG BOLTS	7516LBOLTX △1

FD750 FULL JAMB SIDE LITE

ITEM	DWG #	DESCRIPTION	PGT#
1	8006	FRAME - HEAD, SILL & JAMB	68006
4	8008	DRIP CAP	68008
6	8007	SCREW COVER	68007
7	8009	INSTALL PLATE	68009
8	----------	FRAME ASSEMBLY SCREW #8 X 1" PH QUAD	781PQA
20	8012	STILE	68012
21	8014	TOP RAIL	68014
22	8013	BOTTOM RAIL	68013
35	----------	THREADED ROD 5/16-18 X 36"	6TRODA
36	----------	FLANGED HEX NUT 5/16-18	7990NUTA
37	8039	TRUSS CLAMP	60378M
60	----------	#8 X 3/4" PH SQ DRIVE TEK SCREW	78X34PSTW
61	8028	SIDE LITE HEAD TRIM	68028
62	8029	SIDE LITE JAMB TRIM	68029

FD750 NARROW JAMB SIDE LITE

1	8006	FRAME - HEAD & SILL	68006
4	8008	DRIP CAP	68008
6	8007	SCREW COVER	68007
7	8009	INSTALL PLATE	68009
8	----------	FRAME ASSEMBLY SCREW #8 X 1" PH QUAD	781PQA
21	8014	TOP RAIL	68014
22	8013	BOTTOM RAIL	68013
35	----------	THREADED ROD 5/16-18 X 36"	6TRODA
36	----------	FLANGED HEX NUT 5/16-18	7990NUTA
37	8039	TRUSS CLAMP	60378M
60	----------	#8 X 3/4" PH SQ DRIVE TEK SCREW	78X34PSTW
61	8028	SIDE LITE HEAD TRIM	68028
70	8010	FRAME, JAMB	68010

ASSEMBLY KIT

80	8033B	FRENCH DOOR ASSEMBLY BEAM	68033B
81	----------	#10-24 X 2 1/2" PH SCREW	
82	----------	#10-24 HEX NUT	
83	----------	#12 X 1 1/2" TR HD TEK SCREW	
84	8056	SUBSILL (OPTIONAL)	68056 △1

GLASS, BEADS & SILICONE

90	----------	GLAZING SEALANT, DOW CORNING 899, 983, 995 OR EQUIVALENT	
91	----------	7/16" LAMINATED GLASS (3/16" ANN.,.090 PVB, 3/16" HS)	
92	----------	7/16" LAMINATED GLASS (3/16" HS.,.090 PVB, 3/16" HS)	
93	----------	7/16" LAMINATED GLASS (3/16" ANN.,.075 VANCEVA, 3/16" HS)	
94	----------	7/16" LAMINATED GLASS (3/16" HS.,.075 VANCEVA, 3/16" HS)	
95	----------	7/8" LAMI I.G. (3/16" T, 1/4" SPACE, 3/16" ANN.,.090 PVB, 3/16" HS)	
96	----------	7/8" LAMI I.G. (3/16" T, 1/4" SPACE, 3/16" HS.,.090 PVB, 3/16" HS)	
97	----------	7/8" LAMI I.G. (3/16" T, 1/4" SPACE, 3/16" ANN.,.075 VANCEVA, 3/16" HS)	
98	----------	7/8" LAMI I.G. (3/16" T, 1/4" SPACE, 3/16" HS.,.075 VANCEVA, 3/16" HS)	
105	8022	BACK BEAD	68022
106	8026A	SL BACKBEAD	68026A
107	8023A	7/16" BEAD	68023A
108	8024A	7/8" IG BEAD	68024A
109	1224	VINYL BULB WSTP (THICK)	6TP247

PRODUCT REVISED
as complying with the Florida Building Code
Antiplicance No. 11-1013.24
Expiration Date FEB. 24, 2015
By [signature]
Product Control

Revsd By:	Date:	Revisions:	
F.K.	10/12/06	B	UPDATE ITEM 3. ADD ITEMS 55, 56, 57 AND 84.
J.R.	09/22/09	C	ADDED LOW RISE SILL
J.R.	01/25/10	D	NO CHANGES THIS SHEET
Drawn By: F.K.	Date: 12/23/04	Checked By: L.T.	Date: 4/8/05

1070 TECHNOLOGY DRIVE
NOKOMIS, FL 34275

P.O. BOX 1529
NOKOMIS, FL 34274

PGT®

Description: PARTS LIST

Title: ALUM. FRENCH DOOR & SIDE LITES, IMPACT

Series/Model:	Scale:	Sheet:	Drawing No.	Rev:
FD750	NA	7 of 12	8000-11	E

ANTHONY LYNN MILLER
LICENSE
No. 58705
10/11/11
STATE OF FLORIDA
PROFESSIONAL ENGINEER

A. LYNN MILLER, P.E.
FL P.E.# 58705

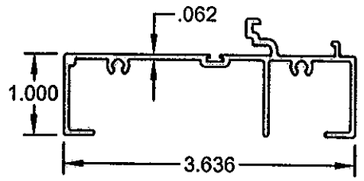

1 #8006 6063-T6
FRAME, HEAD, JAMB
AND SIDELITE SILL

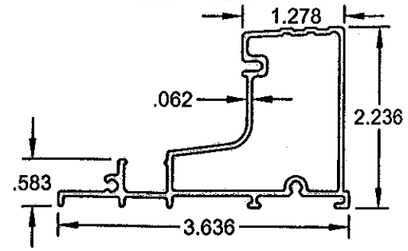

2 #8003A 6063-T6
OUT-SWING SILL

3 #8004C 6063-T5 △B
OS SILL COVER

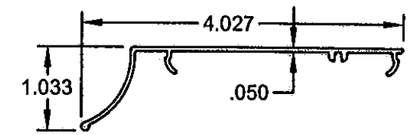

4 #8008 6063-T5
DRIP CAP

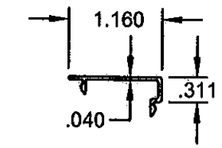

6 #8007 6063-T6
SCREW COVER

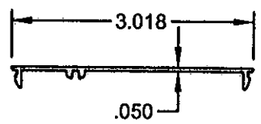

7 #8009 6063-T5
INSTALL PLATE

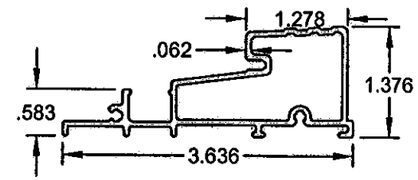

△A 10 #8056 6063-T6
OUT-SWING LOW SILL

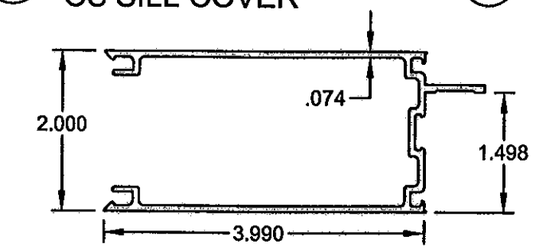

20 #8012 6063-T6
STILE

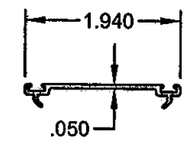

23 #8017 6063-T5
TOP SWEEP

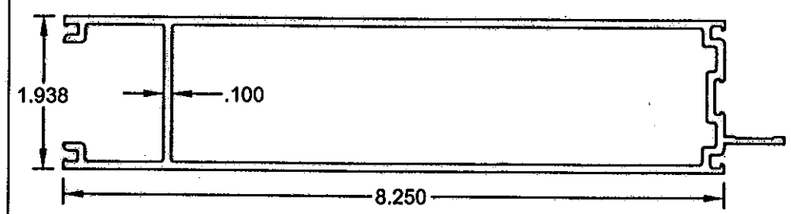

22 #8013 6063-T6
BOTTOM RAIL

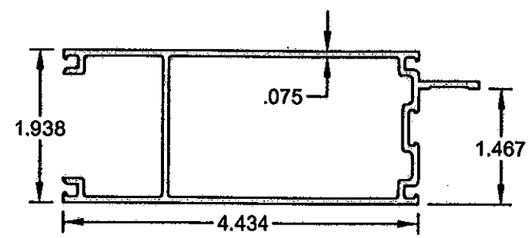

21 #8014 6063-T5
TOP RAIL

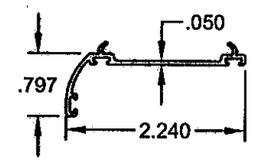

24 #8016 6063-T5
BOTTOM SWEEP

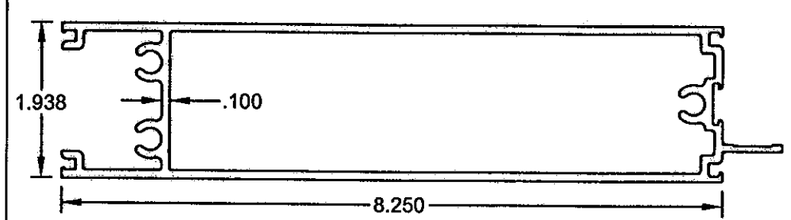

56 #8013A 6063-T6
BOTTOM RAIL, LAG BOLT DESIGN

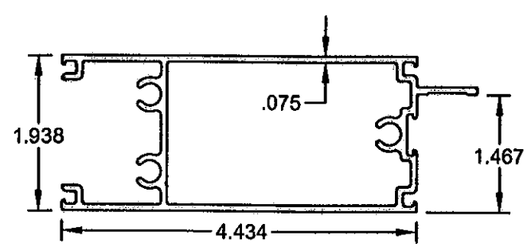

55 #8014A 6063-T5
TOP RAIL, LAG BOLT DESIGN

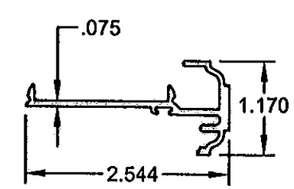

26 #8015 6063-T6
ASTRAGAL

PRODUCT REVISED
as complying with the Florida
Building Code
Acceptance No 11-1013.24
Expiration Date FEB. 24, 2015
By [signature]
Miami Dade Product Control

Revsd By:	Date:	Revisions:	
F.K.	10/12/06	B	UPGRADE ITEMS 3.
J.R.	09/22/09	C	ADDED LOW RISE SILL AND SECOND EXTRUSION SHEET.
J.R.	01/25/10	D	NO CHANGES THIS SHEET
Drawn By: F.K.	Date: 12/23/04	Checked By: L.T.	Date: 4/8/05

1070 TECHNOLOGY DRIVE
NOKOMIS, FL 34275

P.O. BOX 1529
NOKOMIS, FL 34274

PGT®

Description: EXTRUSION PROFILES

Title: ALUM. FRENCH DOOR & SIDE LITES, IMPACT

Series/Model:	Scale:	Sheet:	Drawing No.	Rev:
FD750	1/2	8 of 12	8000-11	E

ANTHONY LYNN MILLER
LICENSE
No. 58705
10/11/11
STATE OF FLORIDA
PROFESSIONAL ENGINEER

A. LYNN MILLER, P.E.
FL P.E.# 58705

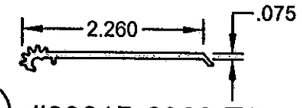

27 #8021B 6063-T6
GEAR HINGE, JAMB

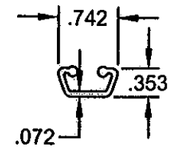

28 #8020A 6063-T6
GEAR HINGE, COVER

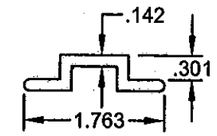

29 #8018 6063-T5
HINGE, BACK-UP

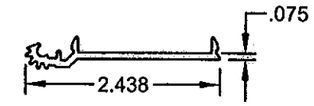

30 #8019A 6063-T6
GEAR HINGE, DOOR

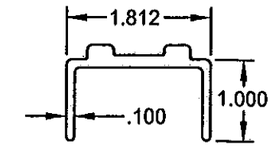

37 #8039 6063-T6
TRUSS CLAMP

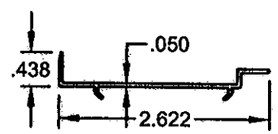

61 #8028 6063-T5
SL HEAD TRIM

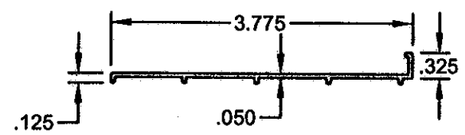

84 #8056 6063-T4
SUBSILL, OPTIONAL

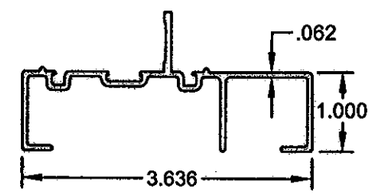

70 #8010 6063-T6
NARROW SL JAMB

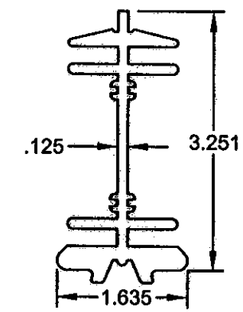

80 #8033B 6105-T5
FD ASS'Y BEAM

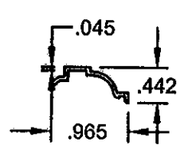

105 #8022 6063-T5
BACKBEAD

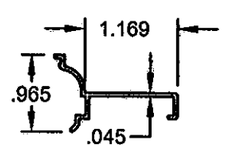

106 #8026A 6063-T5
SL BACKBEAD

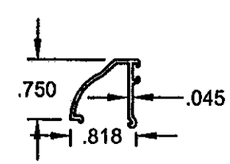

107 #8023A 6063-T5
7/16" BEAD

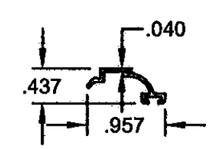

108 #8024A 6063-T5
I.G. BEAD

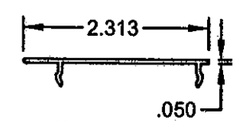

62 #8029 6063-T5
SL JAMB TRIM

PRODUCT REVISED
as complying with the Florida
Building Code
Acceptance No 11-1013.24
Expiration Date FEB. 24, 2015
By [signature]
Bureau Staff Product Control

Revsd By:	Date:	Revisions:	
F.K.	10/12/06	B	UPGRADE ITEMS 3.
J.R.	09/22/09	C	NEW PAGE
J.R.	01/25/10	D	NO CHANGES THIS SHEET
Drawn By: F.K.	Date: 12/23/04	Checked By: L.T.	Date: 4/8/05

1070 TECHNOLOGY DRIVE
NOKOMIS, FL 34275

P.O. BOX 1529
NOKOMIS, FL 34274

PGT®

Description: EXTRUSION PROFILES

Title: ALUM. FRENCH DOOR & SIDE LITES, IMPACT

Series/Model:	Scale:	Sheet:	Drawing No.	Rev:
FD750	1/2	9 of 12	8000-11	E

ANTHONY LYNN MILLER
LICENSE
No. 58705
10/11/11
STATE OF FLORIDA
PROFESSIONAL ENGINEER

A. LYNN MILLER, P.E.
FL P.E.# 58705

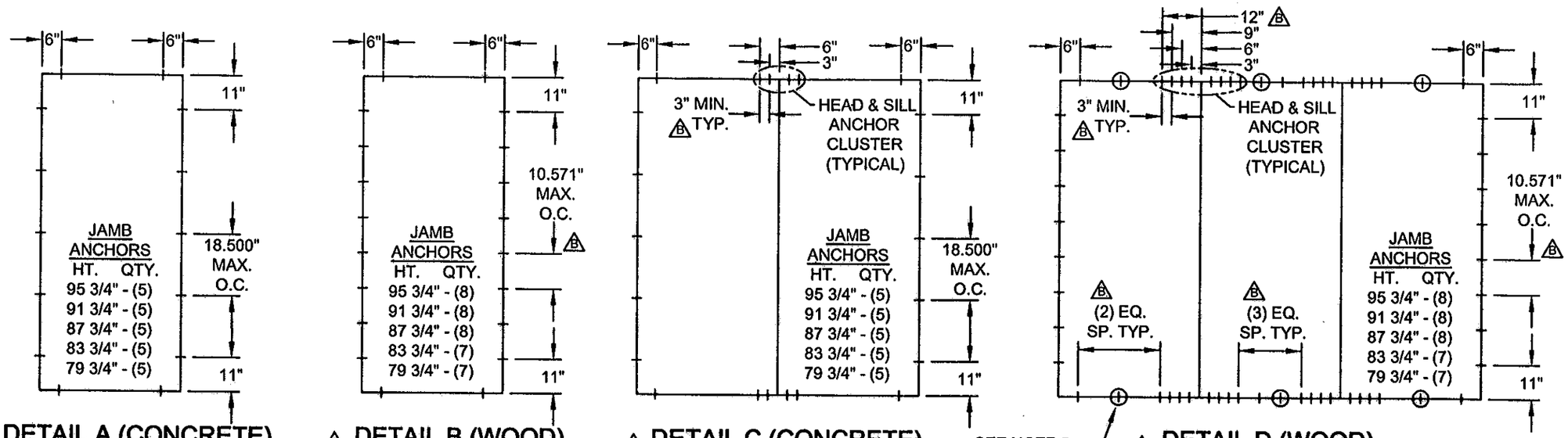

ANCHORAGE SPACING REQUIREMENTS:

1. DETAILS A AND B ABOVE REPRESENT ANCHORING OF SINGLE X DOORS, OR INDIVIDUAL SIDE LITE O PANELS WITH FULL OR NARROW WIDTH JAMBS. DETAILS C AND D ABOVE REPRESENT ANCHORING OF ANY MIXTURE OF DOUBLE XX DOORS, SINGLE X DOORS, NARROW JAMB OR FULL JAMB SIDE LITE PANELS, FOR MULTIPLE-PANEL INSTALLATIONS OF TWO OR MORE PANELS. UNLESS OTHERWISE STATED, DIMENSIONS OF DETAILS A THROUGH D ARE MAXIMUMS.

2. ANCHOR TYPES: 1 - 1/4" ELCO ULTRACON 2 -1/4" ELCO SS4 CRETE-FLEX 3 - #12 STEEL SCREW (G5)

B

CONCRETE SUBSTRATE USE TYPE 1 AT 1 3/8" MIN. EMBEDMENT OR TYPE 2 AT 1 3/4" EMBEDMENT. 1 3/4" MIN. EDGE DISTANCE FOR BOTH.
WOOD SUSTRATE - USE TYPE 2 OR TYPE 3 AT 1 3/8" MIN. EMBEDMENT.

3. SINGLE PANEL CONFIGURATIONS: (DETAIL A, CONCRETE SUBSTRATE. DETAIL B, WOOD SUBSTRATE)

B

HEAD AND SILL.....6" MAX. FROM FRAME CORNERS.
JAMBS.....11" MAX. FROM FRAME CORNERS, 18.500" MAX. O.C. CONCRETE SUBSTRATE (DETAIL A) AND 10.571" MAX. O.C. WOOD SUBSTRATE (DETAIL B).

4. TWO OR MORE PANEL CONFIGURATIONS: (DETAIL C, CONCRETE SUBSTRATE)

HEAD AND SILL.....6" MAX. FROM FRAME CORNERS, AND AT 3" AND 6" MAX. ON EACH SIDE OF ASSEMBLY BEAM AND/OR ASTRAGAL LOCATIONS (CLUSTER OF 4).
JAMBS....11" MAX. FROM FRAME CORNERS AND 18.500" MAX. O.C.

5. TWO OR MORE PANEL CONFIGURATIONS: (DETAIL D, WOOD SUBSTRATE)

B

HEAD AND SILL.....6" MAX. FROM FRAME CORNERS, AND AT 3", 6", 9" AND 12" MAX. ON EACH SIDE OF ASSEMBLY BEAM AND/OR ASTRAGAL LOCATIONS (CLUSTER OF 8). PLUS ENCIRCLED ANCHORS OUTSIDE CLUSTERS, REQUIRED ONLY ON PANEL WIDTHS OVER 27 3/4".
JAMBS.....11" MAX. FROM FRAME CORNERS AND 10.571" MAX. O.C.

PRODUCT REVISED
as complying with the Florida Building Code
Acceptance No. 11-1013.24
Expiration Date: FEB. 24, 2015
By: Manuel Perez
Miami-Dade Product Control

Revsd By:	Date:	Revisions:	
F.K.	10/12/06	B	REMOVE NOTE PERTAINING TO ANCHORAGE OUTSIDE M-D COUNTY. REVISE ANCHORAGE PER FBC2004 AND REVISE NOTES 2, 3 & 5..
Revsd By: J.R.	09/22/09	C	NO CHANGE THIS SHEET
Revsd By: J.R.	01/25/10	D	CHANGED "TAPCON" TO "ULTRACON".
Drawn By: F.K.	Date: 12/23/04	Checked By: L.T.	Date: 4/8/05

1070 TECHNOLOGY DRIVE
NOKOMIS, FL 34275

P.O. BOX 1529
NOKOMIS, FL 34274

PGT®

Description: ANCHORAGE SPACING

Title: ALUM. FRENCH DOOR & SIDE LITES, IMPACT

Series/Model:	Scale:	Sheet:	Drawing No.	Rev:
FD750	1/4	10 of 12	8000-11	E

ANTHONY LYNN MILLER
LICENSE
No. 58705
10/11/11
STATE OF FLORIDA
PROFESSIONAL ENGINEER

A. LYNN MILLER, P.E.
FL P.E.# 58705

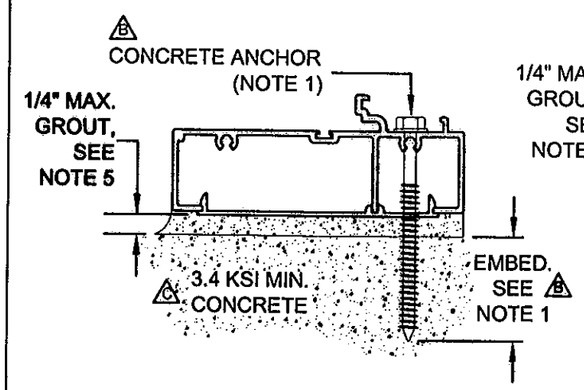

TYPICAL SIDE LITE SILL
(DIRECT TO CONCRETE)

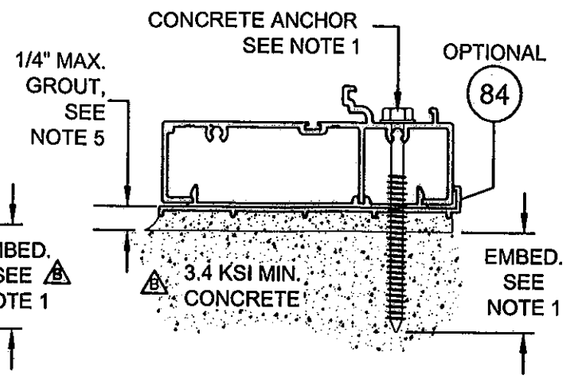

OPTIONAL SIDE LITE SILL
(SUBSILL TO CONCRETE)

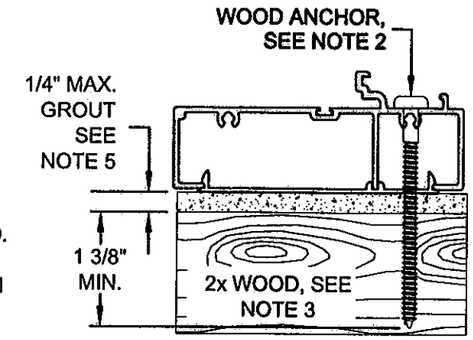

C TYPICAL SIDE LITE SILL
(DIRECT TO WOOD)

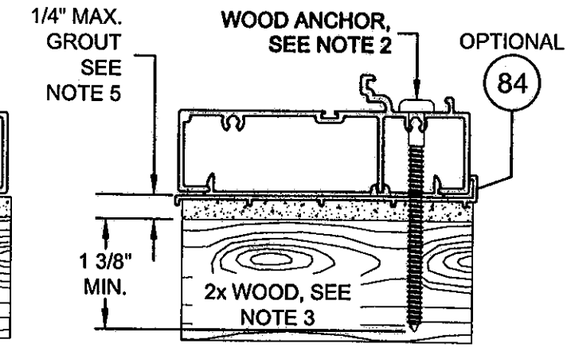

OPTIONAL SIDE LITE SILL
(SUBSILL TO WOOD)

EXTERIOR INTERIOR
(ALL HEAD & SILL SECTIONS)

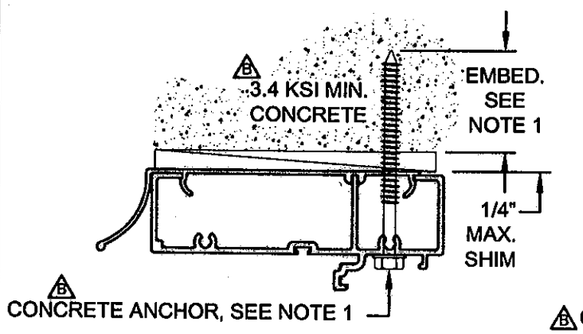

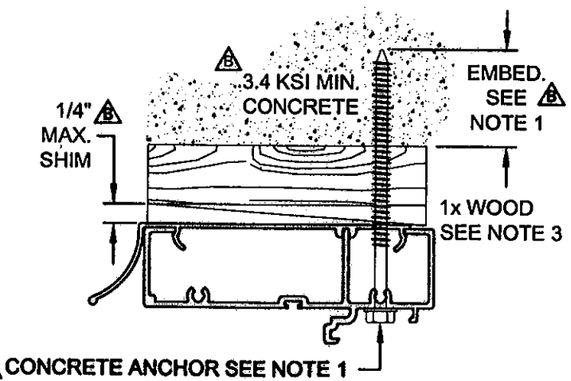

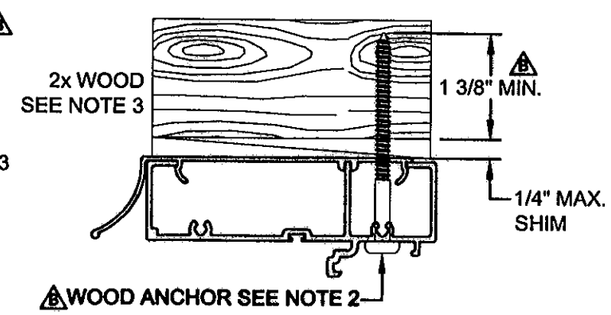

TYPICAL DOOR & SIDE LITE HEAD

B

NOTES:

1. FOR CONCRETE APPLICATIONS IN MIAMI-DADE COUNTY, USE ONLY MIAMI-DADE COUNTY APPROVED ELCO 1/4" ULTRACONS OR 1/4" SS4 CRETE-FLEX. MIN. DISTANCE FROM ANCHOR TO CONCRETE EDGE IS 1 3/4". MIN. EMBEDMENT: 1/4" ULTRACON - 1 3/8", 1/4" SS4 CRETE-FLEX - 1 3/4".
2. FOR WOOD APPLICATIONS USE #12 STEEL SCREWS (G5) OR ELCO 1/4" SS4 CRETE-FLEX - 1 3/8" MIN. EMBEDMENT FOR EITHER.
3. WOOD BUCKS DEPICTED AS 1x ARE LESS THAN 1 1/2" THICK. 1x WOOD BUCKS ARE OPTIONAL IF UNIT IS INSTALLED DIRECTLY TO SOLID CONCRETE. WOOD BUCKS DEPICTED AS 2x ARE 1 1/2" THICK OR GREATER. INSTALLATION TO THE SUBSTRATE OF WOOD BUCKS TO BE ENGINEERED BY OTHERS OR AS APPROVED BY THE AUTHORITY HAVING JURISDICTION (AHJ).
4. FOR ATTACHMENT TO ALUM: THE MAT'L SHALL BE A MIN. STRENGTH OF 6063-T5 AND A MIN. OF 1/8" THICK. THE ALUM. STRUCTURAL MEMBER SHALL BE OF A SIZE TO PROVIDE FULL SUPPORT TO THE DOOR FRAME SIMILAR TO THAT SHOWN IN THE DETAILS ON THIS SHEET FOR 2x WOOD BUCKS. THE ANCHOR SHALL BE A #12 SMS WITH FULL ENGAGEMENT INTO THE ALUM. IF THESE CRITERIA ARE MET, THE PRESSURES SHOWN ON SHEET 3 AND ANCHORAGE SPACING FOR WOOD SHOWN ON SHEET 10 MAY BE USED.
5. IF SILL IS TIGHT TO SUBSTRATE, GROUT OR OTHER MATERIAL IS NOT REQUIRED. IF USED, NON-SHRINK, NON-METALLIC GROUT, 3400 PSI MIN., (DONE BY OTHERS) MUST FULLY SUPPORT THE ENTIRE LENGTH OF THE SILL THAT IS NOT TIGHT TO THE SUBSTRATE, AND TRANSFER SHEAR LOAD TO SUBSTRATE.

Revsd By:	Date:	Revisions:	
F.K.	10/12/06	B	UPDATE ANCHORAGE AND NOTES
J.R.	09/22/09	C	CHANGED MIN KSI OF CONCRETE. ADDED SIDELITE SILL DETAIL. REORGANIZED DETAILS.
J.R.	01/25/10	D	CHANGED "TAPCON" TO "ULTRACON".
Drawn By: F.K.	Date: 12/23/04	Checked By: L.T.	Date: 4/8/05

1070 TECHNOLOGY DRIVE
NOKOMIS, FL 34275

P.O. BOX 1529
NOKOMIS, FL 34274

PGT®

Description: ANCHORAGE DETAILS

Title: ALUM. FRENCH DOOR & SIDE LITES, IMPACT

Series/Model:	Scale:	Sheet:	Drawing No.	Rev:
FD750	1/4	11 of 12	8000-11	E

PRODUCT REVISED
as complying with the Florida Building Code
Acceptance No. 11-1013.24
Expiration Date FEB. 24, 2015
By Manuel Cruz
Miami-Dade Product Control

ANTHONY LYNN MILLER
LICENSE
No. 58705
10/11/11
STATE OF FLORIDA
PROFESSIONAL ENGINEER

A. LYNN MILLER, P.E.
FL P.E.# 58705

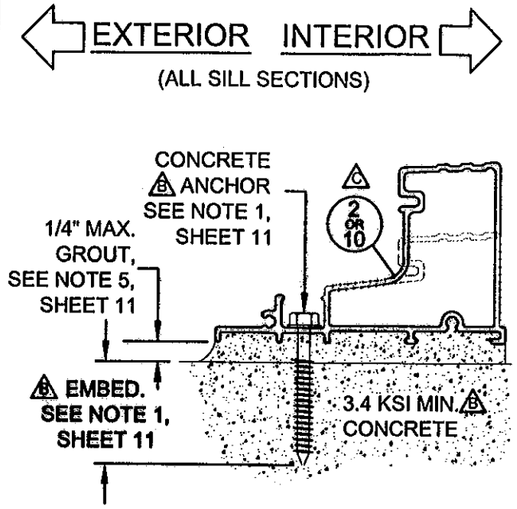

TYPICAL DOOR SILL
(DIRECT TO CONCRETE)

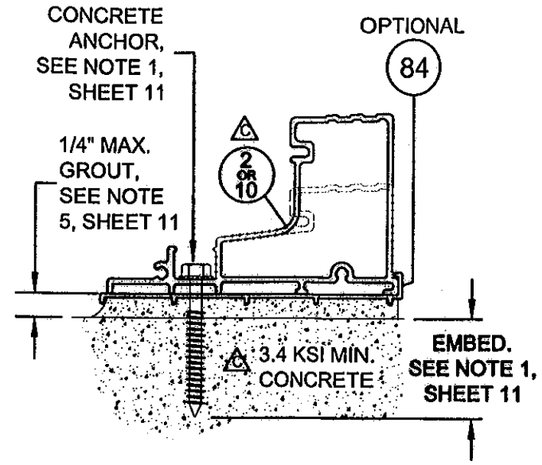

OPTIONAL DOOR SILL
(SUBSILL TO CONCRETE)

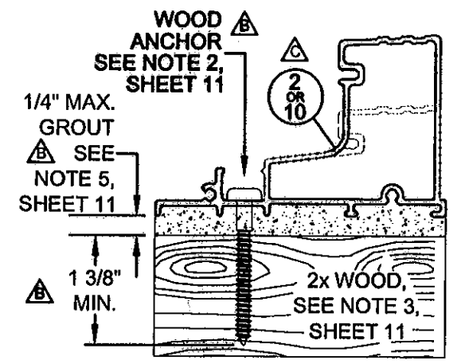

TYPICAL DOOR SILL
(DIRECT TO WOOD)

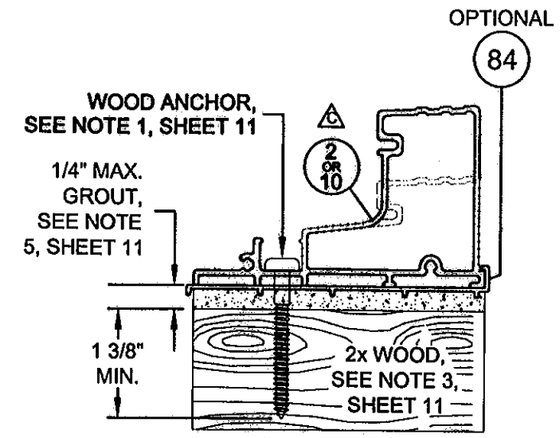

OPTIONAL DOOR SILL
(SUBSILL TO WOOD)

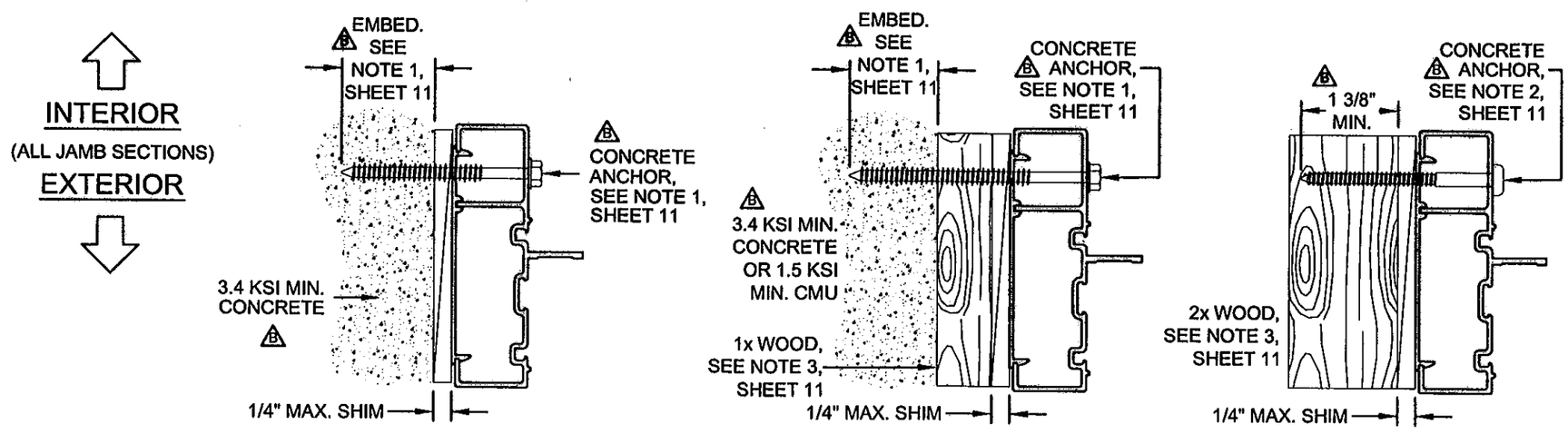

TYPICAL DOOR & SIDE LITE JAMB

PRODUCT REVIEWED
in complying with the Florida Building Code
Acceptance No. 11-1013.24
Expiration Date FEB. 24, 2015
By Maurice Perez
Miami-Dade Product Control

ANTHONY LYNN MILLER
LICENSE
No. 58705
10/11/11
STATE OF FLORIDA
PROFESSIONAL ENGINEER

A. LYNN MILLER, P.E.
FL P.E.# 58705

Revsd By:	Date:	Revisions:	
F.K.	10/12/06	B	NEW SHT. ADD SUBSILL AND ALTERNATE TOP & BOTTOM RAIL EXTRUSIONS.
Revsd By: J.R.	Date: 09/22/09	Revisions: C	CHANGED MIN KSI OF CONCRETE. ADDED LOW RISE SILL OPTION. REORGANIZED DETAILS.
Revsd By: J.R.	Date: 01/25/10	Revisions: D	NO CHANGES THIS SHEET
Drawn By: F.K.	Date: 12/23/04	Checked By: L.T.	Date: 4/8/05

1070 TECHNOLOGY DRIVE
NOKOMIS, FL 34275

P.O. BOX 1529
NOKOMIS, FL 34274

PGT®

Description: ANCHORAGE DETAILS

Title: ALUM. FRENCH DOOR & SIDE LITES, IMPACT

Series/Model:	Scale:	Sheet:	Drawing No.	Rev:
FD750	1/4	12 of 12	8000-11	E