MIAMI-DADE COUNTY
DEPARTMENT OF PERMITTING, ENVIRONMENT, AND REGULATORY AFFAIRS (PERA)
BOARD AND CODE ADMINISTRATION DIVISION

NOTICE OF ACCEPTANCE (NOA)

MIAMI-DADE COUNTY
PRODUCT CONTROL SECTION
11805 SW 26 Street, Room 208
Miami, Florida 33175-2474
T (786) 315-2590 F (786) 315-2599
www.miamidade.gov/pera/

KML Windows, Inc.
71 Second Street,
Strathroy, Ontario, Canada N7G3H

SCOPE:

This NOA is being issued under the applicable rules and regulations governing the use of construction materials. The documentation submitted has been reviewed and accepted by Miami-Dade County PERA -Product Control Section to be used in Miami Dade County and other areas where allowed by the Authority Having Jurisdiction (AHJ).

This NOA shall not be valid after the expiration date stated below. The Miami-Dade County Product Control Section (In Miami Dade County) and/or the AHJ (in areas other than Miami Dade County) reserve the right to have this product or material tested for quality assurance purposes. If this product or material fails to perform in the accepted manner, the manufacturer will incur the expense of such testing and the AHJ may immediately revoke, modify, or suspend the use of such product or material within their jurisdiction. PERA reserves the right to revoke this acceptance, if it is determined by Miami-Dade County Product Control Section that this product or material fails to meet the requirements of the applicable building code.
This product is approved as described herein, and has been designed to comply with the Florida Building Code, including the High Velocity Hurricane Zone.

DESCRIPTION: Series "Aluminum Clad" Outswing Wood French Door-Impact

APPROVAL DOCUMENT: Drawing No.**1228A Rev B**, titled "Aluminum Clad Wood French Impact Doors", sheets 1 through 12 of 12, dated 02/24/09 and last revised on OCT 12, 2011, prepared by W.W. Schaefer Engineering & Consulting, P.A., signed and sealed by Warren Schaefer, P.E., bearing the Miami-Dade County Product Control Revison stamp with the Notice of Acceptance number and expiration date by the Miami-Dade County Product Control Section.

MISSILE IMPACT RATING: Large and Small Missile Impact Resistant

Limitation:

1. CMU installation is not applicable to Head or Sill.
2. Two (2) #8 screws into clip installation must have min penetration of 1-1/4" into wood.

LABELING: Each unit shall bear a permanent label with the manufacturer's name or logo, Ontario, Canada and series and following statement: "Miami-Dade County Product Control Approved", unless otherwise noted herein.

RENEWAL of this NOA shall be considered after a renewal application has been filed and there has been no change in the applicable building code negatively affecting the performance of this product.

TERMINATION of this NOA will occur after the expiration date or if there has been a revision or change in the materials, use, and/or manufacture of the product or process. Misuse of this NOA as an endorsement of any product, for sales, advertising or any other purposes shall automatically terminate this NOA. Failure to comply with any section of this NOA shall be cause for termination and removal of NOA.

ADVERTISEMENT: The NOA number preceded by the words Miami-Dade County, Florida, and followed by the expiration date may be displayed in advertising literature. If any portion of the NOA is displayed, then it shall be done in its entirety.

INSPECTION: A copy of this entire NOA shall be provided to the user by the manufacturer or its distributors and shall be available for inspection at the job site at the request of the Building Official.
This NOA **revises NOA # 09-0305.02** and consists of this page 1 and evidence pages E-1, as well as approval document mentioned above.
The submitted documentation was reviewed by **Ishaq I. Chanda, P.E.**

MIAMI-DADE COUNTY APPROVED
1/10/12

NOTICE OF ACCEPTANCE: EVIDENCE SUBMITTED

A. DRAWINGS

1. Manufacturer's die drawings and sections (transferred from file # **09-0305.02**)
2. Drawing No. **1228A Rev B**, titled "Aluminum Clad Wood French Impact Doors", sheets 1 through 12 of 12, dated 02/24/09 and last revised on OCT 12, 2011, prepared by W.W. Schaefer Engineering & Consulting, P.A., signed and sealed by Warren Schaefer, P.E.

Note: This revision is FBC 2010 notes only.

B. TESTS (transferred from file # **09-0305.02**)

1. Test reports on 1) Uniform Static Air Pressure Test, Loading per FBC, TAS 202-94
   2) Large Missile Impact Test per FBC, TAS 201-94
   3) Cyclic Wind Pressure Loading per FBC, TAS 203-94

   along with installation diagram of outswing clad wood French doors, prepared by Architectural Testing, Inc., Test Report No. **ATI 02-35026.01**, dated 2/19/03, signed & sealed by Steven Urich, P.E
2. Test reports on 1) Air Infiltration Test, per FBC, TAS 202-94
   2) Uniform Static Air Pressure Test, Loading per FBC, TAS 202-94
   3) Water Resistance Test, per FBC, TAS 202-94
   4) Large Missile Impact Test per FBC, TAS 201-94
   5) Cyclic Wind Pressure Loading per FBC, TAS 203-94
   6) Forced Entry Test, per FBC 2411 3.2.1 and TAS 202-94

   along with installation diagram of outswing wood French doors with different shape top, with & without sidelites, prepared by Intertek Testing Services NA Inc., Test Report(s) No. **J99022770-231-07** and **J99022770-231-08**, dated 10/11/00, both signed and sealed by Douglas Keith Tucker, P.E

C. CALCULATIONS

1. Statement letter of compliance dated 10/11/11 to FBC 2010 & 2007, prepared by W.W. Schaefer Engineering & Consulting, P.A., signed & sealed by Warren Schaefer, P.E.
2. Anchor Calculations and structural analysis, dated 02/24/09, prepared by W.W. Schaefer Engineering & Consulting, P.A., signed & sealed by Warren Schaefer, P.E. (transferred from file # **09-0305.02**)
3. Glazing complies w/ ASTME-1300-02 & -04

D. QUALITY ASSURANCE

1. Miami Dade Department of Permitting, Environment, and Regulatory Affairs (PERA).

E. MATERIAL CERTIFICATIONS

1. Notice of Acceptance No. **11-0325.05** issued to Solutia, for "Saflex clear & color interlayer", expiring on 05/21/2016.

F. STATEMENTS

1. Letter of conformance to FBC 2007 & "No financial interest" dated February 24, 2009, signed and sealed by Warren Schaefer, P.E.
2. Laboratory Statement of compliance, part of the test reports.
3. Distribution agreement between KML Window Inc, Ontario, Canada and Andresen Window Inc., Minnesota, USA signed by Derek Gunn, plant Manager and Allan E. Bernick, senior V.P., respectively on behalf of their companies.

G. OTHER

1. This NOA **revises** NOA # **09-0305.02**, expiring April 26, 2014.
2. Test proposal # **02-0776** dated Dec 02, 2002, approved by BCCO.

Ishaq I. Chanda

Ishaq I. Chanda, P.E.
Product Control Examiner
NOA No 11-1014.07
Expiration Date: April 26, 2014
Approval Date: January 19, 2012

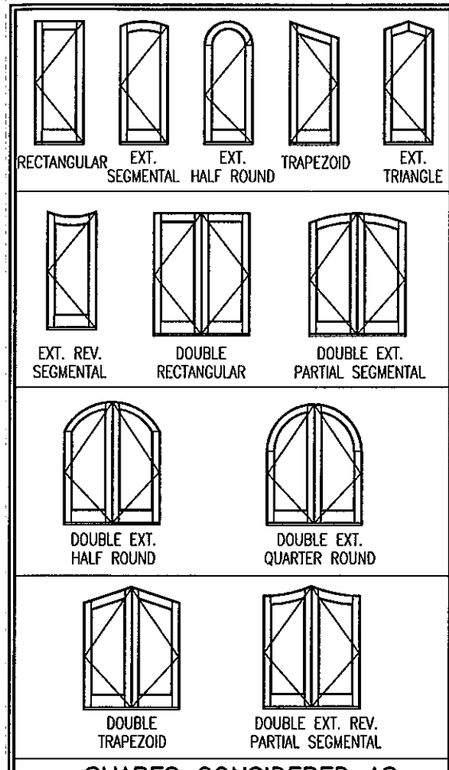

SHAPES CONSIDERED AS PART OF THIS APPROVAL

NOTE: FOR COMBINATION OF UNITS. SEE MULLION DRAWING NO. 1003E & 1003F UNDER SEPARATE APPROVAL

ALLOWABLE DESIGN LOADS
+65 PSF/−70 PSF

FOR JAMB FASTENER EMBED & EDGE DISTANCE REQUIREMENTS SEE SHEET 3

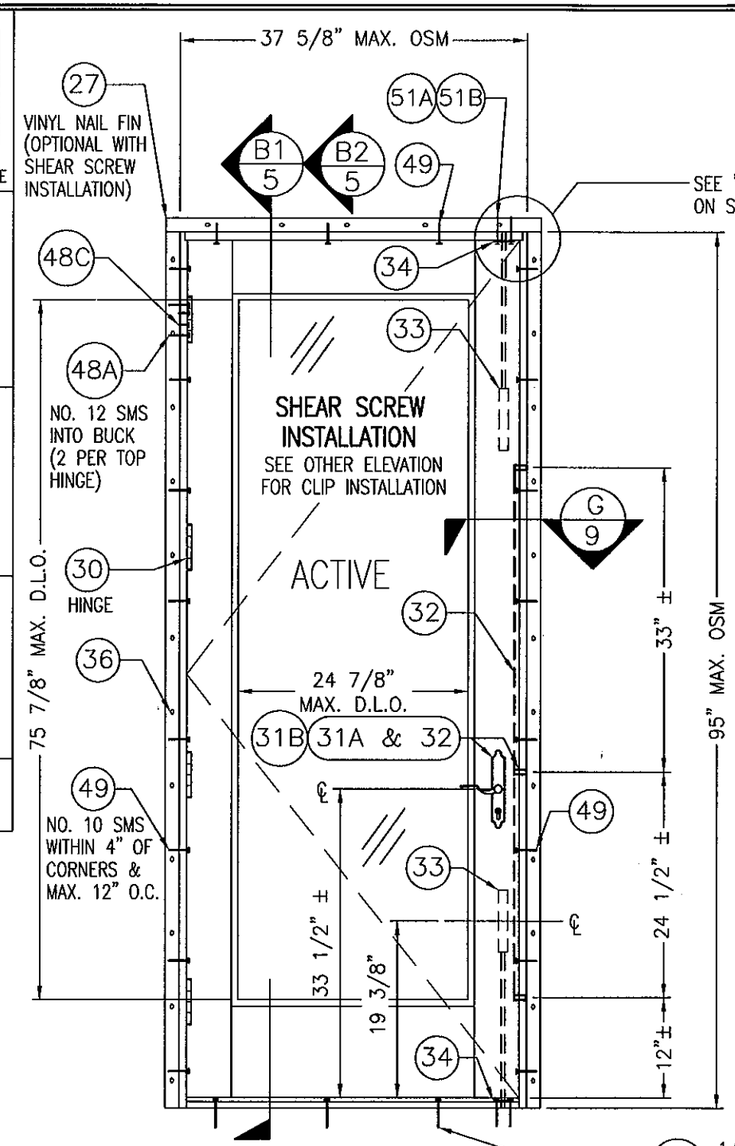

EXTERIOR ELEVATION
SINGLE RECTANGULAR FRENCH DOOR
SCALE: 3/4"=1'-0"

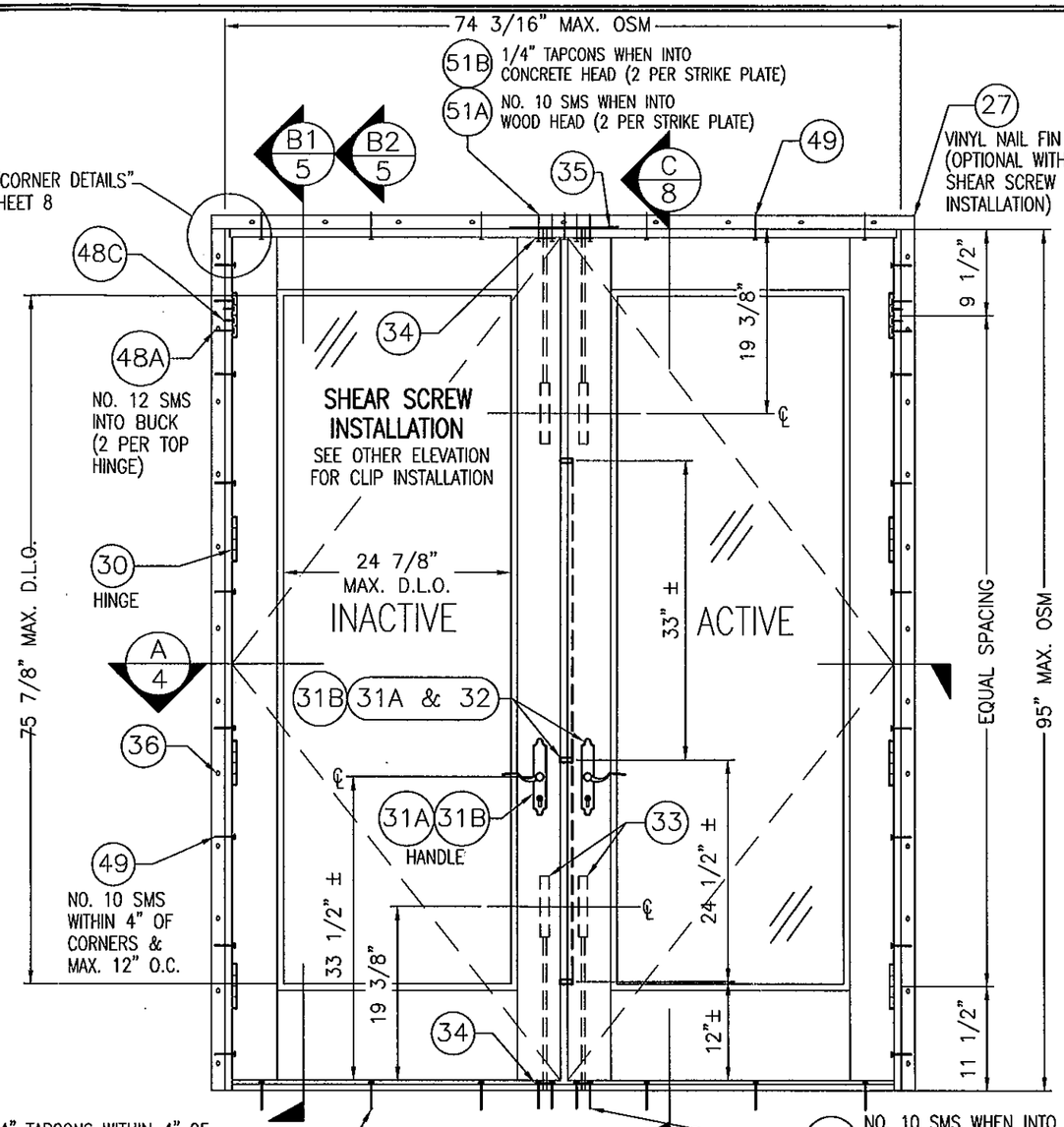

EXTERIOR ELEVATION
DOUBLE RECTANGULAR FRENCH DOOR
SCALE: 3/4"=1'-0"

GENERAL NOTES:

1. THESE DOOR SYSTEMS HAVE BEEN TESTED, ANALYZED & APPROVED FOR DESIGN PRESSURES NOT TO EXCEED THOSE SHOWN IN THE "ALLOWABLE DESIGN PRESSURE TABLE(S).
2. OPENINGS, BUCKING & BUCKING FASTENERS MUST BE PROPERLY DESIGNED & INSTALLED TO TRANSFER WIND LOADS TO THE STRUCTURE.
3. ALL HARDWARE & FASTENERS SHALL BE IN ACCORDANCE WITH THESE DRAWINGS & SHALL NOT VARY UNLESS SPECIFICALLY MENTIONED ON THE DRAWINGS. SPECIFIED ANCHOR EMBED TO BASE MATERIAL SHALL BE BEYOND WALL FINISH OR STUCCO.
4. THE DETAILS & SPECIFICATIONS SHOWN HEREIN REPRESENT THE PRODUCTS TESTED & PROPOSED FOR WATER, AIR, IMPACT, CYCLIC & UNIFORM STATIC AIR PRESSURE TESTING IN CONFORMANCE WITH THE FLORIDA BUILDING CODE PROTOCALS TAS-201, 202 & 203 FOR LARGE MISSILE IMPACT DOORS.
5. THESE DOOR SYSTEMS HAVE BEEN DESIGNED IN ACCORDANCE WITH AND MEET THE REQUIREMENTS OF THE FLORIDA BUILDING CODE (FBC) INCLUDING HIGH VELOCITY HURRICANE ZONES (HVHZ).
6. IMPACT SHUTTERS ARE NOT REQUIRED WITH THESE DOORS.
7. ALL ANCHORS SECURING DOOR FRAME TO PRESSURE TREATED BUCKS OR WOOD FRAMING SHALL BE CAPABLE OF RESISTING CORROSION CAUSED BY THE PRESSURE TREATING CHEMICALS IN THE WOOD.
8. DETERMINE THE POSITIVE & NEGATIVE DESIGN LOADS TO USE WHEN REFERENCING THESE DOCUMENTS IN ACCORDANCE WITH THE GOVERNING CODE AND GOVERNING WIND VELOCITY. FOR WIND LOAD CALCULATIONS IN ACCORDANCE WITH THE FLORIDA BUILDING CODE, A DIRECTIONALITY FACTOR OF Kd = 0.85 MAY BE APPLIED WHEN USED PER THE ASCE 7 STANDARD.
9. NO INCREASE IN ALLOWABLE STRESS HAS BEEN USED IN THE CERTIFICATION OF THIS PRODUCT. WIND LOAD DURATION FACTOR Cd = 1.6 WAS USED FOR WOOD SCREW ANALYSIS ONLY.
10. MATERIALS, INCLUDING BUT NOT LIMITED TO STEEL SCREWS, THAT COME INTO CONTACT WITH OTHER DISSIMILAR MATERIALS SHALL MEET THE REQUIREMENTS OF FLORIDA BUILDING CODE CHAPTER 20.
11. All WOOD MEMBERS OF DOORS THAT MAY POSSIBLY COME INTO CONTACT WITH MASONRY OR CONCRETE SUBSTRATES, ARE SUBJECT TO MOISTURE &/OR ARE SUBJECT TO THE OUTSIDE ENVIRONMENT SHALL BE OF AN APPROVED DURABLE SPECIES OR BE TREATED IN AN APPROVED METHOD WITH AN APPROVED PRESERVATIVE PER FBC SECTION 2326.

PRODUCT REVISED
as complying with the Florida
Building Code
Acceptance No. 11-1014.07
Expiration Date 04/26/2014
By Richard L. Hand
Chief, Bldg. Product Control

THESE DRAWINGS ARE APPLICABLE ONLY TO THE PRODUCT SPECIFIED. THEY MAY NOT BE USED FOR THE ASSEMBLY AND/OR INSTALLATION OF ANY OTHER PRODUCT NOR MAY THEY BE USED FOR RATIONAL AND/OR LOCAL APPROVAL OF ANY PRODUCT NOT PRODUCED BY THE MANUFACTURER STATED ON THESE DRAWINGS.

WARREN W. SCHAEFER LICENSE No. 44135 STATE OF FLORIDA PROFESSIONAL ENGINEER

DRAWN BY: K.P.S.	CHECKED BY: W.W.S.
PLOT: 1=16	DATE: 05/13/03

NO.	REVISION DESCRIPTION	BY	DATE
A1	UPDATE TO CURRENT FBC	WRM	02/24/09
B1	UPDATE CONSULTANTS ADDRESS	WRM	10/11/11

DRAWING TITLE
ALUMINUM CLAD WOOD FRENCH IMPACT DOORS

MANUFACTURER
KML WINDOWS, INC.
71 SECOND STREET
STRATHROY, ONTARIO, CANADA N7G 3H8
(519) 245-2270

CONSULTANTS
W. W. SCHAEFER ENGINEERING & CONSULTING, P.A. (CA 6809)
7480 150TH COURT NORTH
PALM BEACH GARDENS, FL 33418
PHONE: 561-744-3424

CERTIFICATION
OCT 12 2011
WARREN W. SCHAEFER, P.E.
P.E. NO. 44135

DRAWING NO. 1228A
REV. B
SHEET NO. 1 OF 12

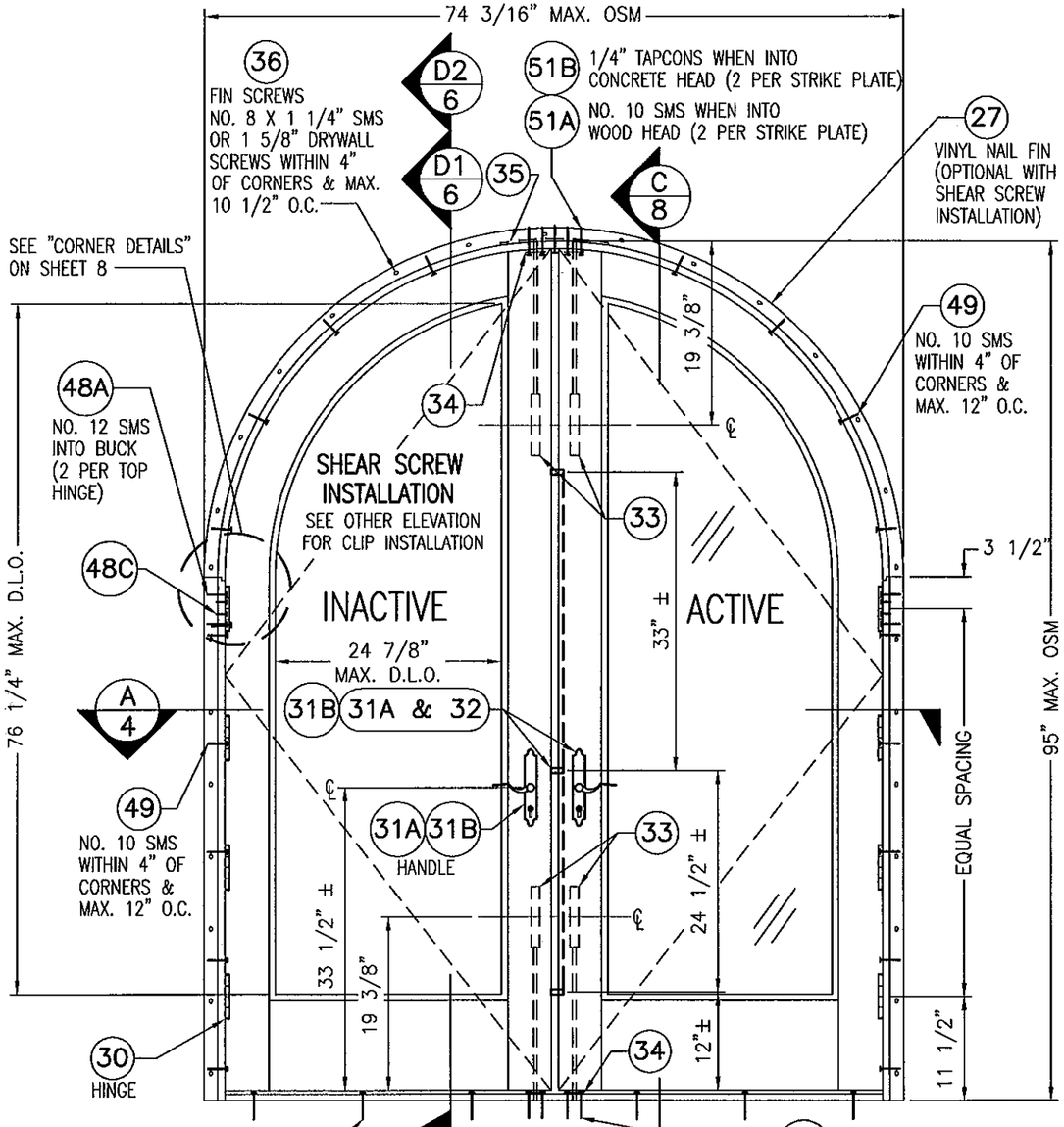

EXTERIOR ELEVATION
DOUBLE EXTENDED QUARTER ROUND
SCALE: 3/4"=1'-0"

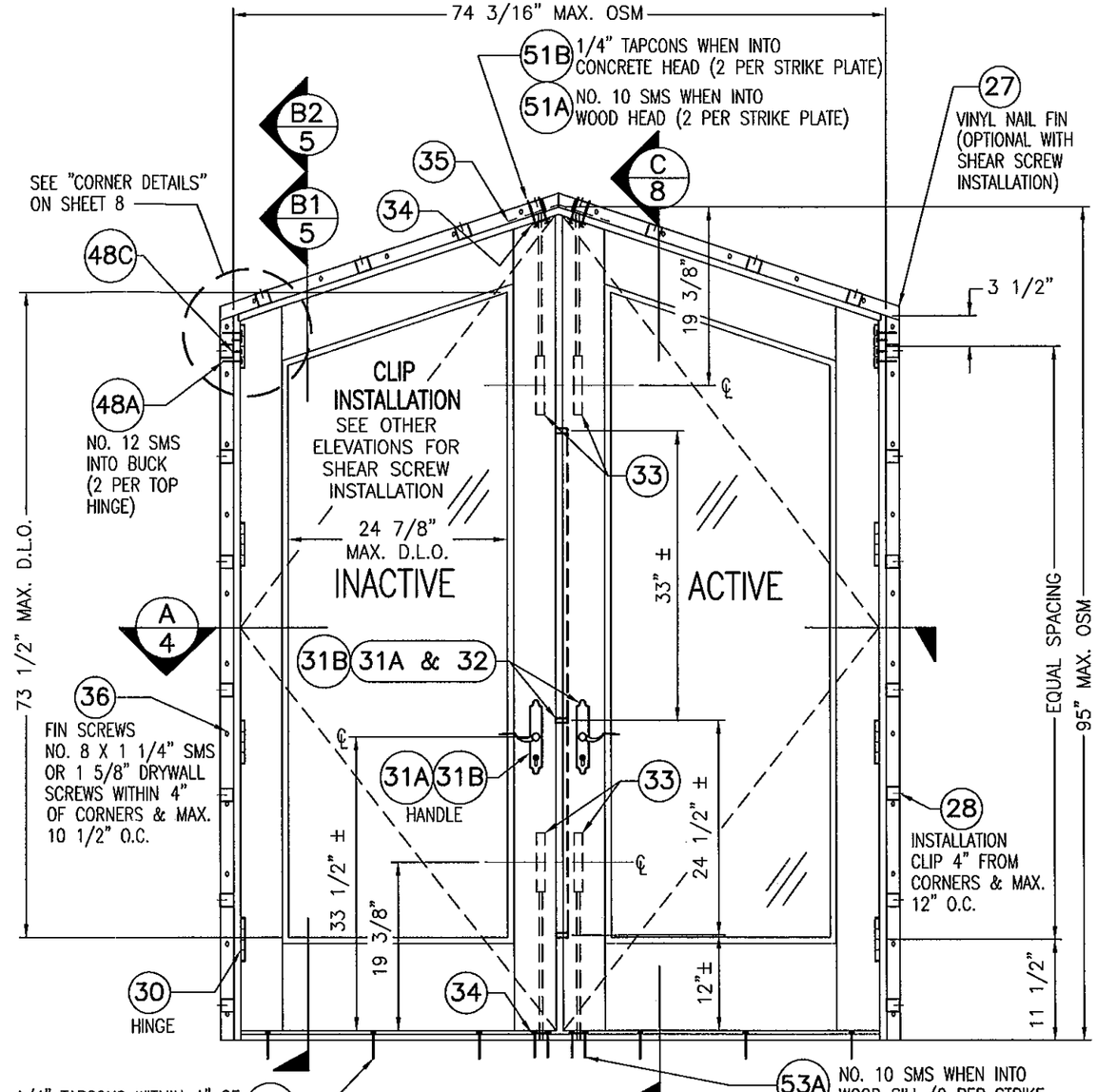

EXTERIOR ELEVATION
DOUBLE TRAPEZOID FRENCH DOOR
SCALE: 3/4"=1'-0"

NOTE: FOR COMBINATION OF UNITS. SEE MULLION DRAWING NO. 1003E & 1003F UNDER SEPARATE APPROVAL

ALLOWABLE DESIGN LOADS
+65 PSF/-70 PSF

FOR JAMB FASTENER EMBED & EDGE DISTANCE REQUIREMENTS SEE SHEET 3

PRODUCT REVISED
as complying with the Florida
Building Code
Acceptance No. 11-1014.07
Expiration Date 04/26/14
By Ishag I. Chanda
Miami Dade Product Control

WARREN W. SCHAEFER ★ LICENSE No. 44135 ★ STATE OF FLORIDA ★ PROFESSIONAL ENGINEER

DRAWN BY: K.P.S.	CHECKED BY: W.W.S.
PLOT: 1=16	DATE: 05/13/03

NO.	REVISION DESCRIPTION	BY	DATE

DRAWING TITLE
ALUMINUM CLAD WOOD FRENCH IMPACT DOORS

MANUFACTURER
KML WINDOWS, INC.
71 SECOND STREET
STRATHROY, ONTARIO, CANADA N7G 3H8
(519) 245-2270

CONSULTANTS
W. W. SCHAEFER ENGINEERING & CONSULTING, P.A. (CA 6809)
7480 150TH COURT NORTH
PALM BEACH GARDENS, FL 33418
PHONE: 561-744-3424

CERTIFICATION
OCT 12 2011
WARREN W. SCHAEFER, P.E.
P.E. NO. 44135

DRAWING NO. 1228A
REV. B
SHEET NO. 2 OF 12

ALLOWABLE DESIGN LOADS
+65 PSF/−70 PSF

NOTE: FOR COMBINATION OF UNITS. SEE MULLION DRAWING NO. 1003E & 1003F UNDER SEPARATE APPROVAL

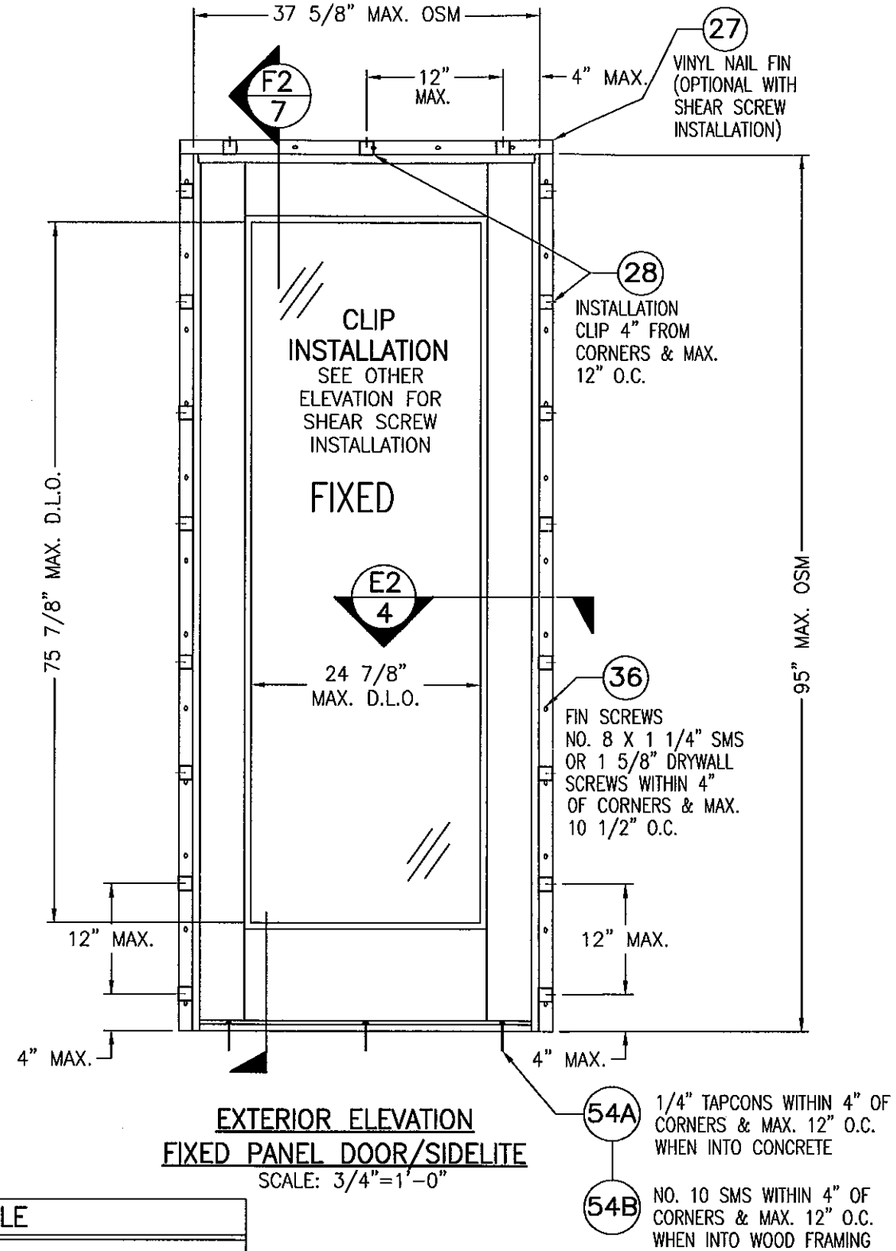

EXTERIOR ELEVATION
FIXED PANEL DOOR/SIDELITE
SCALE: 3/4"=1'-0"

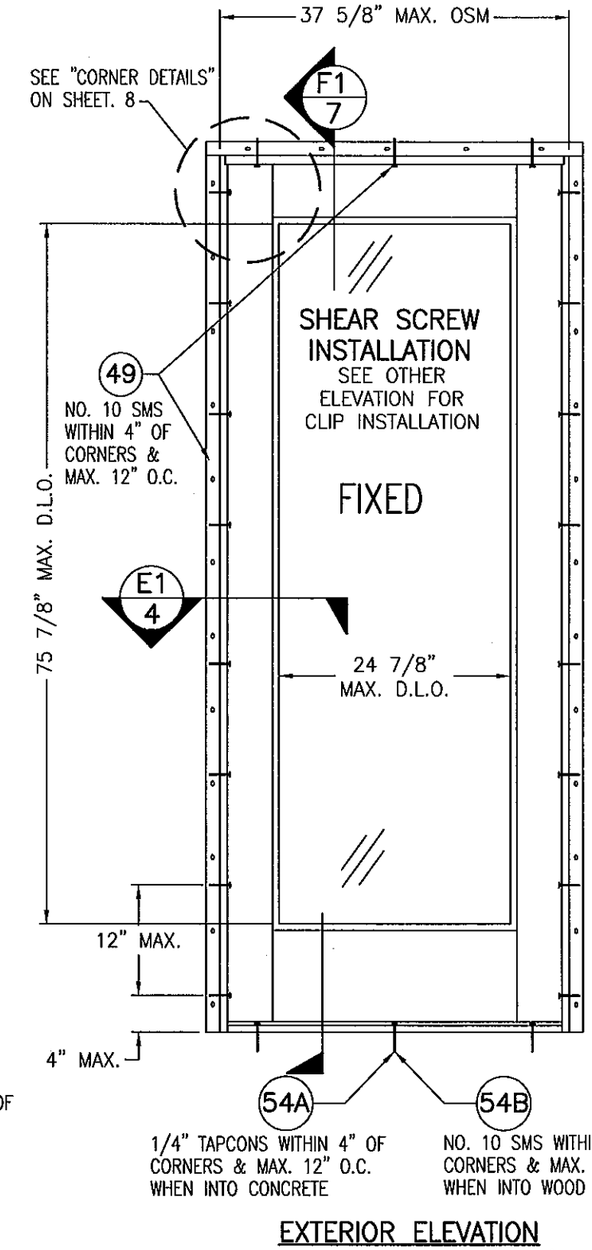

EXTERIOR ELEVATION
FIXED PANEL DOOR/SIDELITE
SCALE: 3/4"

FRAME ANCHOR REQUIREMENTS TABLE

FRAME SHEAR SCREWS			
OPENING TYPE (SUBSTRATE)	FRAME TO OPENING FASTENER TYPE	MINIMUM EMBED	MINIMUM EDGE DIST.
MIN. 2X4 WOOD FRAME OR BUCK (MIN. GR. 3 & G=0.55)	NO. 10 SMS OR WOOD SCREW	1 1/4"	3/4"
(1) C-90 CMU	(2) 1/4" CONCRETE SCREW	1 1/4"	2"
2500 PSI CONCRETE	(2) 1/4" CONCRETE SCREW	1 1/2"	2 1/2"

(1) CMU IS NOT APPLICABLE AT HEAD & SILL

(2) CONCRETE SCREWS SHALL BE ELCO ULTRACONS, ITW RAMSET/RED HEAD TAPCONS, HILTI KWIK-CON II OR POWERS RAWL TAPPER (HARDENED STEEL OR S.S.).

PRODUCT REVISED
as complying with the Florida Building Code
Acceptance No. 11-1014.07
Expiration Date 4/26/14
By [signature]
Miami-Dade Product Control

WARREN W. SCHAEFER LICENSE No. 44135 STATE OF FLORIDA PROFESSIONAL ENGINEER

DRAWN BY: K.P.S.	CHECKED BY: W.W.S.
PLOT: 1=16	DATE: 05/13/03

NO.	REVISION DESCRIPTION	BY	DATE

DRAWING TITLE
ALUMINUM CLAD WOOD FRENCH IMPACT DOORS

MANUFACTURER
KML WINDOWS, INC.
71 SECOND STREET
STRATHROY, ONTARIO, CANADA N7G 3H8
(519) 245-2270

CONSULTANTS
W. W. SCHAEFER ENGINEERING & CONSULTING, P.A. (CA 6809)
7480 150TH COURT NORTH
PALM BEACH GARDENS, FL 33418
PHONE: 561-744-3424

CERTIFICATION
OCT 12 2011
WARREN W. SCHAEFER, P.E.
P.E. NO. 44135

DRAWING NO. 1228A
REV. B
SHEET NO. 3 OF 12

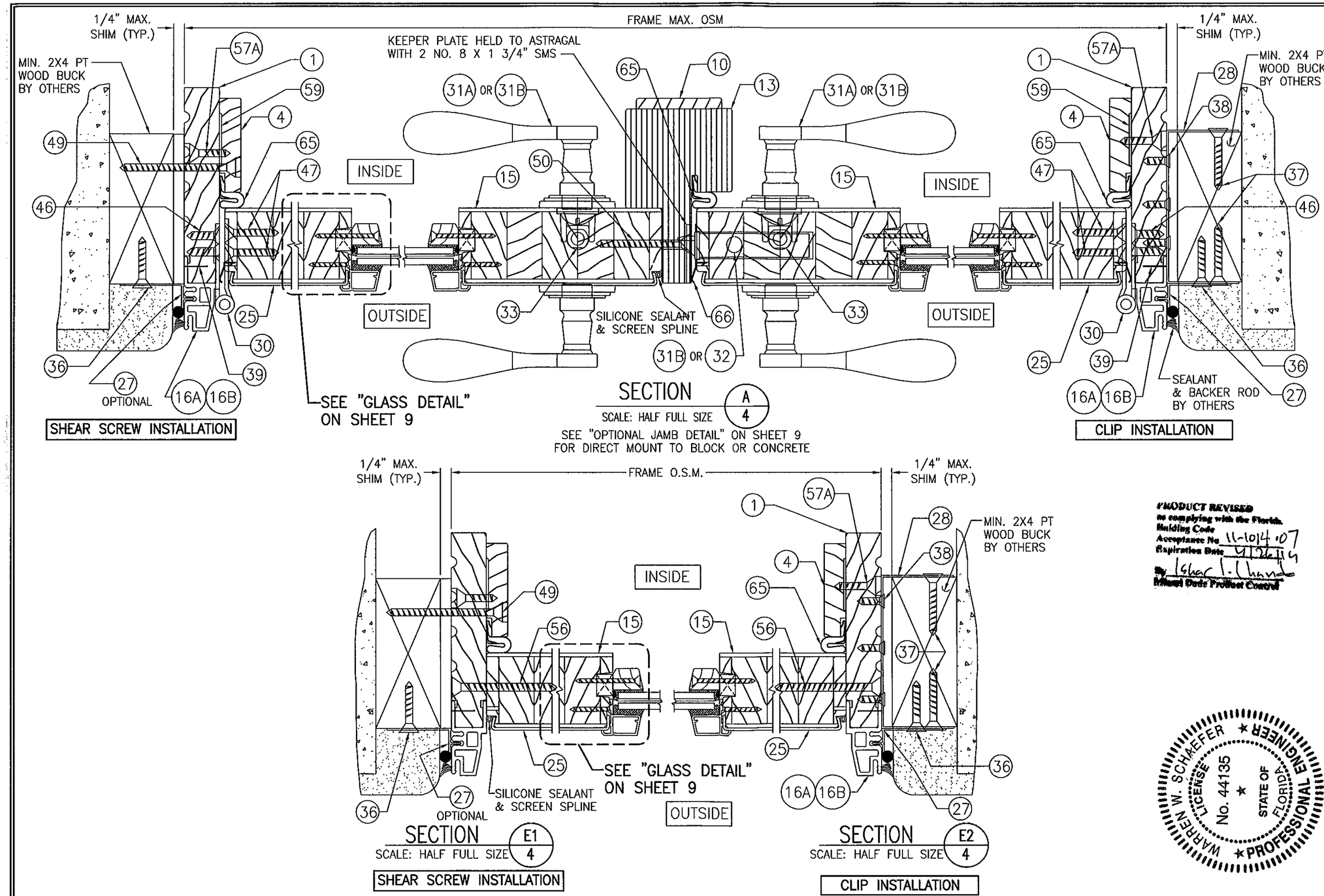

SECTION A/4

SCALE: HALF FULL SIZE

SEE "OPTIONAL JAMB DETAIL" ON SHEET 9 FOR DIRECT MOUNT TO BLOCK OR CONCRETE

SECTION E1/4

SCALE: HALF FULL SIZE

SHEAR SCREW INSTALLATION

SECTION E2/4

SCALE: HALF FULL SIZE

CLIP INSTALLATION

PRODUCT REVISED
as complying with the Florida Building Code
Acceptance No. 11-1014.07
Expiration Date 4/26/14
By Ishar I. Chando
Miami Dade Product Control

WARREN W. SCHAEFER ★ LICENSE No. 44135 ★ STATE OF FLORIDA ★ PROFESSIONAL ENGINEER

DRAWN BY: K.P.S.	CHECKED BY: W.W.S.
PLOT: 1=2	DATE: 05/13/03

NO.	REVISION DESCRIPTION	BY	DATE

DRAWING TITLE
ALUMINUM CLAD WOOD FRENCH IMPACT DOORS

MANUFACTURER
KML WINDOWS, INC.
71 SECOND STREET
STRATHROY, ONTARIO, CANADA N7G 3H8
(519) 245-2270

CONSULTANTS
W. W. SCHAEFER ENGINEERING & CONSULTING, P.A. (CA 6809)
7480 150TH COURT NORTH
PALM BEACH GARDENS, FL 33418
PHONE: 561-744-3424

CERTIFICATION
OCT 12 2011
WARREN W. SCHAEFER, P.E.
P.E. NO. 44135

DRAWING NO. 1228A
REV. B
SHEET NO. 4 OF 12

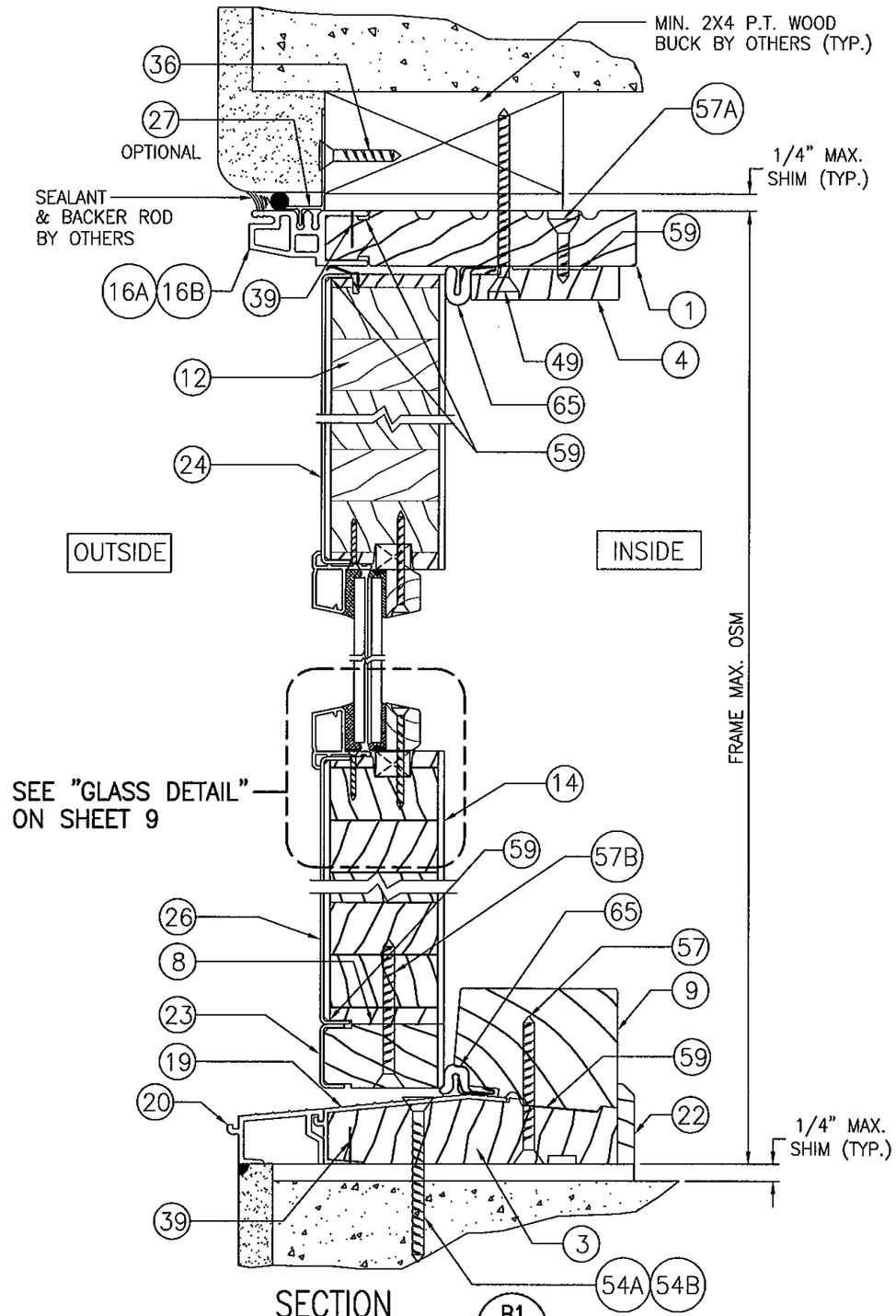

SECTION B1/5

SCALE: HALF FULL SIZE

SHEAR SCREW INSTALLATION

SEE "OPTIONAL JAMB DETAIL" ON SHEET 9 FOR DIRECT MOUNT TO BLOCK OR CONCRETE.

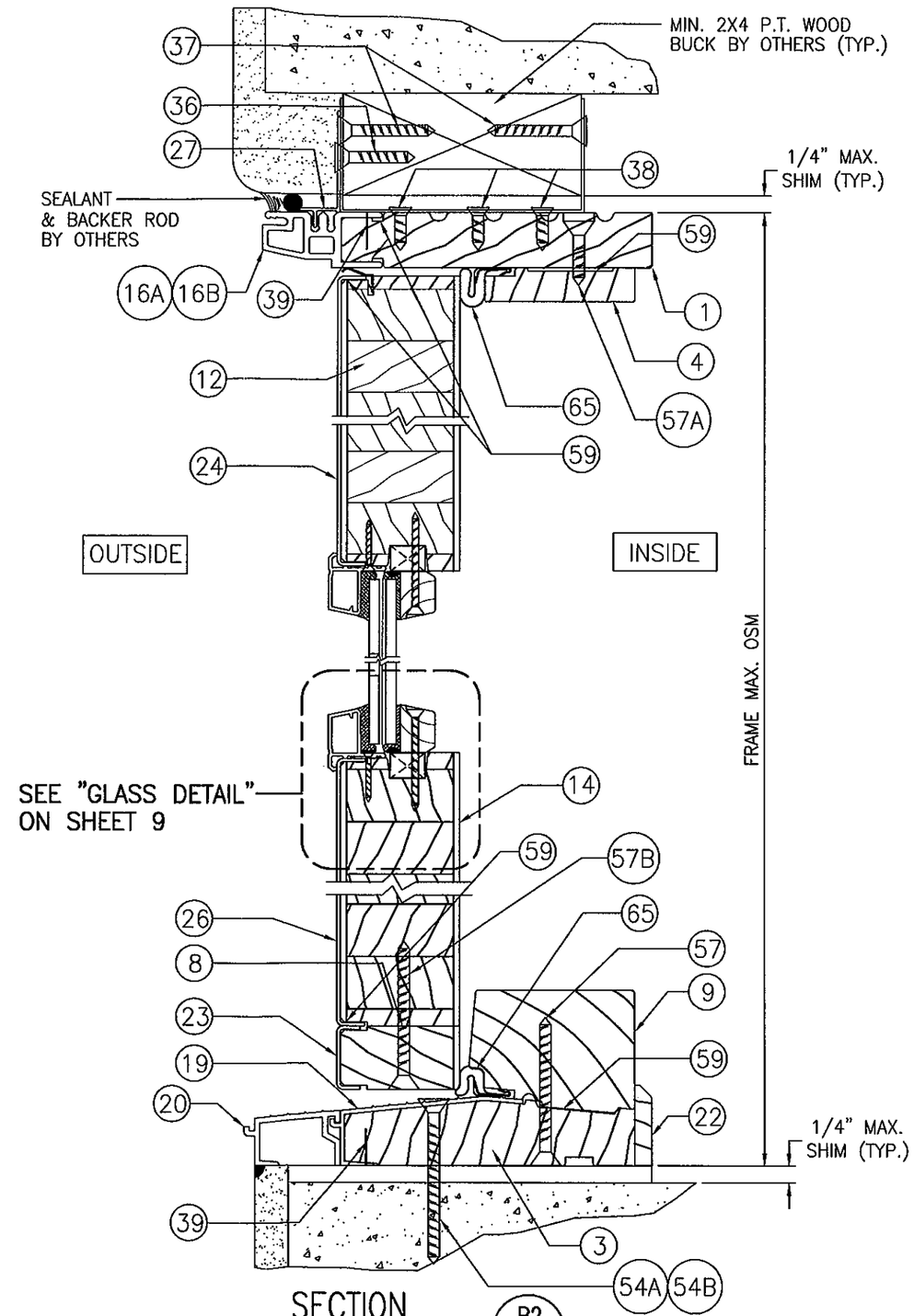

SECTION B2/5

SCALE: HALF FULL SIZE

CLIP INSTALLATION

PRODUCT REVISED
as complying with the Florida
Building Code
Acceptance No 11-1014.07
Expiration Date 4/26/14
By [signature]
Miami Dade Product Control

WARREN W. SCHAEFER ★ LICENSE No. 44135 ★ STATE OF FLORIDA ★ PROFESSIONAL ENGINEER

DRAWN BY: K.P.S.	CHECKED BY: W.W.S.
PLOT: 1=2	DATE: 05/13/03

NO.	REVISION DESCRIPTION	BY	DATE

DRAWING TITLE
ALUMINUM CLAD WOOD FRENCH IMPACT DOORS

MANUFACTURER
KML WINDOWS, INC.
71 SECOND STREET
STRATHROY, ONTARIO, CANADA N7G 3H8
(519) 245-2270

CONSULTANTS
W. W. SCHAEFER ENGINEERING & CONSULTING, P.A. (CA 6809)
7480 150TH COURT NORTH
PALM BEACH GARDENS, FL 33418
PHONE: 561-744-3424

CERTIFICATION
OCT 12 2011
WARREN W. SCHAEFER, P.E.
P.E. NO. 44135

DRAWING NO. 1228A
REV. B
SHEET NO. 5 OF 12

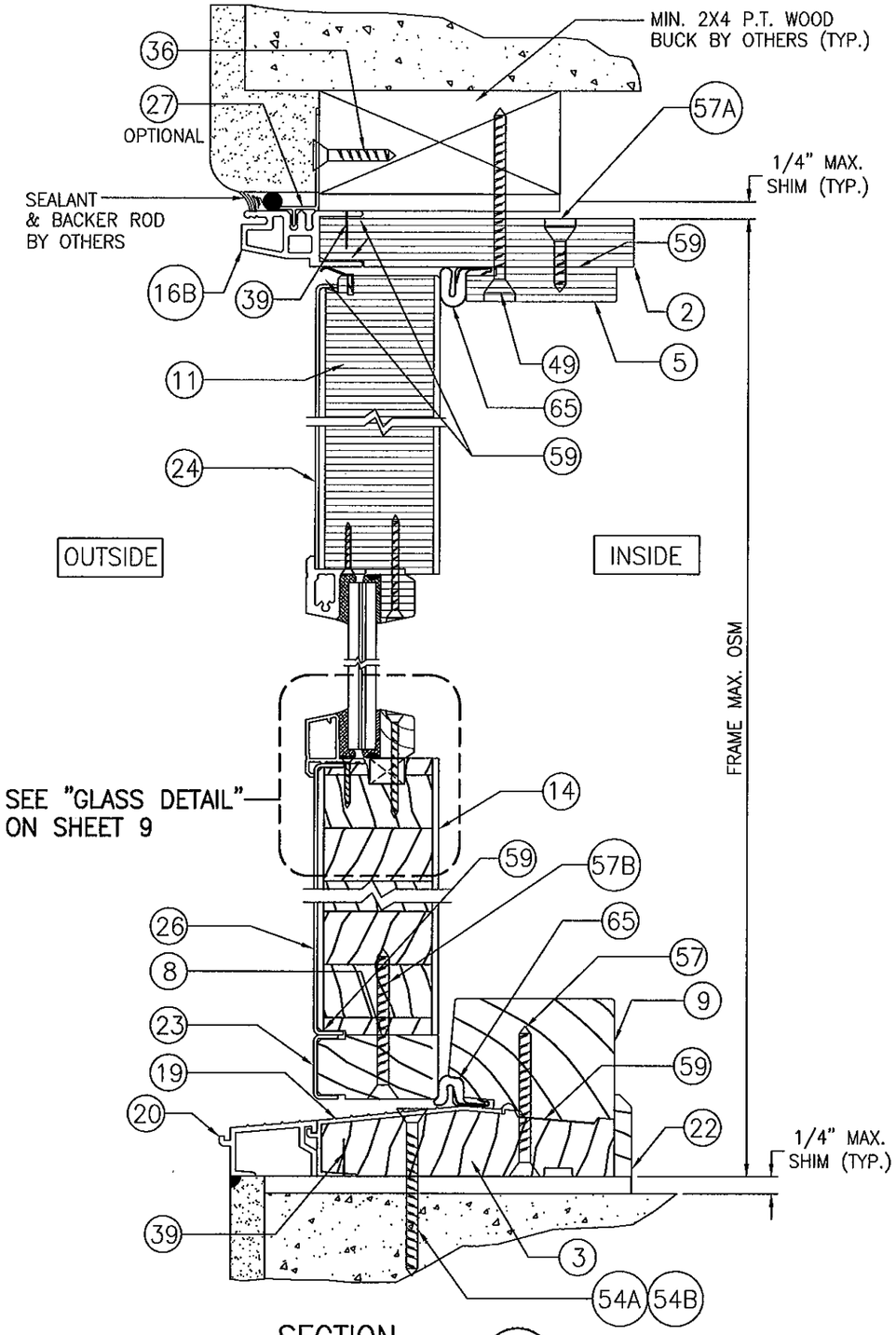

SECTION D1/6

SCALE: HALF FULL SIZE

SHEAR SCREW INSTALLATION

SEE "OPTIONAL JAMB DETAIL" ON SHEET 9 FOR DIRECT MOUNT TO BLOCK OR CONCRETE.

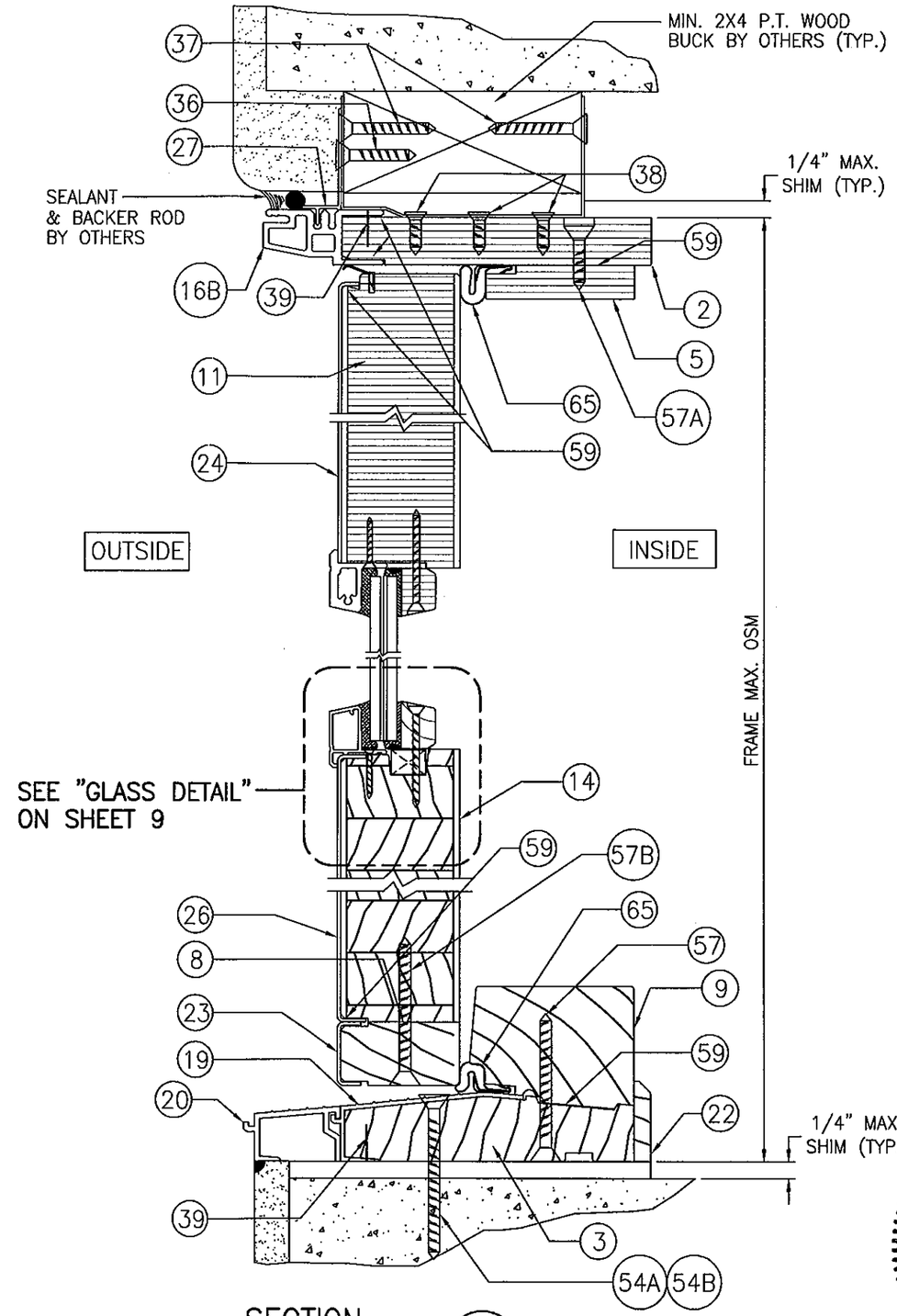

SECTION D2/6

SCALE: HALF FULL SIZE

CLIP INSTALLATION

PRODUCT REVISED
as complying with the Florida Building Code
Acceptance No. 11-1014.07
Expiration Date 4/26/2014
By Ishas J. Chand
Miami Dade Product Control

WARREN W. SCHAEFER ★ LICENSE No. 44135 ★ STATE OF FLORIDA ★ PROFESSIONAL ENGINEER

DRAWN BY: K.P.S.	CHECKED BY: W.W.S.
PLOT: 1=2	DATE: 05/13/03

NO.	REVISION DESCRIPTION	BY	DATE

DRAWING TITLE
ALUMINUM CLAD WOOD FRENCH IMPACT DOORS

MANUFACTURER
KML WINDOWS, INC.
71 SECOND STREET
STRATHROY, ONTARIO, CANADA N7G 3H8
(519) 245-2270

CONSULTANTS
W. W. SCHAEFER ENGINEERING & CONSULTING, P.A. (CA 6809)
7480 150TH COURT NORTH
PALM BEACH GARDENS, FL 33418
PHONE: 561-744-3424

CERTIFICATION
OCT 12 2011
WARREN W. SCHAEFER, P.E.
P.E. NO. 44135

DRAWING NO. 1228A
REV. B
SHEET NO. 6 OF 12

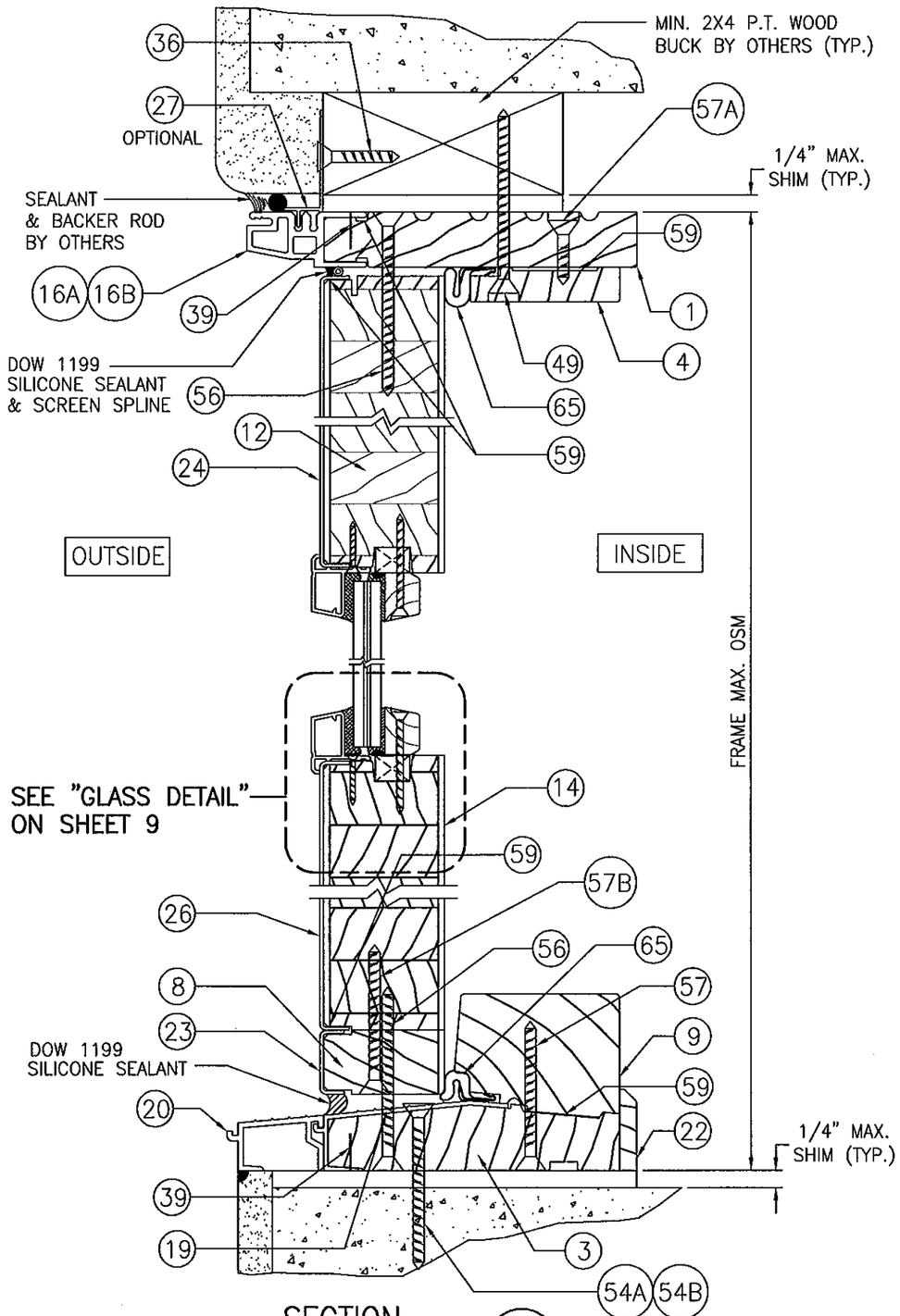

SECTION F1/7

SCALE: HALF FULL SIZE

SHEAR SCREW INSTALLATION

SEE "OPTIONAL JAMB DETAIL" ON SHEET 9 FOR DIRECT MOUNT TO BLOCK OR CONCRETE.

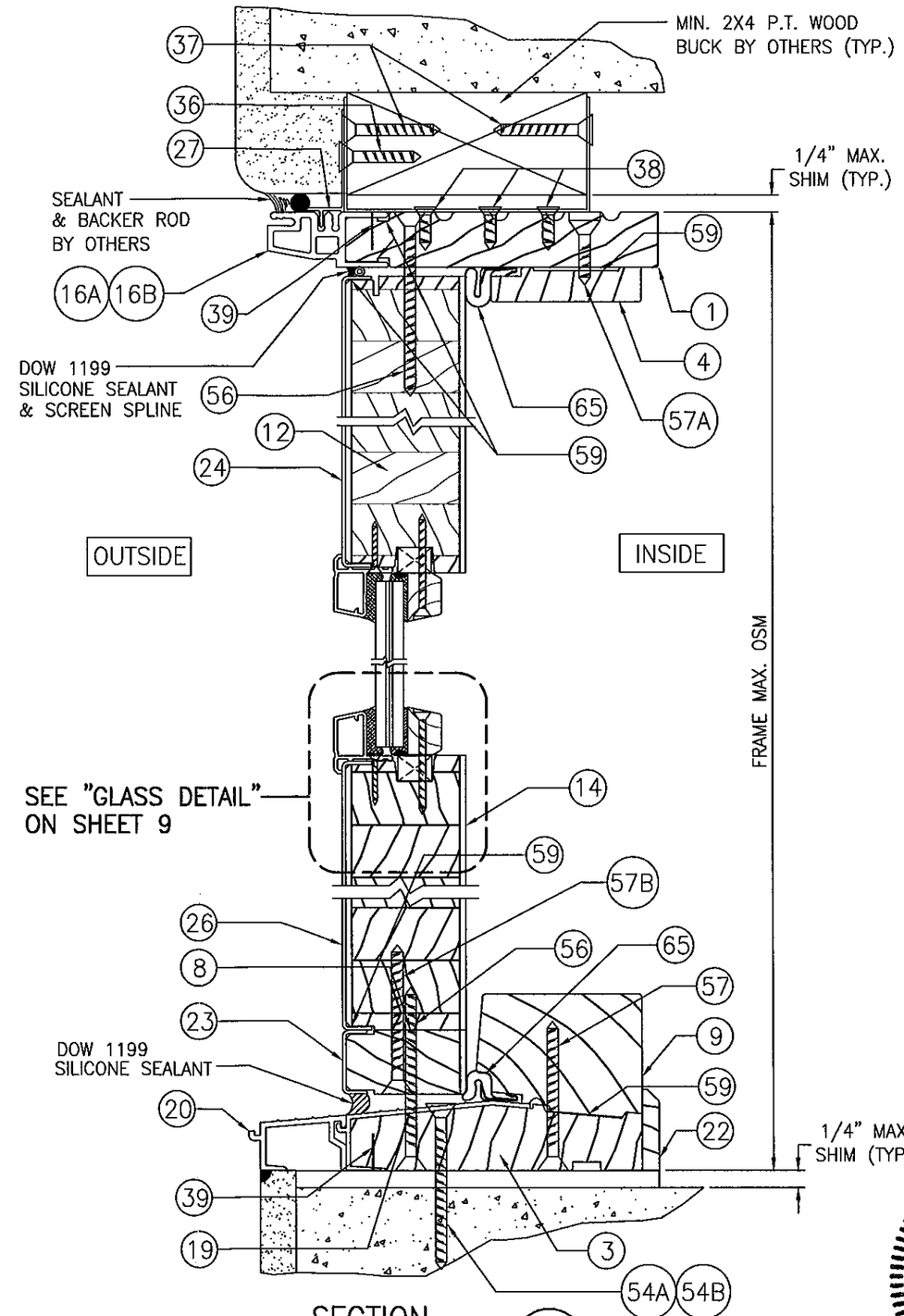

SECTION F2/7

SCALE: HALF FULL SIZE

SHEAR SCREW INSTALLATION

PRODUCT REVISED
as complying with the Florida Building Code
Acceptance No. 11-1014.07
Expiration Date 4/26/14
By Ishas Chand
Miami Dade Product Control

WARREN W. SCHAEFER ★ ENGINEER ★ No. 44135 ★ STATE OF FLORIDA ★ PROFESSIONAL ENGINEER

NO.	REVISION DESCRIPTION	BY	DATE

DRAWN BY: K.P.S. | CHECKED BY: W.W.S.
PLOT: 1=2 | DATE: 05/13/03

DRAWING TITLE
ALUMINUM CLAD WOOD FRENCH IMPACT DOORS

MANUFACTURER
KML WINDOWS, INC.
71 SECOND STREET
STRATHROY, ONTARIO, CANADA N7G 3H8
(519) 245-2270

CONSULTANTS
W. W. SCHAEFER ENGINEERING & CONSULTING, P.A. (CA 6809)
7480 150TH COURT NORTH
PALM BEACH GARDENS, FL 33418
PHONE: 561-744-3424

CERTIFICATION
OCT 12 2011
WARREN W. SCHAEFER P.E.
P.E. NO. 44135

DRAWING NO. 1228A | REV. B

SHEET NO. 7 OF 12

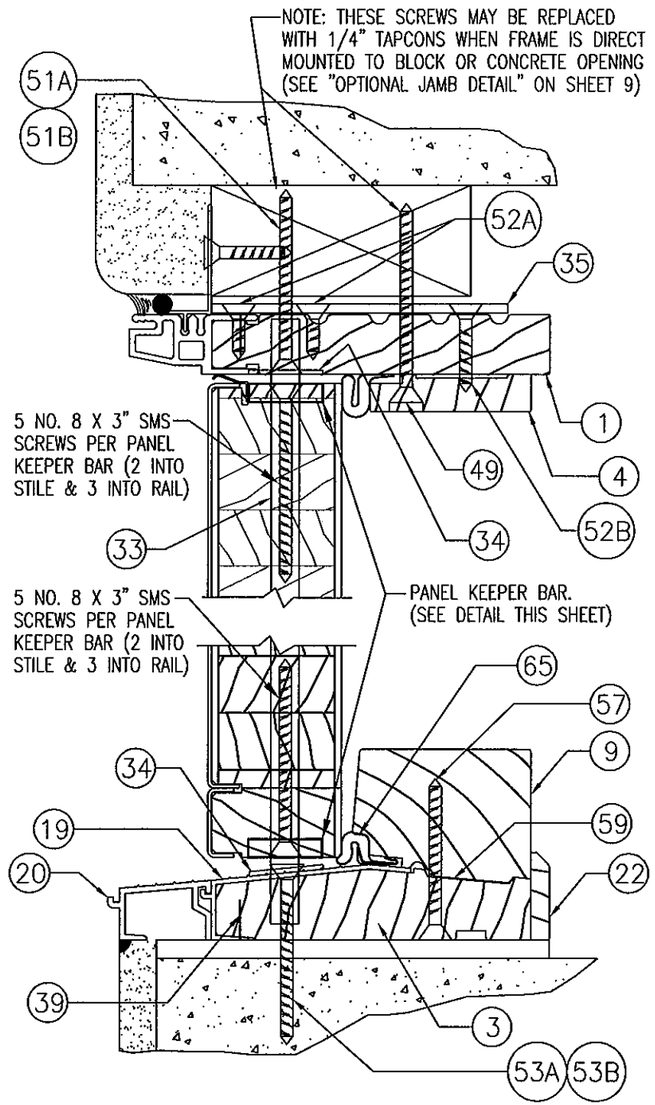

SECTION @ STRIKE PLATES (C/8)

SCALE: HALF FULL SIZE

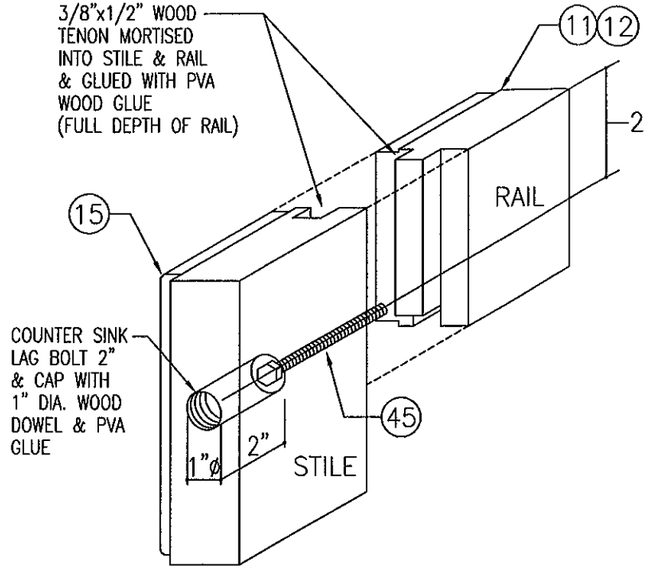

STILE TO TOP RAIL CORNER DETAIL

SCALE: N.T.S.

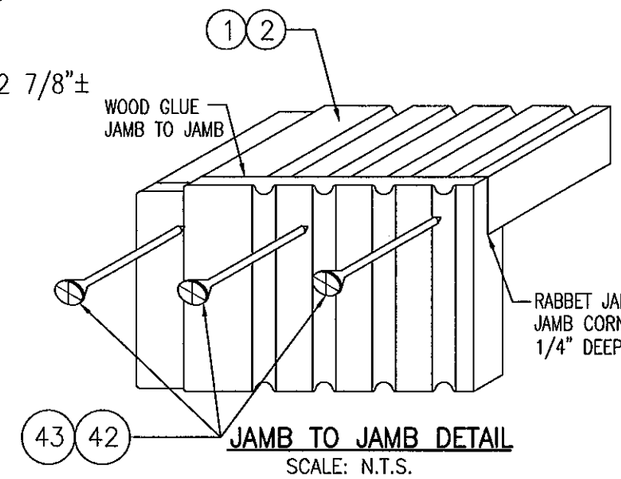

JAMB TO JAMB DETAIL

SCALE: N.T.S.

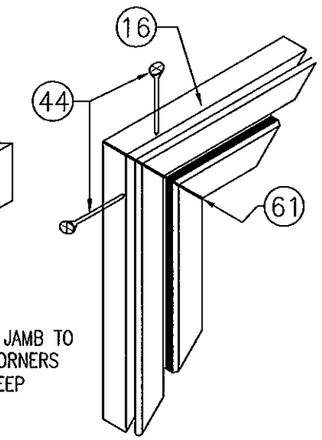

CLAD TO CLAD DETAIL

SCALE: N.T.S.

JAMB CORNER DETAILS

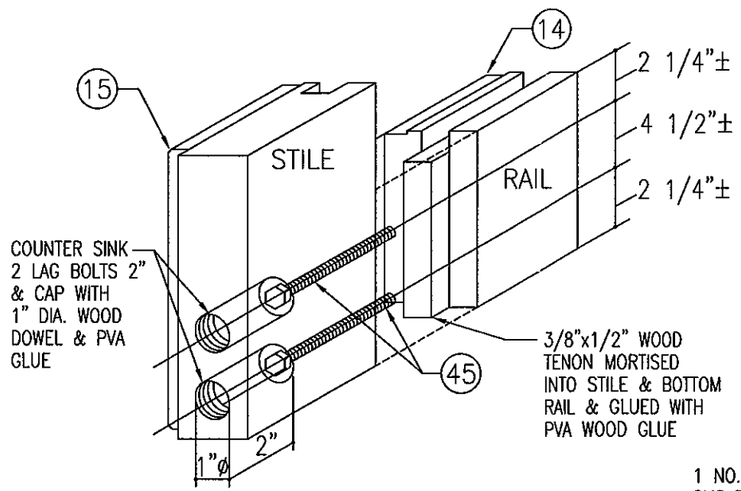

SASH STILE TO RAIL CORNER DETAIL

SCALE: N.T.S.

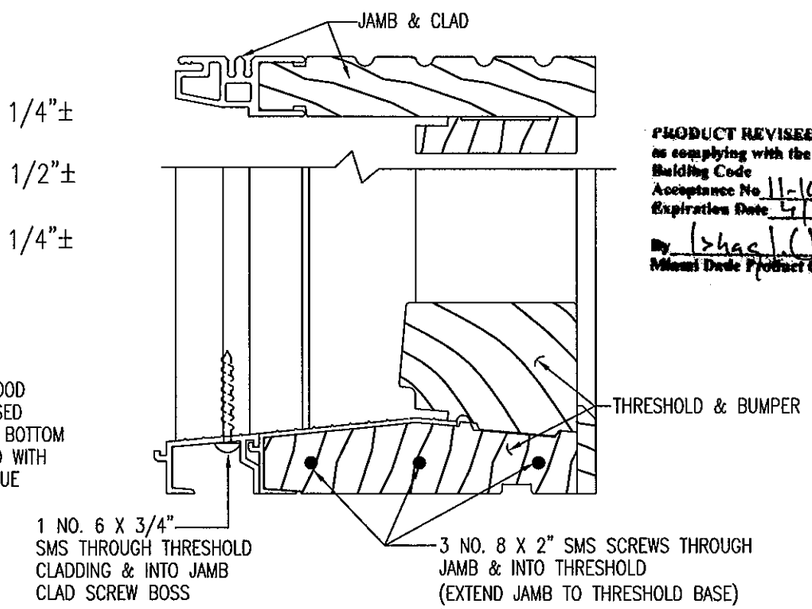

THRESHOLD TO JAMB CORNER DETAIL

PRODUCT REVISED
as complying with the Florida Building Code
Acceptance No 11-1014.07
Expiration Date 4/26/14
By Isaac J. Chandler
Miami Dade Product Control

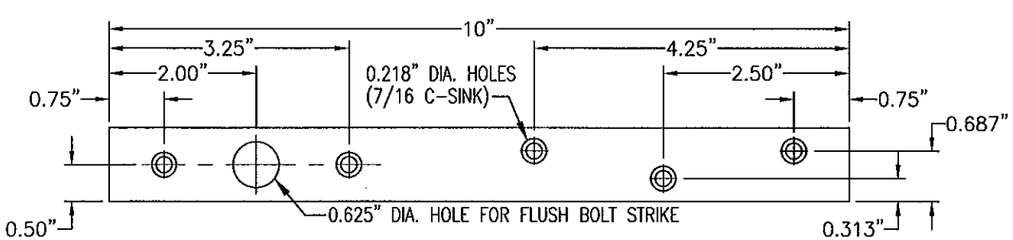

PANEL KEEPER BAR DETAIL

1/4" X 1" A36 STEEL NICKEL PLATED OR PAINTED BAR
SCALE: HALF FULL SIZE

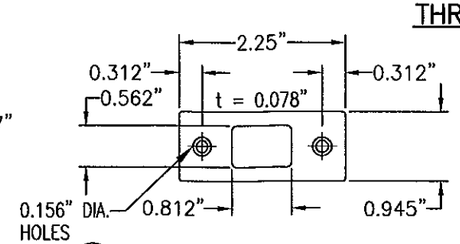

(34) **STRIKE PLATE DETAIL**

NICKEL PLATED STEEL
SCALE: HALF FULL SIZE

WARREN W. SCHAEFER ★ ENGINEER ★ LICENSE No. 44135 ★ STATE OF FLORIDA ★ PROFESSIONAL

DRAWN BY: K.P.S.	CHECKED BY: W.W.S.
PLOT: 1=2	DATE: 05/13/03

NO.	REVISION DESCRIPTION	BY	DATE

DRAWING TITLE
ALUMINUM CLAD WOOD FRENCH IMPACT DOORS

MANUFACTURER
KML WINDOWS, INC.
71 SECOND STREET
STRATHROY, ONTARIO, CANADA N7G 3H8
(519) 245-2270

CONSULTANTS
W. W. SCHAEFER ENGINEERING & CONSULTING, P.A. (CA 6809)
7480 150TH COURT NORTH
PALM BEACH GARDENS, FL 33418
PHONE: 561-744-3424

CERTIFICATION
OCT 12 2011
WARREN W. SCHAEFER, P.E.
P.E. NO. 44135

DRAWING NO.	REV.
1228A	B

SHEET NO. 8 OF 12

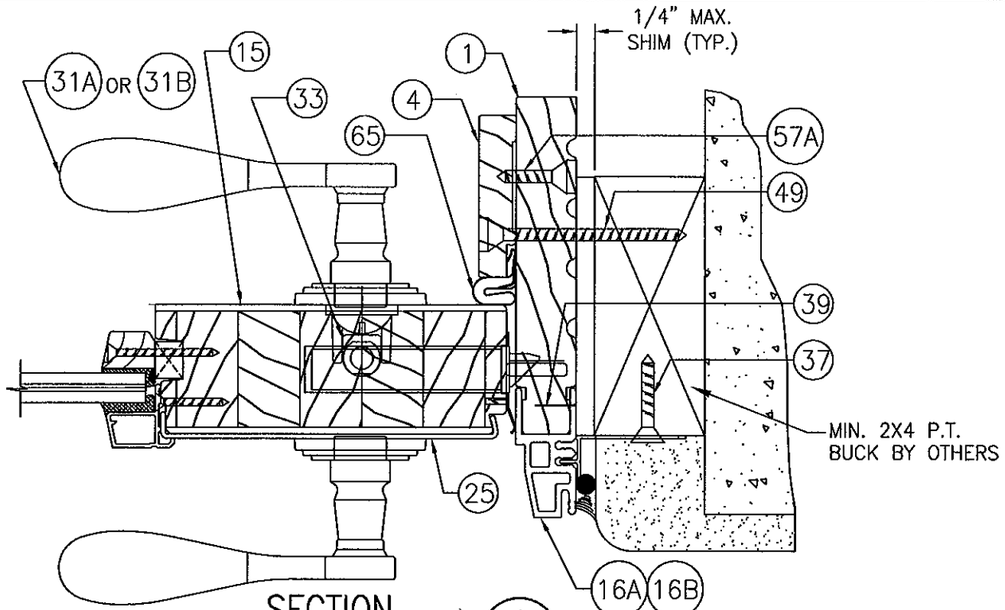

SECTION G/9

SCALE: HALF FULL SIZE

SIMILAR FOR CLIP MOUNT

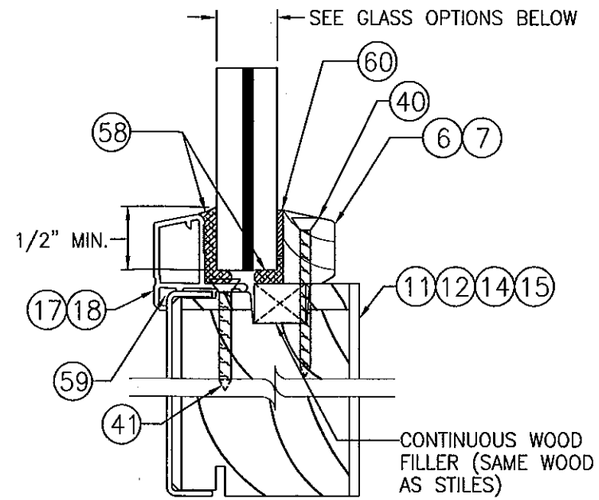

TYPICAL GLASS & GLAZING DETAIL

SCALE: 3/4 FULL SIZE

GLASS OPTION 1: 9/16" THICK LAMINATED GLASS WITH SAFLEX IIIG PVB (1/4" AN/0.09" PVB/1/4" AN)

GLASS OPTION 2: 3/8" THICK LAMINATED GLASS WITH SAFLEX IIIG PVB (5/32" AN/0.09" PVB/5/32" AN)

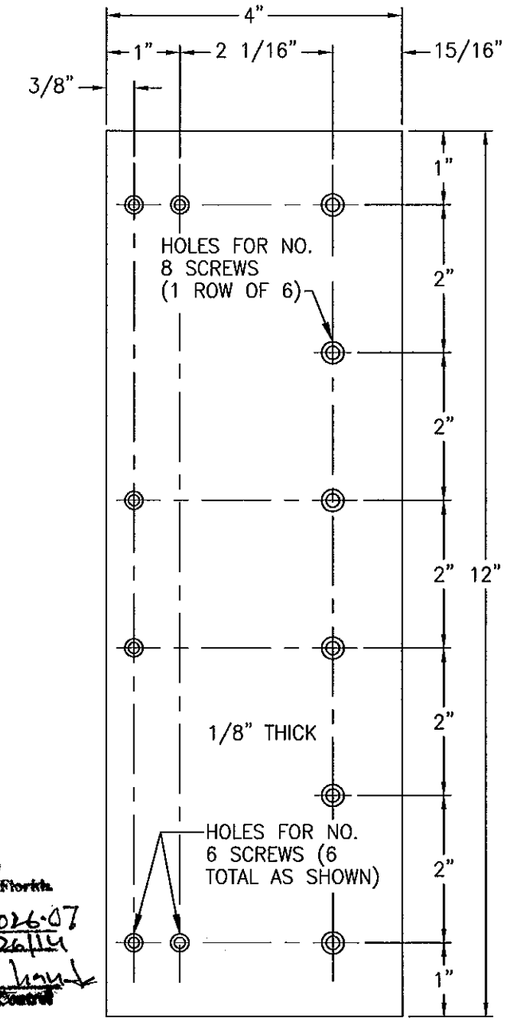

(35) STRIKE PLATE DETAIL

NICKEL PLATED OR PAINTED A446 GRADE A STEEL

SCALE: HALF FULL SIZE

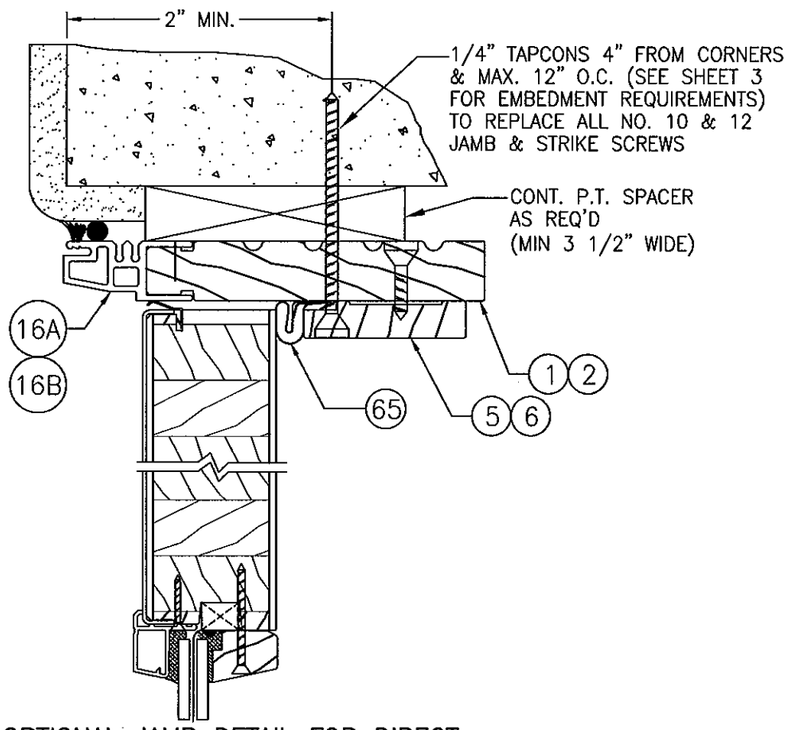

OPTIONAL JAMB DETAIL FOR DIRECT MOUNT TO CONCRETE OR BLOCK

(TYP. ALL UNITS)

SCALE: 1/2 FULL SIZE

PRODUCT REVISED
as complying with the Florida
Building Code
Acceptance No. 11-1026.07
Expiration Date 4/26/14
By [illegible]
Miami-Dade Product Control

WARREN W. SCHAEFER LICENSE No. 44135 STATE OF FLORIDA PROFESSIONAL ENGINEER

NO.	REVISION DESCRIPTION	BY	DATE

DRAWN BY: K.P.S. | CHECKED BY: W.W.S.
PLOT: 1=2 | DATE: 05/13/03

DRAWING TITLE: ALUMINUM CLAD WOOD FRENCH IMPACT DOORS

MANUFACTURER: KML WINDOWS, INC.
71 SECOND STREET
STRATHROY, ONTARIO, CANADA N7G 3H8
(519) 245-2270

CONSULTANTS: W. W. SCHAEFER ENGINEERING & CONSULTING, P.A. (CA 6809)
7480 150TH COURT NORTH
PALM BEACH GARDENS, FL 33418
PHONE: 561-744-3424

CERTIFICATION
OCT 18 2011
WARREN W. SCHAEFER, P.E.
P.E. NO. 44135

DRAWING NO. 1228A | REV. B
SHEET NO. 9 OF 12

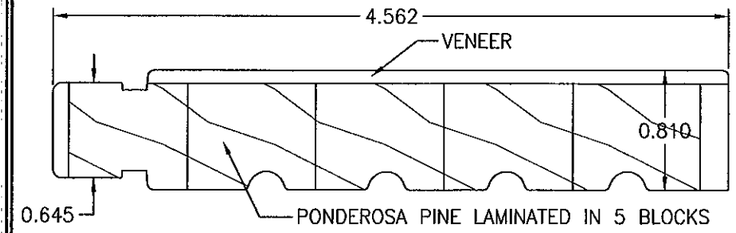

1 LINEAL WOOD FRAME JAMB
(PONDEROSA PINE)

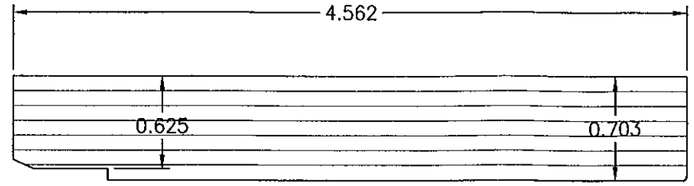

2 RADIAL WOOD FRAME JAMB
(LAMINATED VENEER)

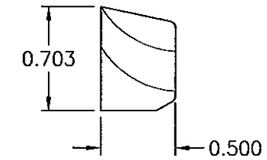

6 LINEAL WOOD GLAZING STOP
(PONDEROSA PINE)

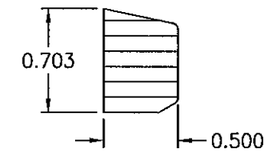

7 RADIAL WOOD GLAZING STOP
(LAMINATED VENEER)

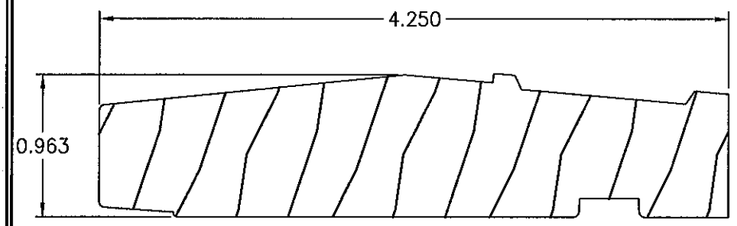

3 WOOD SUBSILL
(PONDEROSA PINE)

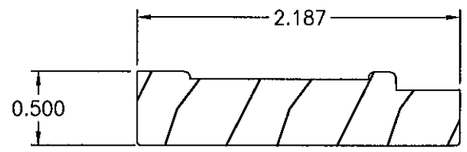

4 LINEAL DOOR STOP
(PONDEROSA PINE)

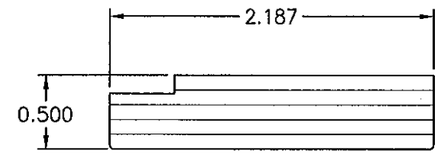

5 RADIAL DOOR STOP
(LAMINATED VENEER)

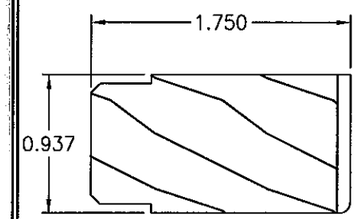

8 WOOD DOOR EXTENDER
(PONDEROSA PINE)

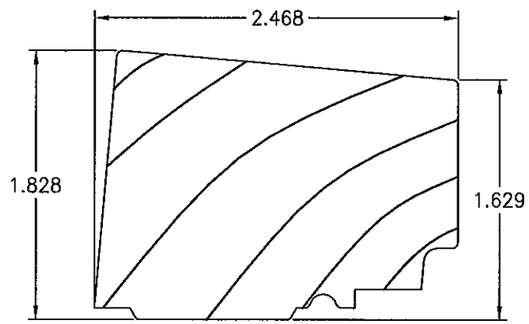

9 DOOR THRESHOLD CAP BUMPER
(PONDEROSA PINE)

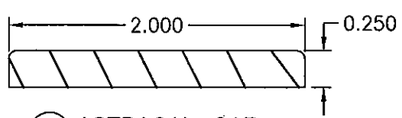

10 ASTRAGAL CAP
(PONDEROSA PINE)

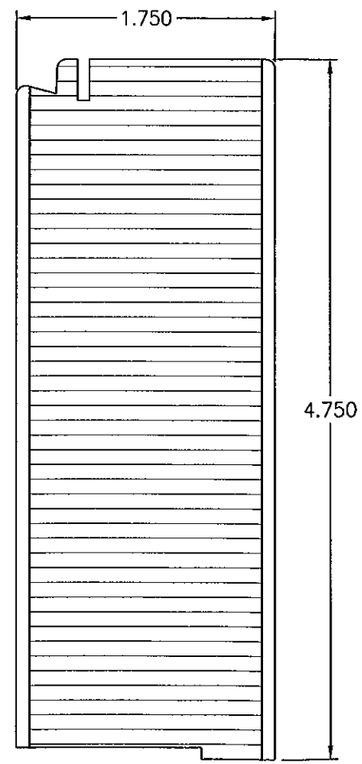

11 RADIAL DOOR RAIL
(LAMINATED VENEER)

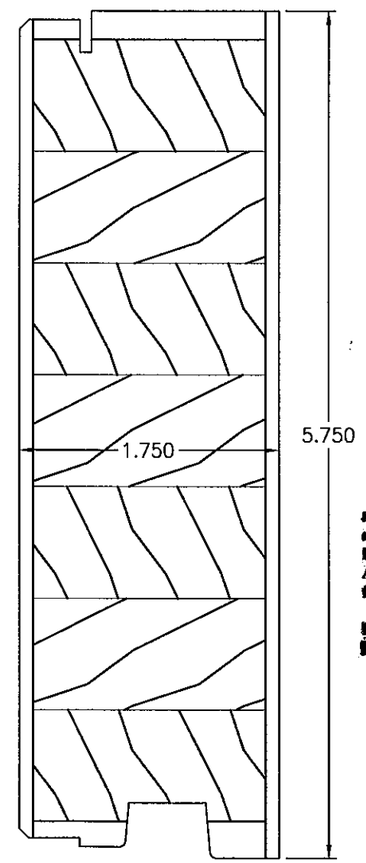

12 LINEAL TOP DOOR RAIL
(PONDEROSA PINE)

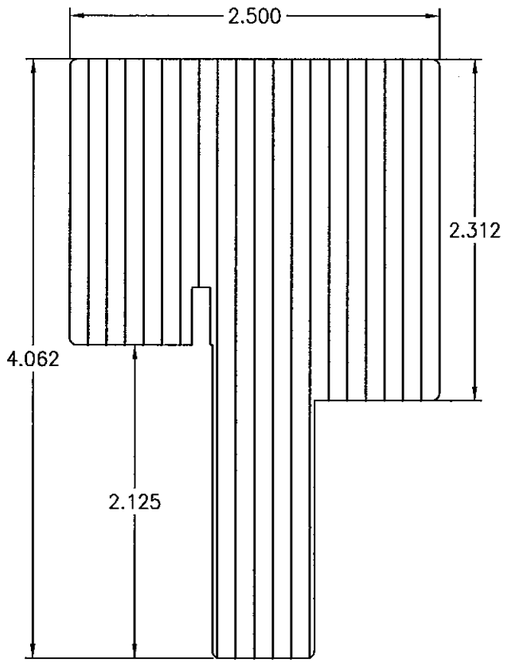

13 ASTRAGAL
(LAMINATED VENEER)

PRODUCT REVISED
as complying with the Florida
Building Code
Acceptance No 11-1014.07
Expiration Date 4/26/14
By Chas. L. Hayek
Miami-Dade Product Control

WARREN W. SCHAEFER ★ ENGINEER ★ LICENSE No. 44135 ★ STATE OF FLORIDA ★ PROFESSIONAL ENGINEER

DRAWN BY: K.P.S.	CHECKED BY: W.W.S.
PLOT: 1=1	DATE: 05/13/03

NO.	REVISION DESCRIPTION	BY	DATE

DRAWING TITLE
ALUMINUM CLAD WOOD FRENCH IMPACT DOORS

MANUFACTURER
KML WINDOWS, INC.
71 SECOND STREET
STRATHROY, ONTARIO, CANADA N7G 3H8
(519) 245-2270

CONSULTANTS
W. W. SCHAEFER ENGINEERING & CONSULTING, P.A. (CA 6809)
7480 150TH COURT NORTH
PALM BEACH GARDENS, FL 33418
PHONE: 561-744-3424

CERTIFICATION
OCT 12 2011
WARREN W. SCHAEFER, P.E.
P.E. NO. 44135

DRAWING NO. 1228A
REV. B
SHEET NO. 10 OF 12

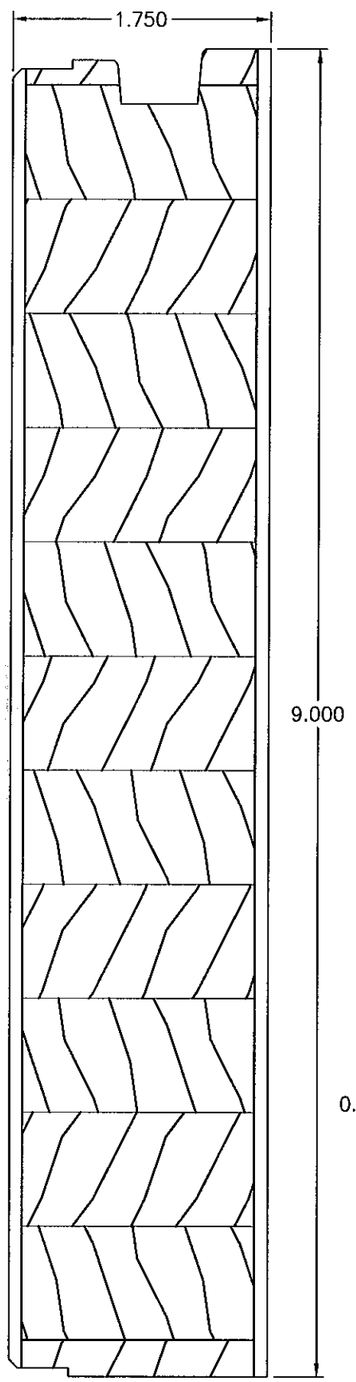

(14) DOOR BOTTOM RAIL
(PONDEROSA PINE)

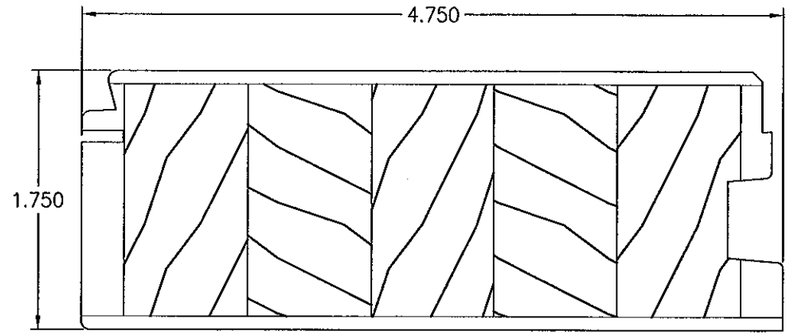

(15) WOOD STILE
(PONDEROSA PINE)

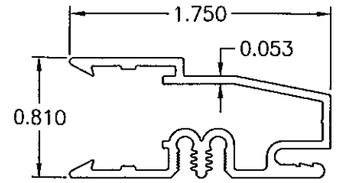

(16A) JAMB CLADDING
(6063–T5 ALUMINUM)

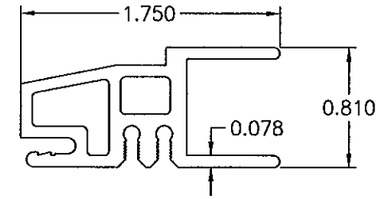

(16B) OPTIONAL JAMB CLADDING
(6063–T5 ALUMINUM)

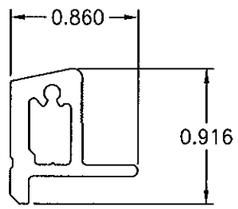

(17) RADIAL GLASS STOP
(6063–T5 ALUMINUM)

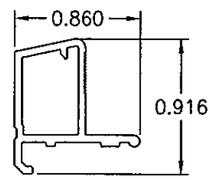

(18) LINEAL GLASS STOP
(6063–T5 ALUMINUM)

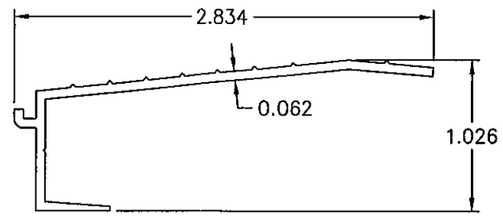

(19) DOOR SILL
(6063–T5 ALUMINUM)

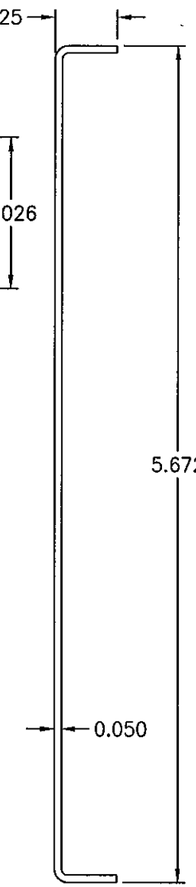

(24) DOOR TOP RAIL CLAD
(3003–H14 ALUMINUM)

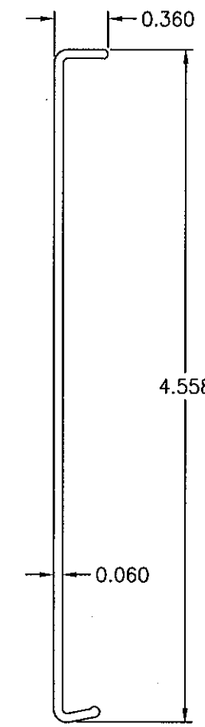

(25) DOOR STILE CLAD
(6063–T5 ALUMINUM)

PRODUCT REVISED
as complying with the Florida
Building Code
Acceptance No. 11-1014.07
Expiration Date 4/26/14
By
Miami-Dade Product Control

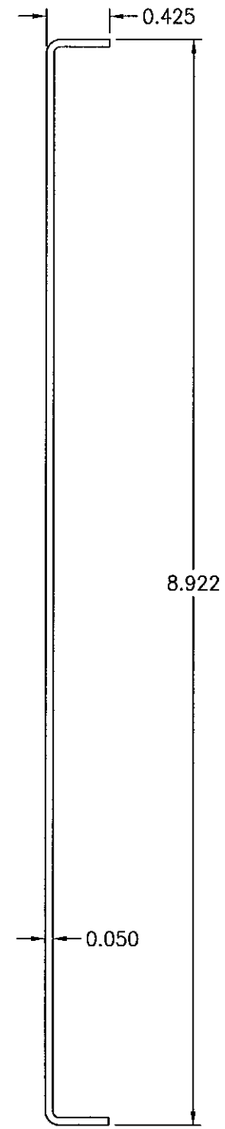

(26) DOOR BOTTOM RAIL CLAD
(3003–H14 ALUMINUM)

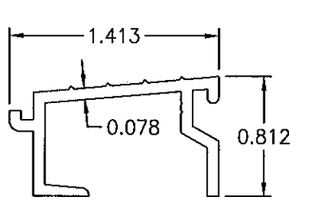

(20) THRESHOLD EXTENDER
(6063–T5 ALUMINUM)

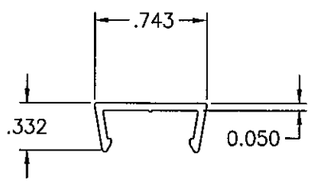

(21) MULLION CLIP @ PLATTED MULLION
(6063–T5 ALUMINUM)

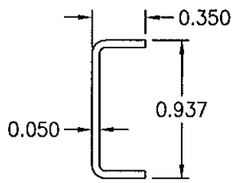

(23) RAIL CLADDING EXTENDER
(3003–H14 ALUMINUM)

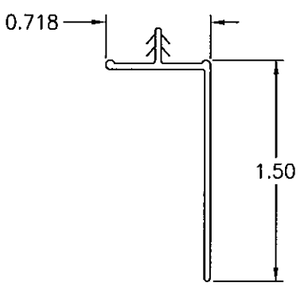

(27) NAILING FIN
(VINYL)

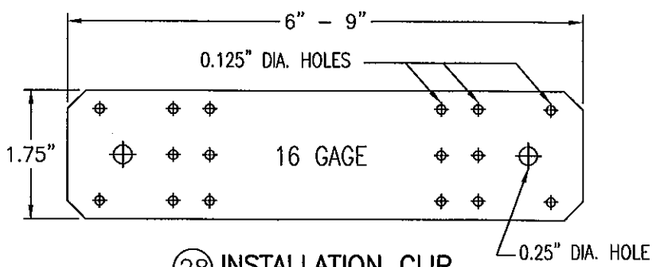

(28) INSTALLATION CLIP
(GALVANIZED STEEL)
Fy = 33 ksi MIN.

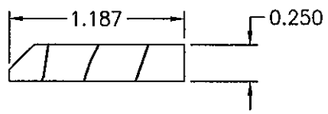

(22) INT. THRESHOLD TRIM
(PONDEROSA PINE)

WARREN W. SCHAEFER
LICENSE No. 44135
STATE OF FLORIDA
PROFESSIONAL ENGINEER

NO.	REVISION DESCRIPTION	BY	DATE

DRAWN BY: K.P.S.
CHECKED BY: W.W.S.
PLOT: 1=1
DATE: 05/13/03

DRAWING TITLE
ALUMINUM CLAD WOOD FRENCH IMPACT DOORS

MANUFACTURER
KML WINDOWS, INC.
71 SECOND STREET
STRATHROY, ONTARIO, CANADA N7G 3H8
(519) 245–2270

CONSULTANTS
W. W. SCHAEFER ENGINEERING & CONSULTING, P.A. (CA 6809)
7480 150TH COURT NORTH
PALM BEACH GARDENS, FL 33418
PHONE: 561–744–3424

CERTIFICATION
OCT 12 2011
WARREN W. SCHAEFER, P.E.
P.E. NO. 44135

DRAWING NO. 1228A
REV. B
SHEET NO. 11 OF 12

MATERIAL LIST

PART NO.	REF. NO.	DESCRIPTION	NOTES
		PARTS & EXTRUSIONS	
1	PF1010	LINEAL JAMB WOOD MEMBER	SEE NOTE 1
2	PF1231	CURVED JAMB WOOD MEMBER	LAMINATED VENEER
3	PF1358	WOOD SUBSILL FOR THRESHOLD	SEE NOTE 1
4	PF1351	LINEAL WOOD DOOR STOP	SEE NOTE 1
5	PF1351	RADIAL WOOD DOOR STOP	LAMINATED VENEER
6	PF1008	WOOD LINEAL GLAZING STOP	SEE NOTE 1
7	PF1008	WOOD RADIAL GLAZING STOP	LAMINATED VENEER
8	PF1169	WOOD BOTTOM RAIL EXTENDER	SEE NOTE 1
9	PF1362	DOOR THRESHOLD CAP/BUMPER	SEE NOTE 1
10	PF1507	ASTRAGAL CAP	SEE NOTE 1
11	PF1130	RADIAL DOOR TOP RAIL	LAMINATED VENEER
12	PF1131	LINEAL DOOR TOP RAIL	SEE NOTE 1
13	PF1489	WOOD ASTRAGAL	LAMINATED VENEER
14	PF1132	WOOD BOTTOM RAIL	SEE NOTE 1
15	PF1130	WOOD STILE	SEE NOTE 1
16A/B	PF1001/1002	JAMB CLADS	6063–T5 ALUMINUM
17	PF1017	RADIAL GLASS STOP	6063–T5 ALUMINUM
18	PF1458	ALUMINUM LINEAL GLASS STOP	6063–T5 ALUMINUM
19	PF1086	4 9/16" OUTSWING DOOR SILL	6063–T5 ALUMINUM
20	PF1083	THRESHOLD EXTENDER	6063–T5 ALUMINUM
22	PF1295	INTERIOR THRESHOLD TRIM	SEE NOTE 1
23	PF1172	BOTTOM RAIL EXTENDER CLADDING	3003–H14 ALUMINUM
24	PF1135	TOP RAIL CLAD	3003–H14 ALUMINUM
25	PF1134	STILE CLAD	6063–T5 ALUMINUM
26	PF1136	BOTTOM RAIL CLAD	3003–H14 ALUMINUM
27	PF1214 PF1326	VINYL NAIL FIN	OPTIONAL WITH SHEAR SCREW INSTALLATION
28	SK1031	GALVANIZED 16 GA. STEEL INSTALLATION CLIP	GALVANIZED STEEL, INC. (Fy = 33 ksi MIN.) WITHIN 4" OF CORNERS & 12" MAX. O.C.
30	SK1156	FIVE KNUCKLE FULL MORTISE HINGE	STANLEY NO. FBB191; STAINLESS STEEL (4 PER DOOR PANEL)
31A	–	G–U US TRIM SERIES 2000 HANDLE	USE WITH PART #32 LOCKING HARDWARE (BRASS)
31B	SK1415	W&F MFG. SERIES 1200 LOCKSET	INCLUDES HANDLE & SINGLE DEAD BOLT (BRASS)
32	–	G–U 3–POINT DOOR LOCKSET	US TRIPACT DOOR BOLT SYS. (USE WITH #31A)
33	SK1193	KML INTERIOR FLUSH BOLT	1 TOP & BOTTOM EACH DOOR PANEL INTERIOR
34	SK1597	0.945"X2.25"X0.078" STL STRIKE PLATE (Fy = 33 ksi MIN.)	1 AT EACH FLUSH BOLT STRIKE (HEAD & SILL) NICKEL PLATED STEEL
35	SK1598	4"X12" X1/8" STEEL STRIKE PLATE (MIN. ASTM A446 GRADE A STEEL)	LOCATED AT CENTER/TOP OF HEAD JAMB NICKEL PLATED OR PAINTED STEEL
		FASTENERS	
36	–	#8 X 1 1/4" SMS SCREW OR 1 5/8" DRYWALL SCREW	WITHIN 4" FROM ENDS & MAX. 10 1/2" O.C. WITH FIN
37	–	#8 X 1 1/4" SMS SCREW	2 PER CLIP INTO BUCK (1 EA. SIDE OF BUCK)
38	–	#8 X 5/8" PAN HEAD SMS SCREW	3 PER CLIP INTO JAMB
39	–	3/8" LONG STAPLE	WITHIN 3" FROM CORNERS & MAX. 8" O.C.

MATERIAL LIST

PART NO.	REF. NO.	DESCRIPTION	NOTES
40	–	#6 X 1 5/8" SMS SCREW	WITHIN 3" FROM CORNERS & MAX. 6" O.C.
41	–	#6 X 3/4" SMS SCREW	WITHIN 3" FROM CORNERS & MAX. 12" O.C.
42	–	#8 X 2" SMS SCREW	3 @ EA. RECTANGULAR JAMB CORNER
43	–	#8 X 1 1/2" SMS SCREW	3 @ EA. RADIUS JAMB CORNER
44	–	#6 X 3/4" SMS SCREW	2 @ EA. JAMB CLAD CORNER INTO CLAD SPLINES
45	–	3/8" X 5" LAG BOLT	1 @ TOP STILE & RAIL, 2 BOTTOM STILE & RAIL
46	–	#12 X 3/4" SMS SCREW	4 @ EA. HINGE INTO JAMB (EXCLUDING TOP HINGE)
47	–	#12 X 1 1/4" S.S. SCREW	4 @ EA. HINGE INTO STILE
48A	–	#12X2 1/2" S.S. OR BRASS SMS	2 @ TOP HINGE ONLY THRU JAMB INTO BUCK
48C	–	1/4"–20 X 3/4" MACHINE SCREW	2 @ TOP HINGE ONLY (WITH T–NUT)
49	–	#10 SMS SCREWS (1 3/8" MIN. BUCK EMBED)	WITHIN 4" FROM CORNERS & MAX. 12" O.C.
50	–	#8 X 1 3/4" SMS SCREW	2" FROM ASTRAGAL ENDS & MAX. 12" O.C.
51A	–	#10 SMS SCREWS (MIN. 1 3/8" BUCK EMBED)	2 THRU EA. STRIKE PLATE, JAMB & INTO BUCK
51B	–	1/4" TAPCON (WHEN INTO CONCR.) (MIN. 1 1/4" CONCR. EMBED)	2 THRU EA. STRIKE PLATE, JAMB & INTO CONCR.
52A	–	#6 X 3/4" SMS SCREW	6 THRU TOP STRIKE PLATE & INTO HEAD JAMB
52B	–	#8 X 1 1/4" SMS SCREW	6 THRU TOP STRIKE PLATE & INTO HEAD JAMB
53A	–	1/4" TAPCON (WHEN INTO CONCR.) (MIN. 1 1/4" CONCR. EMBED)	2 THRU EA. SILL STRIKE PLATE & INTO CONCRETE
53B	–	#10 SMS SCREW (MIN. 1 3/8" FRAMING EMBED)	2 THRU EA. SILL STRIKE PLATE & INTO FRAMING
54A	–	1/4" TAPCON (WHEN INTO CONCR.) (MIN. 1 1/4" CONCR. EMBED)	WITHIN 4" OF CORNERS & MAX. 12" O.C.
54B	–	#10 S/STL SCREWS (MIN. 1 3/8" FRAMING EMBED)	WITHIN 4" OF CORNERS & MAX. 12" O.C.
55		#10 X 1.5" SMS SCREW (SIDE JAMB TO MULL PLATE)	4" FROM CORNERS & MAX. 12" O.C.
56	–	#10 X 2 1/2" SMS SCREW	4" FROM CORNERS & MAX 12" O.C.
57	–	#8 X 1 3/4" SMS	3" FROM CORNERS & MAX 12" O.C.
57A	–	#8 X 1" SMS SCREW	3" FROM CORNERS & MAX. 8" O.C.
57B	–	#8 X 2 1/2" SMS SCREW	3" FROM CORNERS & MAX 12" O.C.
		SEALANTS	
58	–	DOW 995 SILICONE	FOR 1/2" GLAZING BITE
59	–	DOW 1199 STRUCTURAL SILICONE ADHESIVE	CONT. CLADDING TO JAMB & DOOR STOP TO JAMB
		OTHER	
60	–	NORTON NORGLAZE .0625" X .437" GLAZING TAPE	POLYOLEFIN FOAM W/ ACRYLIC ADHESIVE
61	–	TREMCO 440 BUTYL TAPE GASKET	TRIM OFF AT EDGES (TYP. AT JAMB CLAD CORNERS)
65	PF1371	FRAME WEATHERSEAL	SCHLEGEL
66	PF1026	0.415" X 0.489" RAINSKIRT	SCHLEGEL EXTRUDED FLEXIBLE COPOLYMER

1. WOOD USED IN TESTING WAS PONDEROSA PINE. OTHER WOOD SPECIES APPLICABLE FOR USE WITH THIS PRODUCT ARE THOSE WITH A SPECIFIC GRAVITY OF 0.43 AND MODULUS OF ELASTICITY OF 1,200,000 PSI OR GREATER. ALL WOOD IS MINIMUM GRADE 2 MILLED BY KML WINDOWS, INC. TO SELECT.

PRODUCT REVISED
In complying with the Florida Building Code
Acceptance No. 11-1014.07
Expiration Date 4/26/14
By Ishaq I. Llagunja
Miami-Dade Product Control

WARREN W. SCHAEFER LICENSE No. 44135 STATE OF FLORIDA PROFESSIONAL ENGINEER

DRAWN BY: K.P.S.	CHECKED BY: W.W.S.
PLOT: 1=1	DATE: 05/13/03

NO.	REVISION DESCRIPTION	BY	DATE

DRAWING TITLE
ALUMINUM CLAD WOOD FRENCH IMPACT DOORS

MANUFACTURER
KML WINDOWS, INC.
71 SECOND STREET
STRATHROY, ONTARIO, CANADA N7G 3H8
(519) 245–2270

CONSULTANTS
W. W. SCHAEFER ENGINEERING & CONSULTING, P.A. (CA 6809)
7480 150TH COURT NORTH
PALM BEACH GARDENS, FL 33418
PHONE: 561–744–3424

CERTIFICATION
OCT 12 2011
WARREN W. SCHAEFER, P.E.
P.E. NO. 44135

DRAWING NO. 1228A
REV. B
SHEET NO. 12 OF 12