MIAMI-DADE COUNTY
PRODUCT CONTROL SECTION
11805 SW 26 Street, Room 208
Miami, Florida 33175-2474
T (786) 315-2590 F (786) 315-2599
www.miamidade.gov/economy

DEPARTMENT OF REGULATORY AND ECONOMIC RESOURCES (RER)
BOARD AND CODE ADMINISTRATION DIVISION

NOTICE OF ACCEPTANCE (NOA)

Stone Panels, Inc.
100 South Royal Lane
Coppell, TX 75019

SCOPE: This NOA is being issued under the applicable rules and regulations governing the use of construction materials. The documentation submitted has been reviewed and accepted by Miami-Dade County RER-Product Control Section to be used in Miami Dade County and other areas where allowed by the Authority Having Jurisdiction (AHJ).

This NOA shall not be valid after the expiration date stated below. The Miami-Dade County Product Control Section (In Miami Dade County) and/or the AHJ (in areas other than Miami Dade County) reserve the right to have this product or material tested for quality assurance purposes. If this product or material fails to perform in the accepted manner, the manufacturer will incur the expense of such testing and the AHJ may immediately revoke, modify, or suspend the use of such product or material within their jurisdiction. RER reserves the right to revoke this acceptance, if it is determined by Miami-Dade County Product Control Section that this product or material fails to meet the requirements of the applicable building code.

This product is approved as described herein, and has been designed to comply with the Florida Building Code, including the High Velocity Hurricane Zone.

DESCRIPTION: StoneLite® Stone-Aluminum Wall Panels

APPROVAL DOCUMENT: Drawing titled "StoneLite® Stone Panels Used For Curtain Wall", Sheets 1 through 8 of 8, dated 06/06/2012, prepared by the manufacturer, signed and sealed by Terence J. Cavanagh, P.E., bearing the Miami-Dade County Product Control revision stamp with the Notice of Acceptance number and expiration date by the Miami-Dade County Product Control Section.

MISSILE IMPACT RATING: Large and Small Missile Impact Resistant

LABELING: A permanent label with the manufacturer's name or logo, manufacturing plant's city and state, model/series, and the statement reading 'Miami-Dade County Product Control Approved' is to be located on each panel.

RENEWAL of this NOA shall be considered after a renewal application has been filed and there has been no change in the applicable building code negatively affecting the performance of this product.

TERMINATION of this NOA will occur after the expiration date or if there has been a revision or change in the materials, use, and/or manufacture of the product or process. Misuse of this NOA as an endorsement of any product, for sales, advertising or any other purposes shall automatically terminate this NOA. Failure to comply with any section of this NOA shall be cause for termination and removal of NOA.

ADVERTISEMENT: The NOA number preceded by the words Miami-Dade County, Florida, and followed by the expiration date may be displayed in advertising literature. If any portion of the NOA is displayed, then it shall be done in its entirety.

INSPECTION: A copy of this entire NOA shall be provided to the user by the manufacturer or its distributors and shall be available for inspection at the job site at the request of the Building Official.

This NOA **renews and revises NOA # 08-0625.03** and consists of this page 1, evidence page E-1, as well as approval document mentioned above.

The submitted documentation was reviewed by **Carlos M. Utrera, P.E.**

MIAMI-DADE COUNTY APPROVED

09/25/2012

NOA No 11-1017.02
Expiration Date: January 9, 2017
Approval Date: September 27, 2012

NOTICE OF ACCEPTANCE: EVIDENCE SUBMITTED

A. DRAWINGS

1. Drawing titled "StoneLite® Stone Panels Used For Curtain Wall", Sheets 1 through 8 of 8, dated 06/06/2012, prepared by the manufacturer, signed and sealed by Terence J. Cavanagh, P.E.

B. TESTS

1. Test reports on 1) Air Infiltration Test, per FBC, TAS 202-94
   2) Uniform Static Air Pressure Test, Loading per FBC TAS 202-94
   3) Water Resistance Test, per FBC, TAS 202-94
   4) Large Missile Impact Test per FBC, TAS 201-94
   5) Cyclic Wind Pressure Loading per FBC, TAS 203-94

   along with marked-up drawings and installation diagram of Stonelite Stone Panels, prepared by Hurricane Test Laboratory, LLC, Test Report No. **T053-0401-08**, dated 04/22/2008, signed and sealed by Vinu J. Abraham, P.E.
2. Test report on Surface Burning Characteristics of Building Materials per ASTM E84 of limestone bonded to aluminum honeycomb with epoxy resin, prepared by Southwest Research Institute, Test Report No. **SWRI 01.14430-01-041**, dated 12/02/2008, signed by Gladys M. Miller.

   "Submitted under NOA # 02-1104.11"

	Test Report	Test Name	Date	Signature
3.	SWRI 01-7520-248	ASTM E84	05/21/96	W. Orrison, P.E.
4.	SWRI 01-7520-249	ASTM D1929	06/05/96	W. Orrison, P.E.
5.	SWRI 01-7520-250	ASTM D635	05/20/96	W. Orrison, P.E.

C. CALCULATIONS

1. Fasteners calculations prepared by TJC and Associates, Inc, dated 06/24/2012, signed and sealed by Terence J. Cavanagh, P.E.

D. MATERIAL CERTIFICATIONS

1. None

E. QUALITY ASSURANCE

1. Miami-Dade Department of Regulatory and Economic Resources (RER)

F. STATEMENTS

1. Statement letter of code conformance to 2010 FBC, issued by TJC and Associates, Inc., dated 03/07/2012, signed and sealed by Terence J. Cavanagh, P.E.

   "Submitted under NOA # 07-1018.03"
2. Letter stating that product has not been affected by the FBC changes, issued by TDI Associates, Inc., dated 10/12/2007, signed and sealed by Robert E. Williams, Jr., P.E.

09/25/2012

Carlos M. Utrera, P.E.
Product Control Examiner
NOA No 11-1017.02
Expiration Date: January 9, 2017
Approval Date: September 27, 2012

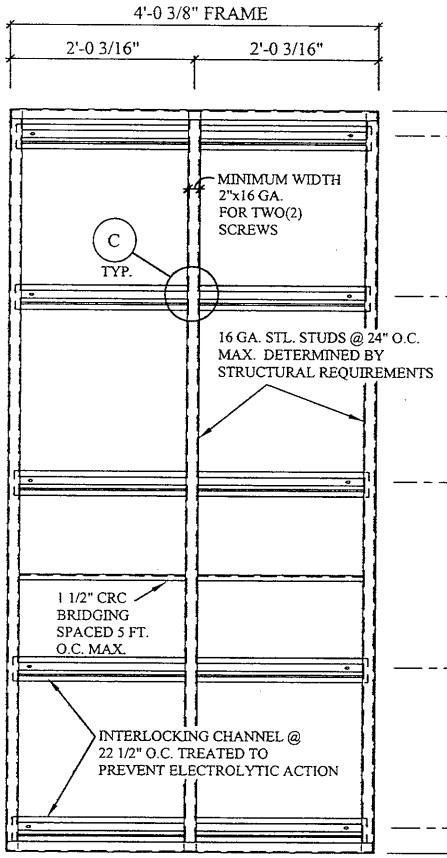

REAR ELEVATION

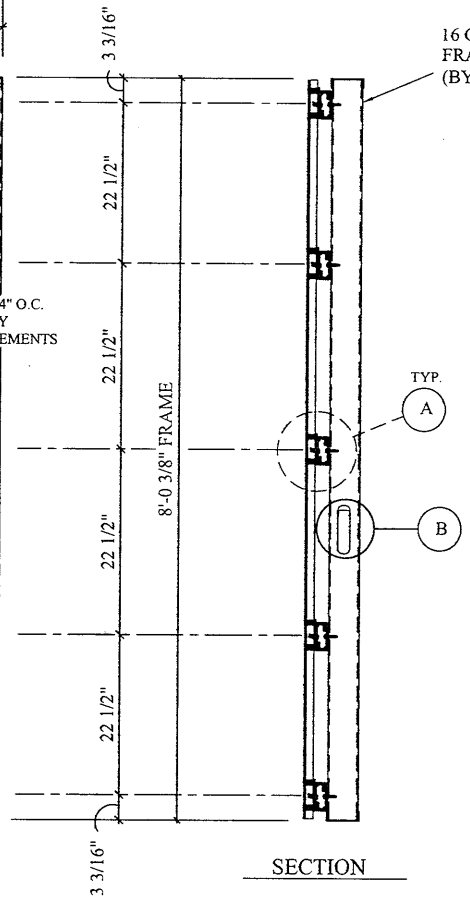

SECTION

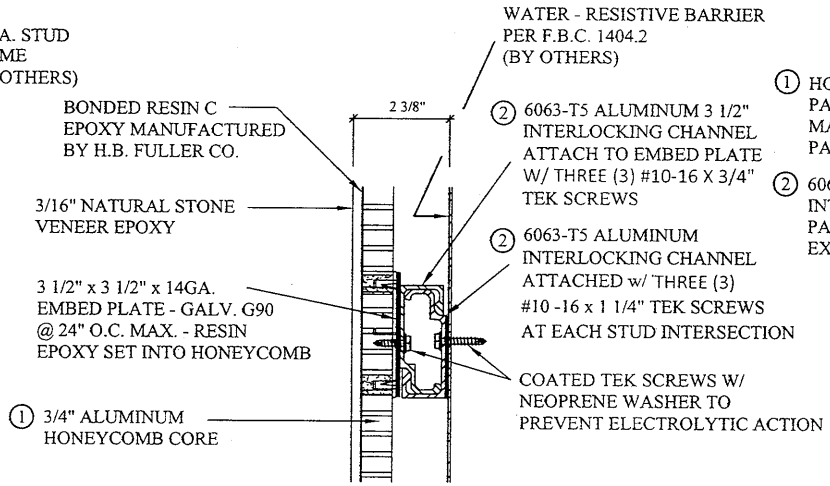

A INTERLOCKING CHANNEL DETAIL

COMPONENTS

1. HONEYCOMB BACKING PANEL PER ICC APPROVED MANUFACTURE - SEE STONE PANELS, INC. Q.C. MANUAL.
2. 6063-T5 ALUMINUM-INTERLOCKING CHANNEL PART NO. 4498 BY EXTRUDERS

PRODUCT REVISED
as complying with the Florida Building Code
Acceptance No 11-1017.02
Expiration Date 01/09/201
By
Miami/Dade Product Control

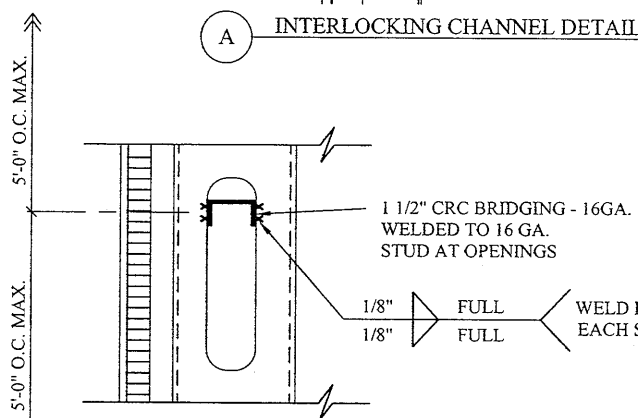

B CRC BRIDGING DETAIL

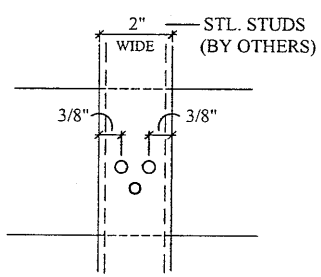

C SPACING OF TEK-SCREWS

Notes:

1. DESIGN PRESSURE RATING ±68 PSF.
2. LARGE MISSILE IMPACT RESISTANCE.
3. #10-16 TEK SCREWS SHALL BE HILTI SELF-DRILLING SCREWS (ESR 2196), ITW BUILDEX TEKS (ESR 1976) OR EQUAL.
4. STONE PANEL SHALL BE SP-1-10-3.
5. COMPONENTS OF THE STONE PANEL SP-1-10-3 SHALL BE AS DEFINED IN THE QUALITY CONTROL DOCUMENTS ASSOCIATED WITH ICC-ES ESR 1500.

TITLE: STONELITE® STONE PANELS USED FOR CURTAIN WALL

Stone panels® Inc.

Global Supplier of StoneLite® Marble, Granite & Limestone Panels

100 S. Royal Lane · Coppell, TX 75019 · 469.635.5000 · www.stonepanels.com

6-6-2012

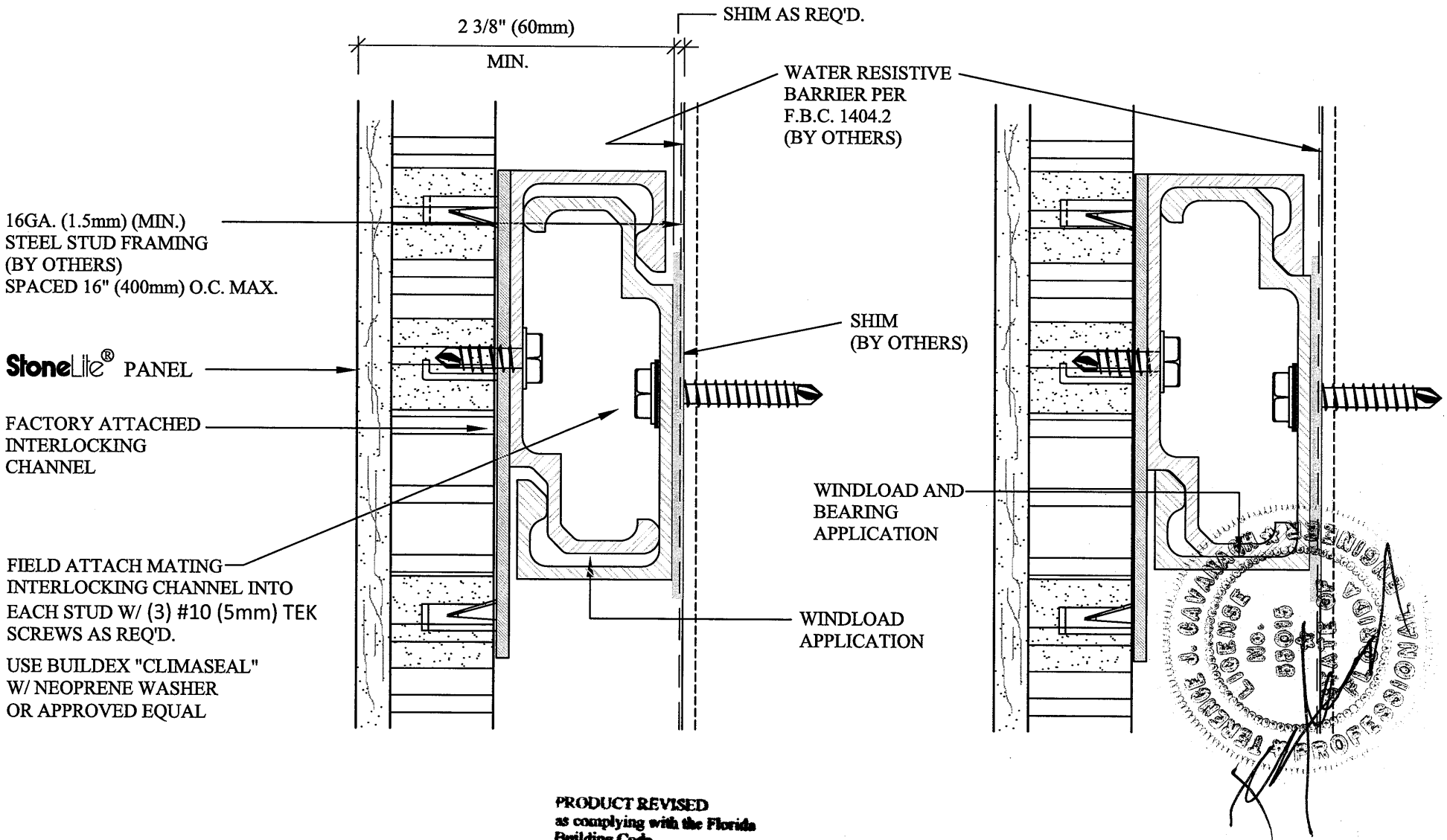

PRODUCT REVISED
as complying with the Florida Building Code
Acceptance No 11-1017.02
Expiration Date 01/09/2017
By _____
Miami Dade Product Control

SP-1	TYPICAL **WIDE** INTERLOCKING CHANNEL

Stonepanels® Inc.
100 S. Royal Lane
Coppell, TX 75019
469.635.5000
www.stonepanels.com
Global Supplier of StoneLite® Marble, Granite & Limestone Panels

6-6-2012

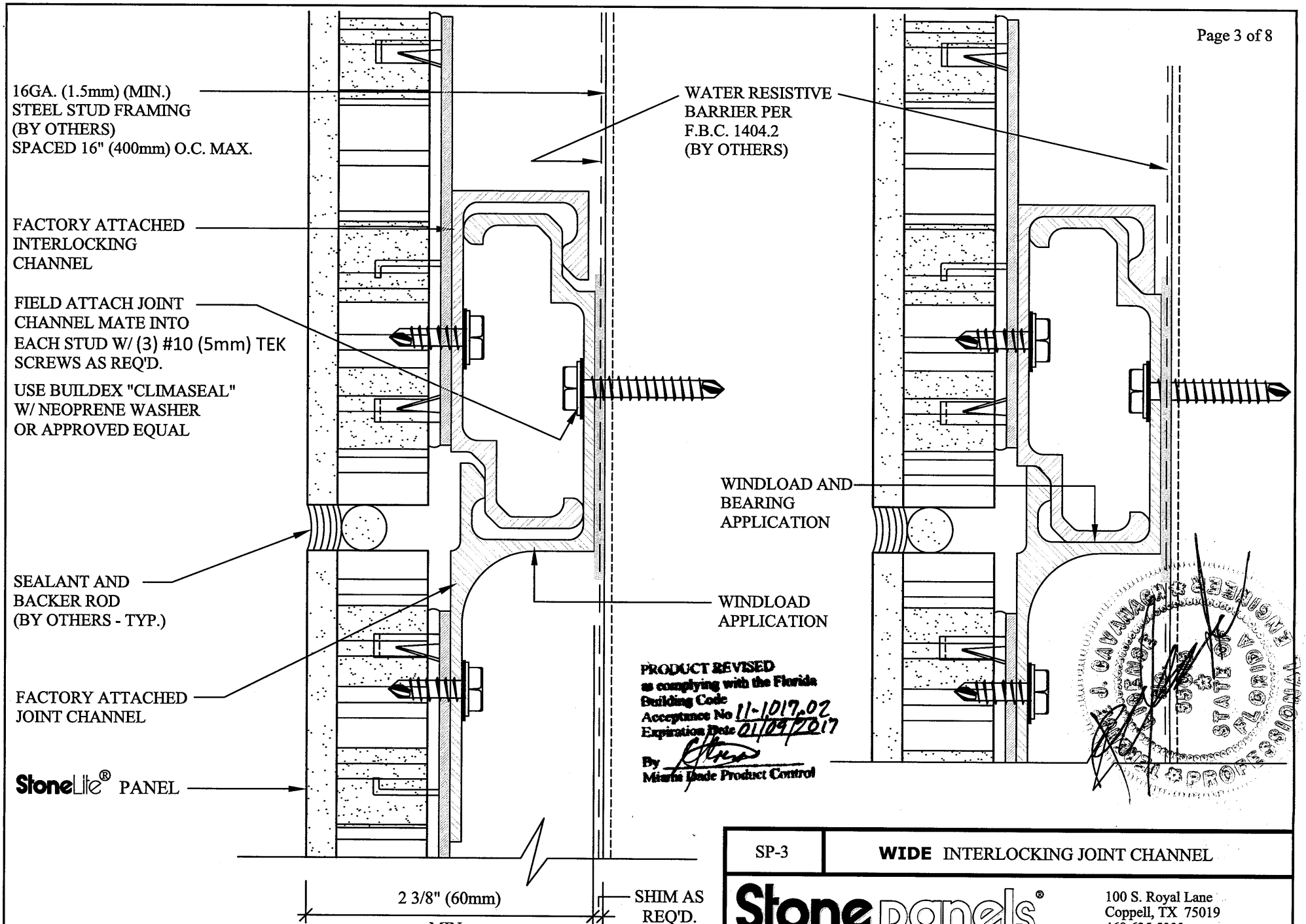

SP-3	**WIDE** INTERLOCKING JOINT CHANNEL

Stone panels® Inc.

100 S. Royal Lane
Coppell, TX 75019
469.635.5000
www.stonepanels.com

Global Supplier of StoneLite® Marble, Granite & Limestone Panels

6-6-2012

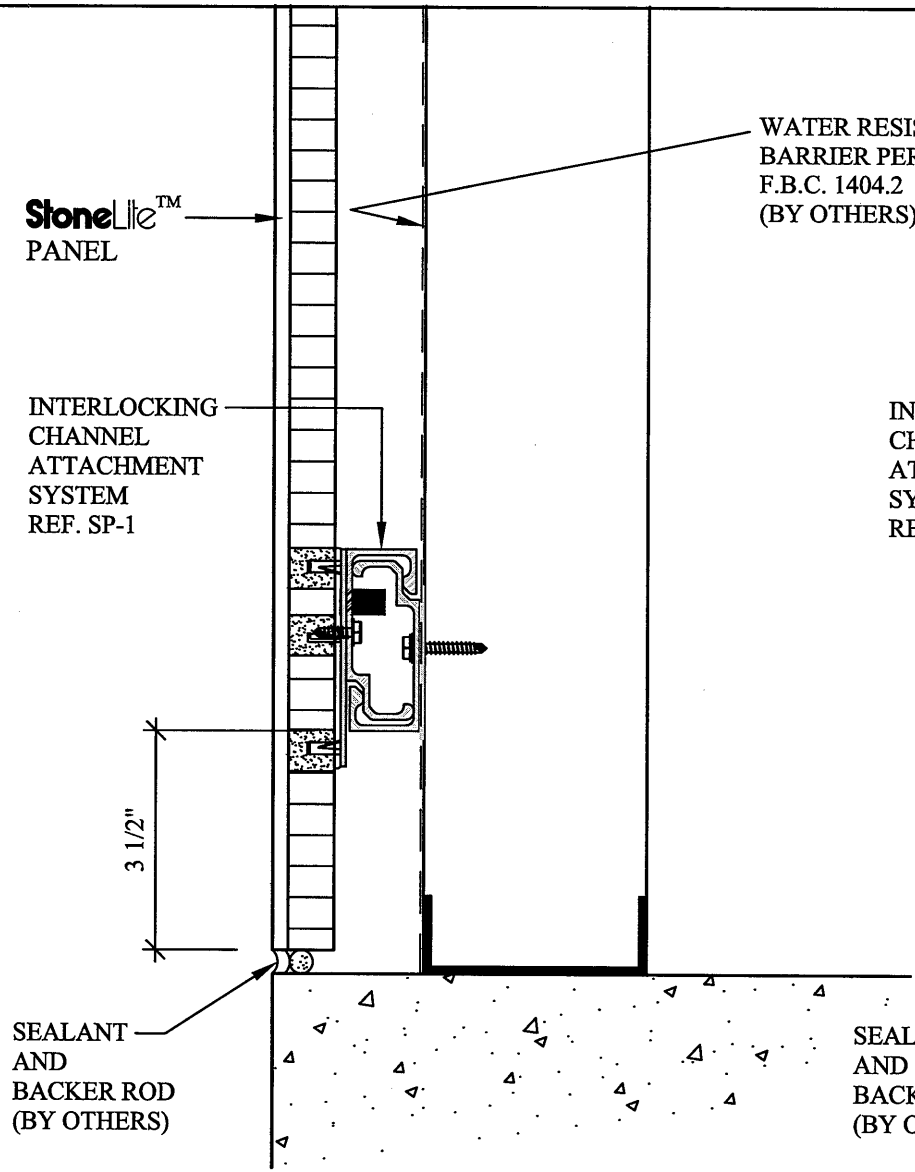

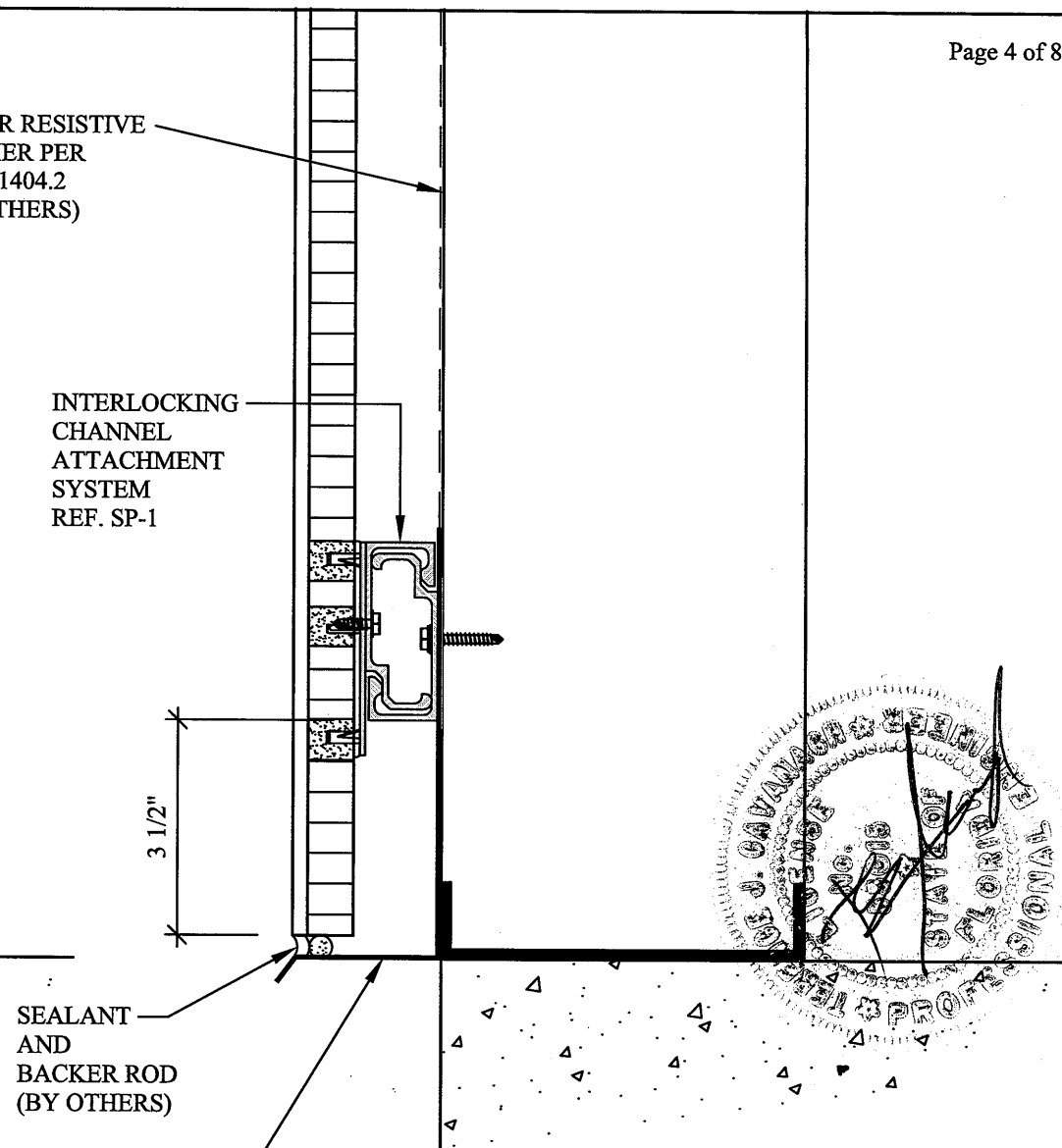

PRODUCT REVISED
as complying with the Florida
Building Code
Acceptance No 11-1017.02
Expiration Date 01/09/2017
By
Miami Dade Product Control

SP-7	INTERLOCKING CHANNEL SYSTEM AT BASE

Stone panels® Inc.

100 S. Royal Lane
Coppell, TX 75019
469.635.5000
www.stonepanels.com

Global Supplier of StoneLite® Marble, Granite & Limestone Panels

6-6-2012

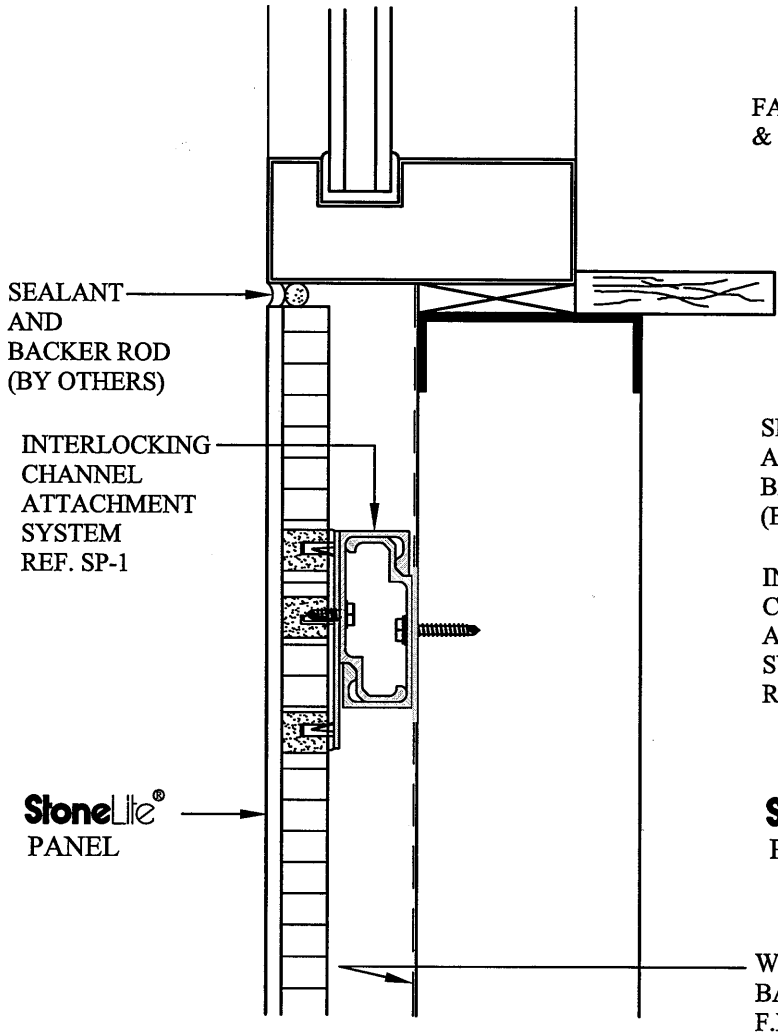

FLUSH WINDOW SILL

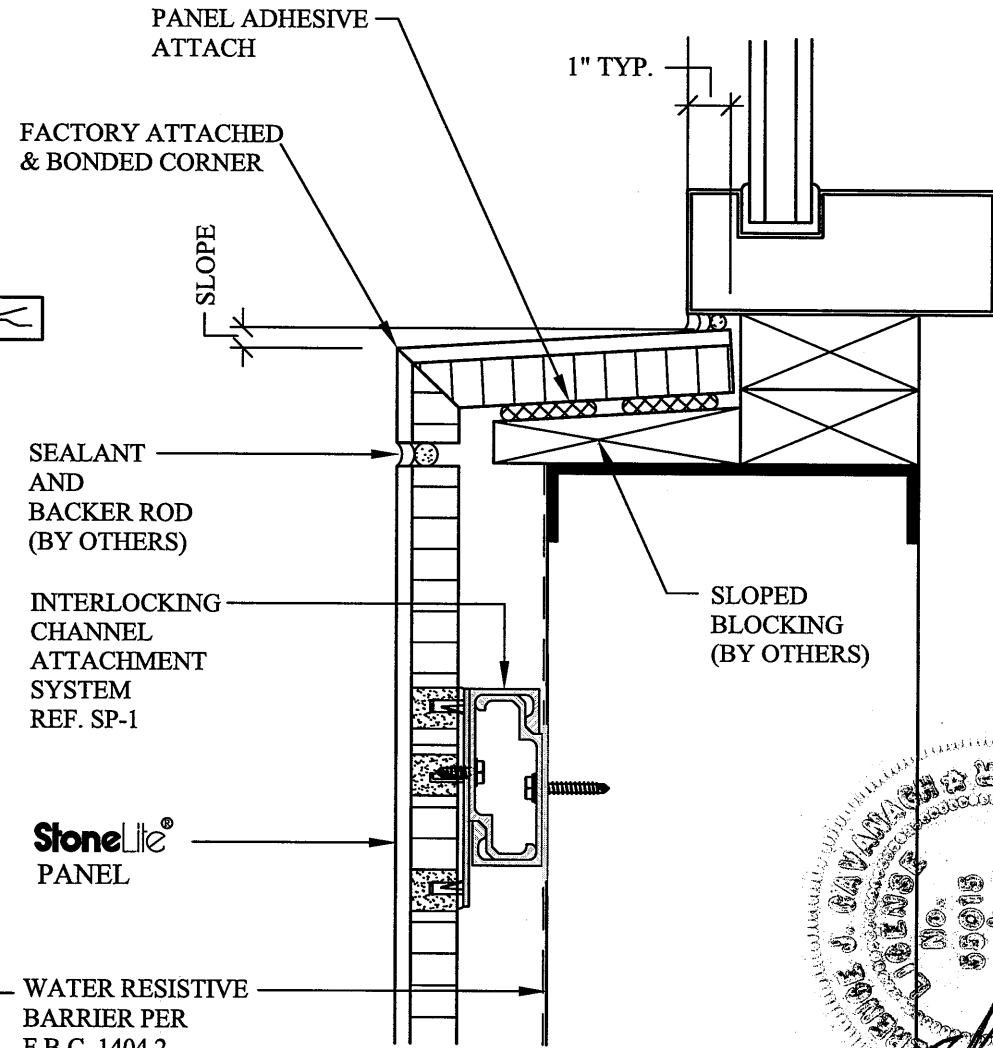

RECESSED WINDOW SILL

PRODUCT REVISED
as complying with the Florida Building Code
Acceptance No 11-1017.02
Expiration Date 01/09/2017
By _____
Miami Dade Product Control

SP-8	TYPICAL WINDOW SILL DETAILS

Stone panels® Inc.
100 S. Royal Lane
Coppell, TX 75019
469.635.5000
www.stonepanels.com
Global Supplier of StoneLite® Marble, Granite & Limestone Panels

6-6-2012

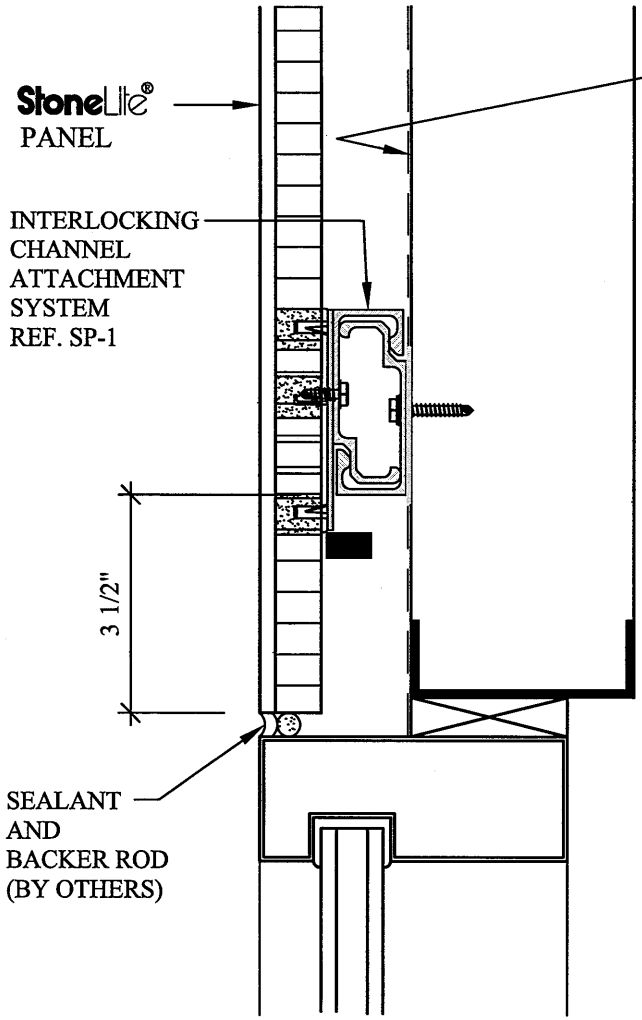

FLUSH WINDOW HEAD

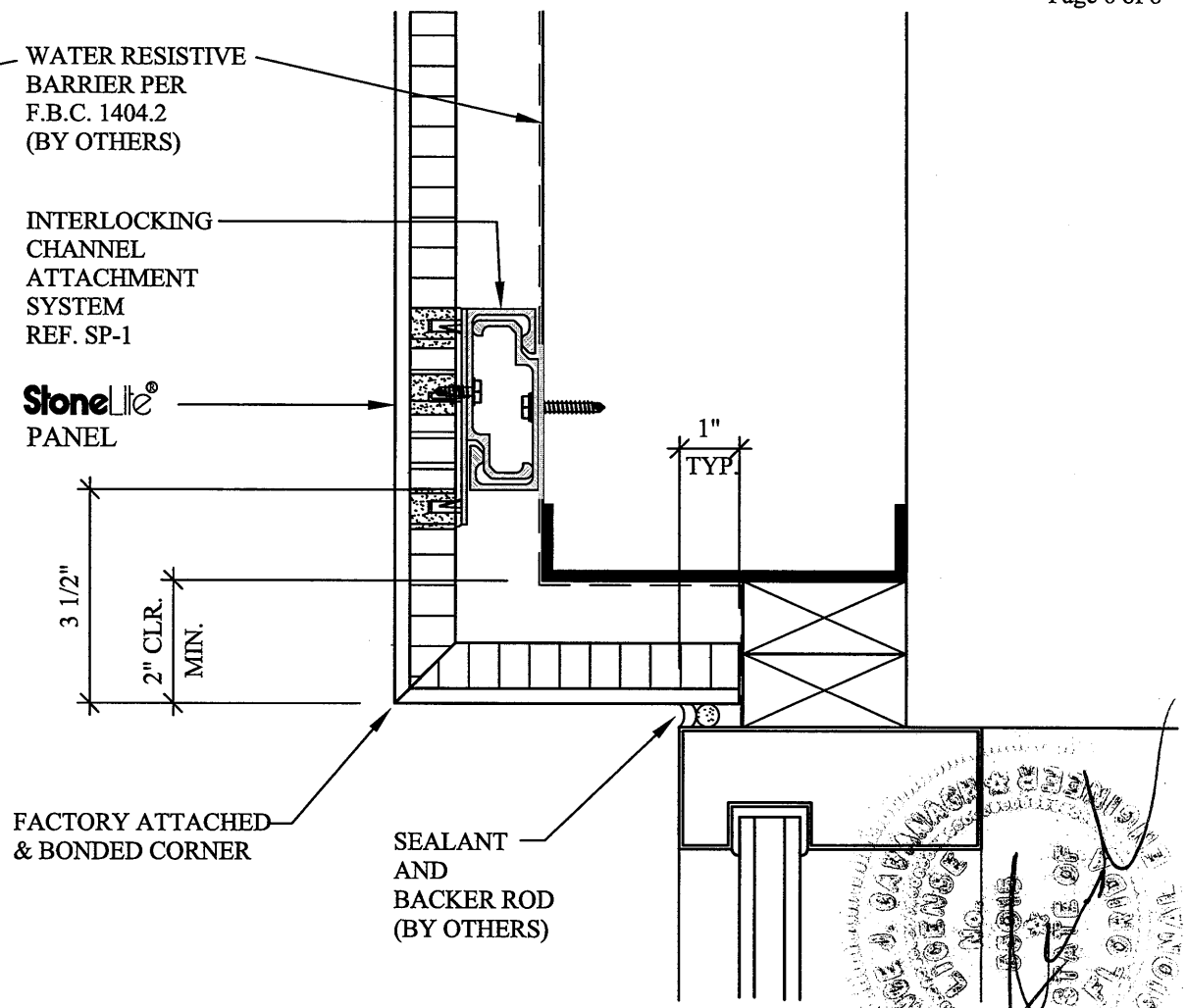

RECESSED WINDOW HEAD

PRODUCT REVISED
as complying with the Florida Building Code
Acceptance No 11-1017.02
Expiration Date 01/09/2017
By
Miami Dade Product Control

SP-9	TYPICAL WINDOW HEAD DETAILS

Stone panels® Inc.
100 S. Royal Lane
Coppell, TX 75019
469.635.5000
www.stonepanels.com
Global Supplier of StoneLite® Marble, Granite & Limestone Panels

6-6-2012

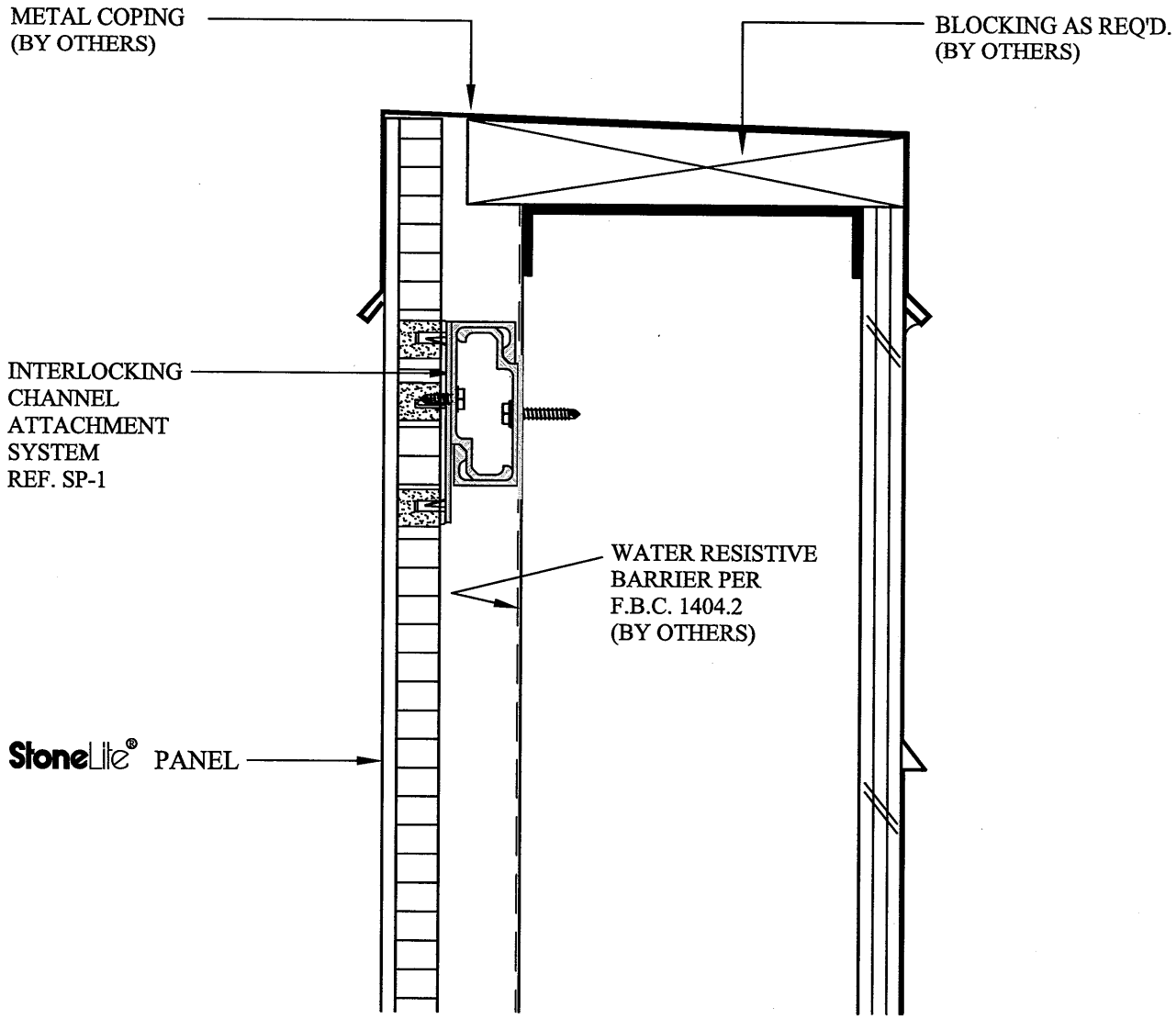

TYPICAL COPING DETAIL

PRODUCT REVISED
as complying with the Florida Building Code
Acceptance No 11-1017.02
Expiration Date 01/09/2017
By _____
Miami Dade Product Control

SP-10	TYPICAL COPING DETAIL

Stonepanels® Inc.
100 S. Royal Lane
Coppell, TX 75019
469.635.5000
www.stonepanels.com
Global Supplier of StoneLite® Marble, Granite & Limestone Panels

6-6-2012

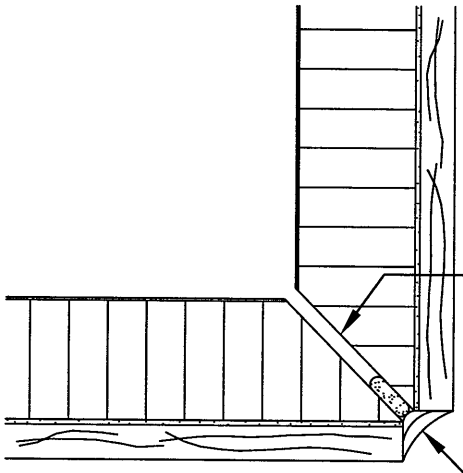

90° OUTSIDE CORNER
QUIRK MITERED PANEL

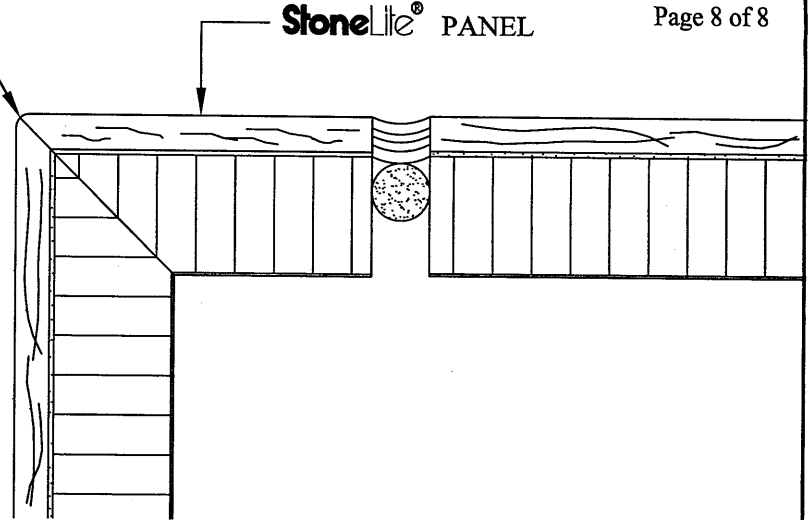

FINISHED CORNER

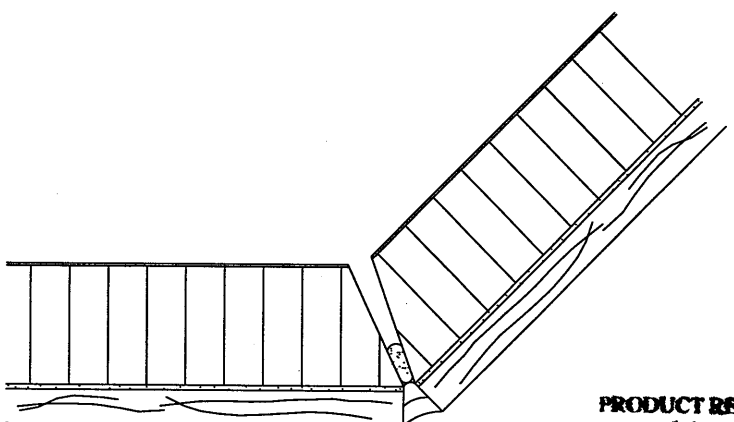

45° OUTSIDE CORNER

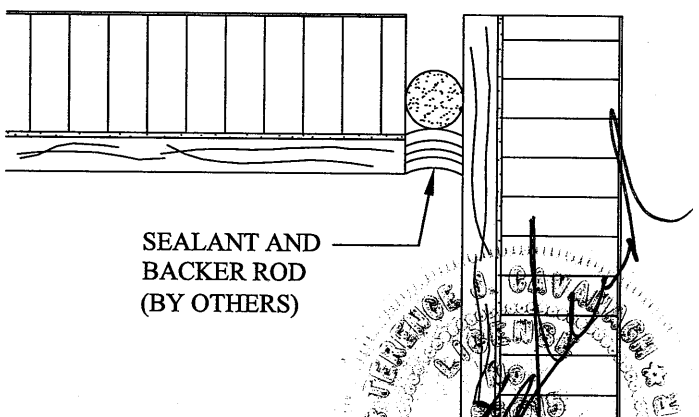

INSIDE CORNER

PRODUCT REVISED
as complying with the Florida Building Code
Acceptance No 11-1017.02
Expiration Date 01/09/2017
By _____
Miami Dade Product Control

SP-41	TYPICAL CORNER DETAILS

Stone panels® Inc.
100 S. Royal Lane
Coppell, TX 75019
469.635.5000
www.stonepanels.com
Global Supplier of StoneLite® Marble, Granite & Limestone Panels

6-6-2012