MIAMI-DADE COUNTY
DEPARTMENT OF PERMITTING, ENVIRONMENT, AND REGULATORY AFFAIRS (PERA)
BOARD AND CODE ADMINISTRATION DIVISION

MIAMI-DADE COUNTY, Florida
PRODUCT CONTROL SECTION
11805 SW 26 Street, Room 208
Miami, Florida 33175-2474
T (786) 315-2590 F (786) 315-2599
www.miamidade.gov/pera/

NOTICE OF ACCEPTANCE (NOA)

PGT Industries
1070 Technology Drive
Nokomis, FL 34275

SCOPE:

This NOA is being issued under the applicable rules and regulations governing the use of construction materials. The documentation submitted has been reviewed and accepted by Miami-Dade County PERA-Product Control Section to be used in Miami-Dade County and other areas where allowed by the Authority Having Jurisdiction (AHJ).

This NOA shall not be valid after the expiration date stated below. The Miami-Dade County Product Control Section (In Miami-Dade County) and/or the AHJ (in areas other than Miami-Dade County) reserve the right to have this product or material tested for quality assurance purposes. If this product or material fails to perform in the accepted manner, the manufacturer will incur the expense of such testing and the AHJ may immediately revoke, modify, or suspend the use of such product or material within their jurisdiction. PERA reserves the right to revoke this acceptance, if it is determined by Miami-Dade County Product Control Section that this product or material fails to meet the requirements of the applicable building code.

This product is approved as described herein, and has been designed to comply with the Florida Building Code, including the High Velocity Hurricane Zone.

DESCRIPTION: Series "SGD-680" Aluminum Sliding Glass Door – N.I.

APPROVAL DOCUMENT: Drawing No. **8100-12**, titled "Alum. Sliding Glass Door, Non-Impact", sheets 1through 20 of 20, dated 08/22/2007 with revision "**A**" dated 10/13/2011, prepared by PGT Industries, signed and sealed by Anthony Lynn Miller, P. E., bearing the Miami-Dade County Product Control Revision stamp with the Notice of Acceptance number and Expiration date by the Miami-Dade County Product Control Section.

MISSILE IMPACT RATING: None.

LABELING: Each unit shall bear a permanent label with the manufacturer's name or logo, city, state, model/ series and following statement: "Miami-Dade County Product Control Approved" unless otherwise noted herein.

RENEWAL of this NOA shall be considered after a renewal application has been filed and there has been no change in the applicable building code negatively affecting the performance of this product.

TERMINATION of this NOA will occur after the expiration date or if there has been a revision or change in the materials, use, and/or manufacture of the product or process. Misuse of this NOA as an endorsement of any product, for sales, advertising or any other purposes shall automatically terminate this NOA. Failure to comply with any section of this NOA shall be cause for termination and removal of NOA.

ADVERTISEMENT: The NOA number preceded by the words Miami-Dade County, Florida, and followed by the expiration date may be displayed in advertising literature. If any portion of the NOA is displayed, then it shall be done in its entirety.

INSPECTION: A copy of this entire NOA shall be provided to the user by the manufacturer or its distributors and shall be available for inspection at the job site at the request of the Building Official.

This NOA **revises NOA No. 08-1202.12** and consists of this page 1, evidence pages E-1 and E-2, as well as approval document mentioned above.

The submitted documentation was reviewed by **Jaime D. Gascon, P. E.**

MIAMI-DADE COUNTY APPROVED

J. Gascon
11/17/11

NOTICE OF ACCEPTANCE: EVIDENCE SUBMITTED

A. DRAWINGS

1. Manufacturer's die drawings and sections.
   (Submitted under previous NOA No. 08–1202.12)
2. Drawing No. **8100–12**, titled "Alum. Sliding Glass Door, Non–Impact", sheets 1through 20 of 20, dated 08/22/2007 with revision "**A**" dated 10/13/2011, prepared by PGT Industries, signed and sealed by Anthony Lynn Miller, P. E.

B. TESTS

1. Test reports on: 1) Air Infiltration Test, per FBC, TAS 202–94
   2) Uniform Static Air Pressure Test, Loading per FBC TAS 202–94
   3) Water Resistance Test, per FBC, TAS 202–94
   4) Large Missile Impact Test per FBC, TAS 201–94
   5) Cyclic Wind Pressure Loading per FBC, TAS 203–94
   6) Forced Entry Test, per FBC 2411 3.2.1, TAS 202–94

   along with marked–up drawings and installation diagram of Aluminum SGD, prepared by Architectural Testing, Inc., Test Report No. **ATI–8124.01–401–18**, dated 11/13/2008, signed and sealed by Joseph A. Reed, P.E.
   (Submitted under previous NOA No.08–1202.12)
2. Test reports on: 1) Air Infiltration Test, per FBC, TAS 202–94
   2) Uniform Static Air Pressure Test, Loading per FBC TAS 202–94
   3) Water Resistance Test, per FBC, TAS 202–94
   4) Large Missile Impact Test per FBC, TAS 201–94
   5) Cyclic Wind Pressure Loading per FBC, TAS 203–94
   6) Forced Entry Test, per FBC 2411 3.2.1, TAS 202–94

   along with marked–up drawings and installation diagram of Aluminum SGD, prepared by Fenestration Testing Laboratory, Inc., Test Reports No.'s **FTL–5618**, dated 06/21/2008 and **FTL–5619,** dated 07/07/2008 respectively, signed and sealed by Carlos S. Rionda, P. E.
   (Submitted under previous NOA No.08–1202.12)

C. CALCULATIONS

1. Anchor verification calculations and structural analysis, complying with FBC–2007, prepared by PGT Industries, dated 11/26/2008, signed and sealed by Lucas A. Turner, P. E.
   (Submitted under previous NOA No. 08–1202.12)
2. **Glazing complies with ASTM E1300–02/ 04**
   (Submitted under previous NOA No. 08–1202.12)

Jaime D. Gascon, P. E.
Product Control Section Supervisor
NOA No. 11–1018.13
Expiration Date: March 18, 2014
Approval Date: November 24, 2011

NOTICE OF ACCEPTANCE: EVIDENCE SUBMITTED

D. QUALITY ASSURANCE

1. Miami–Dade Department of Permitting, Environment, and Regulatory Affairs (PERA).

E. MATERIAL CERTIFICATIONS

1. None.

F. STATEMENTS

1. Statement letter of conformance and compliance with the FBC–2007 and FBC–2010, dated 10/14/2011, signed and sealed by Anthony Lynn Miller, P. E.
2. Statement letter of no financial interest, dated 10/14/2011, signed and sealed by Anthony Lynn Miller, P. E.
3. Letter of Adoption of as his Own, the Work of another Engineer per Section 61G15–27.001 of the FBPE, dated 10/07/2011 signed and sealed by Anthony Lynn Miller, P. E.
4. Statement letter of no financial interest, conformance and compliance with the FBC–2007, dated 11/26/2008, signed and sealed by Lucas A. Turner, P. E.
   (Submitted under previous NOA No. 08–1202.12)
5. Laboratory compliance letter for Test Report No. **ATI–8124.01–401–18**, issued by Architectural Testing, Inc., dated 11/13/2008, signed and sealed by Joseph A. Reed, P. E.
   (Submitted under previous NOA No. 08–1202.12)
6. Laboratory compliance letter for Test Reports No.'s **FTL–5618**, dated 06/21/2008 and **FTL–5619**, dated 07/07/2008, issued by Fenestration Testing Laboratory, Inc., respectively, signed and sealed by Carlos S. Rionda, P.E.
   (Submitted under previous NOA No. 08–1202.12)

G. OTHERS

1. Notice of Acceptance No. **08–1202.12**, issued to PGT Industries for their Series **"SGD – 680 Aluminum Sliding Glass Door, Non – Impact"**, approved on 03/18/2009 and expiring on 03/18/2014.

Jaime D. Gascon, P. E.
Product Control Section Supervisor
NOA No. 11–1018.13
Expiration Date: March 18, 2014
Approval Date: November 24, 2011

GENERAL NOTES: NON-IMPACT SLIDING GLASS DOOR

1. GLAZING TYPE OPTIONS: 37. 3/16" TEMPERED GLASS
   38. 1/4" TEMPERED GLASS
   39. 3/16" I.G. TEMPERED GLASS (7/8" NOM., 3/16" TEMPERED + 1/2" AIR SPACE + 3/16" TEMPERED)
   40. 1/4" I.G. TEMPERED GLASS (7/8" NOM., 1/4" TEMPERED + 3/8" AIR SPACE + 1/4"TEMPERED)

2. DESIGN PRESSURES: SEE TABLES 1 THROUGH 4 ON SHEETS 3 THROUGH 6
   A. NEGATIVE DESIGN LOADS BASED ON TESTED PRESSURE AND GLASS TABLES ASTM E 1300-02.
   B. POSITIVE DESIGN LOADS BASED ON WATER TEST PRESSURE AND GLASS TABLES ASTM E 1300-02.

3. ANCHORAGE: THE 33 1/3% STRESS INCREASE HAS NOT BEEN USED IN THE DESIGN OF THIS PRODUCT. MATERIALS, INCLUDING BUT NOT LIMITED TO STEEL SCREWS, THAT COME INTO CONTACT WITH OTHER DISSIMILAR MATERIALS SHALL MEET THE REQUIREMENTS OF THE FLORIDA BUILDING CODE. FOR ANCHORAGE DETAILS SEE SHEETS 3 THROUGH 9.

4. MIAMI-DADE COUNTY APPROVED SHUTTERS ARE REQUIRED IN MIAMI-DADE COUNTY AND WHERE IMPACT RESISTANCE IS REQUIRED

5. INSTALLATION SCREWS, FRAME AND PANEL CORNERS SEALED WITH NARROW JOINT SEALANT.

6. REFERENCES: TEST REPORTS FTL-5618, ATI-81241.01-401-18-R1
   ELCO TEXTRON NOA: 07-0425.01, 03-0225.05, ANSI/AF&PA NDS-2005 FOR WOOD CONSTRUCTION AND ADM-2005 ALUMINUM DESIGN MANUAL

7. THIS PRODUCT HAS BEEN DESIGNED & TESTED TO COMPLY WITH THE REQUIREMENTS OF THE FLORIDA BUILDING CODE, INCLUDING THE HIGH VELOCITY HURRICANE ZONE (HVHZ).

8. DOOR SIZES MUST BE VERIFIED FOR COMPLIANCE WITH EGRESS REQUIREMENTS PER FLORIDA BUILDING CODE, AS APPLICABLE.

9. CONFIGURATIONS: STRAIGHT DOORS - MAXIMUM 4 TRACKS BY 10 FT. (120") HIGH WITH A MAXIMUM OF EIGHT 5 FT. NOMINAL WIDE DOOR PANELS.
   INSIDE OR OUTSIDE CORNER DOORS - MAXIMUM OF 4 TRACKS BY 10 FT. (120") HIGH WITH A MAXIMUM OF FOUR 4 FT. PANELS EACH SIDE OF CORNER.
   SEE EXAMPLE CONFIGURATIONS BELOW AND PANEL CONFIGURATIONS SHEET 9.

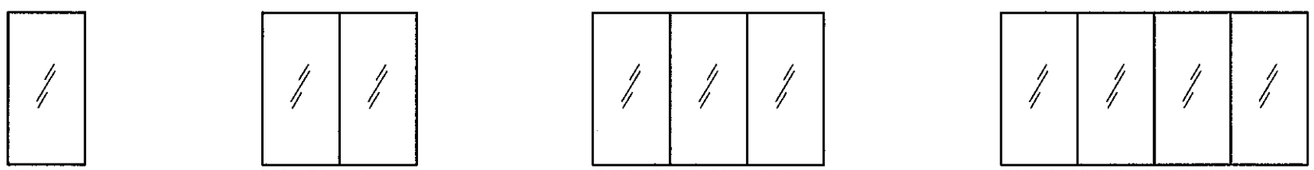

X — XO, OX, XX — OXO, OXX, OXX, XXX — OXXO, XXXO, OXXX, XXXX

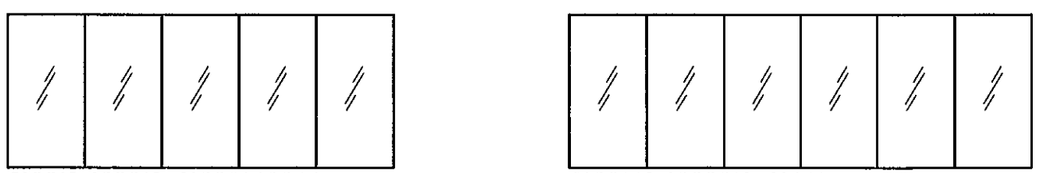

OXXXO, XXXXO, OXXXX, XXXXX — OXXXXO, XXXXXO, OXXXXX, XXXXXX

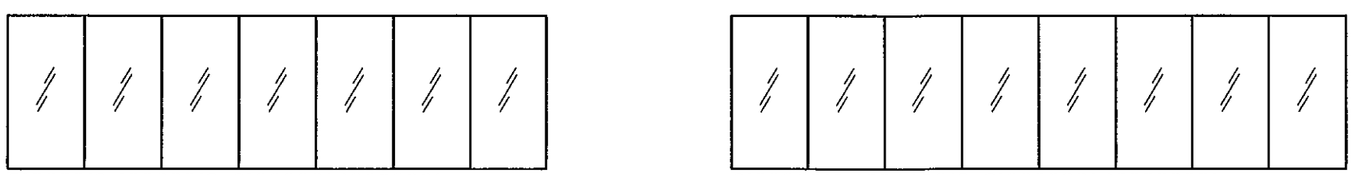

OXXXXXO, XXXXXXO, OXXXXXX, XXXXXXX — OXXXXXXO, XXXXXXXO, OXXXXXXX, XXXXXXXX

NOA DRAWING INDEX

	SHEET
GENERAL NOTES	1
GLAZING DETAILS	2
ANCHORAGE	3-10
DESIGN PRESSURES	3-6
ELEVATIONS	11
CONFIGURATIONS	12
HORIZ. SECTIONS	14-16
VERT. SECTIONS	16-17
PARTS LIST	18
EXTRUSIONS	19-20

PRODUCT REVISED
as complying with the Florida
Building Code
Acceptance No. 11-1018.13
Expiration Date 03/18/2014
By
Miami Dade Product Control

ANTHONY LYNN MILLER
LICENSE
No. 58705
10/14/11
STATE OF FLORIDA
PROFESSIONAL ENGINEER
A. LYNN MILLER, P.E.
P.E.# 58705

Revsd By:	Date:	Revisions:	
Revsd By:	Date:	Revisions:	
Revsd By: J.J.	Date: 10/13/11	Revisions: A	FBC 2010 CODE CHANGE
Drawn By: F.K.	Date: 8/22/07	Checked By: J.J.	Date: XX/XX/07

1070 TECHNOLOGY DRIVE
NOKOMIS, FL 34275

P.O. BOX 1529
NOKOMIS, FL 34274

PGT
Visibly Better

Description: GENERAL NOTES AND INDEX

Title: ALUM. SLIDING GLASS DOOR, NON-IMPACT

Series/Model:	Scale:	Sheet:	Drawing No.	Rev:
SGD680	NTS	1 of 20	8100-12	A

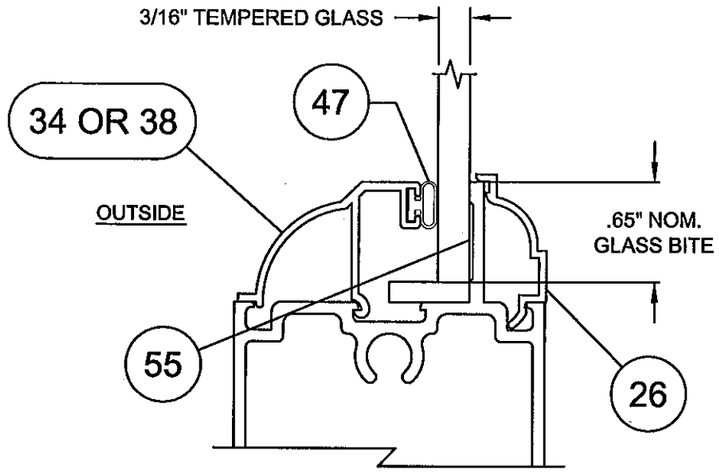

GLASS TYPE 37, 3/16" TEMPERED GLAZING DETAIL

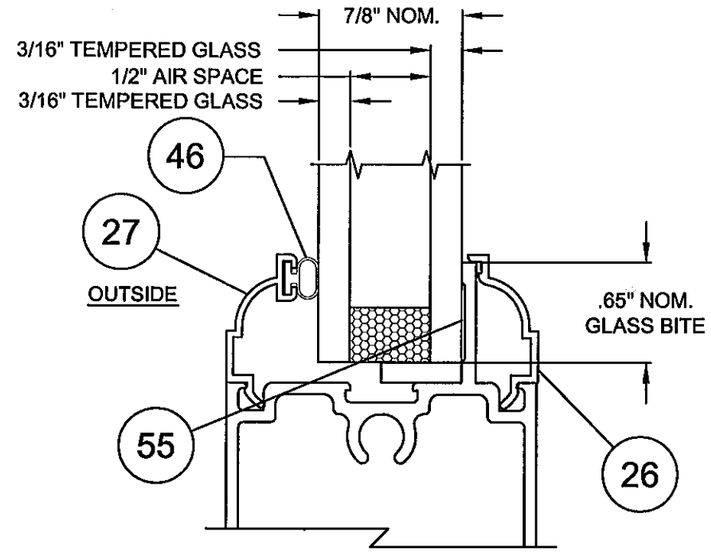

GLASS TYPE 39, 3/16" TEMPERED I.G. GLAZING DETAIL

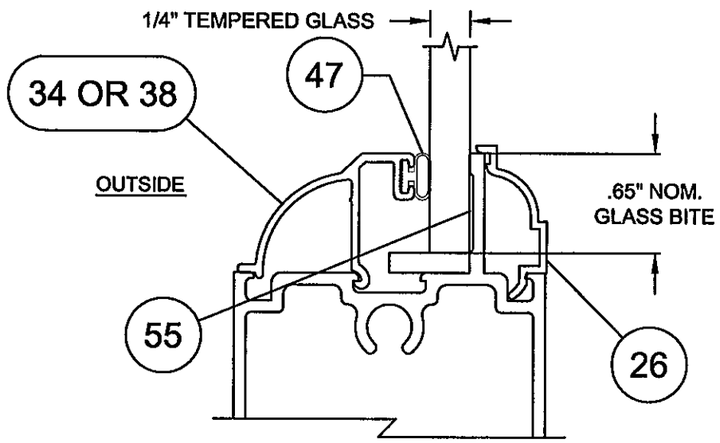

GLASS TYPE 38, 1/4" TEMPERED GLAZING DETAIL

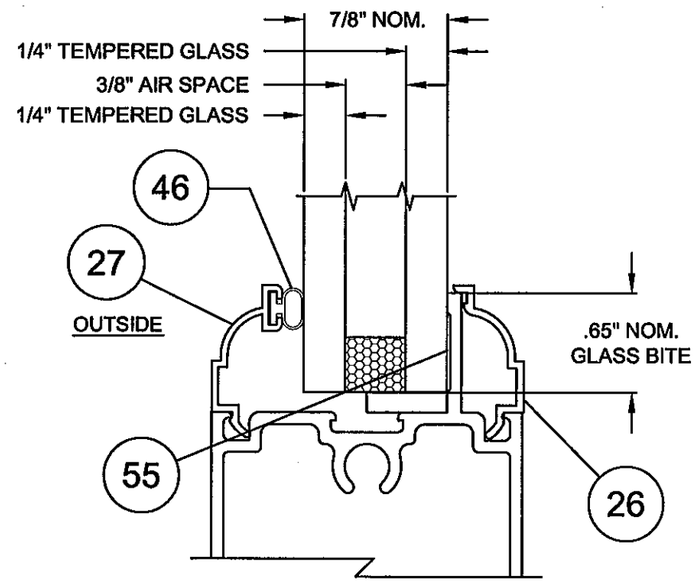

GLASS TYPE 40,1/4" TEMPERED I.G. GLAZING DETAIL

PRODUCT REVISED
as complying with the Florida
Building Code
Acceptance No 11-1018.13
Expiration Date 03/18/2014
By
Miami Dade Product Control

ANTHONY LYNN MILLER
LICENSE
No. 58705
10/14/11
STATE OF
FLORIDA
PROFESSIONAL ENGINEER
A. LYNN MILLER, P.E.
P.E.# 58705

Revsd By:	Date:	Revisions:	
Revsd By:	Date:	Revisions:	
Revsd By: J.J.	Date: 10/13/11	Revisions: A	NO CHANGE THIS SHEET
Drawn By: F.K.	Date: 8/22/07	Checked By: J.J.	Date: XX/XX/07

1070 TECHNOLOGY DRIVE
NOKOMIS, FL 34275

P.O. BOX 1529
NOKOMIS, FL 34274

PGT
Visibly Better

Description: GLAZING DETAILS

Title: ALUM. SLIDING GLASS DOOR, NON-IMPACT

Series/Model:	Scale:	Sheet:	Drawing No.	Rev:
SGD680	1x	2 of 20	8100-12	A

DESIGN PRESSURE AND ANCHORAGE - NO REINFORCEMENT

TABLE 1.

5 1/4" SILL (SEE NOTES BELOW FOR OTHER SILLS)

3/16" Tempered, 1/4" Tempered, 3/16" Tempered I.G., 1/4" Tempered I.G.

GLASS TYPES: 37, 38, 39, 40

>HEAD & SILL (H&S) INTERLOCK & STRAIGHT & CORNER ASTRAGAL CLUSTER PLUS ANCHOR QTY. PER PANEL
>JAMB ANCHOR QTY. >P-HOOK ANCHOR QTY. (SEE DETAIL SHT. 9)

		DOOR HEIGHT											
		80" (68)			84" (70)			90" (76)			96" (80)		
NOM. PANEL WIDTH	FRAME SIDE	1, CONC	2, CONC	2,3, WOOD	1, CONC	2, CONC	2,3, WOOD	1, CONC	2, CONC	2,3, WOOD	1, CONC	2, CONC	2,3, WOOD
DESIGN PRESS.		+120/-200			+120/-200			+120/-200			+120/-197.1		
24" (20)	H&S	C3+1	C2+1	C5+2	C3+1	C2+1	C6+2	C3+1	C2+1	C6+2	C3+1	C2+1	C7+2
	JAMB	12	9	10	13	9	10	14	10	11	15	11	12
	P-HOOK	4	4	7	4	4	7	5	5	7	5	5	8
DESIGN PRESS.		+120/-200			+120/-192			+120/-176.6			+120/-163.6		
30" (26)	H&S	C4+1	C2+1	C7+2	C4+1	C2+1	C7+2	C4+1	C2+1	C7+2	C4+1	C2+1	C7+2
	JAMB	15	11	12	16	11	12	16	11	12	16	11	12
	P-HOOK	5	4	8	5	4	8	5	5	8	5	5	8
DESIGN PRESS.		+120/-168			+120/-160.2			+120/-151.1			+120/-141.5		
36" (30)	H&S	C4+1	C2+1	C7+2	C4+1	C2+1	C7+2	C4+1	C2+1	C7+2	C4+1	C3+1	C7+2
	JAMB	15	11	12	16	11	12	16	11	12	16	11	12
	P-HOOK	5	4	8	5	4	8	5	5	8	5	5	8
DESIGN PRESS.		+120/-150.2			+120/-148.9			+120/-132.8			+115.2/-120.6		
42" (36)	H&S	C3+2	C2+1	C6+3	C3+2	C3+1	C7+3	C3+2	C2+1	C6+3	C4+1	C2+1	C7+2
	JAMB	16	11	12	17	12	13	16	12	13	16	11	12
	P-HOOK	5	4	8	5	4	9	5	5	8	5	5	8
DESIGN PRESS.		+105/-115			+105/-115			+105/-115			+105/-115		
48" (40)	H&S	C2+2	C2+1	C5+3	C3+2	C2+1	C6+3	C3+2	C2+1	C6+3	C3+2	C3+1	C7+3
	JAMB	14	10	11	15	11	12	16	12	12	17	12	13
	P-HOOK	5	4	7	5	4	8	5	5	8	5	5	9

TABLE 1A.

SILL HT. VS POS. DP

SILL HEIGHT	POS. DESIGN PRESSURE
1 5/8"	N/A
2 3/4"	+50.0 PSF
3 1/2"	+73.3 PSF
4 1/2"	+100.0 PSF
5 1/4"	+120.0 PSF
SEE NOTES 1-3	

NOTES:

1. POSITIVE PRESSURES IN TABLES ARE BASED ON THE USE OF THE 5 1/4" SILL.
2. WHEN USING THE 2 3/4" SILL, POSITIVE DP IS 50.0 PSF MAX., WITH THE 3 1/2" SILL, POSITIVE DP IS 73.3 PSF MAX AND WITH THE 4 1/2" SILL, POSITIVE DP IS 100.0 PSF MAX (NEGATIVE PRESSURES UNCHANGED). SEE TABLE 1A.
3. 2 3/4", 3 1/2", 4 1/2" AND 5 1/4" SILL HEIGHTS ARE TESTED FOR WATER INFILTRATION WHEREAS THE 1 5/8" SILL IS NOT AND MUST ONLY BE USED WHERE WATER RESISTANCE IS NOT REQUIRED. POSITIVE DESIGN PRESSURES SHOWN IN TABLE 1 MAY BE USED WHEN THE DOOR IS PROTECTED BY AN OVERHANG COMPLYING WITH THE FLORIDA BUILDING CODE (SEE ADJACENT DIAGRAM); THIS CONDITION IS NOT RATED FOR WATER INFILTRATION.
4. ANCHOR TYPES: 1. 1/4" ELCO ULTRACON (FORMERLY TAPCON) 2. 1/4" ELCO SS4 CRETE-FLEX 3. #12 STEEL SCREW (G5)
5. SEE SHEETS 7 THROUGH 10 FOR ANCHORAGE SPACING AND EMBEDMENT INFORMATION.

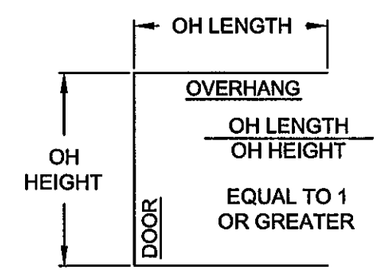

SEE NOTE 3

PRODUCT REVISED
as complying with the Florida
Building Code
Acceptance No 11-1018.13
Expiration Date 03/18/2014
By
Miami Dade Product Control

ANTHONY LYNN MILLER
LICENSE
No. 58705
10/14/11
STATE OF
FLORIDA
PROFESSIONAL ENGINEER
A. LYNN MILLER, P.E.
P.E.# 58705

Revsd By:	Date:	Revisions:	
Revsd By:	Date:	Revisions:	
Revsd By: J.J.	Date: 10/13/11	Revisions: A	NO CHANGE THIS SHEET
Drawn By: F.K.	Date: 8/22/07	Checked By:	Date:

1070 TECHNOLOGY DRIVE
NOKOMIS, FL 34275

P.O. BOX 1529
NOKOMIS, FL 34274

PGT
Visibly Better

Description: DP AND ANCHORAGE TABLE 1

Title: ALUM. SLIDING GLASS DOOR, NON-IMPACT

Series/Model:	Scale:	Sheet:	Drawing No.	Rev:
SGD680	NTS	3 of 20	8100-12	A

DESIGN PRESSURE AND ANCHORAGE - FULL REINFORCEMENT - 5 1/4" SILL (SEE NOTES BELOW FOR OTHER SILLS)

TABLE 2.

3/16" Tempered
GLASS TYPE: 37

>HEAD & SILL (H&S) INTERLOCK & STRAIGHT & CORNER ASTRAGAL CLUSTER PLUS ANCHOR QTY. PER PANEL
>JAMB ANCHOR QTY. >P-HOOK ANCHOR QTY. (SEE DETAIL SHT. 9)

		DOOR HEIGHT																							
		80" (68)			84" (70)			90" (76)			96" (80)			102" (86)			108" (90)			114" (96)			120" (100)		
NOM. PANEL WIDTH	FRAME SIDE	1, CONC	2, CONC	2,3, WOOD	1, CONC	2, CONC	2,3, WOOD	1, CONC	2, CONC	2,3, WOOD	1, CONC	2, CONC	2,3, WOOD	1, CONC	2, CONC	2,3, WOOD	1, CONC	2, CONC	2,3, WOOD	1, CONC	2, CONC	2,3, WOOD	1, CONC	2, CONC	2,3, WOOD
DESIGN PRESS.		+120/-200			+120/-200			+120/-200			+120/-200			+120/-200			+120/-200			+120/-200			+120/-200		
24" (20)	H&S	C4+1	C4+1	C5+2	C4+1	C4+1	C6+2	C4+1	C4+1	C6+2	C4+1	C4+1	C7+2	C4+1	C4+1	C7+2	C4+1	C4+1	C8+2	C4+1	C4+1	C8+2	C5+1	C4+1	C9+2
	JAMB	12	9	10	13	9	10	14	10	11	15	11	12	16	12	13	17	12	13	18	13	14	19	14	15
	P-HOOK	4	4	7	4	4	7	5	5	7	5	5	8	5	5	8	5	5	9	6	6	9	6	6	10
DESIGN PRESS.		+120/-200			+120/-200			+120/-200			+120/-187.4			+120/-187.4			+120/-187.4			+120/-178.4			+120/-168.2		
30" (26)	H&S	C4+1	C4+1	C7+2	C4+1	C4+1	C7+2	C4+1	C4+1	C8+2	C4+1	C4+1	C8+2	C5+1	C4+1	C9+2	C5+1	C4+1	C9+2	C5+1	C4+1	C9+2	C5+1	C4+1	C9+2
	JAMB	15	11	12	16	11	12	17	12	13	17	12	13	19	13	14	20	14	15	20	14	15	20	14	15
	P-HOOK	5	4	8	5	4	8	5	5	9	5	5	9	6	5	9	6	5	10	6	6	10	6	6	10
DESIGN PRESS.		+120/-168			+120/-160.2			+120/-151.1			+120/-143.3			+120/-135.2			+120/-129.8			+120/-126			+120/-122.9		
36" (30)	H&S	C4+1	C4+1	C7+2	C4+1	C4+1	C7+2	C4+1	C4+1	C7+2	C4+1	C4+1	C7+2	C4+1	C4+1	C7+2	C4+1	C4+1	C7+2	C4+1	C4+1	C8+2	C4+1	C4+1	C8+2
	JAMB	15	11	12	16	11	12	16	11	12	16	12	13	16	12	13	17	12	13	17	12	13	18	13	14
	P-HOOK	5	4	8	5	4	8	5	5	8	5	5	8	5	5	8	5	5	9	6	6	9	6	6	9
DESIGN PRESS.		+120/-159.3			+120/-148.9			+120/-132.8			+120/-120.6			+110.1/-110.1			+102.7/-102.7			+97.9/-97.9			+93.4/-93.4		
42" (36)	H&S	C4+2	C4+1	C7+3	C4+2	C4+1	C7+3	C4+2	C4+1	C6+3	C4+1	C4+1	C7+2	C4+1	C4+1	C7+2	C4+1	C4+1	C7+2	C4+1	C4+1	C7+2	C4+1	C4+1	C7+2
	JAMB	17	12	13	17	12	13	16	12	13	16	11	12	16	11	12	16	11	12	16	11	12	16	11	12
	P-HOOK	5	4	9	5	4	9	5	5	8	5	5	8	5	5	8	5	5	8	6	6	8	6	6	8
DESIGN PRESS.		+120/-156.7			+120/-147.5			+120/-131.9			+118.9/-118.9			+105/-107.4			+98.5/-98.5			+90.5/-90.5			+83.1/-83.1		
48" (40)	H&S	C4+2	C4+2	C7+4	C4+2	C4+1	C8+3	C4+2	C4+1	C8+3	C4+2	C4+1	C7+3	C4+2	C4+1	C7+3	C4+1	C4+1	C8+2	C4+1	C4+1	C7+2	C4+1	C4+1	C7+2
	JAMB	19	13	14	19	13	14	18	13	14	18	13	14	17	12	13	17	12	13	17	12	13	16	12	13
	P-HOOK	6	4	9	6	4	9	6	5	9	6	5	9	5	5	9	5	5	9	6	6	9	6	6	8
DESIGN PRESS.		+120/-142			+120/-142			+120/-128.9			+111.6/-118.9														
54" (46)	H&S	C4+2	C4+2	C7+4	C4+2	C4+2	C8+4	C4+2	C4+2	C8+4	C4+2	C4+2	C7+4												
	JAMB	19	14	15	20	14	15	20	14	15	20	14	15												
	P-HOOK	6	4	10	6	5	10	6	5	10	6	5	10												
DESIGN PRESS.		+105/-115			+105/-115			+105/-115			+105/-113.8														
60" (50)	H&S	C4+2	C4+2	C6+4	C4+2	C4+2	C7+4	C4+2	C4+2	C8+4	C4+2	C4+2	C8+4												
	JAMB	17	12	13	18	13	14	20	14	15	21	15	16												
	P-HOOK	5	4	9	6	4	9	6	5	10	6	5	11												

SEE EXAMPLE OX-XO CORNER ANCHORAGE PLAN AND OXX STRAIGHT DOOR ANCHORAGE PLAN ON SHEET 7

PANELS OVER 48" WIDE NOT AVAILABLE OVER 96" HIGH

TABLE 2A. SILL HT. VS POS. DP

SILL HEIGHT	POS. DESIGN PRESSURE
1 5/8"	N/A
2 3/4"	+50.0 PSF
3 1/2"	+73.3 PSF
4 1/2"	+100.0 PSF
5 1/4"	+120.0 PSF
SEE NOTES 1-3	

NOTES:

1. POSITIVE PRESSURES IN TABLES ARE BASED ON THE USE OF THE 5 1/4" SILL.
2. WHEN USING THE 2 3/4" SILL, POSITIVE DP IS 50.0 PSF MAX., WITH THE 3 1/2" SILL, POSITIVE DP IS 73.3 PSF MAX AND WITH THE 4 1/2" SILL, POSITIVE DP IS 100.0 PSF MAX (NEGATIVE PRESSURES UNCHANGED). SEE TABLE 2A.
3. 2 3/4", 3 1/2", 4 1/2" AND 5 1/4" SILL HEIGHTS ARE TESTED FOR WATER INFILTRATION WHEREAS THE 1 5/8" SILL IS NOT AND MUST ONLY BE USED WHERE WATER RESISTANCE IS NOT REQUIRED. POSITIVE DESIGN PRESSURES SHOWN IN TABLE 2 MAY BE USED WHEN THE DOOR IS PROTECTED BY AN OVERHANG COMPLYING WITH THE FLORIDA BUILDING CODE (SEE ADJACENT DIAGRAM); THIS CONDITION IS NOT RATED FOR WATER INFILTRATION.
4. ANCHOR TYPES: 1. 1/4" ELCO ULTRACON (FORMERLY TAPCON) 2. 1/4" ELCO SS4 CRETE-FLEX 3. #12 STEEL SCREW (G5)
5. SEE SHEETS 7 THROUGH 10 FOR ANCHORAGE SPACING AND EMBEDMENT INFORMATION.

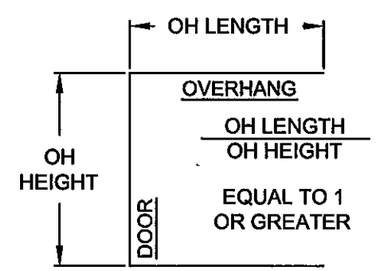

SEE NOTE 3

PRODUCT REVISED
as complying with the Florida Building Code
Acceptance No 11-1018.13
Expiration Date 03/18/2014
By
Miami Dade Product Control

ANTHONY LYNN MILLER
LICENSE
No. 58705
10/14/11
STATE OF FLORIDA
PROFESSIONAL ENGINEER
A. LYNN MILLER, P.E.
P.E.# 58705

Revsd By:	Date:	Revisions:	
Revsd By:	Date:	Revisions:	
Revsd By: J.J.	Date: 10/13/11	Revisions: A	NO CHANGE THIS SHEET
Drawn By: F.K.	Date: 8/22/07	Checked By:	Date:

1070 TECHNOLOGY DRIVE
NOKOMIS, FL 34275
P.O. BOX 1529
NOKOMIS, FL 34274

PGT Visibly Better

Description: DP AND ANCHORAGE TABLE 2

Title: ALUM. SLIDING GLASS DOOR, NON-IMPACT

Series/Model:	Scale:	Sheet:	Drawing No.	Rev:
SGD680	NTS	4 of 20	8100-12	A

DESIGN PRESSURE AND ANCHORAGE - FULL REINFORCEMENT - 5 1/4" SILL (SEE NOTES BELOW FOR OTHER SILLS)

TABLE 3.

1/4" Tempered
GLASS TYPE: 38

>HEAD & SILL (H&S) INTERLOCK & STRAIGHT & CORNER ASTRAGAL CLUSTER PLUS ANCHOR QTY. PER PANEL
>JAMB ANCHOR QTY. >P-HOOK ANCHOR QTY. (SEE DETAIL SHT. 9)

NOM. PANEL WIDTH	FRAME SIDE	DOOR HEIGHT 80" (68) 1, CONC	80" (68) 2, CONC	80" (68) 2,3, WOOD	84" (70) 1, CONC	84" (70) 2, CONC	84" (70) 2,3, WOOD	90" (76) 1, CONC	90" (76) 2, CONC	90" (76) 2,3, WOOD	96" (80) 1, CONC	96" (80) 2, CONC	96" (80) 2,3, WOOD
DESIGN PRESS.		+120/-200			+120/-200			+120/-200			+120/-200		
24" (20)	H&S	C4+1	C4+1	C5+2	C4+1	C4+1	C6+2	C4+1	C4+1	C6+2	C4+1	C4+1	C7+2
	JAMB	12	9	10	13	9	10	14	10	11	15	11	12
	P-HOOK	4	4	7	4	4	7	5	5	7	5	5	8
DESIGN PRESS.		+120/-200			+120/-200			+120/-200			+120/-187.4		
30" (26)	H&S	C4+1	C4+1	C7+2	C4+1	C4+1	C7+2	C4+1	C4+1	C8+2	C4+1	C4+1	C8+2
	JAMB	15	11	12	16	11	12	17	12	13	17	12	13
	P-HOOK	5	4	8	5	4	8	5	5	9	5	5	9
DESIGN PRESS.		+120/-200			+120/-191.7			+120/-175.7			+120/-162.2		
36" (30)	H&S	C5+1	C4+1	C9+2	C5+1	C4+1	C9+2	C4+1	C4+1	C9+2	C4+1	C4+1	C8+2
	JAMB	18	13	14	19	13	14	18	13	14	18	13	15
	P-HOOK	6	4	9	6	4	9	6	5	9	6	5	9
DESIGN PRESS.		+120/-183.8			+120/-172.1			+120/-157.1			+120/-144.6		
42" (36)	H&S	C4+2	C4+1	C8+3	C4+2	C4+1	C8+3	C4+2	C4+1	C8+3	C5+1	C4+1	C9+2
	JAMB	19	14	15	19	14	15	19	13	16	19	13	14
	P-HOOK	6	4	10	6	4	10	6	5	10	6	5	10
DESIGN PRESS.		+120/-169.4			+120/-158.1			+120/-143.8			+120/-131.8		
48" (40)	H&S	C4+2	C4+2	C8+4	C4+2	C4+1	C9+3	C5+2	C4+1	C8+3	C4+2	C4+1	C8+3
	JAMB	20	14	15	20	14	15	20	14	15	20	14	15
	P-HOOK	6	5	10	6	5	10	6	5	10	6	5	10
DESIGN PRESS.		+120/-142			+120/-142			+120/-133.9			+111.6/-122.2		
54" (46)	H&S	C4+2	C4+2	C7+4	C4+2	C4+2	C8+4	C4+2	C4+2	C8+4	C4+2	C4+2	C8+4
	JAMB	19	14	15	20	14	15	21	15	16	20	14	16
	P-HOOK	6	4	10	6	5	10	6	5	10	6	5	10
DESIGN PRESS.		+105/-115			+105/-115			+105/-115			+105/-115		
60" (50)	H&S	C4+2	C4+2	C6+4	C4+2	C4+2	C7+4	C4+2	C4+2	C8+4	C4+2	C4+2	C8+4
	JAMB	17	12	13	18	13	14	20	14	15	21	15	16
	P-HOOK	5	4	9	6	4	9	6	5	10	6	5	11

NOM. PANEL WIDTH	FRAME SIDE	102" (86) 1, CONC	102" (86) 2, CONC	102" (86) 2,3, WOOD	108" (90) 1, CONC	108" (90) 2, CONC	108" (90) 2,3, WOOD	114" (96) 1, CONC	114" (96) 2, CONC	114" (96) 2,3, WOOD	120" (100) 1, CONC	120" (100) 2, CONC	120" (100) 2,3, WOOD
DESIGN PRESS.		+120/-200			+120/-200			+120/-200			+120/-200		
24" (20)	H&S	C4+1	C4+1	C7+2	C4+1	C4+1	C8+2	C4+1	C4+1	C8+2	C5+1	C4+1	C9+2
	JAMB	16	12	13	17	12	13	18	13	14	19	14	15
	P-HOOK	5	5	8	5	5	9	6	6	9	6	6	10
DESIGN PRESS.		+120/-187.4			+120/-187.4			+120/-178.4			+120/-168.2		
30" (26)	H&S	C5+1	C4+1	C9+2	C5+1	C4+1	C9+2	C5+1	C4+1	C9+2	C5+1	C4+1	C9+2
	JAMB	19	13	14	20	14	15	20	14	15	20	14	15
	P-HOOK	6	5	9	6	5	10	6	6	10	6	6	10
DESIGN PRESS.		+120/-162.2			+120/-162.2			+120/-153.3			+120/-144.3		
36" (30)	H&S	C5+1	C4+1	C9+2	C5+1	C4+1	C10+2	C5+1	C4+1	C10+2	C5+1	C4+1	C10+2
	JAMB	19	14	15	21	15	16	21	15	16	21	15	16
	P-HOOK	6	5	10	6	5	10	6	6	10	6	6	10
DESIGN PRESS.		+120/-144.6			+120/-141.6			+120/-135.6			+116.4/-127.4		
42" (36)	H&S	C5+1	C4+1	C9+2	C5+1	C4+1	C10+2	C5+1	C4+1	C10+2	C5+1	C4+1	C10+2
	JAMB	20	14	15	21	15	16	21	15	16	21	15	16
	P-HOOK	6	5	10	6	5	11	6	6	11	6	6	11
DESIGN PRESS.		+105/-115			+105/-115			+105/-113.5			+105/-107.1		
48" (40)	H&S	C4+2	C4+1	C7+3	C5+1	C4+1	C9+2	C5+1	C4+1	C9+2	C5+1	C4+1	C9+2
	JAMB	18	13	14	20	14	15	20	15	16	21	15	16
	P-HOOK	6	5	9	6	5	10	6	6	10	6	6	10

PANELS OVER 48" WIDE NOT AVAILABLE OVER 96" HIGH

TABLE 3A. SILL HT. VS POS. DP

SILL HEIGHT	POS. DESIGN PRESSURE
1 5/8"	N/A
2 3/4"	+50.0 PSF
3 1/2"	+73.3 PSF
4 1/2"	+100.0 PSF
5 1/4"	+120.0 PSF
SEE NOTES 1-3	

NOTES:

1. POSITIVE PRESSURES IN TABLES ARE BASED ON THE USE OF THE 5 1/4" SILL.
2. WHEN USING THE 2 3/4" SILL, POSITIVE DP IS 50.0 PSF MAX., WITH THE 3 1/2" SILL, POSITIVE DP IS 73.3 PSF MAX AND WITH THE 4 1/2" SILL, POSITIVE DP IS 100.0 PSF MAX (NEGATIVE PRESSURES UNCHANGED). SEE TABLE 3A.
3. 2 3/4", 3 1/2", 4 1/2" AND 5 1/4" SILL HEIGHTS ARE TESTED FOR WATER INFILTRATION WHEREAS THE 1 5/8" SILL IS NOT AND MUST ONLY BE USED WHERE WATER RESISTANCE IS NOT REQUIRED. POSITIVE DESIGN PRESSURES SHOWN IN TABLE 3 MAY BE USED WHEN THE DOOR IS PROTECTED BY AN OVERHANG COMPLYING WITH THE FLORIDA BUILDING CODE (SEE ADJACENT DIAGRAM); THIS CONDITION IS NOT RATED FOR WATER INFILTRATION.
4. ANCHOR TYPES: 1. 1/4" ELCO ULTRACON (FORMERLY TAPCON) 2. 1/4" ELCO SS4 CRETE-FLEX 3. #12 STEEL SCREW (G5)
5. SEE SHEETS 7 THROUGH 10 FOR ANCHORAGE SPACING AND EMBEDMENT INFORMATION.

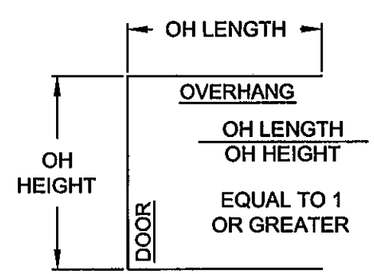

SEE NOTE 3

PRODUCT REVISED
as complying with the Florida Building Code
Acceptance No 11-1018.13
Expiration Date 02/18/2014
By
Miami Dade Product Control

ANTHONY LYNN MILLER
LICENSE
No. 58705
10/14/11
STATE OF FLORIDA
PROFESSIONAL ENGINEER
A. LYNN MILLER, P.E.
P.E.# 58705

Revsd By:	Date:	Revisions:	
Revsd By:	Date:	Revisions:	
Revsd By: J.J.	Date: 10/13/11	Revisions: A	NO CHANGE THIS SHEET
Drawn By: F.K.	Date: 8/22/07	Checked By:	Date:

1070 TECHNOLOGY DRIVE
NOKOMIS, FL 34275
P.O. BOX 1529
NOKOMIS, FL 34274

PGT Visibly Better

Description: DP AND ANCHORAGE TABLE 3
Title: ALUM. SLIDING GLASS DOOR, NON-IMPACT

Series/Model:	Scale:	Sheet:	Drawing No.	Rev:
SGD680	NTS	5 of 20	8100-12	A

DESIGN PRESSURE AND ANCHORAGE - FULL REINFORCEMENT - 5 1/4" SILL (SEE NOTES BELOW FOR OTHER SILLS)

TABLE 4.

3/16" Tempered I.G. & 1/4" Tempered I.G.
GLASS TYPES: 39, 40

>HEAD & SILL (H&S) INTERLOCK & STRAIGHT & CORNER ASTRAGAL CLUSTER PLUS ANCHOR QTY. PER PANEL
>JAMB ANCHOR QTY. >P-HOOK ANCHOR QTY. (SEE DETAIL SHT. 9)

NOM. PANEL WIDTH	FRAME SIDE	DOOR HEIGHT 80" (68) 1, CONC	80" (68) 2, CONC	80" (68) 2,3, WOOD	84" (70) 1, CONC	84" (70) 2, CONC	84" (70) 2,3, WOOD	90" (76) 1, CONC	90" (76) 2, CONC	90" (76) 2,3, WOOD	96" (80) 1, CONC	96" (80) 2, CONC	96" (80) 2,3, WOOD
DESIGN PRESS.		+120/-200			+120/-200			+120/-200			+120/-200		
24" (20)	H&S	C4+1	C4+1	C5+2	C4+1	C4+1	C6+2	C4+1	C4+1	C6+2	C4+1	C4+1	C7+2
	JAMB	12	9	10	13	9	10	14	10	11	15	11	12
	P-HOOK	4	4	7	4	4	7	5	5	7	5	5	8
DESIGN PRESS.		+120/-200			+120/-200			+120/-200			+120/-187.4		
30" (26)	H&S	C4+1	C4+1	C7+2	C4+1	C4+1	C7+2	C4+1	C4+1	C8+2	C4+1	C4+1	C8+2
	JAMB	15	11	12	16	11	12	17	12	13	17	12	13
	P-HOOK	5	4	8	5	4	8	5	5	9	5	5	9
DESIGN PRESS.		+120/-200			+120/-191.7			+120/-175.7			+120/-162.2		
36" (30)	H&S	C4+2	C4+1	C8+3	C4+2	C4+1	C8+3	C4+1	C4+1	C8+3	C4+1	C4+1	C8+2
	JAMB	18	13	14	18	13	14	19	14	14	18	13	14
	P-HOOK	6	4	9	6	4	9	6	5	9	6	5	10
DESIGN PRESS.		+120/-183.8			+120/-172.1			+120/-157.1			+120/-144.6		
42" (36)	H&S	C4+2	C4+1	C8+3	C4+2	C4+1	C8+3	C4+2	C4+1	C8+3	C4+2	C4+1	C8+3
	JAMB	19	14	15	19	14	15	19	13	15	20	13	14
	P-HOOK	6	4	10	6	4	10	6	5	10	6	5	10
DESIGN PRESS.		+120/-169.4			+120/-158.1			+120/-143.8			+120/-131.8		
48" (40)	H&S	C4+2	C4+2	C8+4	C4+2	C4+2	C8+4	C4+2	C4+1	C9+3	C4+2	C4+1	C8+3
	JAMB	20	14	15	20	14	15	20	14	15	20	14	15
	P-HOOK	6	5	10	6	5	10	6	5	10	6	5	10
DESIGN PRESS.		+120/-142			+120/-142			+120/-133.9			+111.6/-122.2		
54" (46)	H&S	C4+2	C4+2	C7+4	C4+2	C4+2	C8+4	C4+2	C4+2	C8+4	C4+2	C4+2	C8+4
	JAMB	19	14	15	20	14	15	21	15	16	20	14	16
	P-HOOK	6	4	10	6	5	10	6	5	10	6	5	10
DESIGN PRESS.		+105/-115			+105/-115			+105/-115			+105/-115		
60" (50)	H&S	C4+2	C4+2	C6+4	C4+2	C4+2	C7+4	C4+2	C4+2	C8+4	C4+2	C4+2	C8+4
	JAMB	17	12	13	18	13	14	20	14	15	21	15	16
	P-HOOK	5	4	9	6	4	9	6	5	10	6	5	11

NOM. PANEL WIDTH	FRAME SIDE	102" (86) 1, CONC	102" (86) 2, CONC	102" (86) 2,3, WOOD	108" (90) 1, CONC	108" (90) 2, CONC	108" (90) 2,3, WOOD	114" (96) 1, CONC	114" (96) 2, CONC	114" (96) 2,3, WOOD	120" (100) 1, CONC	120" (100) 2, CONC	120" (100) 2,3, WOOD
DESIGN PRESS.		+120/-200			+120/-200			+120/-200			+120/-200		
24" (20)	H&S	C4+1	C4+1	C7+2	C4+1	C4+1	C8+2	C4+1	C4+1	C8+2	C5+1	C4+1	C9+2
	JAMB	16	12	13	17	12	13	18	13	14	19	14	15
	P-HOOK	5	5	8	5	5	9	6	6	9	6	6	10
DESIGN PRESS.		+120/-187.4			+120/-187.4			+120/-178.4			+120/-168.2		
30" (26)	H&S	C5+1	C4+1	C9+2	C5+1	C4+1	C9+2	C5+1	C4+1	C9+2	C5+1	C4+1	C9+2
	JAMB	19	13	14	20	14	15	20	14	15	20	14	15
	P-HOOK	6	5	9	6	5	10	6	6	10	6	6	10
DESIGN PRESS.		+120/-162.2			+120/-162.2			+120/-153.3			+120/-144.3		
36" (30)	H&S	C5+1	C4+1	C9+2	C5+1	C4+1	C10+2	C5+1	C4+1	C10+2	C5+1	C4+1	C10+2
	JAMB	19	14	15	21	15	16	21	15	16	21	15	16
	P-HOOK	6	5	10	6	5	10	6	6	10	6	6	10
DESIGN PRESS.		+120/-144.6			+120/-144.6			+120/-135.7			+116.4/-127.4		
42" (36)	H&S	C4+2	C4+1	C8+3	C4+2	C4+1	C9+3	C4+2	C4+1	C9+3	C5+1	C4+1	C10+2
	JAMB	20	14	15	21	15	16	21	15	16	21	15	16
	P-HOOK	6	5	10	6	5	11	6	6	11	6	6	11
DESIGN PRESS.		+105/-115			+105/-115			+105/-115			+105/-115		
48" (40)	H&S	C4+2	C4+1	C7+3	C4+2	C4+1	C8+3	C4+2	C4+1	C9+3	C4+2	C4+1	C9+3
	JAMB	18	13	14	20	14	15	21	15	16	22	16	17
	P-HOOK	6	5	9	6	5	10	6	6	10	7	6	11

PANELS OVER 48" WIDE NOT AVAILABLE OVER 96" HIGH

TABLE 4A.
SILL HT. VS POS. DP

SILL HEIGHT	POS. DESIGN PRESSURE
1 5/8"	N/A
2 3/4"	+50.0 PSF
3 1/2"	+73.3 PSF
4 1/2"	+100.0 PSF
5 1/4"	+120.0 PSF
SEE NOTES 1-3	

PRODUCT REVISED
as complying with the Florida Building Code
Acceptance No 11-1018.1
Expiration Date 03/18/2014
By
Miami Dade Product Control

NOTES:
1. POSITIVE PRESSURES IN TABLES ARE BASED ON THE USE OF THE 5 1/4" SILL.
2. WHEN USING THE 2 3/4" SILL, POSITIVE DP IS 50.0 PSF MAX., WITH THE 3 1/2" SILL, POSITIVE DP IS 73.3 PSF MAX AND WITH THE 4 1/2" SILL, POSITIVE DP IS 100.0 PSF MAX (NEGATIVE PRESSURES UNCHANGED). SEE TABLE 4A.
3. 2 3/4", 3 1/2", 4 1/2" AND 5 1/4" SILL HEIGHTS ARE TESTED FOR WATER INFILTRATION WHEREAS THE 1 5/8" SILL IS NOT AND MUST ONLY BE USED WHERE WATER RESISTANCE IS NOT REQUIRED. POSITIVE DESIGN PRESSURES SHOWN IN TABLE 4 MAY BE USED WHEN THE DOOR IS PROTECTED BY AN OVERHANG COMPLYING WITH THE FLORIDA BUILDING CODE (SEE ADJACENT DIAGRAM); THIS CONDITION IS NOT RATED FOR WATER INFILTRATION.
4. ANCHOR TYPES: 1. 1/4" ELCO ULTRACON (FORMERLY TAPCON) 2. 1/4" ELCO SS4 CRETE-FLEX 3. #12 STEEL SCREW (G5)
5. SEE SHEETS 7 THROUGH 10 FOR ANCHORAGE SPACING AND EMBEDMENT INFORMATION.

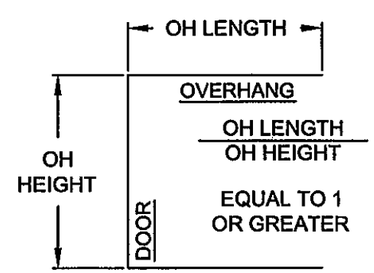

SEE NOTE 3

ANTHONY LYNN MILLER
LICENSE
No. 58705
STATE OF FLORIDA
PROFESSIONAL ENGINEER
10/14/11
A. LYNN MILLER, P.E.
P.E.# 58705

Revsd By:	Date:	Revisions:	
Revsd By:	Date:	Revisions:	
Revsd By: J.J.	Date: 10/13/11	Revisions: A	NO CHANGE THIS SHEET
Drawn By: F.K.	Date: 8/22/07	Checked By:	Date:

1070 TECHNOLOGY DRIVE
NOKOMIS, FL 34275
P.O. BOX 1529
NOKOMIS, FL 34274

PGT Visibly Better

Description: DP AND ANCHORAGE, TABLE 4
Title: ALUM. SLIDING GLASS DOOR, NON-IMPACT

Series/Model:	Scale:	Sheet:	Drawing No.	Rev:
SGD680	NTS	6 of 20	8100-12	A

HVHZ ANCHORAGE REQUIREMENTS NOTES:

1. APPROVED ANCHOR TYPES: 1) 1/4" ELCO ULTRACON (FORMERLY TAPCON) 2) 1/4" ELCO SS4 CRETE-FLEX 3) #12 STEEL SCREW (G5)
2. ANCHOR LOCATION SPACING FOR ANCHOR QUANTITIES SPECIFIED IN TABLES 1-4, SHTS. 3-6:

HEAD & SILL..... 6" MAX. FROM FRAME CORNERS. USE SPECIFIED CLUSTER FROM APPROPRIATE TABLES, SHTS. 3-6 AT EACH INTERLOCK AND STRAIGHT AND CORNER ASTRAGAL LOCATION, PLUS SPECIFIED QUANTITY OF ADDITIONAL ANCHORS PER PANEL (THE 6" FROM CORNER ANCHORS CAN BE INCLUDED). ADDITIONAL ANCHORS 24" MAX. ON CENTER. SEE EXAMPLE ANCHORAGE PLANS BELOW AND EXAMPLE CLUSTERS ON SHT. 8.

JAMBS & P-HOOKS... 7 11/16" MAX. FROM BOTTOM AND 24 1/2" MAX. O.C. UTILIZING ANCHOR QUANTITIES FROM APPROPRIATE TABLES, SHTS. 3-6. SEE P-HOOK ANCHOR DETAILS ON SHEET 10.

"ANCHORS PER PANEL" ARE THOSE AT THE HEAD AND SILL BETWEEN CLUSTERS OR THOSE BETWEEN A CLUSTER AND A FRAME JAMB OR P-HOOK.

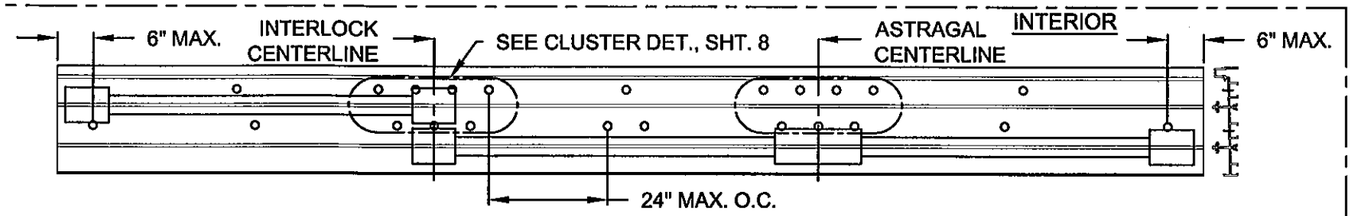

EXAMPLE OXX ANCHORAGE PLAN: C7+3 HEAD & SILL ANCHORAGE (3 PANEL, 2-TRACK EXAMPLE SHOWN) = (23) ANCHORS TOTAL

(3) PANEL, 48" x 96" DOOR FROM TABLE 2, SHT. 4, #12 WOOD SCREWS IN WOOD SUBSTRATE

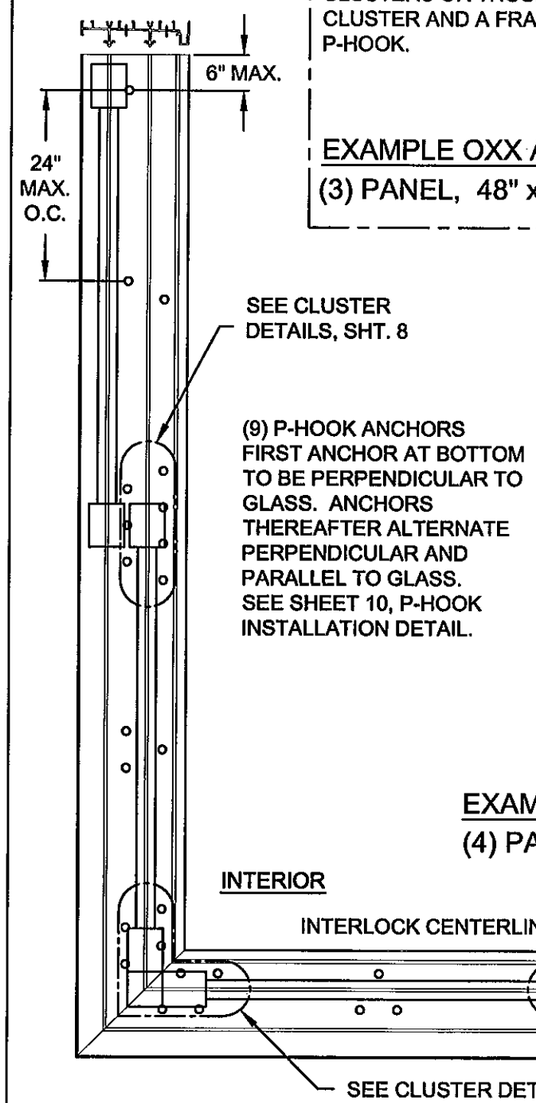

C7+3 & CORNERS = (33) ANCHORS TOTAL AT HEAD AND AT SILL

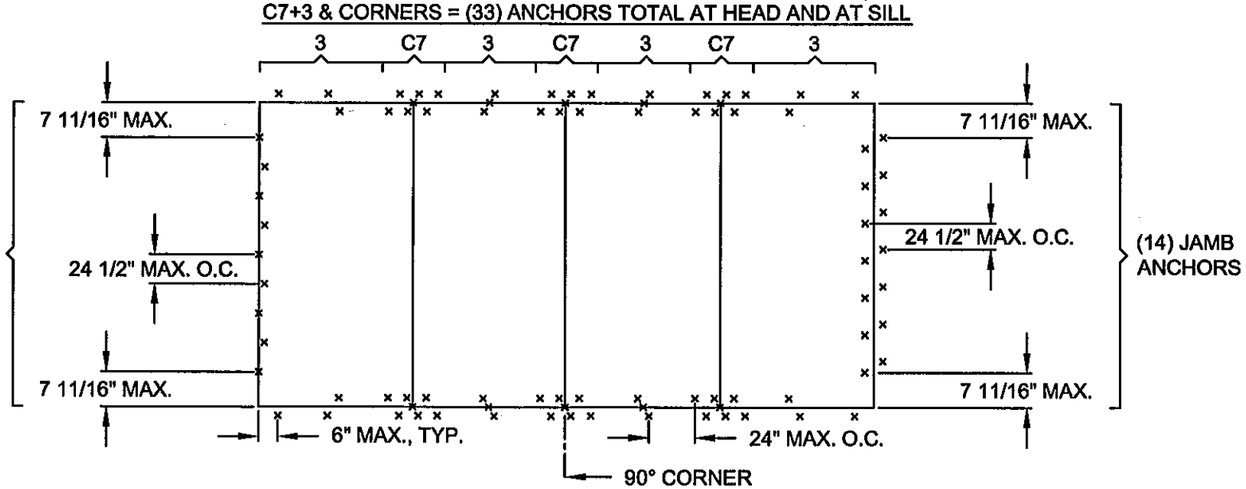

EXAMPLE OX-XO CORNER ANCHORAGE PLAN:

(4) PANEL, 48" x 96" DOOR FROM TABLE 2, SHT. 4, #12 WOOD SCREWS IN WOOD SUBSTRATE

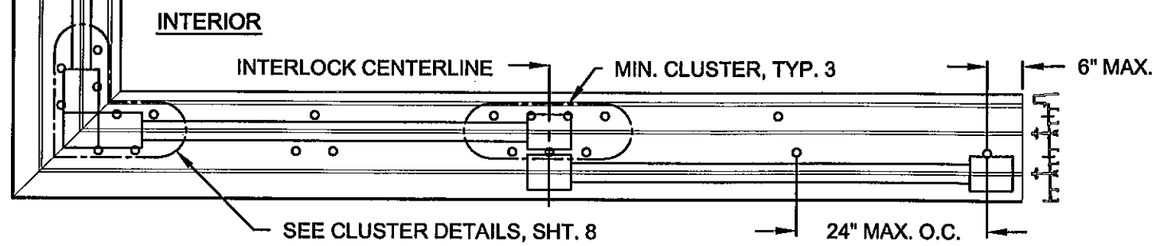

PRODUCT REVISED
as complying with the Florida Building Code
Acceptance No 11-1018.13
Expiration Date 03/18/2014
By
Miami Dade Product Control

ANTHONY LYNN MILLER
LICENSE
No. 58705
STATE OF FLORIDA
PROFESSIONAL ENGINEER
10/14/11

A. LYNN MILLER, P.E.
P.E.# 58705

Revsd By:	Date:	Revisions:	
Revsd By:	Date:	Revisions:	
Revsd By: J.J.	Date: 10/13/11	Revisions: A	NO CHANGE THIS SHEET
Drawn By: F.K.	Date: 8/22/07	Checked By: J.J.	Date: XX/XX/07

1070 TECHNOLOGY DRIVE
NOKOMIS, FL 34275
P.O. BOX 1529
NOKOMIS, FL 34274

PGT Visibly Better

Description: ANCHORAGE SPACING & EXAMPLE CLUSTERS

Title: ALUM. SLIDING GLASS DOOR, NON-IMPACT

Series/Model:	Scale:	Sheet:	Drawing No.	Rev:
SGD680	NTS	7 of 20	8100-12	A

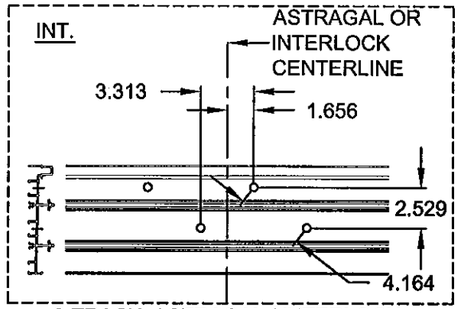

2-TRACK, ASTRAGAL / INTERLOCK
4 ANCHOR CLUSTER

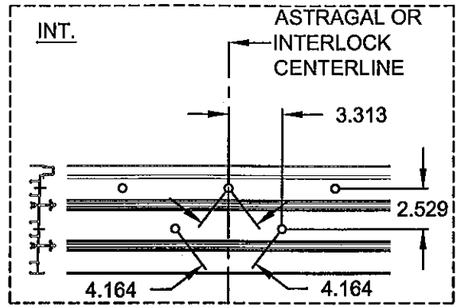

2-TRACK, ASTRAGAL / INTERLOCK
5 ANCHOR CLUSTER

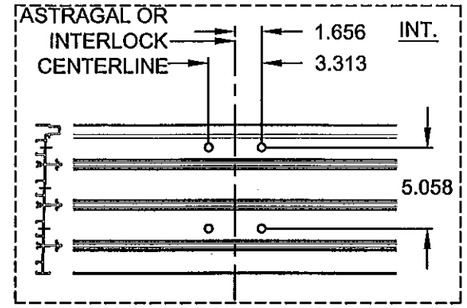

3-TRACK, ASTRAGAL / INTERLOCK
4 ANCHOR CLUSTER

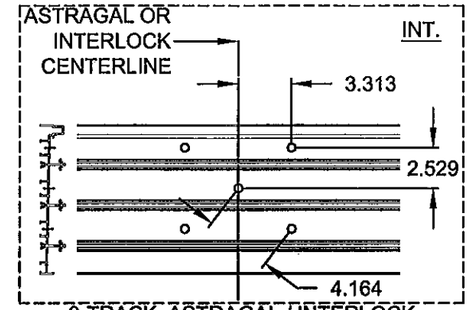

3-TRACK, ASTRAGAL / INTERLOCK
5 ANCHOR CLUSTER

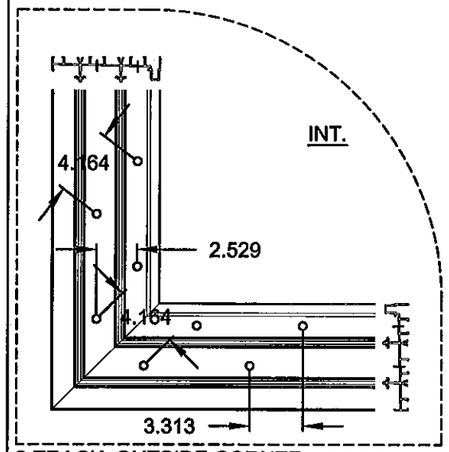

2-TRACK, OUTSIDE CORNER
8 ANCHOR CLUSTER

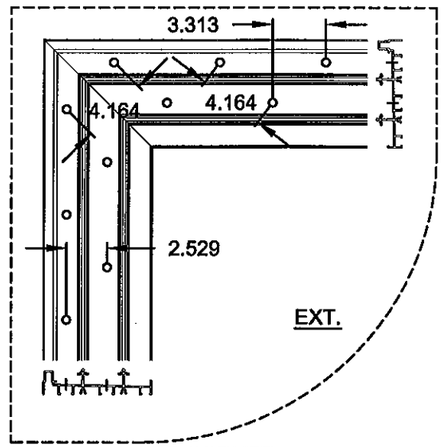

2-TRACK, INSIDE CORNER
8 ANCHOR CLUSTER

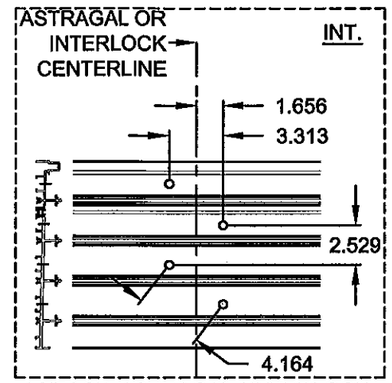

4-TRACK, ASTRAGAL / INTERLOCK
4 ANCHOR CLUSTER

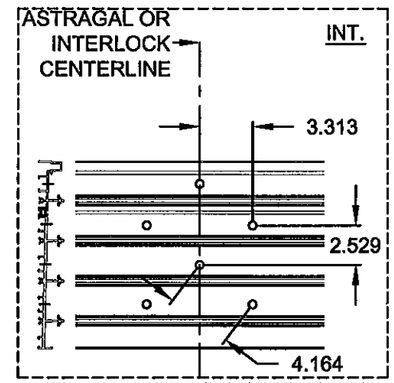

4-TRACK, ASTRAGAL / INTERLOCK
6 ANCHOR CLUSTER

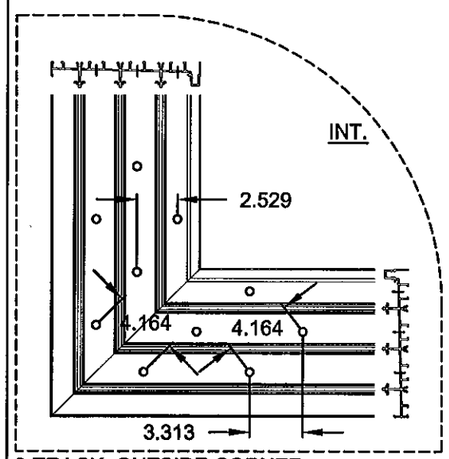

3-TRACK, OUTSIDE CORNER
10 ANCHOR CLUSTER

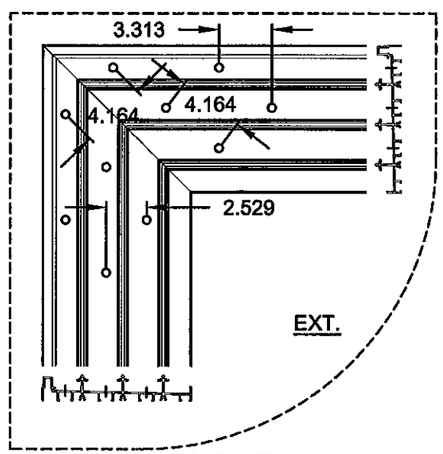

3-TRACK, INSIDE CORNER
10 ANCHOR CLUSTER

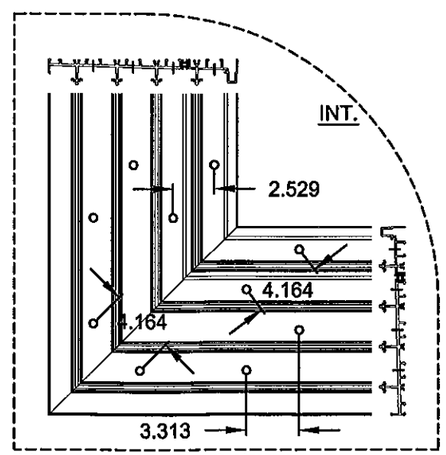

4-TRACK, OUTSIDE CORNER
10 ANCHOR CLUSTER

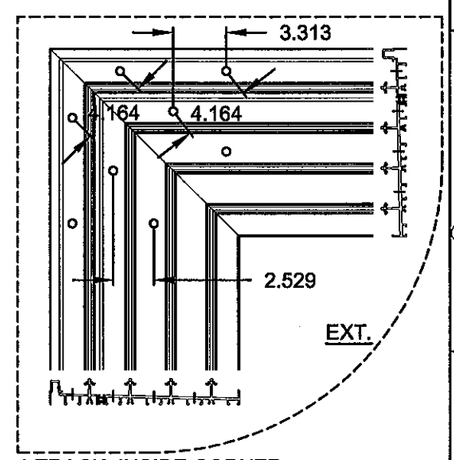

4-TRACK, INSIDE CORNER
8 ANCHOR CLUSTER

PRODUCT REVISED
as complying with the Florida
Building Code
Acceptance No 11-1018.13
Expiration Date 03/18/2014
By
Miami Dade Product Control

ANTHONY LYNN MILLER
LICENSE
No. 58705
10/14/11
STATE OF
FLORIDA
PROFESSIONAL ENGINEER

A. LYNN MILLER, P.E.
P.E.# 58705

Revsd By:	Date:	Revisions:	
Revsd By:	Date:	Revisions:	
Revsd By: J.J.	Date: 10/13/11	Revisions: A	NO CHANGE THIS SHEET
Drawn By: F.K.	Date: 8/22/07	Checked By: J.J.	Date: XX/XX/07

1070 TECHNOLOGY DRIVE
NOKOMIS, FL 34275

P.O. BOX 1529
NOKOMIS, FL 34274

PGT
Visibly Better

Description: ANCHORAGE, EXAMPLE CLUSTERS

Title: ALUM. SLIDING GLASS DOOR, NON-IMPACT

Series/Model:	Scale:	Sheet:	Drawing No.	Rev:
SGD680	NTS	8 of 20	8100-12	A

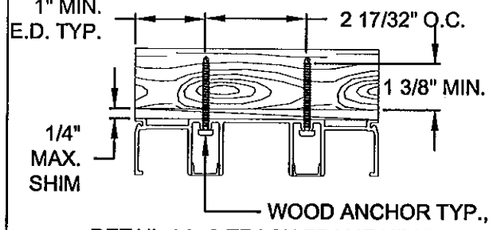

DETAIL AA, 2-TRACK FRAME HEAD
WOOD INSTALLATION

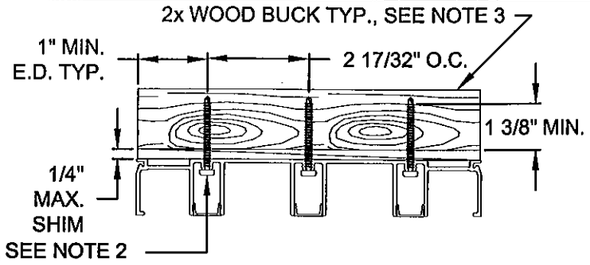

DETAIL AB, 3-TRACK FRAME HEAD
WOOD INSTALLATION

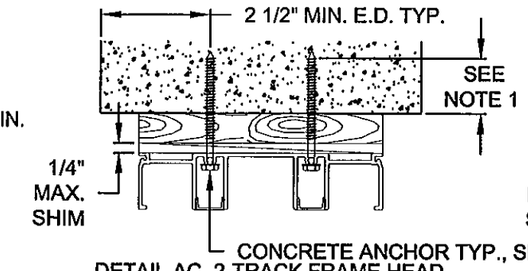

DETAIL AC, 2-TRACK FRAME HEAD
CONCRETE INSTALLATION

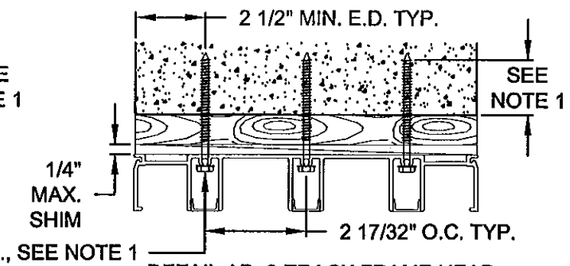

DETAIL AD, 3-TRACK FRAME HEAD
CONCRETE INSTALLATION

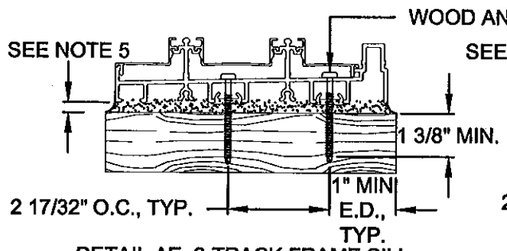

DETAIL AE, 2-TRACK FRAME SILL
WOOD INSTALLATION

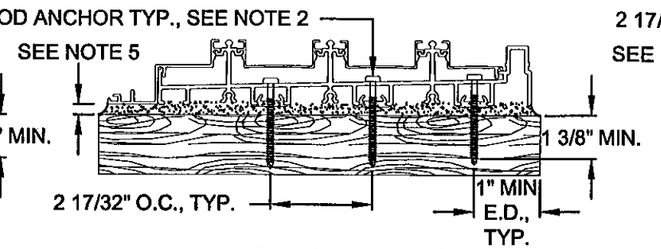

DETAIL AF, 3-TRACK FRAME SILL
WOOD INSTALLATION

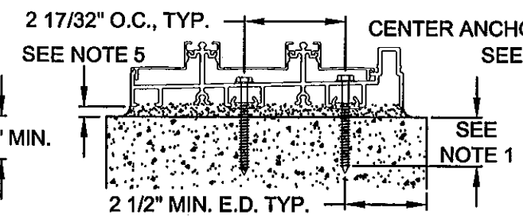

DETAIL AG, 2-TRACK FRAME SILL
CONCRETE INSTALLATION

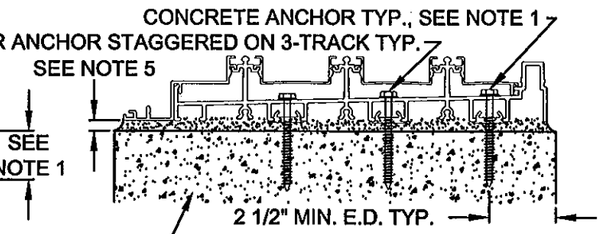

DETAIL AH, 3-TRACK FRAME SILL
CONCRETE INSTALLATION

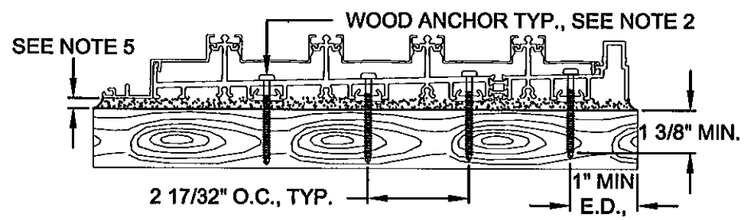

DETAIL AJ, 4-TRACK FRAME SILL
WOOD INSTALLATION

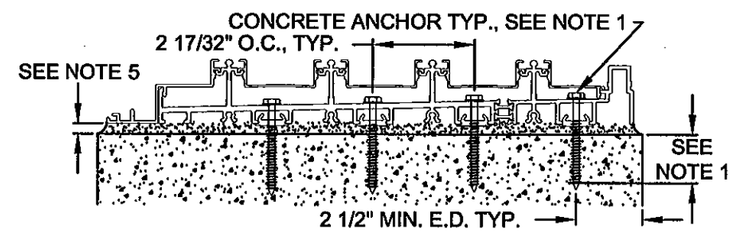

DETAIL AK, 4-TRACK FRAME SILL
CONCRETE INSTALLATION

NOTES PERTAINING TO ANCHORAGE DETAILS ON SHTS. 7-8:

1. FOR CONCRETE APPLICATIONS IN MIAMI-DADE COUNTY, USE ONLY MIAMI-DADE COUNTY APPROVED ELCO 1/4" ULTRACON (FORMERLY TAPCON) - MIN. 1 3/8" EMBED. OR 1/4" ELCO SS4 CRETE-FLEX - 1 3/4" MIN. EMBED.
2. FOR WOOD APPLICATIONS USE #12 STEEL SCREWS (G5). 1/4" ELCO SS4 CRETE-FLEX MAY BE USED INSTEAD OF #12 SCREWS.
3. WOOD BUCKS DEPICTED AS 1x ARE LESS THAN 1 1/2" THICK. 1x WOOD BUCKS ARE OPTIONAL IF UNIT IS INSTALLED DIRECTLY TO SOLID CONCRETE. WOOD BUCKS DEPICTED AS 2x ARE 1 1/2" THICK OR GREATER. INSTALLATION TO THE SUBSTRATE OF WOOD BUCKS TO BE ENGINEERED BY OTHERS OR AS APPROVED BY THE AUTHORITY HAVING JURISDICTION (AHJ).
4. FOR ATTACHMENT TO ALUMINUM: THE ALUMINUM SHALL BE A MINIMUM STRENGTH OF 6063-T5 AND A MINIMUM OF 1/8" THICK. THE ALUMINUM STRUCTURAL MEMBER SHALL BE OF A SIZE TO PROVIDE FULL SUPPORT TO THE DOOR FRAME SIMILAR TO THAT SHOWN IN THE DETAILS USING 2x WOOD BUCKS. THE ANCHORS SHALL BE #12 SHEET METAL SCREWS WITH FULL THREAD ENGAGEMENT INTO THE ALUMINUM. IF THESE CRITERIA ARE MET, THE FULL DESIGN PRESSURES USING ANCHORAGE REQUIREMENTS SHOWN IN TABLES 1-4, SHTS. 3-6 FOR ANCHOR TYPE 3 ARE ACCEPTABLE.
5. IF SILL IS TIGHT TO SUBSTRATE, GROUT OR OTHER MATERIAL IS NOT REQUIRED. IF USED, NON-SHRINK, NON-METALLIC GROUT, 3400 PSI MIN., (DONE BY OTHERS) MUST FULLY SUPPORT THE ENTIRE LENGTH OF THE SILL THAT IS NOT TIGHT TO THE SUBSTRATE, AND TRANSFER SHEAR LOAD TO SUBSTRATE. IF SUBSTRATE IS WOOD, 30# FELT PAPER OR MASTIC IS REQUIRED BETWEEN THE GROUT AND WOOD SUBSTRATE, OR AS APPROVED BY THE AUTHORITY HAVING JURISDICTION (AHJ).

PRODUCT REVISED
as complying with the Florida
Building Code
Acceptance No 11-1018.13
Expiration Date 03/18/2014
By
Miami Dade Product Control

ANTHONY LYNN MILLER
LICENSE
No. 58705
10/14/11
STATE OF
FLORIDA
PROFESSIONAL ENGINEER

A. LYNN MILLER, P.E.
P.E.# 58705

Revsd By:	Date:	Revisions:	
F.K.	4/5/05		
F.K.	4/12/06		
F.K.	10/13/11	A	NO CHANGE THIS SHEET
Drawn By: F.K.	Date: 8/22/07	Checked By: J.J.	Date: XX/XX/07

1070 TECHNOLOGY DRIVE
NOKOMIS, FL 34275

P.O. BOX 1529
NOKOMIS, FL 34274

PGT
Visibly Better

Description: ANCHORAGE DETAILS

Title: ALUM. SLIDING GLASS DOOR, NON-IMPACT

Series/Model:	Scale:	Sheet:	Drawing No.	Rev:
SGD680	NTS	9 of 20	8100-12	A

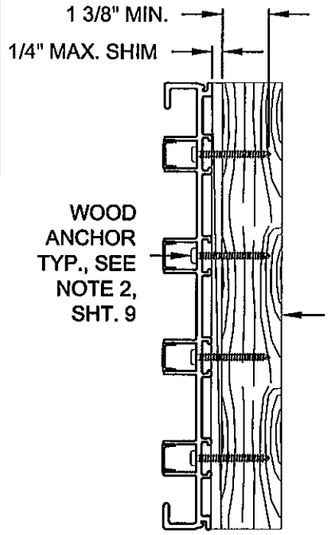

DETAIL AL, 4-TRACK FRAME JAMB
WOOD INSTALLATION

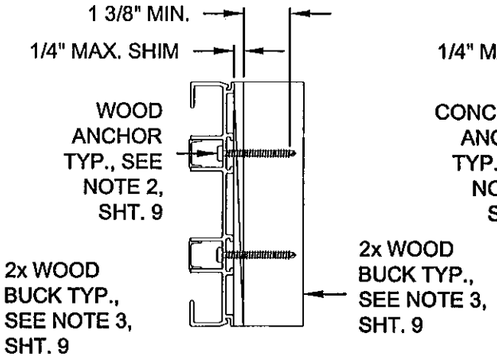

DETAIL AM, 2-TRACK FRAME JAMB
WOOD INSTALLATION

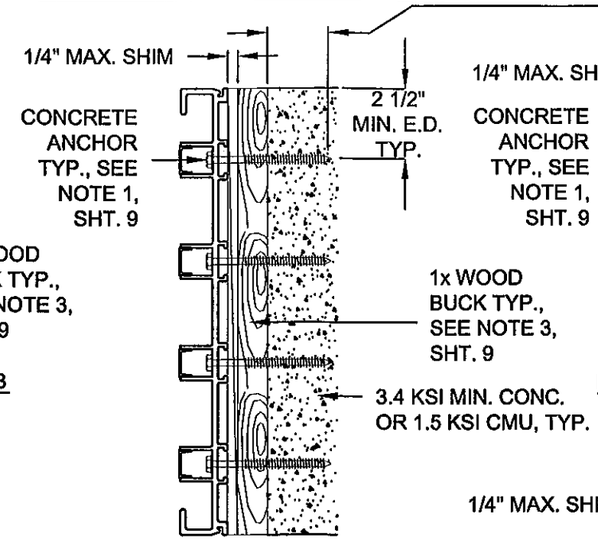

DETAIL AN, 4-TRACK FRAME JAMB
CONCRETE INSTALLATION

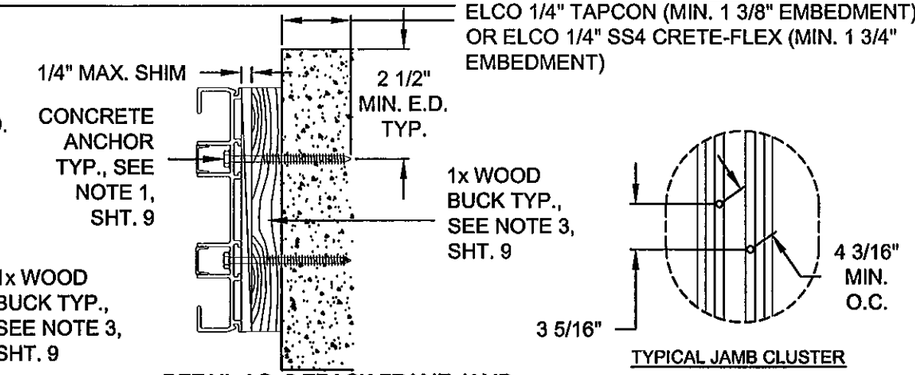

TYPICAL JAMB CLUSTER

DETAIL AO, 2-TRACK FRAME JAMB
CONCRETE INSTALLATION

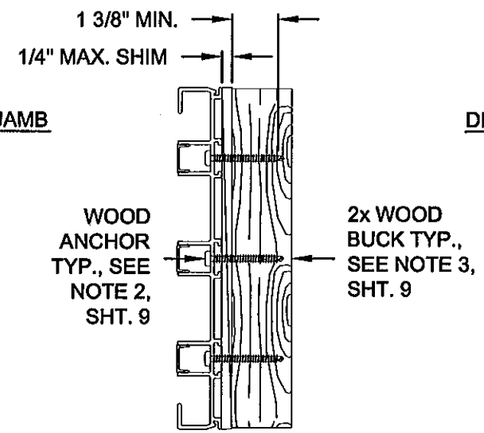

DETAIL AP, 3-TRACK FRAME JAMB
WOOD INSTALLATION

4 3/16" MIN. O.C. DIAGONAL STAGGERED SPACING, TYP. ALL JAMB DETAILS

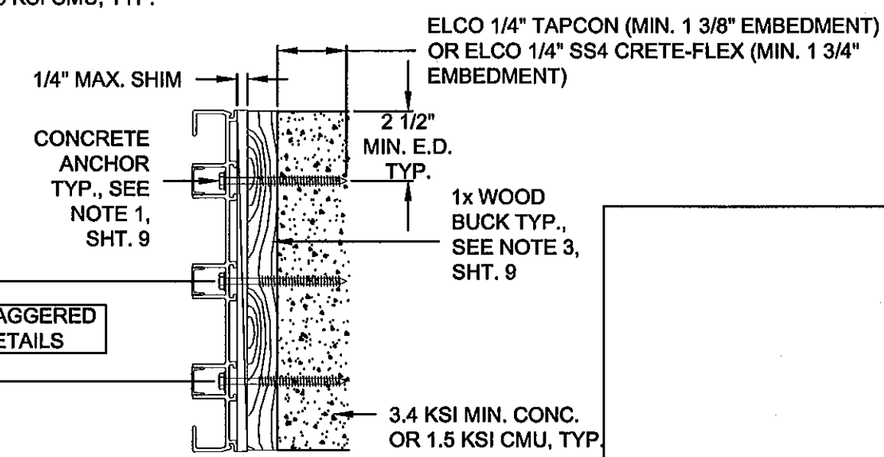

DETAIL AQ, 3-TRACK FRAME JAMB
CONCRETE INSTALLATION

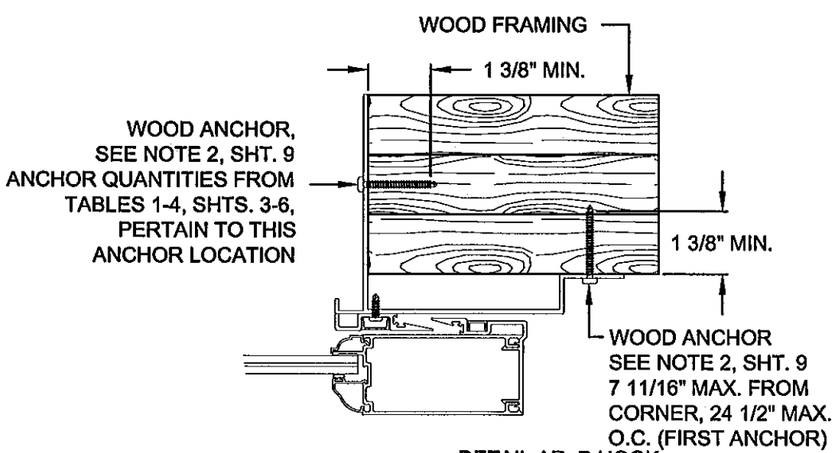

DETAIL AR, P-HOOK
WOOD INSTALLATION

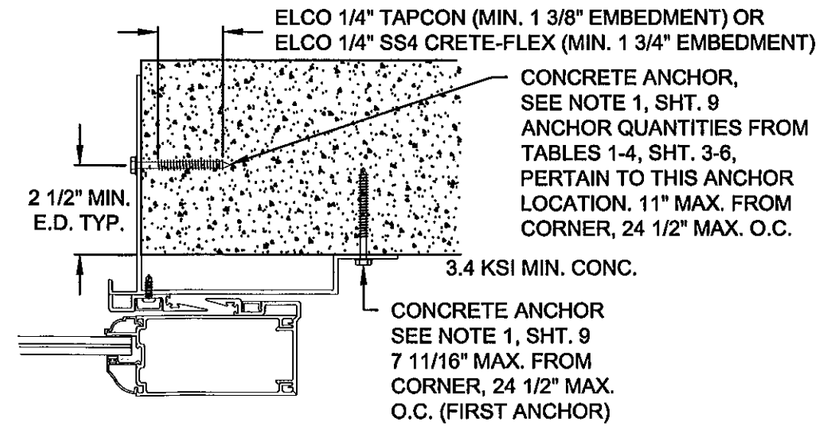

DETAIL AS, P-HOOK
CONCRETE INSTALLATION

PRODUCT REVISED
as complying with the Florida
Building Code
Acceptance No 11-1018.13
Expiration Date 03/18/2014
By
Miami Dade Product Control

ANTHONY LYNN MILLER
LICENSE
No. 58705
STATE OF FLORIDA
PROFESSIONAL ENGINEER
A. LYNN MILLER, P.E.
P.E.# 58705

Revsd By:	Date:	Revisions:	
Revsd By:	Date:	Revisions:	
Revsd By: J.J.	Date: 10/13/11	Revisions: A	NO CHANGE THIS SHEET
Drawn By: F.K.	Date: 8/22/07	Checked By: J.J.	Date: XX/XX/07

1070 TECHNOLOGY DRIVE
NOKOMIS, FL 34275

P.O. BOX 1529
NOKOMIS, FL 34274

PGT
Visibly Better

Description: ANCHORAGE DETAILS

Title: ALUM. SLIDING GLASS DOOR, NON-IMPACT

Series/Model:	Scale:	Sheet:	Drawing No.	Rev:
SGD680	NTS	10 of 20	8100-12	A

NOTES:

1. SEE SHEET 12 FOR INDIVIDUAL PANEL CONFIGURATIONS. MAX. NOMINAL PANEL WIDTH = 60".
2. SEE SHEETS 13 THROUGH 17 FOR SECTION DETAILS.
3. SEE SHEETS 3 THROUGH 10 FOR ANCHORAGE DETAILS.
4. REINFORCEMENT LOCATIONS: REINFORCEMENTS ARE REQUIRED IN THE EXTERIOR INTERLOCKS OF DOORS. SEE SECTION DETAIL C, SHEET 13

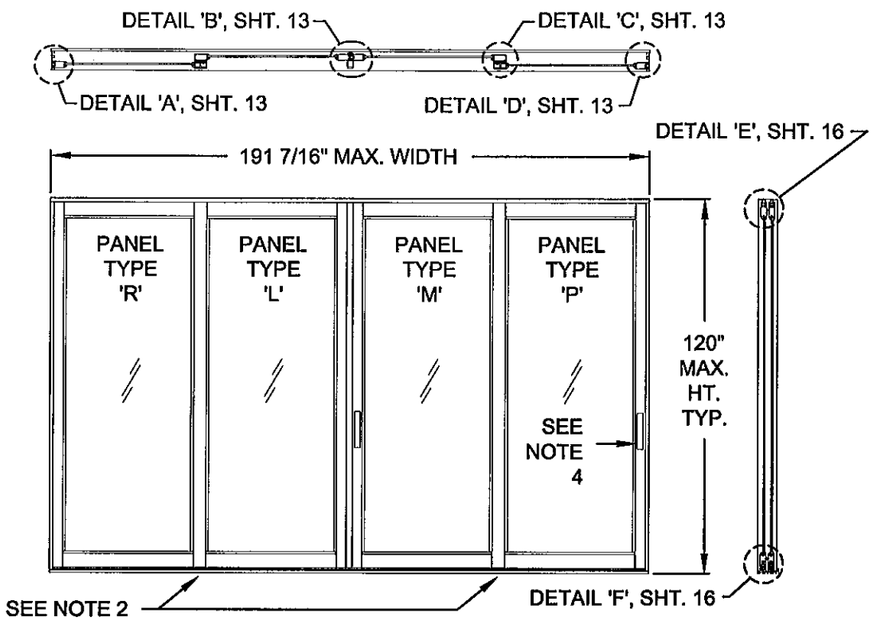

OXXX (2 TRACK)

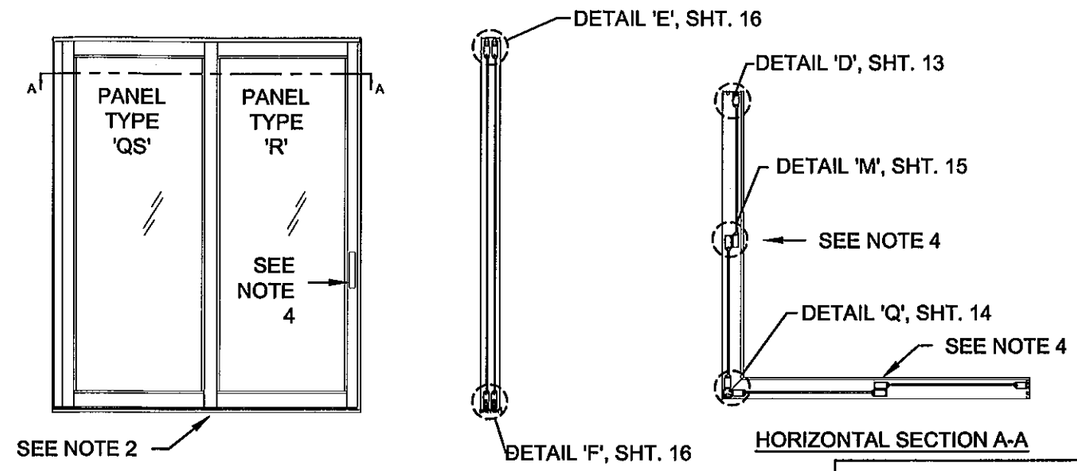

HORIZONTAL SECTION A-A

XX-XX (2 TRACK OUTSIDE CORNER)

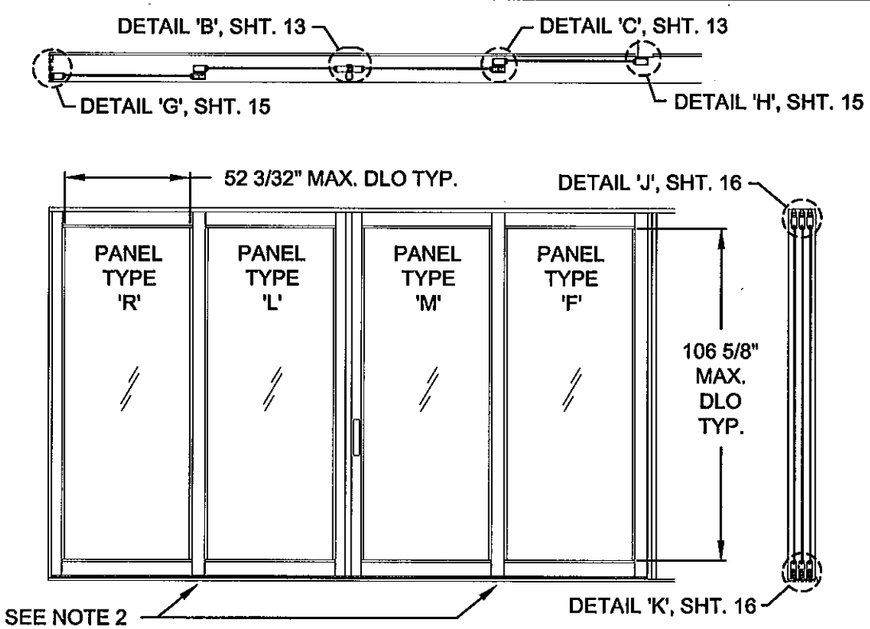

OXXXp (3 TRACK RIGHT POCKET)

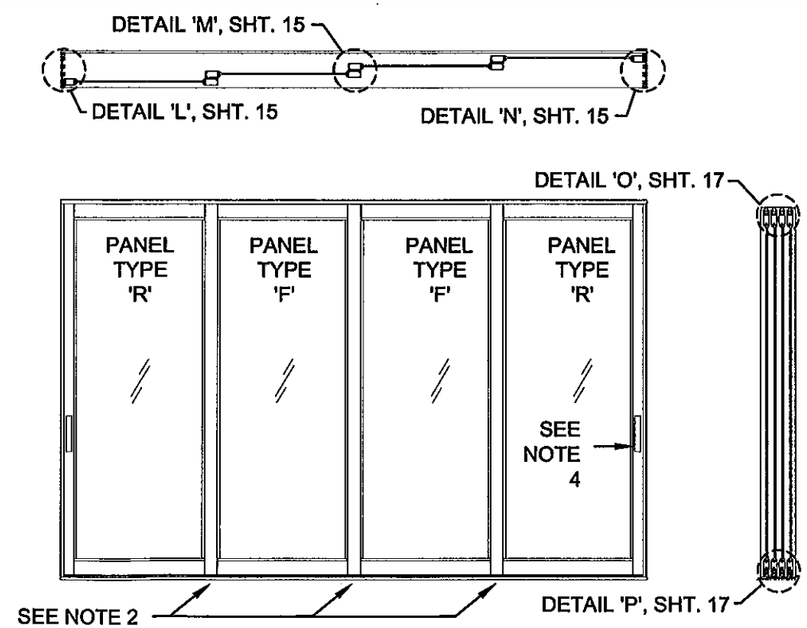

XXXX (4 TRACK BY-PASS)

PRODUCT REVISED
as complying with the Florida
Building Code
Acceptance No 11-1018.13
Expiration Date 03/18/2014
By
Miami Dade Product Control

ANTHONY LYNN MILLER
LICENSE
No. 58705
10/14/11
STATE OF FLORIDA
PROFESSIONAL ENGINEER

A. LYNN MILLER, P.E.
P.E.# 58705

Revsd By:	Date:	Revisions:	
Revsd By:	Date:	Revisions:	
Revsd By: J.J.	Date: 10/13/11	Revisions: A	NO CHANGE THIS SHEET
Drawn By: F.K.	Date: 8/22/07	Checked By: J.J.	Date: XX/XX/07

1070 TECHNOLOGY DRIVE
NOKOMIS, FL 34275

P.O. BOX 1529
NOKOMIS, FL 34274

PGT
Visibly Better

Description: EXAMPLE ELEVATIONS/CONFIGURATIONS

Title: ALUM. SLIDING GLASS DOOR, NON-IMPACT

Series/Model:	Scale:	Sheet:	Drawing No.	Rev:
SGD680	NTS	11 of 20	8100-12	A

PANEL LETTER			PANEL LETTER		
P	SINGLE INTERLOCK	FIXED LOCKSTILE	GR	DOUBLE INTERLOCK	LOCKSTILE
R	FIXED LOCKSTILE	SINGLE INTERLOCK	U (BOX OUT)	ASTRAGAL OUT	LOCKSTILE
T (BOX OUT)	ASTRAGAL OUT	FIXED LOCKSTILE	U (BOX IN)	ASTRAGAL IN	LOCKSTILE
T (BOX IN)	ASTRAGAL IN	FIXED LOCKSTILE	A	SINGLE INTERLOCK	LOCKSTILE
S (BOX OUT)	FIXED LOCKSTILE	ASTRAGAL OUT	D	LOCKSTILE	SINGLE INTERLOCK
S (BOX IN)	FIXED LOCKSTILE	ASTRAGAL IN	G	LOCKSTILE	DOUBLE INTERLOCK
Y	FIXED LOCKSTILE	DOUBLE INTERLOCK	J (BOX OUT)	LOCKSTILE	ASTRAGAL OUT
YR	DOUBLE INTERLOCK	FIXED LOCKSTILE	J (BOX IN)	LOCKSTILE	ASTRAGAL IN
W (BOX IN)	DOUBLE INTERLOCK	ASTRAGAL IN	M	LOCKSTILE	SINGLE INTERLOCK
WR (BOX OUT)	ASTRAGAL OUT	DOUBLE INTERLOCK	CS	ASTRAGAL RECEIVER	SINGLE INTERLOCK
L (BOX OUT)	SINGLE INTERLOCK	ASTRAGAL OUT	SC	SINGLE INTERLOCK	ASTRAGAL RECEIVER
LR (BOX OUT)	ASTRAGAL OUT	SINGLE INTERLOCK	QS	CORNER LOCKSTILE	SINGLE INTERLOCK
N (BOX IN)	ASTRAGAL IN	SINGLE INTERLOCK	SQ	SINGLE INTERLOCK	CORNER LOCKSTILE
C (BOX IN)	SINGLE INTERLOCK	ASTRAGAL IN	AS	ASTRAGAL RECEIVER	SINGLE INTERLOCK
B	SINGLE INTERLOCK	SINGLE INTERLOCK	SA	SINGLE INTERLOCK	ASTRAGAL RECEIVER
F	SINGLE INTERLOCK	SINGLE INTERLOCK	CI	CORNER LOCKSTILE	SINGLE INTERLOCK
E	SINGLE INTERLOCK	SINGLE INTERLOCK	IC	SINGLE INTERLOCK	CORNER LOCKSTILE
I	DOUBLE INTERLOCK	DOUBLE INTERLOCK	CF	ASTRAGAL RECEIVER	FIXED LOCKSTILE
K	SINGLE INTERLOCK	LOCKSTILE	FC	FIXED LOCKSTILE	ASTRAGAL RECEIVER

NOTE:

1. MAXIMUM NOMINAL PANEL WIDTH FOR ALL PANEL CONFIGURATIONS EQUALS 60"

INTERIOR
(ALL PANEL TYPES)
EXTERIOR

PRODUCT REVISED
as complying with the Florida Building Code
Acceptance No 11-1018.13
Expiration Date 03/18/2014
By
Miami Dade Product Control

ANTHONY LYNN MILLER
LICENSE
No. 58705
10/14/11
STATE OF FLORIDA
PROFESSIONAL ENGINEER
A. LYNN MILLER, P.E.
P.E.# 58705

Revsd By:	Date:	Revisions:	
Revsd By:	Date:	Revisions:	
Revsd By: J.J.	Date: 10/13/11	Revisions: A	NO CHANGE THIS SHEET
Drawn By: F.K.	Date: 8/22/07	Checked By: J.J.	Date: XX/XX/07

1070 TECHNOLOGY DRIVE
NOKOMIS, FL 34275

P.O. BOX 1529
NOKOMIS, FL 34274

PGT
Visibly Better

Description: PANEL TYPES

Title: ALUM. SLIDING GLASS DOOR, NON-IMPACT

Series/Model:	Scale:	Sheet:	Drawing No.	Rev:
SGD680	FULL	12 of 20	8100-12	A

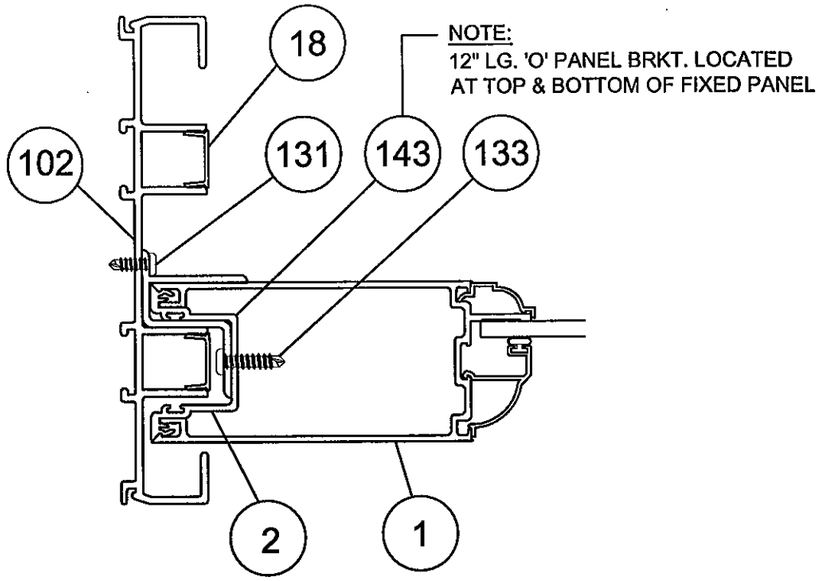

NOTE:
12" LG. 'O' PANEL BRKT. LOCATED AT TOP & BOTTOM OF FIXED PANEL

DETAIL 'A'

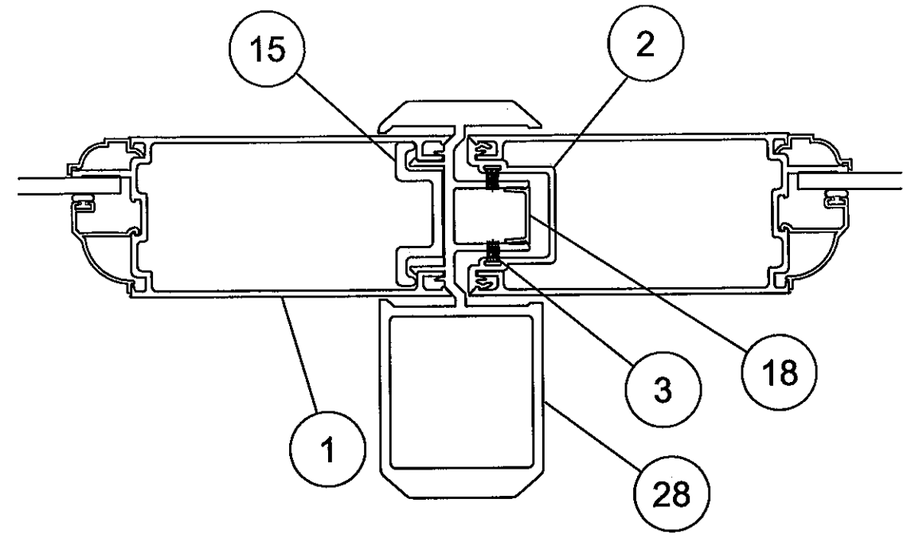

DETAIL 'B'

INTERIOR
(ALL HORIZ. SECTIONS)
EXTERIOR

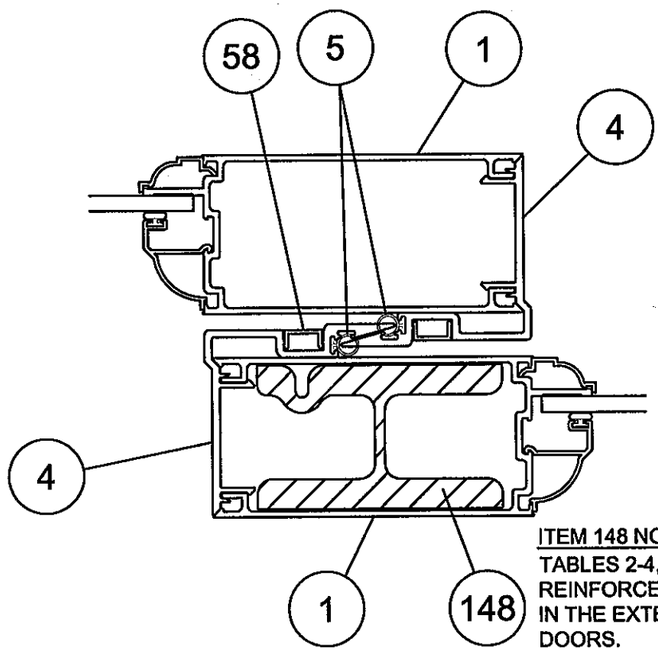

ITEM 148 NOTE:
TABLES 2-4, SHTS. 4-6
REINFORCEMENT REQUIRED ONLY IN THE EXTERIOR INTERLOCK OF DOORS.

DETAIL 'C' (REINFORCED)

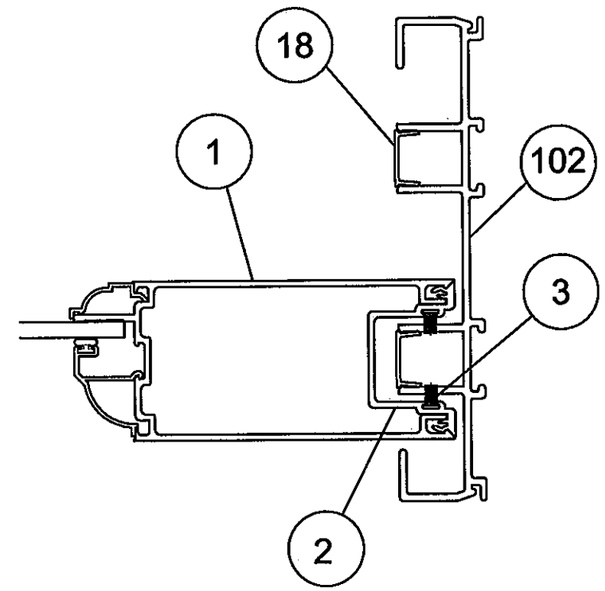

DETAIL 'D'

PRODUCT REVISED
as complying with the Florida Building Code
Acceptance No 11-1018.13
Expiration Date 03/18/2014
By
Miami Dade Product Control

ANTHONY LYNN MILLER
LICENSE
No. 58705
STATE OF FLORIDA
PROFESSIONAL ENGINEER
A. LYNN MILLER, P.E.
P.E.# 58705

Revsd By:	Date:	Revisions:	
Revsd By:	Date:	Revisions:	
Revsd By: J.J.	Date: 10/13/11	Revisions: A	NO CHANGE THIS SHEET
Drawn By: F.K.	Date: 8/22/07	Checked By: J.J.	Date: XX/XX/07

1070 TECHNOLOGY DRIVE
NOKOMIS, FL 34275

P.O. BOX 1529
NOKOMIS, FL 34274

PGT
Visibly Better

Description: HORIZONTAL SECTION DETAILS

Title: ALUM. SLIDING GLASS DOOR, NON-IMPACT

Series/Model:	Scale:	Sheet:	Drawing No.	Rev:
SGD680	1/2x	13 of 20	8100-12	A

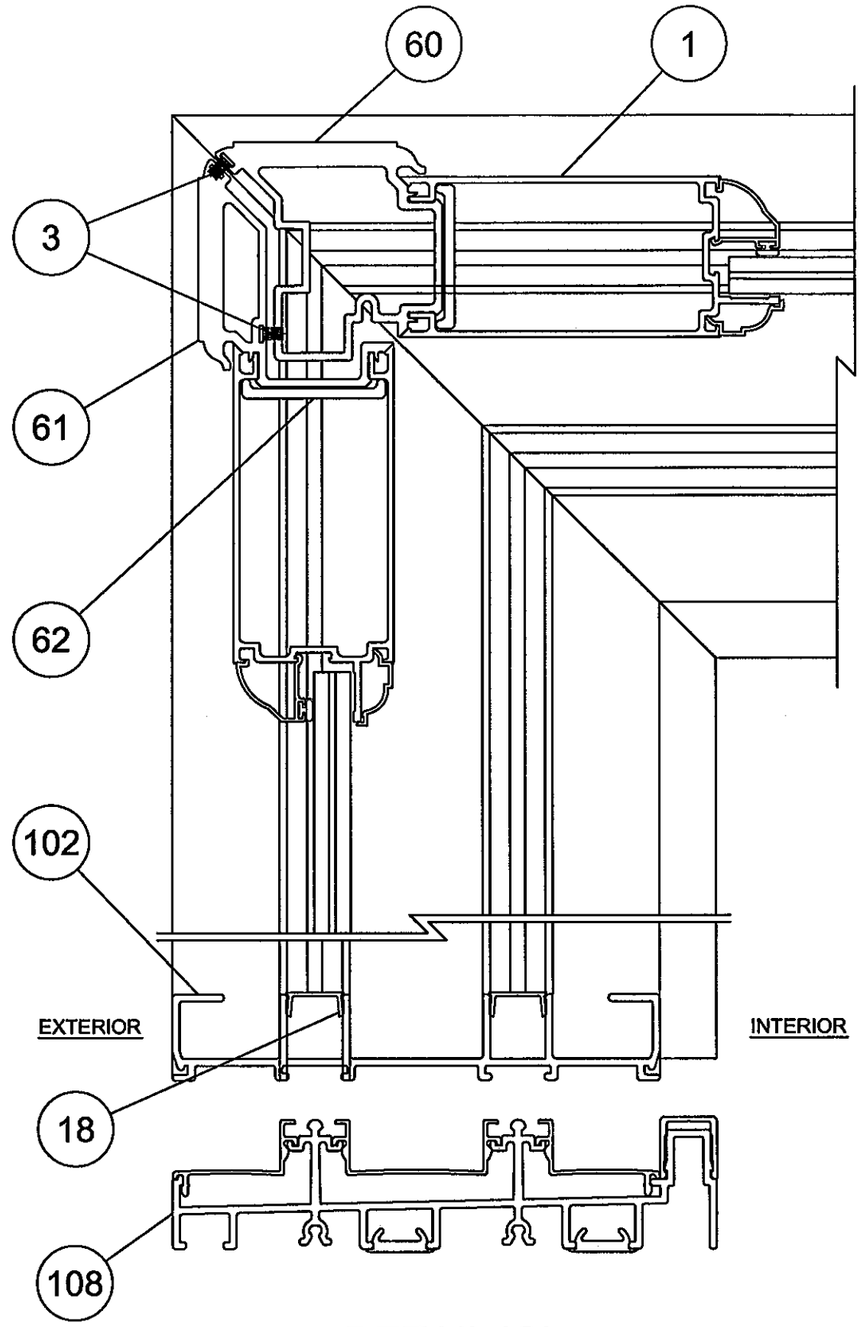

DETAIL 'Q'

(OUTSIDE CORNER, 2-TRACK SHOWN)

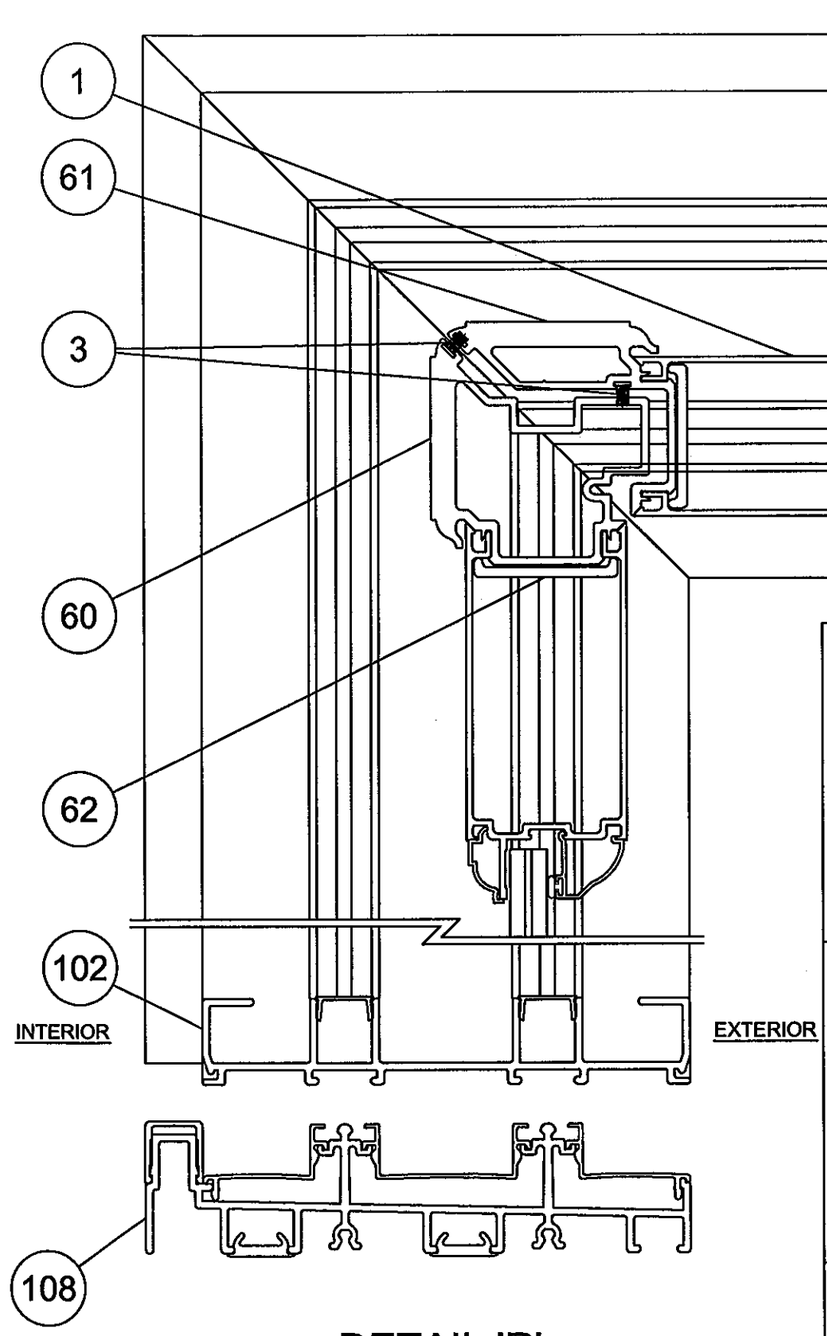

DETAIL 'R'

(INSIDE CORNER, 2 TRACK SHOWN)

PRODUCT REVISED
as complying with the Florida
Building Code
Acceptance No 11-1018.13
Expiration Date 03/18/2014
By
Miami Dade Product Control

ANTHONY LYNN MILLER
LICENSE
No. 58705
10/14/11
STATE OF FLORIDA
PROFESSIONAL ENGINEER
A. LYNN MILLER, P.E.
P.E.# 58705

Revsd By:	Date:	Revisions:	
Revsd By:	Date:	Revisions:	
Revsd By: J.J.	Date: 10/13/11	Revisions: A	NO CHANGE THIS SHEET
Drawn By: F.K.	Date: 8/22/07	Checked By:	Date:

1070 TECHNOLOGY DRIVE
NOKOMIS, FL 34275

P.O. BOX 1529
NOKOMIS, FL 34274

PGT
Visibly Better

Description: HORIZONTAL SECTION DETAILS, CORNERS

Title: ALUM. SLIDING GLASS DOOR, NON-IMPACT

Series/Model:	Scale:	Sheet:	Drawing No.	Rev:
SGD680	1/2x	14 of 20	8100-12	A

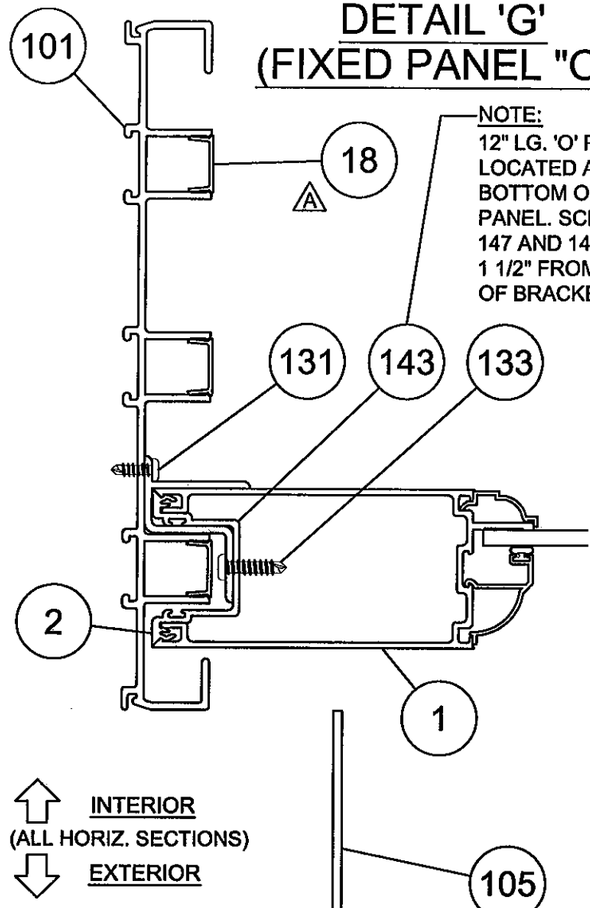

DETAIL 'G' (FIXED PANEL "O")

NOTE:
12" LG. 'O' PANEL BRKT. LOCATED AT TOP & BOTTOM OF FIXED PANEL. SCREW ITEMS 147 AND 149 LOCATED 1 1/2" FROM EACH END OF BRACKET

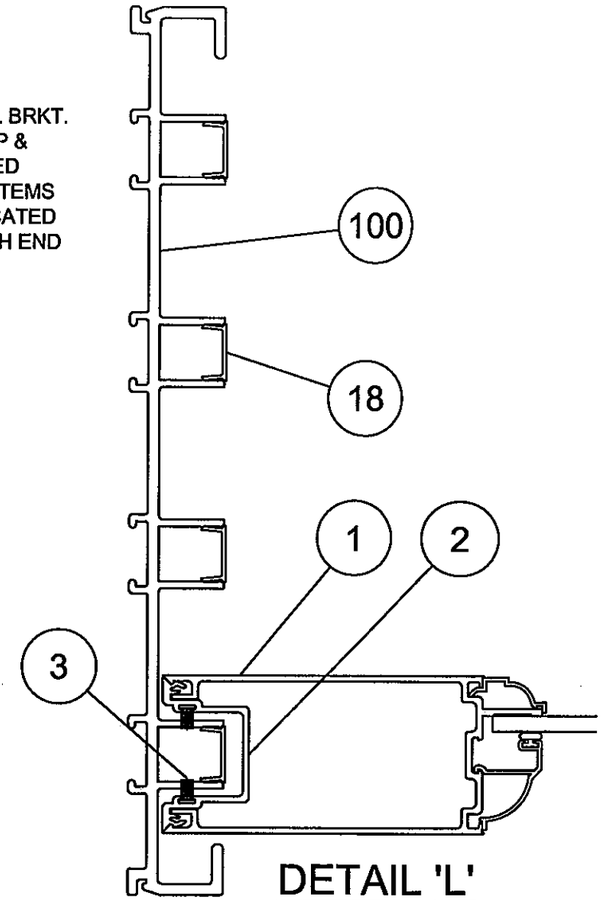

DETAIL 'L'

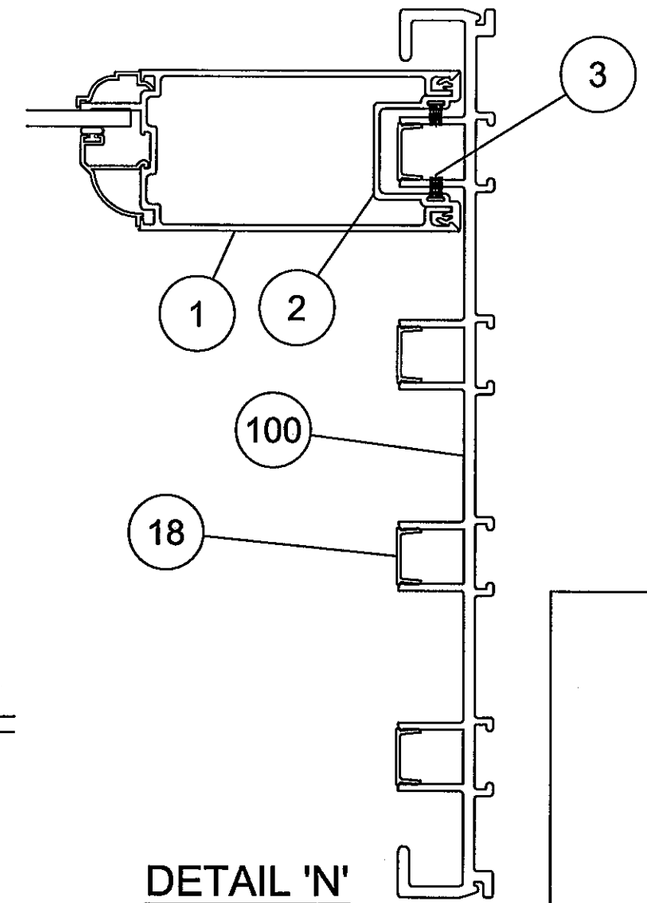

DETAIL 'N'

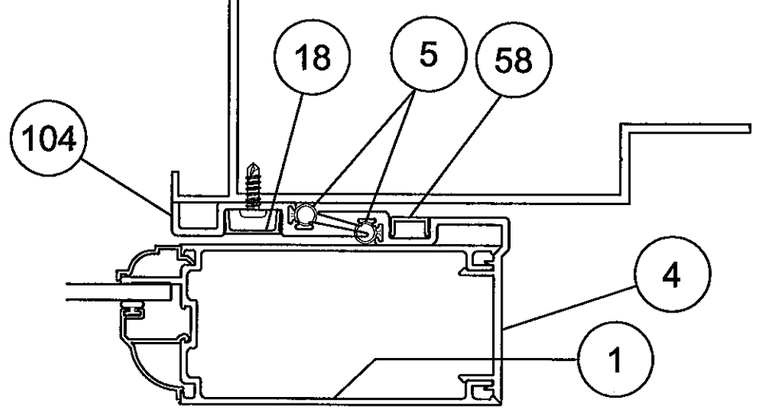

DETAIL 'H'

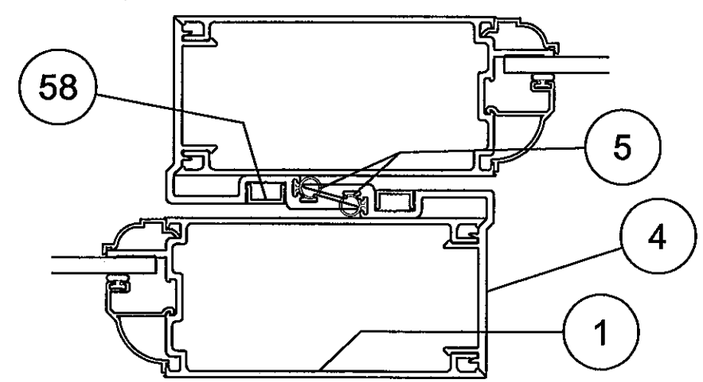

DETAIL 'M' (NOT REINFORCED)

PRODUCT REVISED
as complying with the Florida
Building Code
Acceptance No. 11-1018.13
Expiration Date 03/18/2014
By
Miami Dade Product Control

ANTHONY LYNN MILLER
LICENSE
No. 58705
10/14/11
STATE OF
FLORIDA
PROFESSIONAL ENGINEER
A. LYNN MILLER, P.E.
P.E.# 58705

Revsd By:	Date:	Revisions:	
Revsd By:	Date:	Revisions:	
Revsd By: J.J.	Date: 10/13/11	Revisions: A	NO CHANGE THIS SHEET
Drawn By: F.K.	Date: 8/22/07	Checked By: J.J.	Date: XX/XX/07

1070 TECHNOLOGY DRIVE
NOKOMIS, FL 34275

P.O. BOX 1529
NOKOMIS, FL 34274

PGT
Visibly Better

Description: HORIZONTAL SECTION DETAILS

Title: ALUM. SLIDING GLASS DOOR, NON-IMPACT

Series/Model:	Scale:	Sheet:	Drawing No.	Rev:
SGD680	1/2x	15 of 20	8100-12	A

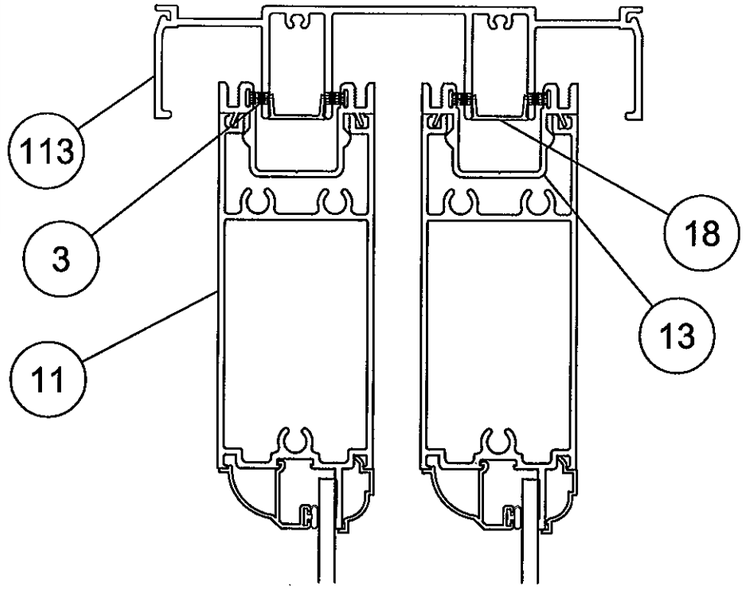

DETAIL 'E'

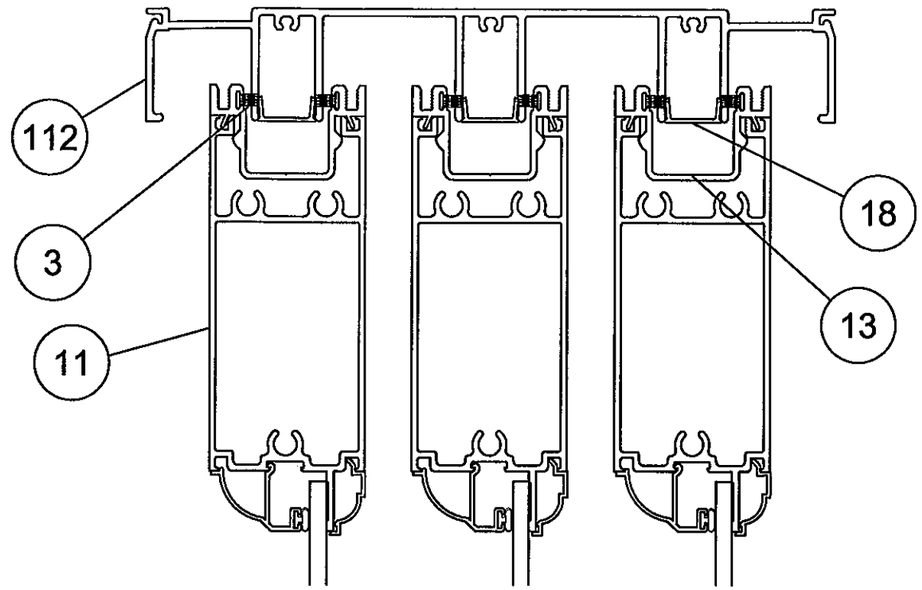

DETAIL 'J'

EXTERIOR INTERIOR
(ALL VERT. SECTIONS)

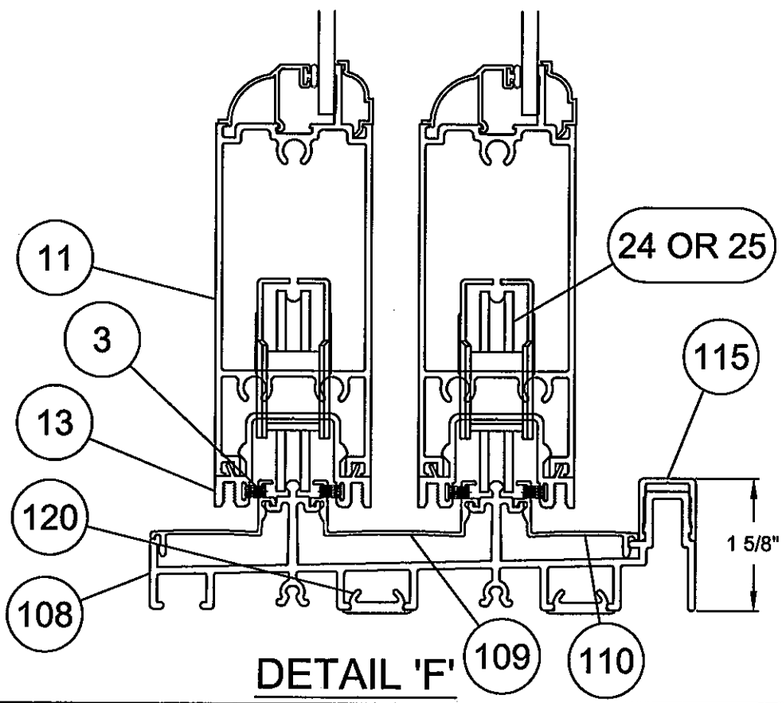

DETAIL 'F'

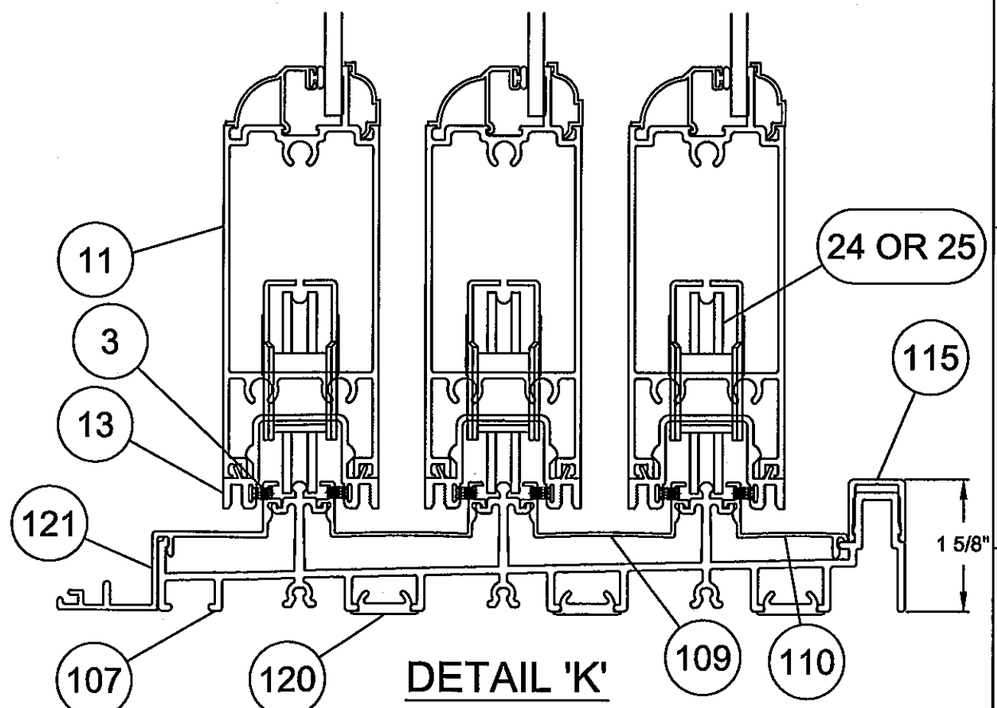

DETAIL 'K'

PRODUCT REVISED
as complying with the Florida
Building Code
Acceptance No 11-1018.13
Expiration Date 02/18/2014
By
Miami Dade Product Control

ANTHONY LYNN MILLER
LICENSE
No. 58705
10/14/11
STATE OF FLORIDA
PROFESSIONAL ENGINEER
A. LYNN MILLER, P.E.
P.E.# 58705

Revsd By:	Date:	Revisions:	
Revsd By:	Date:	Revisions:	
Revsd By: J.J.	Date: 10/13/11	Revisions: A	NO CHANGE THIS SHEET
Drawn By: F.K.	Date: 8/22/07	Checked By: J.J.	Date: XX/XX/07

1070 TECHNOLOGY DRIVE
NOKOMIS, FL 34275

P.O. BOX 1529
NOKOMIS, FL 34274

PGT
Visibly Better

Description: VERTICAL SECTION DETAILS

Title: ALUM. SLIDING GLASS DOOR, NON-IMPACT

Series/Model:	Scale:	Sheet:	Drawing No.	Rev:
SGD680	1/2x	16 of 20	8100-12	A

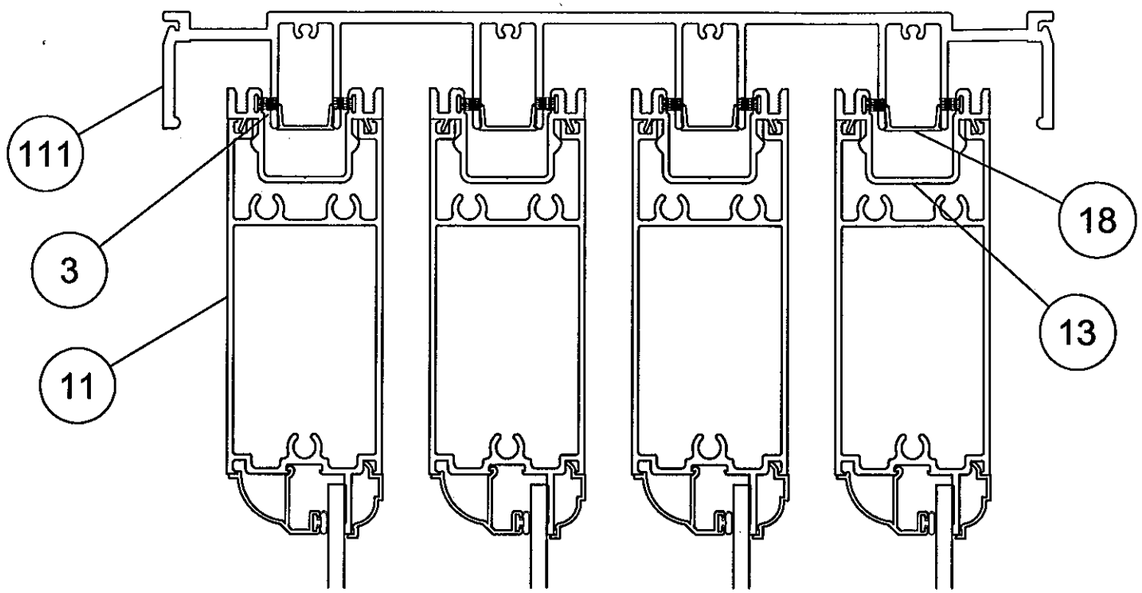

DETAIL 'O'

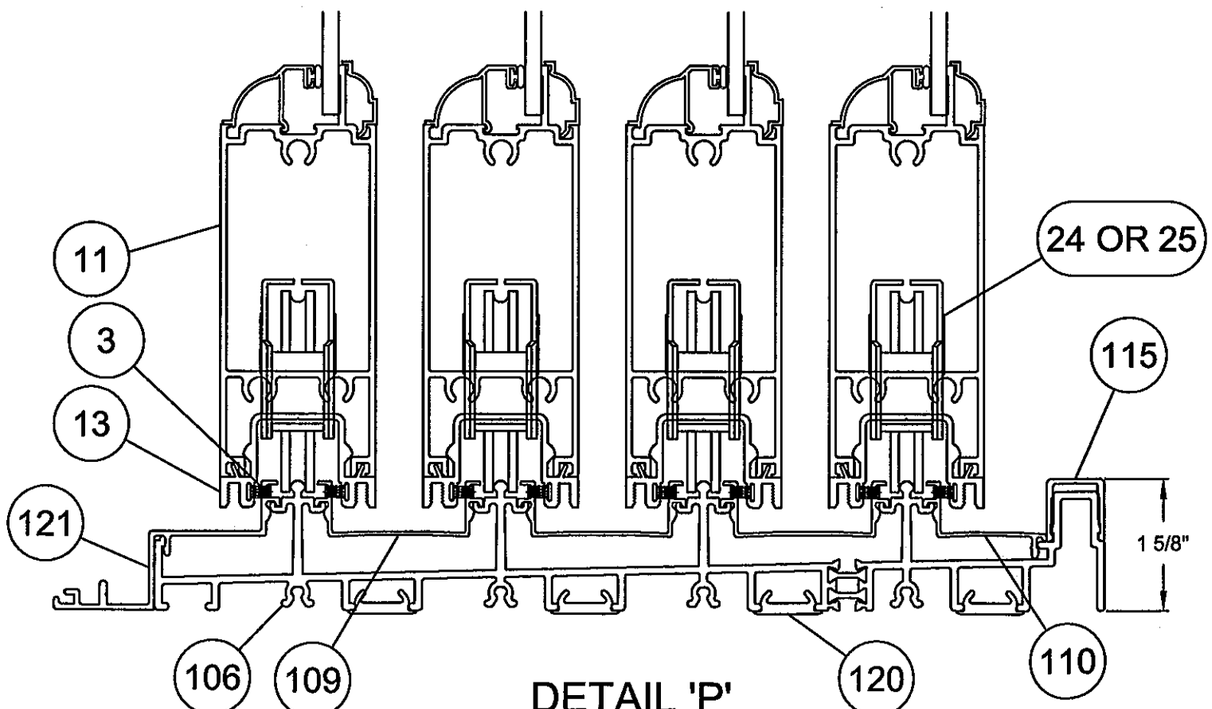

DETAIL 'P'

EXTERIOR INTERIOR
(ALL VERT. SECTIONS)

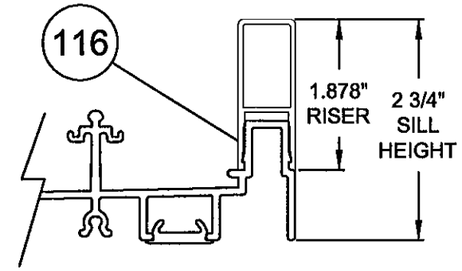

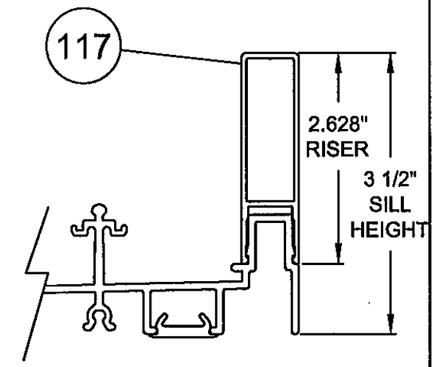

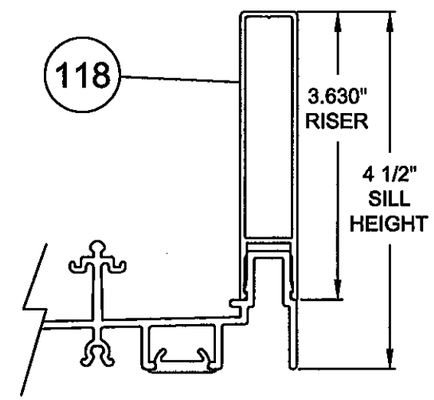

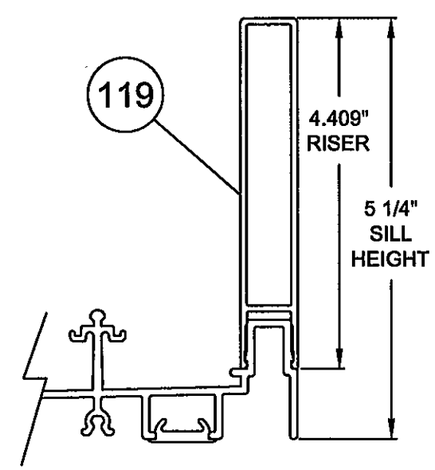

SILL RISERS OPTIONS

PRODUCT REVISED
as complying with the Florida
Building Code
Acceptance No 11-1018.13
Expiration Date 03/11/2014
By
Miami Dade Product Control

ANTHONY LYNN MILLER
LICENSE
No. 58705
10/14/11
STATE OF FLORIDA
PROFESSIONAL ENGINEER

A. LYNN MILLER, P.E.
P.E.# 58705

Revsd By:	Date:	Revisions:	
Revsd By:	Date:	Revisions:	
Revsd By: J.J.	Date: 10/13/11	Revisions: A	NO CHANGE THIS SHEET
Drawn By: F.K.	Date: 8/22/07	Checked By: J.J.	Date: XX/XX/07

1070 TECHNOLOGY DRIVE
NOKOMIS, FL 34275

P.O. BOX 1529
NOKOMIS, FL 34274

PGT
Visibly Better

Description: VERTICAL SECT. DETAILS & SILL RISERS OPT.				
Title: ALUM. SLIDING GLASS DOOR, NON-IMPACT				
Series/Model: SGD680	Scale: 1/2x	Sheet: 17 of 20	Drawing No. 8100-12	Rev: A

SGD680 PANEL PARTS

ITEM	DWG #	PGT #	DESCRIPTION
1	8012	68012 B/W	PANEL STILE
2	8104	68104 B/W	STILE ADAPTER (FIXED AND LOCKING)
3	1644	61644G	WEATHERSTRIP, .270 X .187 WSTP 4PLY GREY
4	8102	68102C B/W	INTERLOCK ADAPTER (LEFT AND RIGHT)
5	7070	67070K	NEOPRENE BULB WEATHERSTRIP
11	8014-1	68014A B/W	TOP RAIL / SMALL BOTTOM RAIL
12	8013-2	68013A B/W	TALL BOTTOM RAIL
13	8103B	68103B B/W	SNAP RAIL ADAPTER
15	8105	68105 B/W	BACKER PLATE
18	8136	68136 B/W	SCREW COVER
19		7516X2LBOLTX	5/16" X 2" LAGBOLT, (STAINLESS)
19A	8197	48197N	LAGBOLT WASHER, NYLON
20		78X34PPTX410	#8X 3/4" PHIL PAN TEK SCREW 410 SS
21	1695	71695K	1 1/2"W X 1"L X 3/4"H FIN SEAL DUST PLUGS
22		710X115PPX	SCREW #10X 1 1/2" PHIL PAN SMS
24	8153N	78153N	TANDEM NYLON ROLLER ASSEMBLY
25	8153X	78153X	TANDEM STAINLESS STEEL ROLLER ASSEMBLY
26	8022	68022 (B/W)	INTERIOR BEAD
27	8024A	68024A (B/W)	7/8" NON IMPACT IG BEAD (OGEE STYLE)
28	8107B	68107B B/W	ASTRAGAL
34	8144	68144 (B/W)	1/4"& 3/16" OGEE BEAD
36	8025	68025 (B/W)	3/16" OGEE BEAD
38	8147	68147 (B/W)	1/4" SQUARE BEAD HORIZONTAL
46	1224	6TP247 (K)	VINYL GLAZING BULB
47	1643	61643K	FOAM FILLED NEOPRENE GLAZING BULB
49	8048	78048K	SETTING BLOCKS 1/2" X 4" X 1/8", MONO
50	8047	78047K	SETTING BLOCKS 1" X 4" X 1/8", IG
51	8185	78185X	GEMINI LOCK W/ LONG TRIM PLATE
52	8184	78184X	GEMINI LOCK W/ POCKET TRIM PLATE
53		71032X1FPFX	10-32 X 1" LG FLATHEAD SS SCREW W/TYPE "F" TIP
54		7103239	10-32 STEEL ZINC U-NUT
55			DOW 899, 995 OR INSTANTGLAZE GLAZING SILICONE
58	8156	68156 B/W	INTERLOCK TRIM COVER
59	8175	48175 W/B	CORNER ASTRAGAL SEALS
60	8111	68111 B/W	CORNER RECEIVER ASTRAGAL
61	8110	68110 B/W	CORNER LOCK ASTRAGAL
62	8112	68112	CORNER BACKER PLATE
74	1/4" TEMPERED GLASS		
75	3/16" TEMPERED GLASS		
76	GLASS, 7/8" LAMI, W/ 3/16" TEMPER		
77	GLASS, 7/8" LAMI, W/ 1/4" TEMPER		

SGD680 DOOR FRAME PARTS

ITEM	DWG #	PGT #	DESCRIPTION
100	8132	68132W,B	4 TRACK JAMB
101	8133	68133W,B	3 TRACK JAMB
102	8134	68134W,B	2 TRACK JAMB
103	8135	68135W,B	2 TRACK JAMB W/ SCREEN TRACK
104	8108	68108 B/W	P-HOOK
105	8109	68109 B/W	P-HOOK MOUNT
106	8120	68120A	4T SILL ASSEMBLY
107	8116	68116A	3T SILL
108	8118	68118A	2T SILL

SGD680 DOOR FRAME PARTS CONTINUED

ITEM	DWG #	PGT #	DESCRIPTION
109	8115	68115A	MID SILL COVER
110	8117	68117A	INT-EXT SILL COVER
111	8121A	68121A W/B	4T SINGLE HEAD
112	8124A	68124A W/B	3T SINGLE HEAD
113	8127A	68127A W/B	2T SINGLE HEAD
114	8128A	68128A W/B	2T W/ SCRN SINGLE HEAD
115	8140	68140A	SILL RISER, 1 5/8"
116	8139	68139A	SILL RISER, 2 3/4"
117	8138	68138A	SILL RISER, 3 1/2"
118	8137	68137A	SILL RISER, 4 1/2
119	8182	68182A	SILL RISER, 5 1/4
120	8183	68183	SILL MOUNTING STRIP
121	8119	68119A	EXT SILL COVER WSCRN

SGD680 MISC. & KIT PARTS

ITEM	DWG #	PGT #	DESCRIPTION
125		781PQA	FRAME SCREW #8 X 1 TYPE A TWINFAST THREAD
126	1270	7PAD118	PAD, OPEN-CELL FOAM ADHESIVE (1/2 X 1 1/8)
127	1179	710X34PPSDAX	#10X 3/4" TEK TIP PHIL PAN SCREW
	653	7SDKEEP	SCREEN LOCK KEEPER
128	727	41818K	SCREEN KEEPER SPACER SET
129	947	41722W,K,S	ROLLER ADJUSTMENT HOLE PLUG
130	N/A	72087K	BLACK BUMPER (FRAME JAMB)
131	N/A	76X38PPAX	#6 X 3/8" PHILLIPS PAN HEAD 18-8 SS
132		44432 W,B	COME A LONG
133	1155	781PQX	8 X 1" LONG COMBO SQ/PHIL SCREW 18-8 STST
134	1696	71696G	1 5/8" W X 3/4" L X 7/8" H FIN SEAL DUST PLUGS
141	4385	71164W,K,S	4 HOLE BUMPER STOP
142		78X38PPTX	#8 X 3/8" PAN PHILLIPS TEK SCREW
143	8188	68188	"O" PANEL BRACKET ---12" LONG
148	8192	68192 M	INTERLOCK REINFORCEMENT
150	8157	78157K	HANDLE KIT IN-ACTIVE BLACK
151	8158	78158W	HANDLE KIT IN-ACTIVE SATIN WHITE
152	8159	78159SN	HANDLE KIT IN-ACTIVE SATIN NICKEL PVD
153	8177	78177B	HANDLE KIT IN-ACTIVE BRASS PVD
154	8160	78160K	HANDLE KIT ACTIVE NON-KEYED BLACK
155	8161	78161W	HANDLE KIT ACTIVE NON-KEYED SATIN WHITE
156	8162	78162SN	HANDLE KIT ACTIVE NON-KEYED SATIN NICKEL PVD
157	8178	78178B	HANDLE KIT ACTIVE NON-KEYED BRASS PVD
158	8163	78163K	HANDLE KIT ACTIVE KEYED BLACK
159	8164	78164W	HANDLE KIT ACTIVE KEYED SATIN WHITE
160	8165	78165SN	HANDLE KIT ACTIVE KEYED SATIN NICKEL PVD
161	8179	78179B	HANDLE KIT ACTIVE KEYED BRASS PVD
162	8166	78166WR	SECONDARY ACTUATOR KIT R.H. BLACK
163	8167	78167WR	SECONDARY ACTUATOR KIT R.H. SATIN WHITE
164	8168	78168SNR	SECONDARY ACTUATOR KIT R.H. SATIN NICKEL PVD
165	8180	78180B	SECONDARY ACTUATOR KIT R.H. BRASS PVD
166	8169	78169KL	SECONDARY ACTUATOR KIT L.H. BLACK
167	8170	78170WL	SECONDARY ACTUATOR KIT L.H. SATIN WHITE
168	8171	78171SNL	SECONDARY ACTUATOR KIT L.H. SATIN NICKEL PVD
169	8181	78181B	SECONDARY ACTUATOR KIT L.H. BRASS PVD
170	8186	78186X	1" KEEPER
171	8187	78187X	3/4" KEEPER

PRODUCT REVISED
as complying with the Florida
Building Code
Acceptance No 11-1018.13
Expiration Date 03/18/2014
By
Miami Dade Product Control

ANTHONY LYNN MILLER
LICENSE
No. 58705
10/14/11
STATE OF FLORIDA
PROFESSIONAL ENGINEER
A. LYNN MILLER, P.E.
P.E.# 58705

Revsd By:	Date:	Revisions:	
Revsd By:	Date:	Revisions:	
Revsd By: J.J.	Date: 10/13/11	Revisions: A	NO CHANGE THIS SHEET
Drawn By: F.K.	Date: 8/22/07	Checked By: J.J.	Date: XX/XX/07

1070 TECHNOLOGY DRIVE
NOKOMIS, FL 34275

P.O. BOX 1529
NOKOMIS, FL 34274

PGT
Visibly Better

Description: PARTS LIST

Title: ALUM. SLIDING GLASS DOOR, NON-IMPACT

Series/Model:	Scale:	Sheet:	Drawing No.	Rev:
SGD680	1/4x	18 of 20	8100-12	A

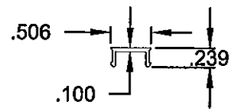

INTERLOCK TRIM COVER
(58) MAT'L: 6063-T6
DWG NO. 8156

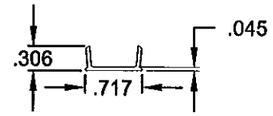

FRAME SCREW COVER
(18) MAT'L: 6063-T6
DWG NO. 8136

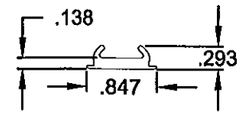

SILL MOUNTING STRIP
(120) MAT'L: 6063-T6
DWG NO. 8183

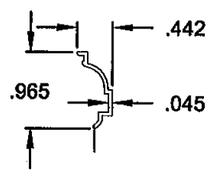

INTERIOR BEAD
(26) MAT'L: 6063-T5
DWG NO. 8022

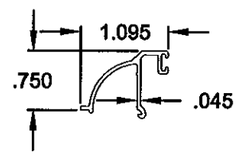

1/4" IG OG BEAD
(34) MAT'L: 6063-T6
DWG NO. 8144

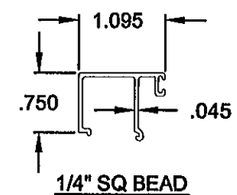

1/4" SQ BEAD
(38) MAT'L: 6063-T6
DWG NO. 8147

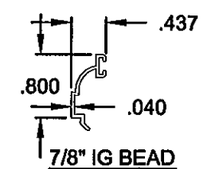

7/8" IG BEAD
(27) MAT'L: 6063-T5
DWG NO. 8024A

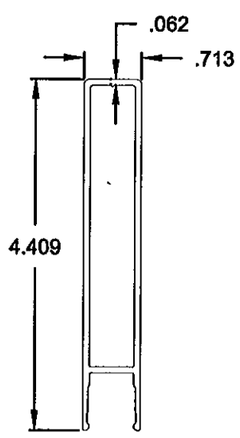

SILL RISER - 5 1/4"
(119) MAT'L: 6063-T6
DWG NO. 8182

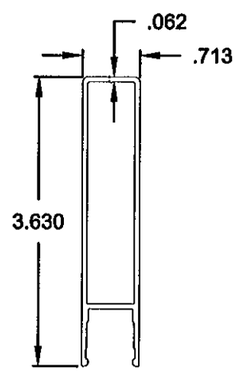

SILL RISER - 4 1/2"
(118) MAT'L: 6063-T6
DWG NO. 8137

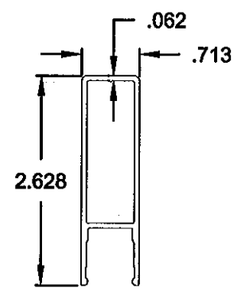

SILL RISER - 3 1/2"
(117) MAT'L: 6063-T6
DWG NO. 8138

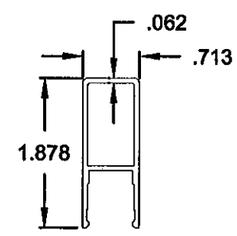

SILL RISER - 2 3/4"
(116) MAT'L: 6063-T6
DWG NO. 8138

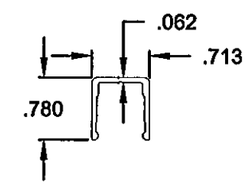

SILL RISER - 1 5/8"
(115) MAT'L: 6063-T6
DWG NO. 8140

PRODUCT REVISED
as complying with the Florida
Building Code
Acceptance No 11-1018.13
Expiration Date 03/12/2014
By
Miami Dade Product Control

ANTHONY LYNN MILLER
LICENSE
No. 58705
10/14/11
STATE OF FLORIDA
PROFESSIONAL ENGINEER
A. LYNN MILLER, P.E.
P.E.# 58705

Revsd By:	Date:	Revisions:	
Revsd By:	Date:	Revisions:	
Revsd By: J.J.	Date: 10/13/11	Revisions: A	NO CHANGE THIS SHEET
Drawn By: F.K.	Date: 8/22/07	Checked By: J.J.	Date: XX/XX/07

1070 TECHNOLOGY DRIVE
NOKOMIS, FL 34275

P.O. BOX 1529
NOKOMIS, FL 34274

PGT
Visibly Better

Description: EXTRUSIONS

Title: ALUM. SLIDING GLASS DOOR, NON-IMPACT

Series/Model:	Scale:	Sheet:	Drawing No.	Rev:
SGD680	1/4x	19 of 20	8100-12	A

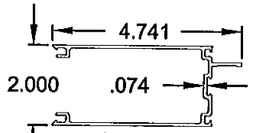

PANEL STILE
(1) MAT'L: 6063-T6
DWG NO. 8012

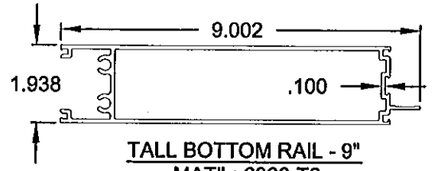

TALL BOTTOM RAIL - 9"
(12) MAT'L: 6063-T6
DWG NO. 8013B

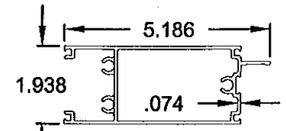

TOP/BOTTOM RAIL - 4 1/2"
(11) MAT'L: 6063-T6
DWG NO. 8014A

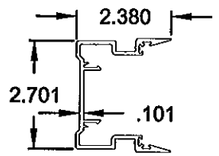

DOUBLE INTERLOCK
(14) MAT'L: 6063-T6
DWG NO. 8101

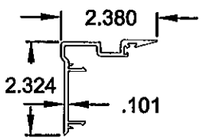

INTERLOCK ADAPTER
(4) MAT'L: 6063-T6
DWG NO. 8102

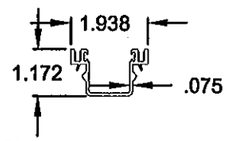

SNAP RAIL ADAPTER
(13) MAT'L: 6063-T6
DWG NO. 8103A

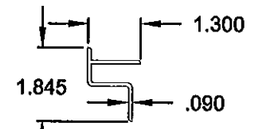

"O" PANEL BRACKET
(143) MAT'L: 6063-T6
DWG NO. 8188

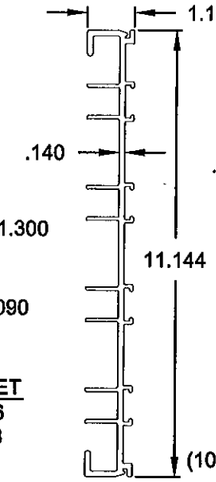

4-TRACK JAMB
(100) MAT'L: 6063-T6
DWG NO. 8132

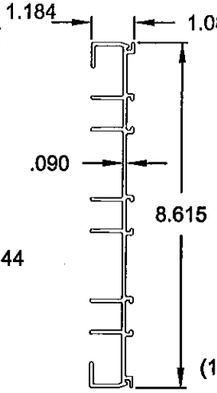

3-TRACK JAMB
(101) MAT'L: 6063-T6
DWG NO. 8133

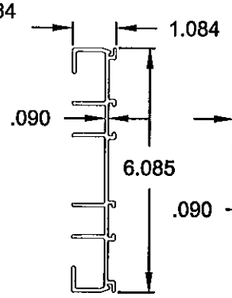

2-TRACK JAMB
(102) MAT'L: 6063-T6
DWG NO. 8134

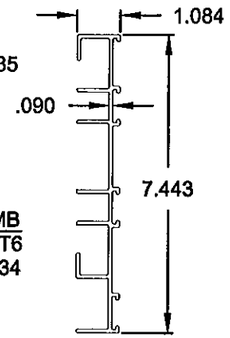

2-TRACK JAMB W/ SCREEN
(103) MAT'L: 6063-T6
DWG NO. 8135

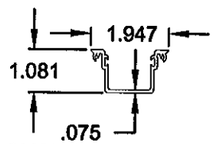

LOCKSTILE ADAPTER
(2) MAT'L: 6063-T6
DWG NO. 8104

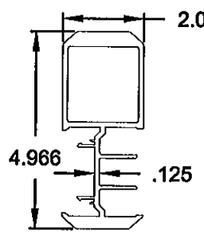

ASTRAGAL
(28) MAT'L: 6063-T6
DWG NO. 8107

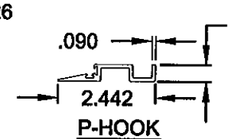

P-HOOK
(104) MAT'L: 6063-T6
DWG NO. 8108

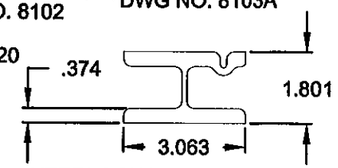

INTERLOCK REINFORCEMENT
(148) MAT'L: 6105-T5
DWG NO. 8192

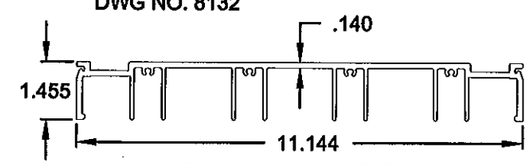

4-TRACK SINGLE HEAD
(111) MAT'L: 6063-T6
DWG NO. 8121A

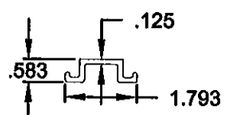

BACKER PLATE
(15) MAT'L: 6063-T6
DWG NO. 8105

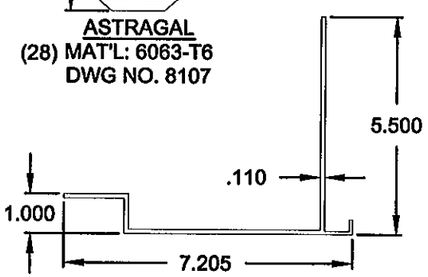

P-HOOK MOUNT
(105) MAT'L: 6063-T6
DWG NO. 8109

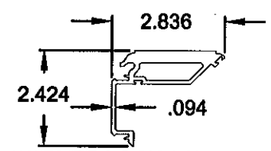

CORNER LOCK ASTRAGAL
(61) DWG NO. 8110
MAT'L: 6063-T6

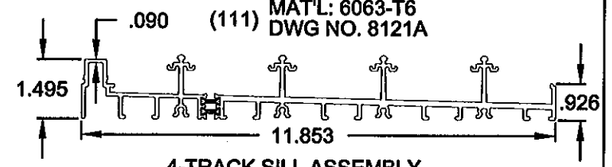

4-TRACK SILL ASSEMBLY
(106) MAT'L: 6063-T6
DWG NO. 8120

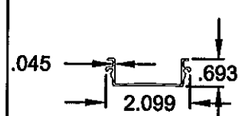

MID SILL COVER
(109) MAT'L: 6063-T6
DWG NO. 8115

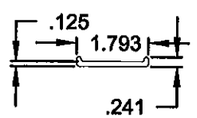

CORNER BACK-UP PLATE
(62) MAT'L: 6063-T6
DWG NO. 8112

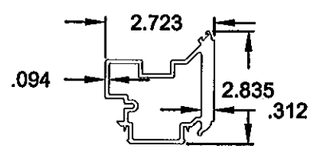

CORNER RECEIVER ASTRAGAL
(60) MAT'L: 6063-T6
DWG NO. 8111

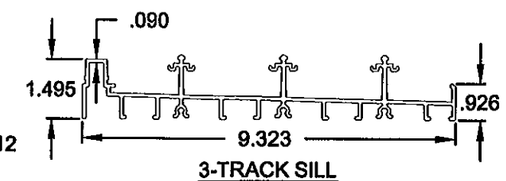

3-TRACK SILL
(107) MAT'L: 6063-T6
DWG NO. 8116

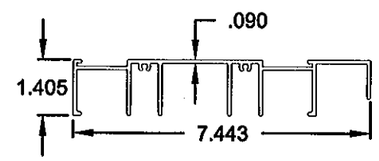

2-TRACK SINGLE HEAD W/ SCREEN
(114) MAT'L: 6063-T6
DWG NO. 8128A

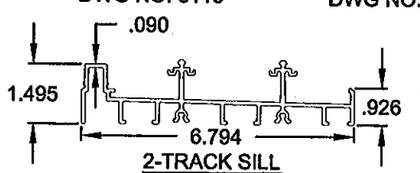

2-TRACK SILL
(108) MAT'L: 6063-T6
DWG NO. 8118

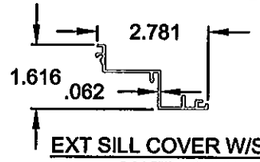

EXT SILL COVER W/SCREEN
(121) MAT'L: 6063-T6
DWG NO. 8119

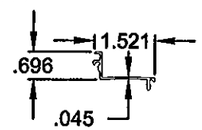

INT-EXT SILL COVER
(110) MAT'L: 6063-T6
DWG NO. 8117

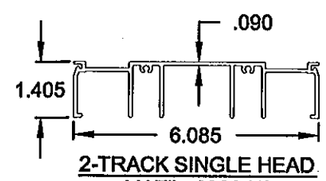

2-TRACK SINGLE HEAD
(113) MAT'L: 6063-T6
DWG NO. 8127A

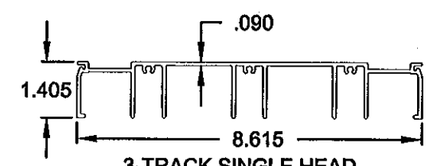

3-TRACK SINGLE HEAD
(112) MAT'L: 6063-T6
DWG NO. 8124A

PRODUCT REVISED
as complying with the Florida
Building Code
Acceptance No 11-1018.13
Expiration Date 03/18/2014
By
Miami Dade Product Control

ANTHONY LYNN MILLER
LICENSE
No. 58705
STATE OF FLORIDA
PROFESSIONAL ENGINEER
10/14/11
A. LYNN MILLER, P.E.
P.E.# 58705

Revsd By:	Date:	Revisions:	
Revsd By:	Date:	Revisions:	
Revsd By: J.J.	Date: 10/13/11	Revisions: A	NO CHANGE THIS SHEET
Drawn By: F.K.	Date: 8/22/07	Checked By: J.J.	Date: XX/XX/07

1070 TECHNOLOGY DRIVE
NOKOMIS, FL 34275

P.O. BOX 1529
NOKOMIS, FL 34274

PGT
Visibly Better

Description: EXTRUSIONS

Title: ALUM. SLIDING GLASS DOOR, NON-IMPACT

Series/Model:	Scale:	Sheet:	Drawing No.	Rev:
SGD680	1/4x	20 of 20	8100-12	A