MIAMI-DADE COUNTY
DEPARTMENT OF PERMITTING, ENVIRONMENT, AND REGULATORY AFFAIRS (PERA)
BOARD AND CODE ADMINISTRATION DIVISION

NOTICE OF ACCEPTANCE (NOA)

MIAMI-DADE COUNTY
PRODUCT CONTROL SECTION
11805 SW 26 Street, Room 208
Miami, Florida 33175-2474
T (786) 315-2590 F (786) 315-2599
www.miamidade.gov/pera/

PGT Industries
1070 Technology Drive,
Nokomis, Fl. 34275

SCOPE:

This NOA is being issued under the applicable rules and regulations governing the use of construction materials. The documentation submitted has been reviewed and accepted by Miami-Dade County PERA -Product Control Section to be used in Miami Dade County and other areas where allowed by the Authority Having Jurisdiction (AHJ).

This NOA shall not be valid after the expiration date stated below. The Miami-Dade County Product Control Section (In Miami Dade County) and/or the AHJ (in areas other than Miami Dade County) reserve the right to have this product or material tested for quality assurance purposes. If this product or material fails to perform in the accepted manner, the manufacturer will incur the expense of such testing and the AHJ may immediately revoke, modify, or suspend the use of such product or material within their jurisdiction. PERA reserves the right to revoke this acceptance, if it is determined by Miami-Dade County Product Control Section that this product or material fails to meet the requirements of the applicable building code.

This product is approved as described herein, and has been designed to comply with the Florida Building Code, including the High Velocity Hurricane Zone.

DESCRIPTION: Series "SGD-770" Aluminum Sliding Glass Doors w / wo Reinforcements

APPROVAL DOCUMENT: Drawing No.**PGT0002 Rev C**, titled "Series 770 Alum SGD-LMI", sheets 1 through 23 of 23, prepared by manufacturer, dated 08/05/07 and last revised on 10/11/11, signed and sealed by Lynn Miller, P.E., bearing the Miami-Dade County Product Control Revision stamp with the Notice of Acceptance number and expiration date by the Miami-Dade County Product Control Section.

MISSILE IMPACT RATING: Large and Small Missile Impact Resistant

Limitations:

1. See table 1, 2 & 3, sheets 7, 8 & 9 of this approved drawing set for applicable SGD unit sizes, design pressures, reinforcements, glass types, sill riser and anchors requirements.
2. Egress operable doors must comply with min clear width per FBC, as applicable.
3. All laminated glazing options are with interior HS glass, see glazing options, sheet 1, 5 & 6.

LABELING: Each unit shall bear a permanent label with the manufacturer's name or logo, city, state and series and following statement: "Miami-Dade County Product Control Approved", unless otherwise noted herein.

RENEWAL of this NOA shall be considered after a renewal application has been filed and there has been no change in the applicable building code negatively affecting the performance of this product.

TERMINATION of this NOA will occur after the expiration date or if there has been a revision or change in the materials, use, and/or manufacture of the product or process. Misuse of this NOA as an endorsement of any product, for sales, advertising or any other purposes shall automatically terminate this NOA. Failure to comply with any section of this NOA shall be cause for termination and removal of NOA.

ADVERTISEMENT: The NOA number preceded by the words Miami-Dade County, Florida, and followed by the expiration date may be displayed in advertising literature. If any portion of the NOA is displayed, then it shall be done in its entirety.

INSPECTION: A copy of this entire NOA shall be provided to the user by the manufacturer or its distributors and shall be available for inspection at the job site at the request of the Building Official.

This NOA **revises NOA # 09-0826.10** and consists of this page 1 and evidence pages E-1, as well as approval document mentioned above.

The submitted documentation was reviewed by **Ishaq I. Chanda, P.E.**

MIAMI-DADE COUNTY APPROVED

11/22/11

NOTICE OF ACCEPTANCE: EVIDENCE SUBMITTED

A. DRAWINGS

1. Manufacturer's die drawings and sections (transferred from file **# 09-0826.10**).
2. Drawing No.**PGT0002 Rev C**, titled "Series 770 Alum SGD-LMI", sheets 1 through 23 of 23, prepared by manufacturer, dated 08/05/07 and last revised on 10/11/11, signed and sealed by Lynn Miller, P.E.

B. TESTS (transferred from file **# 09-0826.10**)

Test report on 1) Air Infiltration Test, per FBC, TAS 202-94
2) Uniform Static Air Pressure Test, per FBC, TAS 202-94
3) Water Resistance Test, per FBC, TAS 202-94.
4) Large Missile Impact Test per FBC, TAS 201-94
5) Cyclic Wind Pressure Loading per FBC, TAS 203-94
6) Forced Entry Test, per FBC 2411.3.2.1 (b) and TAS 202-94

Along with marked-up drawings and installation diagram of aluminum Sliding Glass Doors, prepared by Fenestration Testing Laboratory, Inc., Test Report No **FTL-5980, FTL-5993, FTL-6036, FTL-6001, FTL-6014, FTL-6015, FTL-6017, FTL-6023, FTL-6024, FTL-6025, FTL-6028, FTL-6031, FTL-6033 and FTL-6036** dated 08/10/09, all signed and sealed by Julio Gonzales, P.E.

Note: The test reports No. **FTL 5980, FTL 6001** and **FTL 6015** have been revised and reissued on 12/29/09, signed and sealed by Julio Gonzales, P.E.

C. CALCULATIONS

1. Statement letter dated OCT 11, 2011 of compliance to FBC 2007 & FBC 2010, prepared by PGT, signed & sealed by Lynn Miller, P.E.
2. Statement letter dated 10/07/11, Successor Engineer adopting the another engineer's work per FAR 61G15-27-001, signed & sealed by Lynn Miller, P.E.
3. Anchor verification and comparative analysis dated 08-19-09, 12/03/09, 01/06/10 and last revised on 01/08/10, prepared by PTC, LLC, Robert J. Amoruso, P.E. (transferred from file **# 09-0826.10**)
4. Glazing complies with ASTME-1300-02 &-04

D. QUALITY ASSURANCE

1. Miami Dade Department of Permitting, Environment, and Regulatory Affairs (PERA).

E. MATERIAL CERTIFICATIONS

1. Notice of Acceptance No. **07-1116.04** issued to E.I. DuPont De Nemours & CO., Inc. for "DuPont SentryGlas ® Plus", expiring on 01/14/2012.
2. Notice of Acceptance No. **11-0624.01** issued to "E.I. DuPont Denemours" for "DuPont Butacite ® PVB", expiring on 12/11/16.

F. STATEMENTS

1. Statement letter dated OCT 11, 2011 of compliance to FBC 2007 & FBC 2010 and "No financial interest", prepared by PGT, signed & sealed by Lynn Miller, P.E.
1. Statement letter of conformance to FBC 2007 and no financial interest, dated 08-19-09, signed by Robert J. Amoruso, P.E. (transferred from file **# 09-0826.10**)
2. Letter of lab compliance, part of the above test reports.

G. OTHER

1. This NOA **revises # 09-0826.10**, expiring February 17, 2015.
2. Test proposals No(s) **09-0177, 0177-A, B & C** approved by BCCO.

Ishaq I. Chanda

Ishaq I. Chanda, P.E.
Product Control Examiner
NOA No 11-1018.14
Expiration Date: February 17, 2015
Approval Date: December 01, 2011

GENERAL NOTES: SERIES 770 LMI SLIDING GLASS DOOR

1. GLAZING TYPE OPTIONS: (GLASS RECIPES ARE FROM EXTERIOR TO INTERIOR)
   GLASS STRENGTHS - T = TEMPERED HS = HEAT STRENGTHED
   INTERLAYER TYPES - SGP = .090 DUPONT SENTRY GLAS PLUS DBPVB = .090 DUPONT BUTACITE PVB
   G3 - 7/16" LAMINATED: (2) LITES OF 3/16" HS GLASS WITH AN .090 DBPVB INTERLAYER.
   G4 - 7/16" LAMINATED: (2) LITES OF 3/16" HS GLASS WITH AN .090 SGP INTERLAYER.
   G3A - 9/16" LAMINATED: (2) LITES OF 1/4" HS GLASS WITH AN .090 DBPVB INTERLAYER.
   G4A - 9/16" LAMINATED: (2) LITES OF 1/4" HS GLASS WITH AN .090 SGP INTERLAYER.
   G5 - 1" LAMINATED I.G. 3/16" T EXT. CAP + 3/8" AIR SPACE + 7/16" LAMINATED: (2) LITES OF 3/16" HS GLASS WITH AN .090 DBPVB INTERLAYER.
   G6 - 1" LAMINATED I.G. 3/16" T EXT. CAP + 3/8" AIR SPACE + 7/16" LAMINATED: (2) LITES OF 3/16" HS GLASS WITH AN .090 SGP INTERLAYER.
   G5A - 1" LAMINATED I.G. 1/4" T EXT. CAP + 5/16" AIR SPACE + 7/16" LAMINATED: (2) LITES OF 3/16" HS GLASS WITH AN .090 DBPVB INTERLAYER.
   G6A - 1" LAMINATED I.G. 1/4" T EXT. CAP + 5/16" AIR SPACE + 7/16" LAMINATED: (2) LITES OF 3/16" HS GLASS WITH AN .090 SGP INTERLAYER.
2. DESIGN PRESSURES:
A. NEGATIVE DESIGN LOADS BASED ON TESTED PRESSURE AND GLASS TABLES ASTM E 1300.
B. POSITIVE DESIGN LOADS BASED ON WATER TEST PRESSURE AND GLASS TABLES ASTM E 1300.
3. ANCHORAGE: THE 33 1/3% STRESS INCREASE HAS NOT BEEN USED IN THE DESIGN OF THIS PRODUCT. MATERIALS, INCLUDING BUT NOT LIMITED TO STEEL SCREWS, THAT COME INTO CONTACT WITH OTHER DISSIMILAR MATERIALS SHALL MEET THE REQUIREMENTS OF THE FLORIDA BUILDING CODE. FOR ANCHORAGE DETAILS SEE SHEETS 7 THROUGH 15.
4. SHUTTERS ARE NOT REQUIRED.
5. INSTALLATION SCREWS, FRAME AND PANEL CORNERS TO BE SEALED WITH NARROW JOINT SEALANT.
6. REFERENCES:
TEST REPORTS FTL-5980, FTL-5993, FTL-6001, FTL-6014, FTL-6015, FTL-6017, FTL-6022, FTL-6023, FTL-6024, FTL-6025, FTL-6028, FTL-6031, FTL-6033 AND FTL-6036, DATED 8/7/09.
ELCO TEXTRON NOA: 07-0425.01, 03-0225.05, ANSI/AF&PA NDS-2005 FOR WOOD CONSTRUCTION AND ADM-2005 ALUMINUM DESIGN MANUAL
7. THIS PRODUCT HAS BEEN DESIGNED & TESTED TO COMPLY WITH THE REQUIREMENTS OF THE FLORIDA BUILDING CODE, INCLUDING THE HIGH VELOCITY HURRICANE ZONE (HVHZ).
8. DOOR SIZES MUST BE VERIFIED FOR COMPLIANCE WITH EGRESS REQUIREMENTS PER FLORIDA BUILDING CODE, AS APPLICABLE.
9. CONFIGURATIONSI SEE DP TABLES (SHEETS 7-9) AND CONFIGURATION ILLUSTRATIONS (SHEETS 2-4).
A. D.L.O. WIDTH = PANEL WIDTH - 7" B. D.L.O. HEIGHT = PANEL HEIGHT - 8.25"

NOTES PERTAINING TO ANCHORAGE DETAILS ON SHTS. 13-15:

1. FOR CONCRETE APPLICATIONS IN MIAMI-DADE COUNTY, USE ONLY MIAMI-DADE COUNTY APPROVED ELCO 1/4" OR 5/16" ULTRACON (FORMERLY TAPCON)CONCRETE SCREWS OR 1/4" ELCO SS4 CRETE-FLEX. SEE TABLE ON THIS SHEET FOR EMBEDMENT, EDGE DISTANCE AND SUBSTRATE REQUIREMENTS.
2. FOR WOOD APPLICATIONS USE #12 STEEL SCREWS (G5). 1/4" ELCO SS4 CRETE-FLEX MAY BE USED INSTEAD OF #12 SCREWS (PAN HEAD).
3. WOOD BUCKS DEPICTED AS 1x ARE LESS THAN 1 1/2" THICK. 1x WOOD BUCKS ARE OPTIONAL IF UNIT IS INSTALLED DIRECTLY TO SOLID CONCRETE. WOOD BUCKS DEPICTED AS 2x ARE 1 1/2" THICK OR GREATER. 1X AND 2X BUCKS (WHEN USED) SHALL BE DESIGNED TO PROPERLY TRANSFER LOADS TO THE STRUCTURE. BUCK DESIGN AND INSTALLATION IS THE RESPONSIBILITY OF THE ENGINEER OR ARCHITECT OF RECORD.
4. FOR ATTACHMENT TO ALUMINUM: THE ALUMINUM SHALL BE A MINIMUM STRENGTH OF 6063-T5 AND A MINIMUM OF 1/8" THICK. THE ALUMINUM STRUCTURAL MEMBER SHALL BE OF A SIZE TO PROVIDE FULL SUPPORT TO THE DOOR FRAME SIMILAR TO THAT SHOWN IN THE DETAILS USING 2x WOOD BUCKS. THE ANCHORS SHALL BE #12 SHEET METAL SCREWS WITH FULL THREAD ENGAGEMENT INTO THE ALUMINUM. IF THESE CRITERIA ARE MET, THE FULL DESIGN PRESSURES USING ANCHORAGE REQUIREMENTS SHOWN IN TABLES 1-3, SHTS. 7-9, FOR ANCHOR TYPE 4 ARE ACCEPTABLE.
5. IF SILL IS TIGHT TO SUBSTRATE, GROUT OR OTHER MATERIAL IS NOT REQUIRED. IF USED, NON-SHRINK, NON-METALLIC GROUT, 3400 PSI MIN., (DONE BY OTHERS) (MAX. 1/4" SHIM SPACE FOR GROUT) MUST FULLY SUPPORT THE ENTIRE LENGTH OF THE SILL THAT IS NOT TIGHT TO THE SUBSTRATE, AND TRANSFER SHEAR LOAD TO SUBSTRATE. IF SUBSTRATE IS WOOD, 30# FELT PAPER OR MASTIC IS REQUIRED BETWEEN THE GROUT AND WOOD SUBSTRATE, OR AS APPROVED BY THE AUTHORITY HAVING JURISDICTION.

DESIGN PRESSURE CHART
SEE TABLES 1, 2 & 3 ON SHEETS 7, 8 & 9

NOA DRAWING MAP

	SHEET
GENERAL NOTES	1
QUALIFIED CONFIG.	2-4
GLAZING DETAILS	5-6
ANCHORAGE	7-15
DESIGN PRESSURES	7-9
ELEVATIONS	15-16
CONFIGURATIONS	17
VERT. SECTIONS	18
HORIZ. SECTIONS	19-20
PARTS LIST	21
EXTRUSIONS	22-23

Concrete Screw Anchorage Minimum Embedment and Minimum Edge Distance Requirements

		Head and Sill		Jambs			
		Concrete		Un-Grouted CMU		Grouted CMU	
Type	Dia.	Min. Emb.	Min. Ed	Min. Emb.	Min. Ed	Min. Emb.	Min. Ed
Elco Ultracon	1/4"	1 3/8	2 1/2	1 1/4	2 1/2	1 3/4	2 1/2
	5/16"	1 3/4	1 1/4	1 1/4	1 9/16	1 3/4	2 1/2
Elco Crete-Flex SS4	1/4"	1 3/4	2 1/2	1 1/4	2 1/2	Not Recommended	

		P-Hook (Anchor Tension)				P-Hook Mounting Adapter (Anchor Shear)			
		Concrete		Grouted CMU		Concrete		Grouted CMU	
Type	Dia.	Min. Emb.	Min. Ed	Min. Emb.	Min. Ed	Min. Emb.	Min. Ed	Min. Emb.	Min. Ed
Elco Ultracon	1/4"	1 3/4	2 1/2	1 3/4	2 1/2	1 3/4	2 1/2	1 3/4	1 1/4
Elco Crete-Flex SS4	1/4"	1 3/4	2 1/2	Not Recommended		1 3/4	2 1/2	Not Recommended	

Concrete Strength Requirements		
Type	Dia.	fc'
Elco Ultracon	1/4"	2700 psi
	5/16"	3500 psi
Elco Crete-Flex SS4	1/4"	3350 psi

Masonry Strength Requirements	
Ungrounted CMU	ASTM C-90
Grouted CMU	ASTM C-90 with grout conforming to Sections 2105.2.2.1.2 and R609 of the FBC.

Definitions:
Emb. = Embedment
Ed = Edge Distance
Min. = Minimum

CONCRETE SCREWS STRENGTHS:
Fy MIN. = 135 KSI
Fu MIN. = 177 KSI

Wood Screws (Head, Sill & Jambs) in.		
Type	Min. Emb.	Min. Ed
#12 Wood Screw	1 3/8"	1"
Elco Crete-Flex SS4	1 3/8"	1"

UNLESS OTHERWISE NOTED

PRODUCT REVISED
as complying with the Florida Building Code
Acceptance No. 11-1018.14
Expiration Date 2/17/2015
By: Ishaq I. Chanda
Miami Dade Product Control

Revsd By:	Date:	Revisions:	
J.J.	10/11/11	C	FBC 2010 CODE CHANGE
SMC	01/05/10	B	PER MIAMI DADE COMMENTS
SMC	11/16/09	A	PER MIAMI DADE COMMENTS
Drawn By: SMC	Date: 08/05/07	Checked By:	Date:

1070 TECHNOLOGY DRIVE
NOKOMIS, FL 34275
P.O. BOX 1529
NOKOMIS, FL 34274

PGT®

Description: GENERAL NOTES AND MAP
Title: SERIES 770 ALUMINUM SGD - LMI

Series/Model:	Scale:	Sheet:	Drawing No.	Rev:
SGD770	NTS	1 of 23	PGT0002	C

ANTHONY LYNN MILLER LICENSE No. 58705 STATE OF FLORIDA PROFESSIONAL ENGINEER
10/11/11
A. LYNN MILLER, P.E.
P.E.# 58705

APPROVED CONFIGURATIONS:

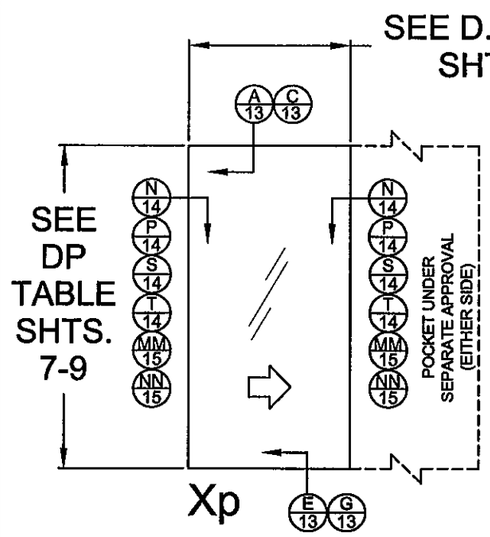

Xp

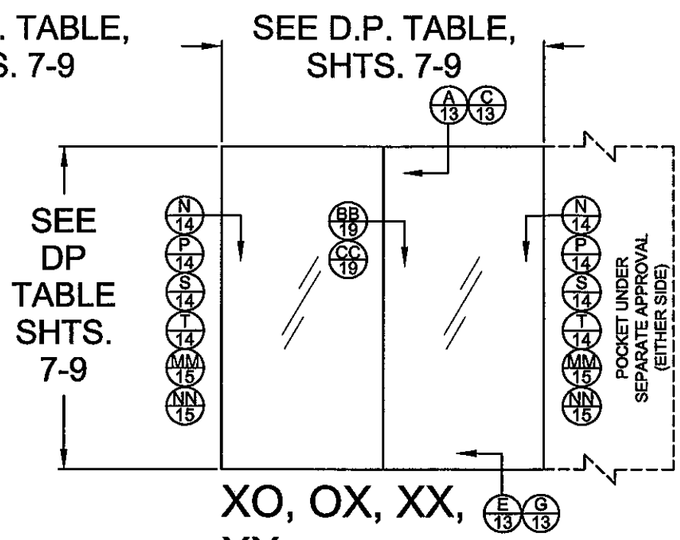

XO, OX, XX, XXp

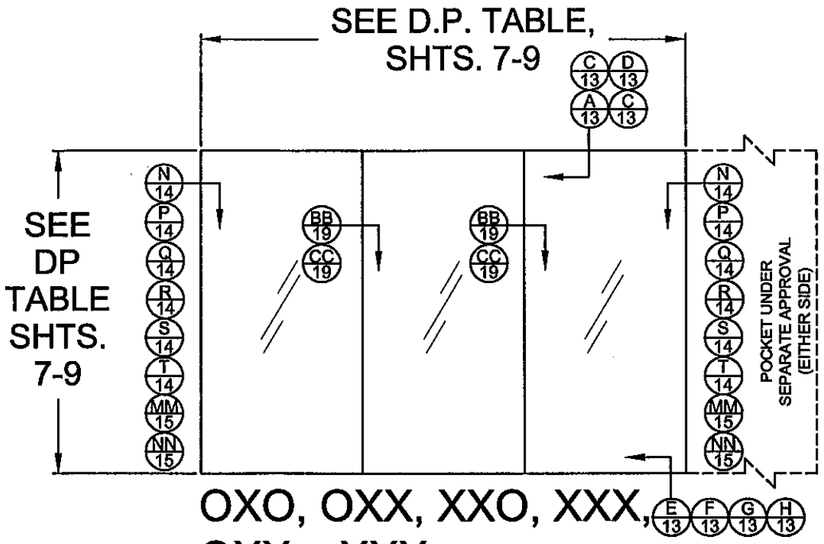

OXO, OXX, XXO, XXX, OXXp, XXXp

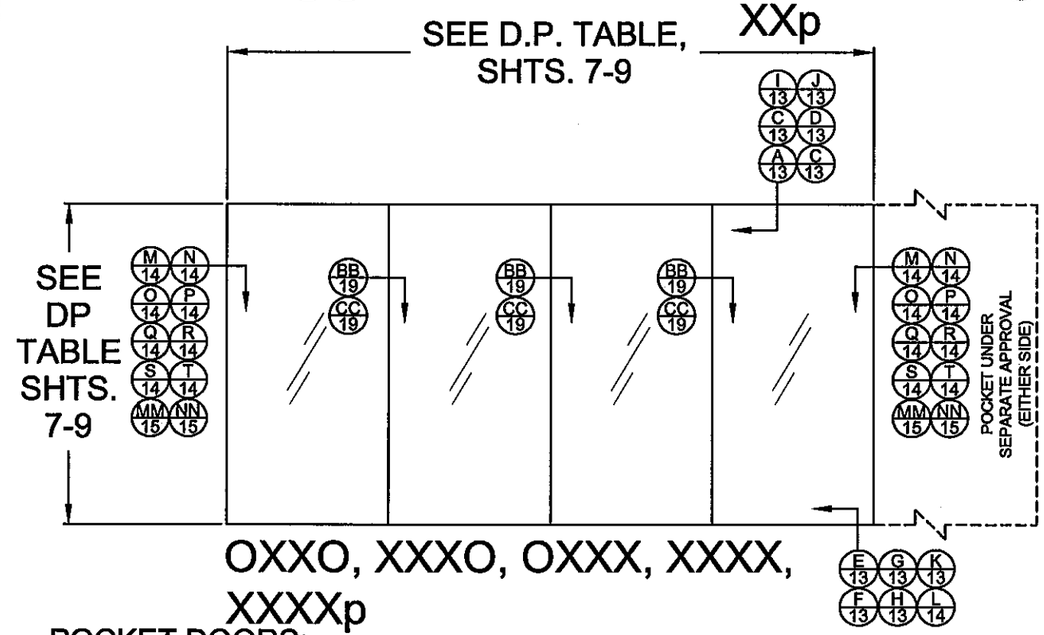

OXXO, XXXO, OXXX, XXXX, XXXXp

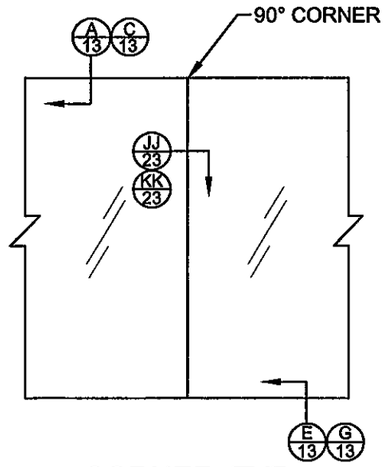

CORNER, TYP.

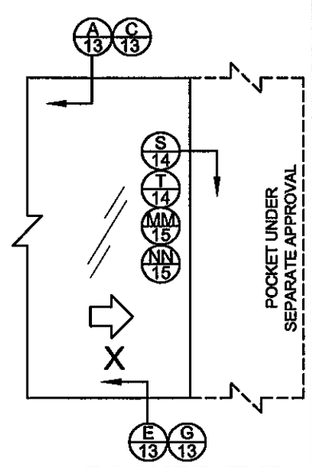

POCKET, TYP.

POCKET DOORS:

ALL CONFIGURATIONS SHOWN ALSO AVAILABLE AS POCKET DOORS AT EITHER JAMB LOCATION USING DETAIL "S" OR "T" INSTALLATION. EXAMPLE:
XXXX IN POCKET CONFIGURATION CAN BE pXXXXp, pXXXX OR XXXXp. OXXX IN POCKET CONFIGURATION CAN BE OXXXp. POCKET DOOR REQUIRES OPERABLE PANEL.
X SIGNIFIES OPERABLE PANEL, O SIGNIFIES INOPERABLE PANEL.

PRODUCT REVISED
as complying with the Florida Building Code
Acceptance No 11-1018.14
Expiration Date 2/17/15
By Ishaq I. Chand
Miami Dade Product Control

Revsd By:	Date:	Revisions:	
J.J.	10/11/11	C	NO CHANGE THIS SHEET
SMC	01/05/10	B	PER MIAMI DADE COMMENTS
SMC	11/16/09	A	PER MIAMI DADE COMMENTS
Drawn By: SMC	Date: 08/05/09	Checked By:	Date:

1070 TECHNOLOGY DRIVE
NOKOMIS, FL 34275
P.O. BOX 1529
NOKOMIS, FL 34274

PGT®

Description: QUALIFIED CONFIGURATIONS
Title: SERIES 770 ALUM. SGD - LMI

Series/Model:	Scale:	Sheet:	Drawing No.	Rev:
SGD770	NTS	2 of 23	PGT0002	C

ANTHONY LYNN MILLER
LICENSE
No. 58705
STATE OF FLORIDA
PROFESSIONAL ENGINEER
A. LYNN MILLER, P.E.
P.E.# 58705

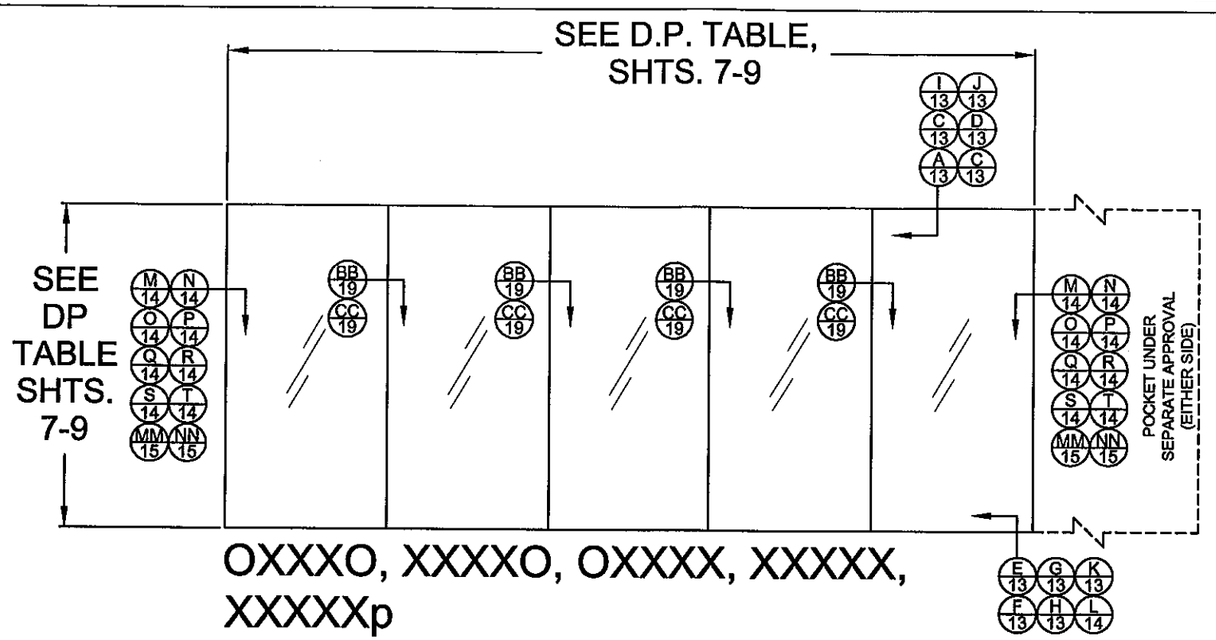

OXXXO, XXXXO, OXXXX, XXXXX, XXXXXp

SEE 90° CORNER EXAMPLE AND POCKET DOOR NOTE ON SHEET 2

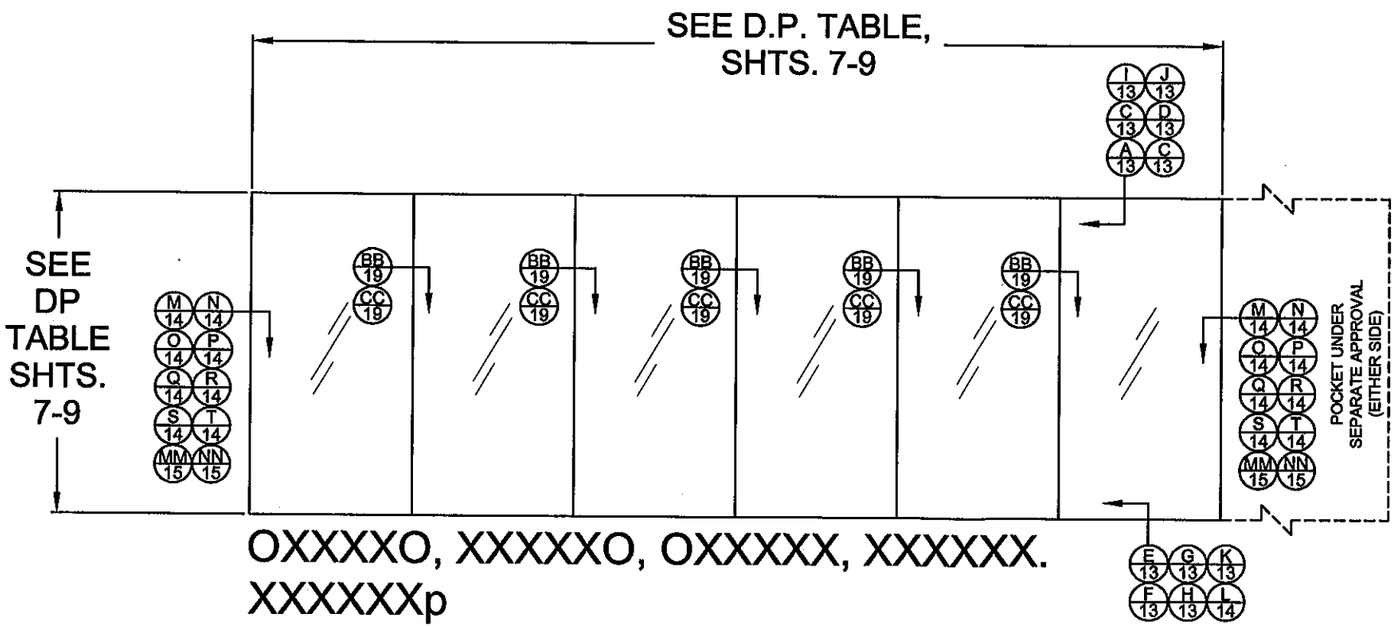

OXXXXO, XXXXXO, OXXXXX, XXXXXX. XXXXXXp

APPROVED CONFIGURATIONS

Revsd By:	Date:	Revisions:	
J.J.	10/11/11	C	NO CHANGE THIS SHEET
SMC	01/05/10	B	PER MIAMI DADE COMMENTS
SMC	11/16/09	A	PER MIAMI DADE COMMENTS
Drawn By: SMC	Date: 08/05/09	Checked By:	Date:

1070 TECHNOLOGY DRIVE
NOKOMIS, FL 34275

P.O. BOX 1529
NOKOMIS, FL 34274

PGT®

Description: QUALIFIED CONFIGURATIONS

Title: SERIES 770 ALUM. SGD - LMI

Series/Model:	Scale:	Sheet:	Drawing No.	Rev:
SGD770	NTS	3 of 23	PGT0002	C

PRODUCT REVISED
as complying with the Florida Building Code
Acceptance No. 11-1018.14
Expiration Date: 2.17.15
By: Ishaq I. Chand
Miami Dade Product Control

ANTHONY LYNN MILLER
LICENSE
No. 58705
STATE OF FLORIDA
PROFESSIONAL ENGINEER
10/11/11

A. LYNN MILLER, P.E.
P.E.# 58705

APPROVED CONFIGURATIONS:

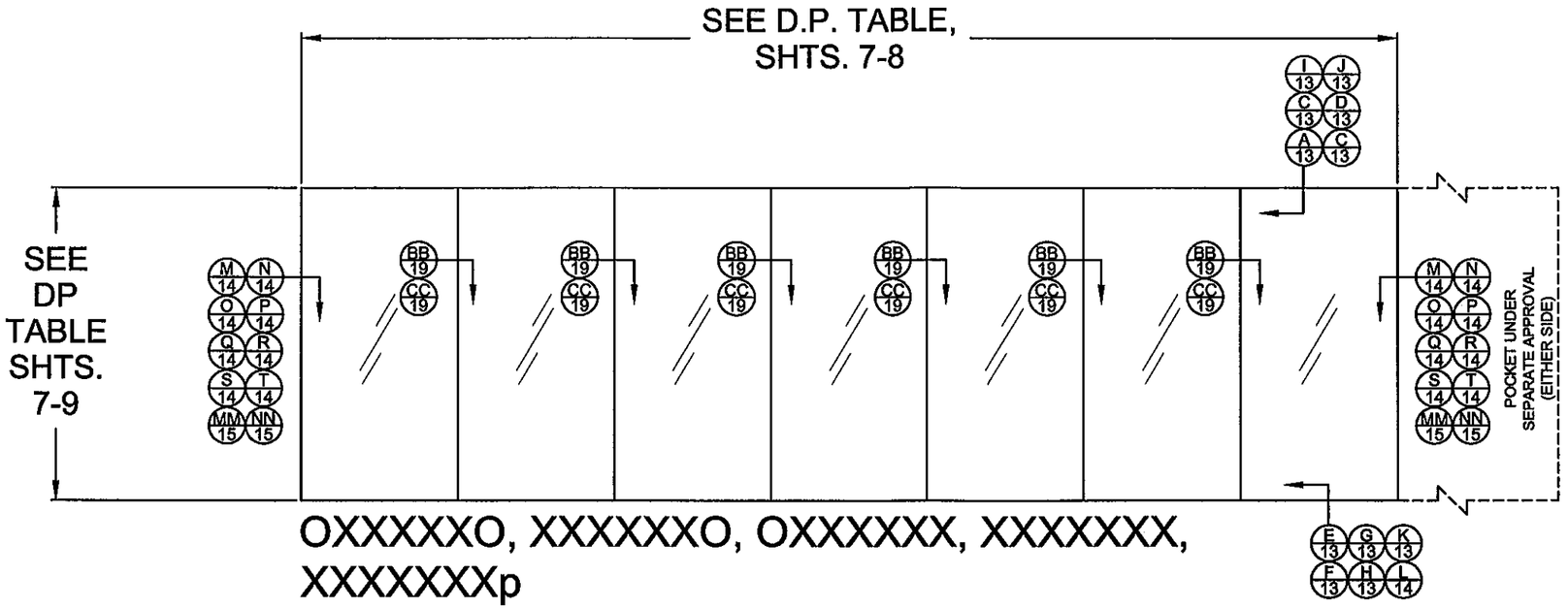

OXXXXXO, XXXXXXO, OXXXXXX, XXXXXXX, XXXXXXXp

SEE 90° CORNER EXAMPLE AND POCKET DOOR NOTE ON SHEET 2

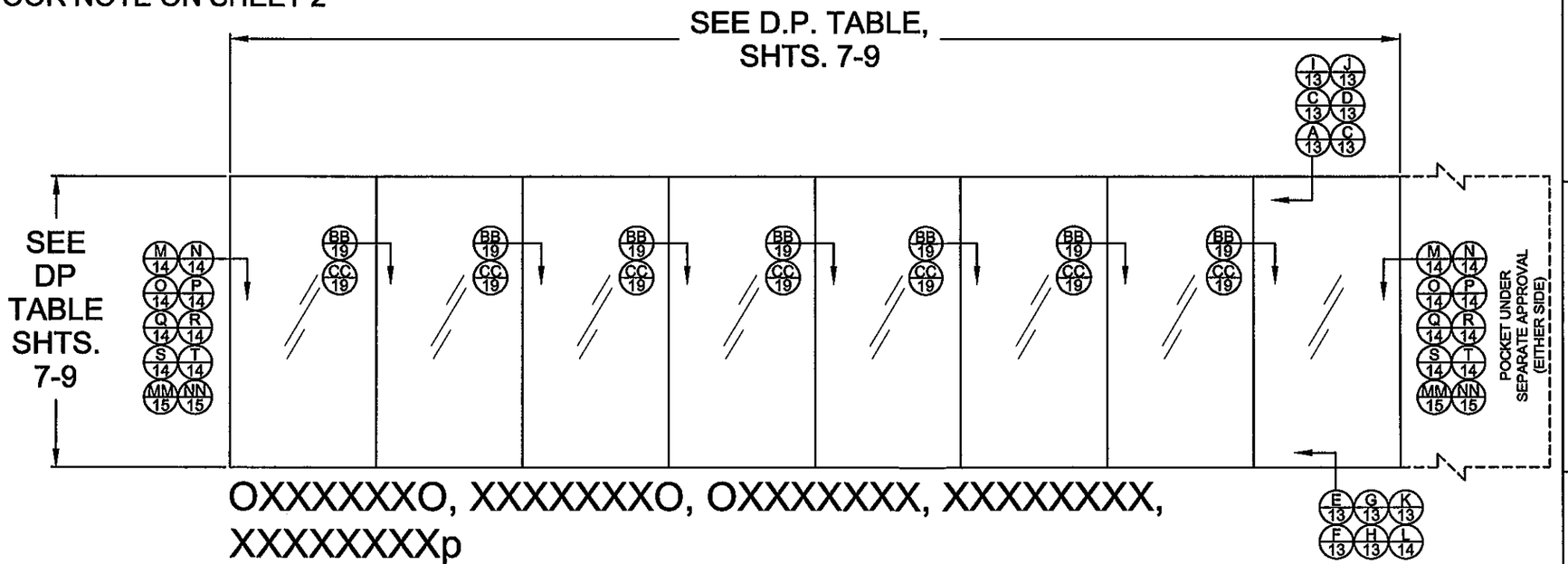

OXXXXXXO, XXXXXXXO, OXXXXXXX, XXXXXXXX, XXXXXXXXp

PRODUCT REVISED
as complying with the Florida Building Code
Acceptance No. 11-1018.14
Expiration Date 2/17/15
By Ishas J. Chanta
Miami Dade Product Control

Revsd By:	Date:	Revisions:	
J.J.	10/11/11	C	NO CHANGE THIS SHEET
SMC	01/05/10	B	PER MIAMI DADE COMMENTS
SMC	11/16/09	A	PER MIAMI DADE COMMENTS
Drawn By: SMC	Date: 08/05/09	Checked By:	Date:

1070 TECHNOLOGY DRIVE
NOKOMIS, FL 34275

P.O. BOX 1529
NOKOMIS, FL 34274

PGT®

Description: QUALIFIED CONFIGURATIONS

Title: SERIES 770 ALUM. SGD - LMI

Series/Model:	Scale:	Sheet:	Drawing No.	Rev:
SGD770	NTS	4 of 23	PGT0002	C

ANTHONY LYNN MILLER
LICENSE
No. 58705
STATE OF FLORIDA
PROFESSIONAL ENGINEER
10/11/11

A. LYNN MILLER, P.E.
P.E.# 58705

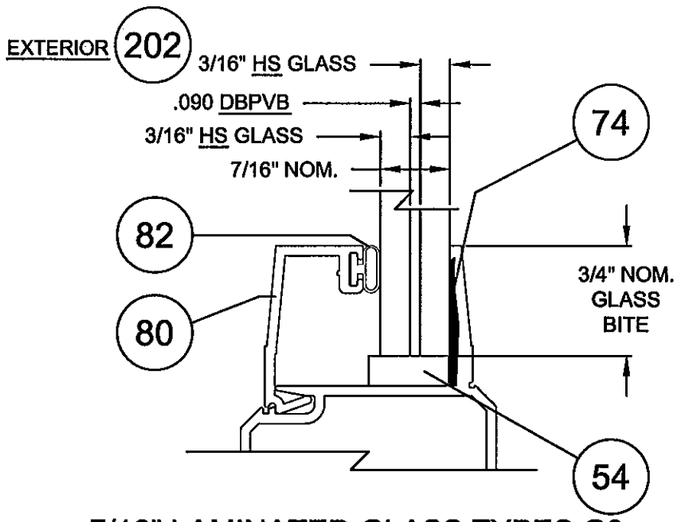

7/16" LAMINATED GLASS TYPES G3

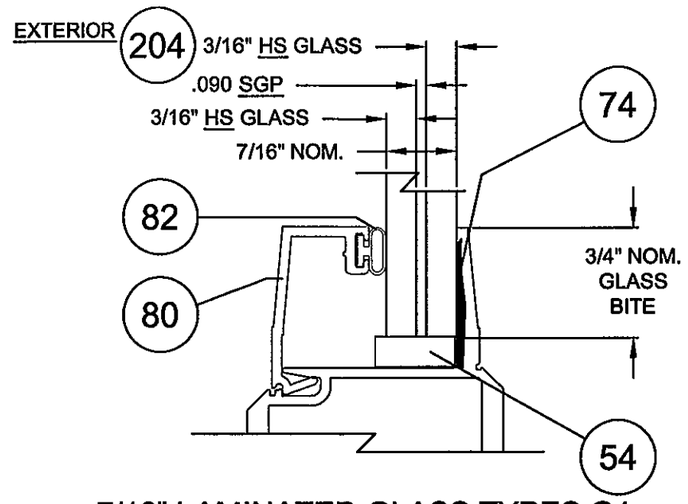

7/16" LAMINATED GLASS TYPES G4

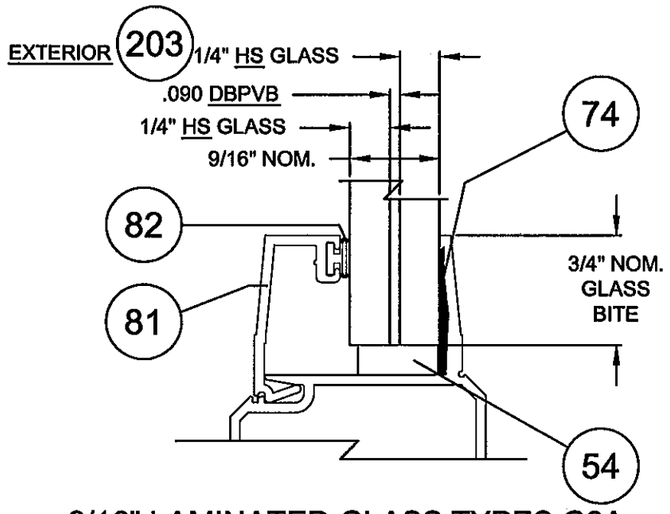

9/16" LAMINATED GLASS TYPES G3A

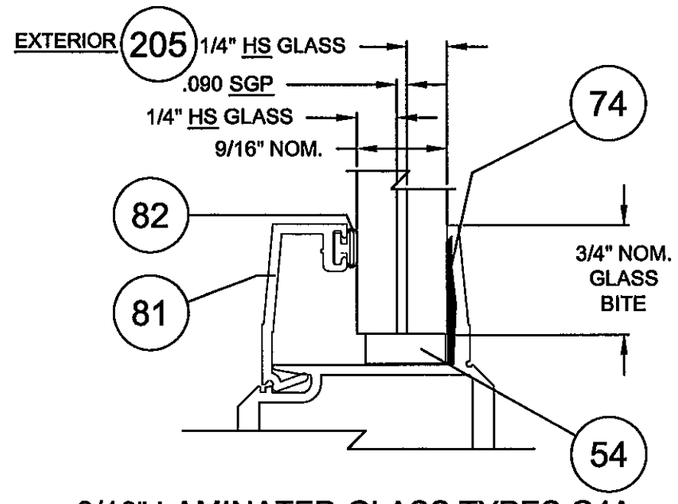

9/16" LAMINATED GLASS TYPES G4A

PRODUCT REVISED
as complying with the Florida
Building Code
Acceptance No. 11-1018.14
Expiration Date 2/17/15
By Ishang L. Chanda
Miami-Dade Product Control

Revsd By:	Date:	Revisions:	
J.J.	10/11/11	C	NO CHANGE THIS SHEET
Revsd By:	Date:	Revisions:	
Revsd By:	Date:	Revisions:	
SMC	11/16/09	A	PER MIAMI DADE COMMENTS
Drawn By:	Date:	Checked By:	Date:
SMC	08/05/09		

1070 TECHNOLOGY DRIVE
NOKOMIS, FL 34275

P.O. BOX 1529
NOKOMIS, FL 34274

PGT®

Description:
GLAZING DETAILS

Title:
SERIES 770 ALUMINUM SGD - LMI

Series/Model:	Scale:	Sheet:	Drawing No.	Rev:
SGD770	NTS	5 of 23	PGT0002	C

ANTHONY LYNN MILLER
LICENSE
No. 58705
STATE OF FLORIDA
PROFESSIONAL ENGINEER
10/11/11

A. LYNN MILLER, P.E.
P.E.# 58705

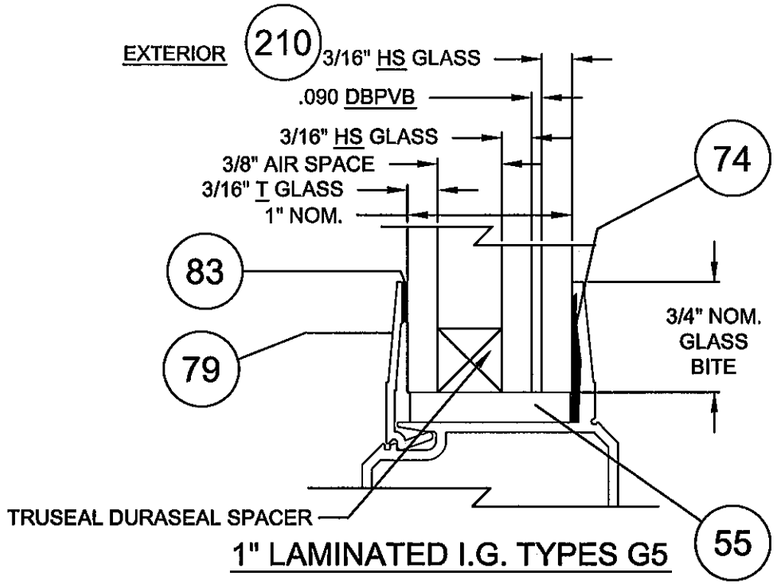

1" LAMINATED I.G. TYPES G5

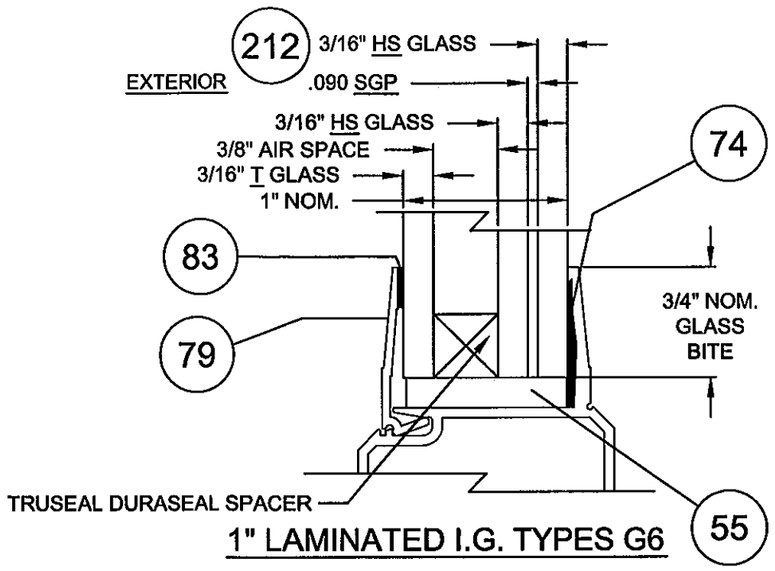

1" LAMINATED I.G. TYPES G6

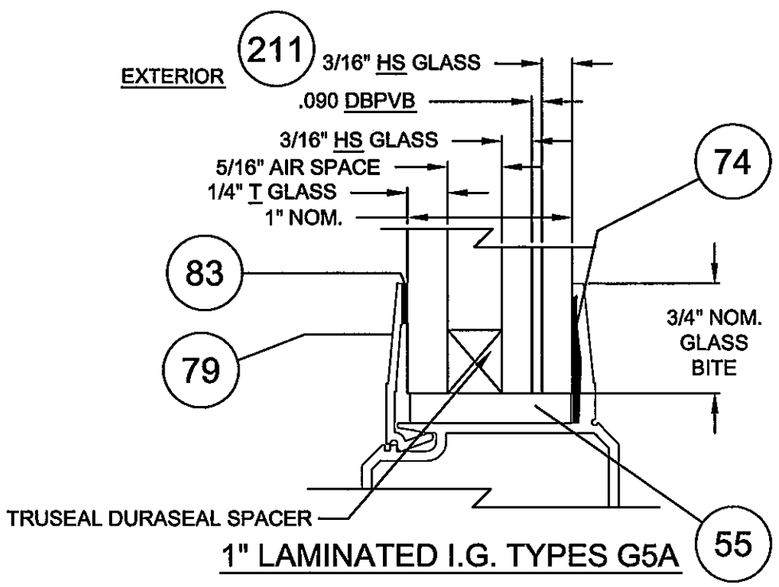

1" LAMINATED I.G. TYPES G5A

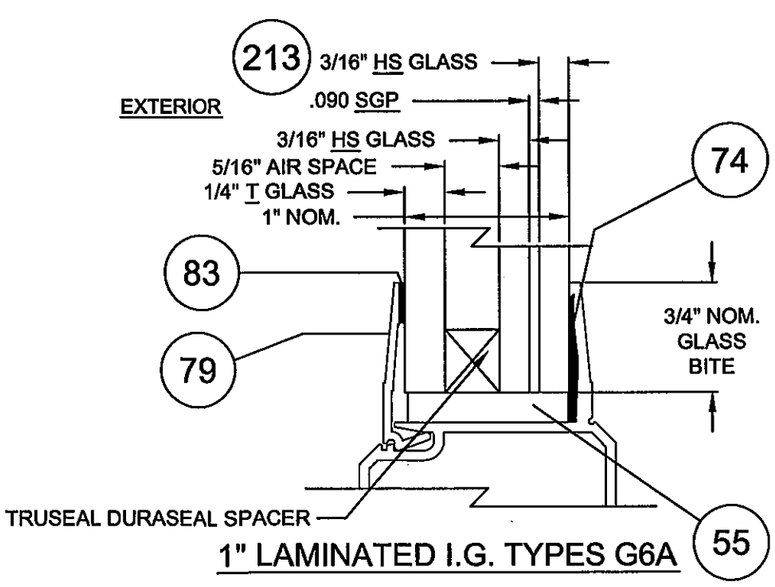

1" LAMINATED I.G. TYPES G6A

PRODUCT REVISED
as complying with the Florida
Building Code
Acceptance No 11-1018.14
Expiration Date 2/17/15
By Ishaq I. Chand
Miami-Dade Product Control

Revsd By:	Date:	Revisions:	
J.J.	10/11/11	C	NO CHANGE THIS SHEET
Revsd By:	Date:	Revisions:	
Revsd By:	Date:	Revisions:	
SMC	11/16/09	A	PER MIAMI DADE COMMENTS
Drawn By:	Date:	Checked By:	Date:
SMC	08/05/09	RJA	

1070 TECHNOLOGY DRIVE
NOKOMIS, FL 34275

P.O. BOX 1529
NOKOMIS, FL 34274

PGT®

Description: GLAZING DETAILS

Title: SERIES 770 ALUMINUM SGD - LMI

Series/Model:	Scale:	Sheet:	Drawing No.	Rev:
SGD770	NTS	6 of 23	PGT0002	C

ANTHONY LYNN MILLER
LICENSE
No. 58705
STATE OF FLORIDA
PROFESSIONAL ENGINEER
10/11/11

A. LYNN MILLER, P.E.
P.E.# 58705

DESIGN PRESSURE AND ANCHORAGE - UN-REINFORCED - STANDARD STILE - STANDARD ASTRAGAL — TABLE 1.

> HEAD & SILL (H&S) INTERLOCK, STRAIGHT & CORNER ASTRAGAL CLUSTER PLUS INTERMEDIATE ANCHOR QTY. PER PANEL H & S,
> JAMB ANCHOR QTY. >P-HOOK ANCHOR QTY.

G3 - 7/16" LAMINATED GLASS - (3/16" H.S. / PVB / 3/16" H.S.)
G3A - 9/16" LAMINATED GLASS - (1/4" H.S. / PVB / 1/4" H.S.)
G5 - 7/16" LAMINATED I.G.U. - (3/16" TEMP. / AIR / 3/16" H.S. / PVB / 3/16" H.S.)
G5A - 7/16" LAMINATED I.G.U. - (1/4" TEMP. / AIR / 3/16" H.S. / PVB / 3/16" H.S.)

Anchor Types:
1) *1/4" ELCO ULTRACON (FORMERLY TAPCON
2) *1/4" SS4 CRETE-FLEX
3) *5/16" ULTRACON
4) *#12 STEEL SCREW (G5)

* SEE ANCHORAGE NOTES 1 & 2 ON SHEET 1.

NOM. PANEL WIDTH		FRAME SIDE	UNIT HEIGHT 80			84			90			96		
			1,2 - CONC	3 - CONC	2,4 - WOOD	1,2 - CONC	3 - CONC	2,4 - WOOD	1,2 - CONC	3 - CONC	2,4 - WOOD	1,2 - CONC	3 - CONC	2,4 - WOOD
GLASS TYPE - 3, 3A, 5, 5A			+60	-60.0		+60	-60.0		+60	-60.0		+60	-60.0	
24	Anchors	H&S	C4+1	C4+1	C4+2	C4+1	C4+1	C4+2	C4+1	C4+1	C4+2	C4+1	C4+1	C4+2
		JAMB	10	10	10	10	10	10	10	10	10	10	10	10
		P-HOOK	5	5	5	5	5	5	5	5	5	5	5	5
GLASS TYPE - 3, 3A, 5, 5A			+60	-60.0		+60	-60.0		+60	-60.0		+60	-60.0	
30	Anchors	H&S	C4+1	C4+1	C4+2	C4+1	C4+1	C4+2	C4+1	C4+1	C4+2	C4+1	C4+1	C4+2
		JAMB	10	10	10	10	10	10	10	10	10	10	10	10
		P-HOOK	5	5	5	5	5	5	5	5	5	5	5	5
GLASS TYPE - 3, 3A, 5, 5A			+60	-60.0		+60	-60.0		+60	-60.0		+60	-60.0	
36	Anchors	H&S	C4+1	C4+1	C4+2	C4+1	C4+1	C4+2	C4+1	C4+1	C4+2	C4+1	C4+1	C4+2
		JAMB	10	10	10	10	10	10	10	10	10	10	10	10
		P-HOOK	5	5	5	5	5	5	5	5	5	5	5	6
GLASS TYPE - 3, 3A, 5, 5A			+60	-60.0		+60	-60.0		+60	-60.0		+60	-60.0	
42	Anchors	H&S	C4+1	C4+1	C4+2	C4+1	C4+1	C4+2	C4+1	C4+1	C4+2	C4+1	C4+1	C4+2
		JAMB	10	10	10	10	10	10	10	10	10	10	10	10
		P-HOOK	5	5	5	5	5	5	6	6	6	6	6	6
GLASS TYPE - 3, 3A, 5, 5A			+60	-60.0		+60	-60.0		+60	-60.0		+60	-60.0	
48	Anchors	H&S	C4+1	C4+1	C4+2	C4+1	C4+1	C4+2	C4+1	C4+1	C4+2	C4+1	C4+1	C4+2
		JAMB	10	10	10	10	10	10	10	10	10	10	10	10
		P-HOOK	5	5	5	6	6	6	6	6	6	7	7	7

1. POSITIVE PRESSURES IN TABLE ARE BASED ON THE USE OF THE 3 1/4 SILL.
2. WHEN USING THE 2 1/2" SILL, POSITIVE WATER DP IS 46.67 PSF MAX. WHEN USING THE 4" SILL POSITIVE WATER DP IS 60.0 PSF MAX. (NEGATIVE PRESSURES UNCHANGED). SEE TABLE 1A.
3. 4", 3 1/4" AND 2 1/2" SILL HEIGHTS ARE TESTED FOR WATER INFILTRATION WHEREAS THE 1 1/2" SILL IS NOT AND MUST ONLY BE USED WHERE WATER RESISTANCE IS NOT REQUIRED. POSITIVE DESIGN PRESSURES SHOWN IN TABLE 1 MAY BE USED WHEN THE DOOR IS PROTECTED BY AN OVERHANG COMPLYING WITH THE FLORIDA BUILDING CODE (SEE ADJACENT DIAGRAM); THIS CONDITION IS NOT RATED FOR WATER INFILTRATION.
4. SEE SHEETS 10 THROUGH 15 FOR ANCHORAGE SPACING AND EMBEDMENT INFORMATION.
5. DOOR SIZE TO COMPLY WITH FBC EGRESS REQUIREMENTS.

(oval) = EXAMPLE ON SHEET 10

TABLE 1A.	
SILL HT. VS POS. DP	
SILL RISE HEIGHT	(+) DESIGN LOAD
FLUSH 1-1/2"	N/A
LOW 2-1/2"	+ 46.67 PSF
MED 3-1/4"	+ 60.0 PSF
HIGH 4"	+ 60.0 PSF
SEE NOTES 1-3	

DLO WIDTH = NOM. PANEL WIDTH - 7" DLO HEIGHT = NOM. PANEL HEIGHT - 8.25"

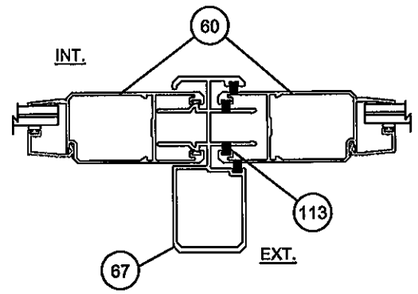

STANDARD ASTRAGAL
STANDARD STILES

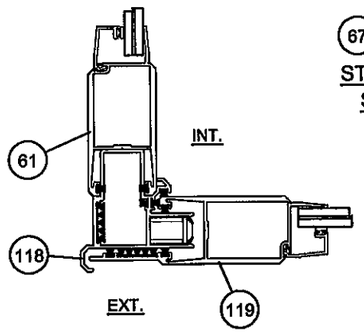

90° OUTSIDE CORNER

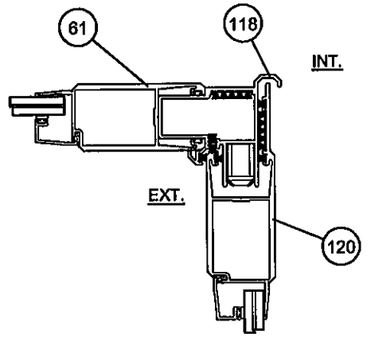

90° INSIDE CORNER

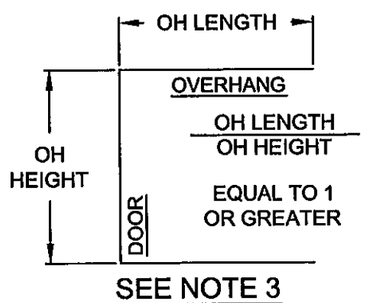

SEE NOTE 3

PRODUCT REVISED
as complying with the Florida Building Code
Acceptance No. 11-1018.14
Expiration Date 2/17/15
Method Used: Product Approval

ANTHONY LYNN MILLER
LICENSE
No. 58705
STATE OF FLORIDA
PROFESSIONAL ENGINEER
10/11/11
A. LYNN MILLER, P.E.
P.E.# 58705

Revsd By:	Date:	Revisions:	
J.J.	10/11/11	C	NO CHANGE THIS SHEET
SMC	01/05/10	B	PER MIAMI DADE COMMENTS
SMC	11/16/09	A	PER MIAMI DADE COMMENTS
Drawn By: SMC	Date: 08/05/09	Checked By:	Date:

1070 TECHNOLOGY DRIVE
NOKOMIS, FL 34275
P.O. BOX 1529
NOKOMIS, FL 34274

Description: DP AND ANCHORAGE
Title: SERIES 770 ALUMINUM SGD - LMI
Series/Model: SGD770 | Scale: NTS | Sheet: 7 of 23 | Drawing No. PGT0002 | Rev: C

DESIGN PRESSURE AND ANCHORAGE - UN-REINFORCED - HEAVY DUTY STILE - STANDARD ASTRAGAL

TABLE 2.

> HEAD & SILL (H&S) INTERLOCK & STRAIGHT & CORNER ASTRAGAL CLUSTER PLUS INTERMEDIATE ANCHOR QTY. PER PANEL H & S,

> JAMB ANCHOR QTY. >P-HOOK ANCHOR QTY.

G4 - 7/16" LAMINATED GLASS - (3/16" H.S. / SGP / 3/16" H.S.)
G4A - 9/16" LAMINATED GLASS - (1/4" H.S. / SGP / 1/4" H.S.)
G6 - 7/16" LAMINATED I.G.U. - (3/16" TEMP. / AIR / 3/16" H.S. / SGP / 3/16" H.S.)
G6A - 7/16" LAMINATED I.G.U. - (1/4" TEMP. / AIR / 3/16" H.S. / SGP / 3/16" H.S.)

Anchor Types:
1) *1/4" ELCO ULTRACON (FORMERLY TAPCON
2) *1/4" SS4 CRETE-FLEX
3) *5/16" ULTRACON
4) *#12 STEEL SCREW (G5)
* SEE ANCHORAGE NOTES 1 & 2 ON SHEET 1.

NOM. PANEL WIDTH		FRAME SIDE	UNIT HEIGHT 80			84			90			96			102			108			114			120		
			1,2 - CONC	3 - CONC	2,4 - WOOD	1,2 - CONC	3 - CONC	2,4 - WOOD	1,2 - CONC	3 - CONC	2,4 - WOOD	1,2 - CONC	3 - CONC	2,4 - WOOD	1,2 - CONC	3 - CONC	2,4 - WOOD	1,2 - CONC	3 - CONC	2,4 - WOOD	1,2 - CONC	3 - CONC	2,4 - WOOD	1,2 - CONC	3 - CONC	2,4 - WOOD
GLASS TYPE - 4, 4A, 6, 6A			60.0	-60.0		60.0	-60.0		60.0	-60.0		60.0	-60.0		60.0	-60.0		60.0	-60.0		60.0	-60.0		60.0	-60.0	
24	Anchors	H&S	C4+1	C4+1	C6+2	C4+1	C4+1	C6+2	C4+1	C4+1	C6+2	C4+1	C4+1	C6+2	C4+1	C4+1	C6+2	C4+1	C4+1	C6+2	C4+1	C4+1	C6+2	C4+1	C4+1	C6+2
		JAMB	10	10	10	10	10	10	10	10	10	10	10	10	12	12	12	12	12	12	12	12	12	12	12	12
		P-HOOK	5	5	5	5	5	5	5	5	5	5	5	5	6	6	6	6	6	6	6	6	6	6	6	6
GLASS TYPE - 4, 4A, 6, 6A			60.0	-60.0		60.0	-60.0		60.0	-60.0		60.0	-60.0		60.0	-60.0		60.0	-60.0		60.0	-60.0		60.0	-60.0	
30	Anchors	H&S	C4+1	C4+1	C6+2	C4+1	C4+1	C6+2	C4+1	C4+1	C6+2	C4+1	C4+1	C6+2	C4+1	C4+1	C6+2	C4+1	C4+1	C6+2	C4+1	C4+1	C6+2	C4+1	C4+1	C6+2
		JAMB	10	10	10	10	10	10	10	10	10	10	10	10	12	12	12	12	12	12	12	12	12	12	12	12
		P-HOOK	5	5	5	5	5	5	5	5	5	5	5	5	6	6	6	6	6	6	6	6	6	6	6	6
GLASS TYPE - 4, 4A, 6, 6A			60.0	-60.0		60.0	-60.0		60.0	-60.0		60.0	-60.0		60.0	-60.0		60.0	-60.0		60.0	-60.0		60.0	-60.0	
36	Anchors	H&S	C4+1	C4+1	C6+2	C4+1	C4+1	C6+2	C4+1	C4+1	C6+2	C4+1	C4+1	C6+2	C4+1	C4+1	C6+2	C4+1	C4+1	C6+2	C4+1	C4+1	C6+2	C4+1	C4+1	C6+2
		JAMB	10	10	10	10	10	10	10	10	10	10	10	10	12	12	12	12	12	12	12	12	12	12	12	12
		P-HOOK	5	5	5	5	5	5	5	5	6	5	5	6	6	6	6	6	6	6	7	7	7	7	7	7
GLASS TYPE - 4, 4A, 6, 6A			60.0	-60.0		60.0	-60.0		60.0	-60.0		60.0	-60.0		60.0	-60.0		60.0	-60.0		60.0	-60.0		60.0	-60.0	
42	Anchors	H&S	C4+1	C4+1	C6+2	C4+1	C4+1	C6+2	C4+1	C4+1	C6+2	C4+1	C4+1	C6+2	C4+1	C4+1	C6+2	C4+1	C4+1	C6+2	C4+1	C4+1	C6+2	C4+1	C4+1	C6+2
		JAMB	10	10	10	10	10	10	10	10	10	10	10	10	12	12	12	12	12	12	12	12	12	12	12	12
		P-HOOK	5	5	5	5	5	5	6	6	6	6	6	6	6	6	7	7	7	7	7	7	8	8	8	8
GLASS TYPE - 4, 4A, 6, 6A			60.0	-60.0		60.0	-60.0		60.0	-60.0		60.0	-60.0		60.0	-60.0		60.0	-60.0		60.0	-60.0		60.0	-60.0	
48	Anchors	H&S	C4+1	C4+1	C6+2	C4+1	C4+1	C6+2	C4+1	C4+1	C6+2	C4+1	C4+1	C6+2	C4+1	C4+1	C6+2	C4+1	C4+1	C6+2	C4+1	C4+1	C6+2	C4+1	C4+1	C6+2
		JAMB	10	10	10	10	10	10	10	10	10	10	10	10	12	12	12	12	12	12	12	12	12	12	12	12
		P-HOOK	5	5	5	6	6	6	6	6	6	7	7	7	7	7	7	8	8	8	8	8	8	9	9	9
GLASS TYPE - 4, 4A, 6, 6A			60.0	-60.0		60.0	-60.0		60.0	-60.0		60.0	-60.0													
54	Anchors	H&S	C4+2	C4+2	C5+2	C4+2	C4+2	C5+2	C4+2	C4+2	C5+2	C4+2	C4+2	C5+2												
		JAMB	10	10	10	10	10	10	10	10	10	10	10	10												
		P-HOOK	6	6	6	6	6	6	6	6	7	7	7	7												
GLASS TYPE - 4, 4A, 6, 6A			60.0	-60.0		60.0	-60.0		60.0	-60.0		60.0	-60.0													
60	Anchors	H&S	C4+2	C4+2	C5+2	C4+2	C4+2	C5+2	C4+2	C4+2	C5+2	C4+2	C4+2	C5+2												
		JAMB	10	10	10	10	10	10	10	10	10	10	10	10												
		P-HOOK	6	6	6	6	6	6	7	7	7	7	7	8												

PANELS OVER 48" WIDE NOT AVAILABLE OVER 96" HIGH

1. POSITIVE PRESSURES IN TABLE ARE BASED ON THE USE OF THE 3 1/4" SILL.
2. WHEN USING THE 2 1/2" SILL, POSITIVE DP IS 46.67 PSF MAX. WHEN USING THE 4" SILL POSITIVE DP IS 60.0 MAX.
   (NEGATIVE PRESSURES UNCHANGED). SEE TABLE 2A.
3. 2 1/2", 3 1/4" AND 4" SILL HEIGHTS ARE TESTED FOR WATER INFILTRATION WHEREAS THE 1 1/2" SILL IS NOT AND MUST ONLY
   BE USED WHERE WATER RESISTANCE IS NOT REQUIRED. POSITIVE DESIGN PRESSURES SHOWN IN TABLE 2 MAY BE USED
   WHEN THE DOOR IS PROTECTED BY AN OVERHANG COMPLYING WITH THE FLORIDA BUILDING CODE (SEE ADJACENT DIAGRAM);
   THIS CONDITION IS NOT RATED FOR WATER INFILTRATION.
4. SEE SHEETS 10 THROUGH 15 FOR ANCHORAGE SPACING AND EMBEDMENT INFORMATION.
5. DOOR SIZE TO COMPLY WITH FBC EGRESS REQUIREMENTS.

( ) = EXAMPLE ON SHEET 10

TABLE 2A.	
SILL HT. VS POS. DP	
SILL RISE HEIGHT	(+) DESIGN LOAD
FLUSH - 1-1/2"	N/A
LOW - 2-1/2"	+ 46.67 PSF
MED - 3-1/4"	+ 60.0 PSF
HIGH - 4"	+ 60.0 PSF
SEE NOTES 1-3	

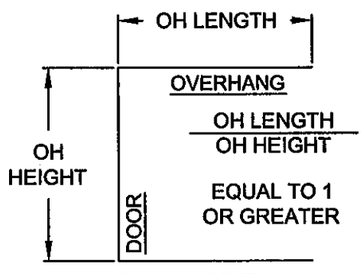

SEE NOTE 3

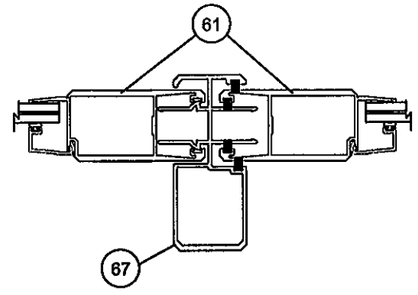

STANDARD ASTRAGAL
HEAVY DUTY STILES

SEE SHEET 7 OR 9 FOR 90°
INSIDE & OUTSIDE CORNER DEPICTION

DLO WIDTH = NOM. PANEL WIDTH - 7"
DLO HEIGHT = NOM. PANEL HEIGHT - 8.25"

PRODUCT REVISED
as complying with the Florida Building Code
Anthyscreen No. 11-1018.14
Expiration Date: 2/17/2015
By: Ishaq I. Chanda
Miami-Dade Product Control

ANTHONY LYNN MILLER LICENSE No. 58705 10/11/11 STATE OF FLORIDA PROFESSIONAL ENGINEER
A. LYNN MILLER, P.E.
P.E.# 58705

Revsd By:	Date:	Revisions:	
J.J.	10/11/11	C	NO CHANGE THIS SHEET
SMC	01/05/10	B	PER MIAMI DADE COMMENTS
SMC	11/16/09	A	PER MIAMI DADE COMMENTS
Drawn By: SMC	Date: 08/05/09	Checked By:	Date:

1070 TECHNOLOGY DRIVE
NOKOMIS, FL 34275
P.O. BOX 1529
NOKOMIS, FL 34274

PGT®

Description: DP AND ANCHORAGE
Title: SERIES 770 ALUMINUM SGD - LMI

Series/Model:	Scale:	Sheet:	Drawing No.	Rev:
SGD770	NTS	8 of 23	PGT0002	C

DESIGN PRESSURE AND ANCHORAGE - UN-REINFORCED - HEAVY DUTY STILE - HEAVY DUTY ASTRAGAL

TABLE 3.

> HEAD & SILL (H&S) INTERLOCK, STRAIGHT & CORNER ASTRAGAL CLUSTER PLUS INTERMEDIATE ANCHOR QTY. PER PANEL H & S,
> JAMB ANCHOR QTY. >P-HOOK ANCHOR QTY.

G4 - 7/16" LAMINATED GLASS - (3/16" H.S. / SGP / 3/16" H.S.)
G4A - 9/16" LAMINATED GLASS - (1/4" H.S. / SGP / 1/4" H.S.)
G6 - 7/16" LAMINATED I.G.U. - (3/16" TEMP. / AIR / 3/16" H.S. / SGP / 3/16" H.S.)
G6A - 7/16" LAMINATED I.G.U. - (1/4" TEMP. / AIR / 3/16" H.S. / SGP / 3/16" H.S.)

Anchor Types:
1) *1/4" ELCO ULTRACON (FORMERLY TAPCON)
2) *1/4" SS4 CRETE-FLEX
3) *5/16" ULTRACON
4) *#12 STEEL SCREW (G5)
* SEE ANCHORAGE NOTES 1 & 2 ON SHEET 1.

NOM. PANEL WIDTH	FRAME SIDE		UNIT HEIGHT 80			84			90			96		
			1, 2 - CONC	3 - CONC	2, 4 - WOOD	1, 2 - CONC	3 - CONC	2, 4 - WOOD	1, 2 - CONC	3 - CONC	2, 4 - WOOD	1, 2 - CONC	3 - CONC	2, 4 - WOOD
GLASS TYPE - 4, 4A, 6, 6A			90.0	-90.0		90.0	-90.0		90.0	-90.0		90.0	-90.0	
24	Anchors	H&S	C6+2	C6+2	C6+2	C6+2	C6+2	C6+2	C6+2	C6+2	C6+2	C6+2	C6+2	C6+2
		JAMB	10	10	10	10	10	10	10	10	10	10	10	10
		P-HOOK	5	5	5	5	5	5	5	5	6	6	6	6
GLASS TYPE - 4, 4A, 6, 6A			90.0	-90.0		90.0	-90.0		90.0	-90.0		90.0	-90.0	
30	Anchors	H&S	C6+2	C6+2	C6+2	C6+2	C6+2	C6+2	C6+2	C6+2	C6+2	C6+2	C6+2	C6+2
		JAMB	10	10	10	10	10	10	10	10	10	10	10	10
		P-HOOK	6	6	6	6	6	6	6	6	7	7	7	7
GLASS TYPE - 4, 4A, 6, 6A			90.0	-90.0		90.0	-90.0		90.0	-90.0		90.0	-90.0	
36	Anchors	H&S	C6+2	C6+2	C6+2	C6+2	C6+2	C6+2	C6+2	C6+2	C6+2	C6+2	C6+2	C6+2
		JAMB	10	10	10	10	10	10	10	10	10	10	10	10
		P-HOOK	6	6	7	7	7	7	7	7	8	8	8	8
GLASS TYPE - 4, 4A, 6, 6A			90.0	-90.0		90.0	-90.0		90.0	-90.0		90.0	-90.0	
42	Anchors	H&S	C6+2	C6+2	C6+2	C6+2	C6+2	C6+2	C6+2	C6+2	C6+2	C6+2	C6+2	C6+2
		JAMB	10	10	10	10	10	10	10	10	10	10	10	10
		P-HOOK	7	7	7	7	7	8	8	8	8	9	9	9
GLASS TYPE - 4, 4A, 6, 6A			90.0	-90.0		90.0	-90.0		90.0	-90.0		90.0	-90.0	
48	Anchors	H&S	C6+2	C6+2	C6+2	C6+2	C6+2	C6+2	C6+2	C6+2	C6+2	C6+2	C6+2	C6+2
		JAMB	10	10	10	10	10	10	10	10	10	10	10	10
		P-HOOK	8	8	8	8	8	8	9	9	9	10	10	10

1. POSITIVE PRESSURES IN TABLE ARE BASED ON THE USE OF THE 4" SILL.
2. WHEN USING THE 2 1/2" SILL, POSITIVE DP IS 46.67 PSF MAX. AND WITH THE 3 1/4" SILL, POSITIVE PRESSURES IS 60.0 PSF MAX.
   (NEGATIVE PRESSURES UNCHANGED). SEE TABLE 3A.
3. 2 1/2", 3 1/4", AND 4" SILL HEIGHTS ARE TESTED FOR WATER INFILTRATION WHEREAS THE 1 1/2" SILL IS NOT AND MUST ONLY
   BE USED WHERE WATER RESISTANCE IS NOT REQUIRED. POSITIVE DESIGN PRESSURES SHOWN IN TABLE 3 MAY BE USED
   WHEN THE DOOR IS PROTECTED BY AN OVERHANG COMPLYING WITH THE FLORIDA BUILDING CODE (SEE ADJACENT DIAGRAM);
   THIS CONDITION IS NOT RATED FOR WATER INFILTRATION.
4. SEE SHEETS 10 THROUGH 15 FOR ANCHORAGE SPACING AND EMBEDMENT INFORMATION.
5. DOOR SIZE TO COMPLY WITH FBC EGRESS REQUIREMENTS.

TABLE 3A.	
SILL HT. VS POS. DP	
SILL RISE HEIGHT	(+) DESIGN LOAD
FLUSH - 1-1/2"	N/A
LOW - 2-1/2"	+ 46.67 PSF
MED - 3-1/4"	+ 60.0 PSF
HIGH - 4"	+ 90.0 PSF
SEE NOTES 1-3	

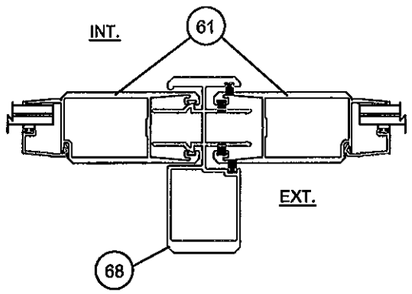

HEAVY DUTY ASTRAGAL
HEAVY DUTY STILES

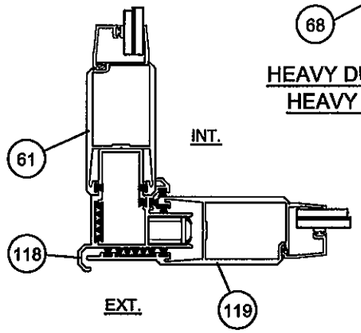

90° OUTSIDE CORNER

DLO WIDTH = NOM. PANEL WIDTH - 7"
DLO HEIGHT = NOM. PANEL HEIGHT - 8.25"

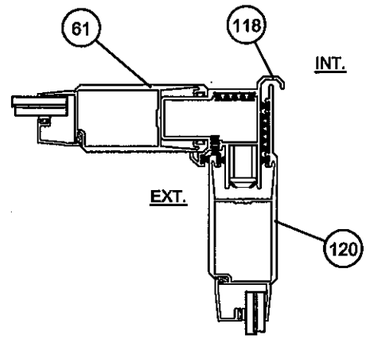

90° INSIDE CORNER

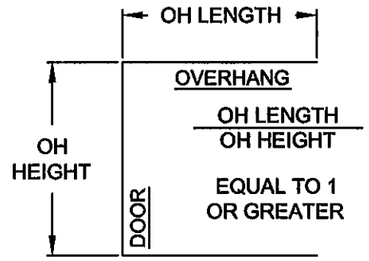

SEE NOTE 3

PRODUCT REVISED
as complying with the Florida Building Code
Acceptance No. 11-1018.14
Expiration Date 2/17/2015
By Ishaq I. Chanda
Miami Dade Product Control

Revsd By:	Date:	Revisions:	
J.J.	10/11/11	C	NO CHANGE THIS SHEET
SMC	01/05/10	B	PER MIAMI DADE COMMENTS
SMC	11/16/09	A	PER MIAMI DADE COMMENTS
Drawn By: SMC	Date: 08/05/09	Checked By:	Date:

1070 TECHNOLOGY DRIVE
NOKOMIS, FL 34275
P.O. BOX 1529
NOKOMIS, FL 34274

PGT®

Description: DP AND ANCHORAGE
Title: SERIES 770 ALUMINUM SGD - LMI

Series/Model:	Scale:	Sheet:	Drawing No.	Rev:
SGD770	NTS	9 of 23	PGT0002	C

ANTHONY LYNN MILLER
LICENSE
No. 58705
STATE OF FLORIDA
PROFESSIONAL ENGINEER
10/11/11
A. LYNN MILLER, P.E.
P.E.# 58705

ANCHORAGE REQUIREMENTS NOTES:

1. APPROVED ANCHOR TYPES: 1) 1/4" ELCO ULTRACON (FORMERLY TAPCON) 2) 1/4" ELCO SS4 CRETE-FLEX 3) 5/16" ULTRACON 4) #12 STEEL SCREW (G5)
2. ANCHOR LOCATION SPACING FOR ANCHOR QUANTITIES SPECIFIED IN TABLES 1-3, SHTS. 7-9:

HEAD & SILL..... 8" MAX. FROM FRAME CORNERS. USE SPECIFIED CLUSTER FROM APPROPRIATE TABLES, SHTS. 7-9 AT EACH INTERLOCK AND STRAIGHT AND CORNER ASTRAGAL LOCATION, PLUS SPECIFIED QUANTITY OF ADDITIONAL INTERMEDIATE ANCHORS PER PANEL (THE 8" FROM CORNER ANCHORS CAN BE INCLUDED). ADDITIONAL ANCHORS 24" MAX. O.C. SEE EXAMPLE ANCHORAGE PLANS BELOW AND EXAMPLE CLUSTERS AT ASTRAGAL, INTERLOCK & 90° CORNER ON SHT. 11-12.

JAMBS & P-HOOKS... 6" MAX. FROM BOTTOM AND 21" MAX. O.C. UTILIZING ANCHOR QUANTITIES FROM APPROPRIATE TABLES, SHTS. 7-9. SEE P-HOOK ANCHOR DETAILS ON SHEETS 14-15.

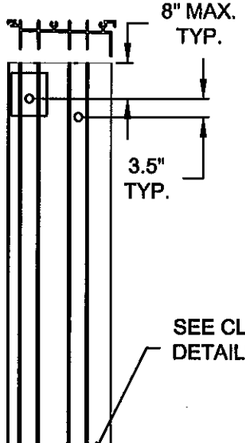

"ANCHORS PER PANEL" ARE THOSE AT THE HEAD AND SILL BETWEEN CLUSTERS OR THOSE BETWEEN A CLUSTER AND A FRAME JAMB OR P-HOOK.

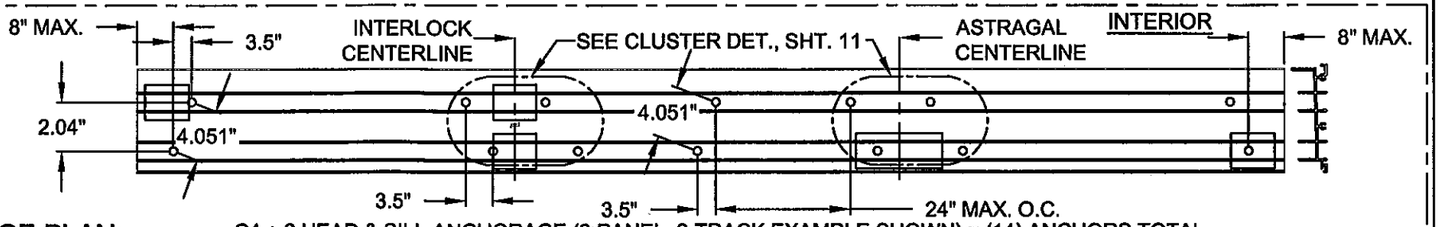

C4 + 2 HEAD & SILL ANCHORAGE (3 PANEL, 2-TRACK EXAMPLE SHOWN) = (14) ANCHORS TOTAL

EXAMPLE OXX ANCHORAGE PLAN:

(3) PANEL, 48" x 96" DOOR FROM TABLE 1, SHT. 7, ANCHOR TYPES 2 & 4 IN WOOD SUBSTRATE

EXTERIOR

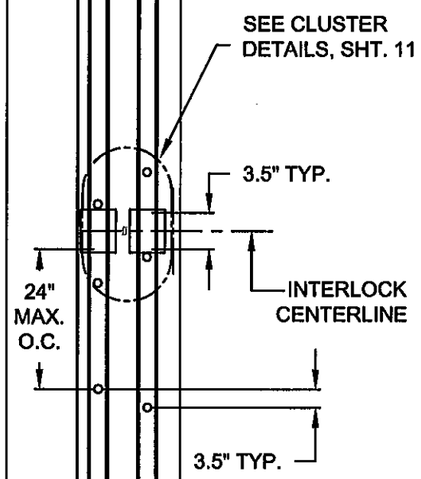

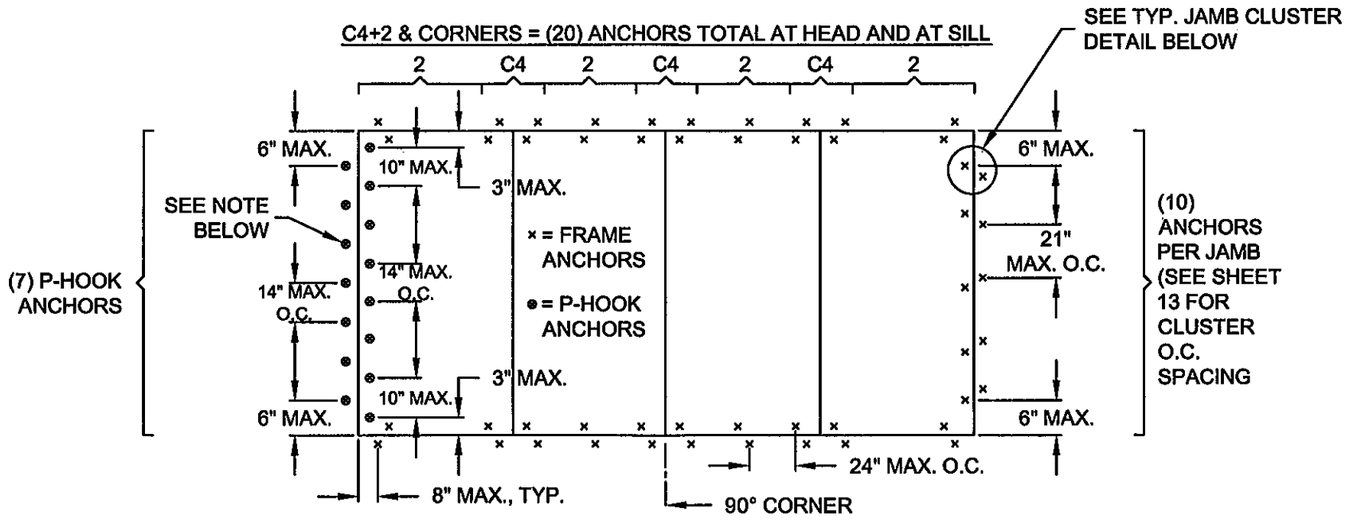

EXAMPLE OX-90° OUTSIDE CORNER-XO CORNER ANCHORAGE PLAN:

(4) PANEL, 60" x 96" DOOR FROM TABLE 2, SHT. 8, ANCHOR TYPE 1 & 2 IN CONCRETE SUBSTRATE

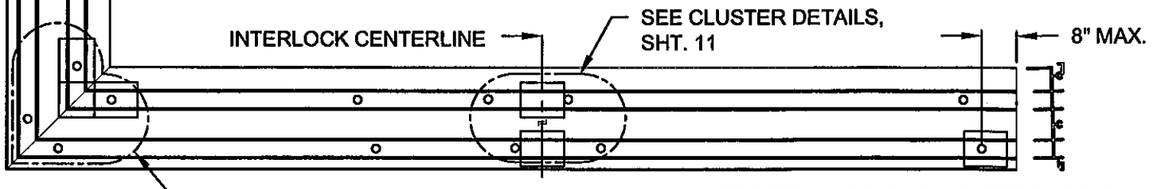

EXTERIOR

NOTE: SEE DETAILS S & T ON SHEET 14 & DETAILS MM & NN ON SHEET 15 FOR P-HOOK ANCHORS

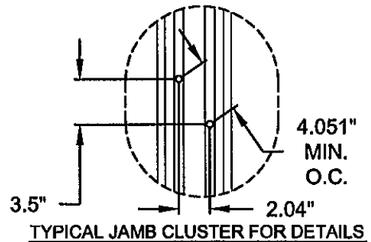

TYPICAL JAMB CLUSTER FOR DETAILS M, N, O, P, Q & R

PRODUCT REVISED as complying with the Florida Building Code
Acceptance No. 11-1018.14
Expiration Date 2/17/15
By Ishaq I. Lhamo
Miami Dade Product Control

Revsd By:	Date:	Revisions:	
J.J.	10/11/11	C	NO CHANGE THIS SHEET
SMC	01/05/10	B	PER MIAMI DADE COMMENTS
SMC	11/16/09	A	PER MIAMI DADE COMMENTS
Drawn By: SMC	Date: 08/05/09	Checked By: RJA	Date:

1070 TECHNOLOGY DRIVE
NOKOMIS, FL 34275
P.O. BOX 1529
NOKOMIS, FL 34274

PGT®

Description: ANCHORAGE SPACING & EXAMPLE PLANS
Title: SERIES 770 ALUMINUM SGD - LMI

Series/Model:	Scale:	Sheet:	Drawing No.	Rev:
SGD770	NTS	10 of 23	PGT0002	C

ANTHONY LYNN MILLER LICENSE No. 58705 STATE OF FLORIDA PROFESSIONAL ENGINEER
10/11/11
A. LYNN MILLER, P.E.
P.E.# 58705

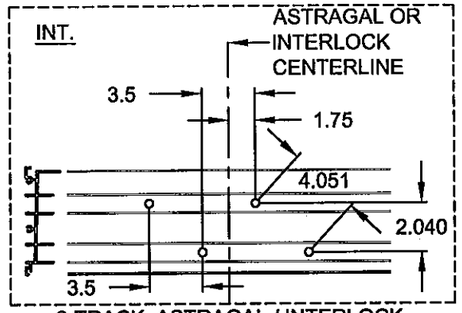

2-TRACK, ASTRAGAL / INTERLOCK
ANCHOR CLUSTER - C4

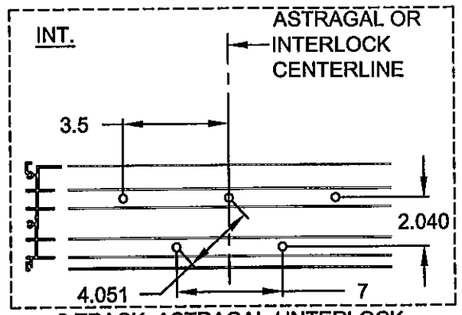

2-TRACK, ASTRAGAL / INTERLOCK
ANCHOR CLUSTER - C5

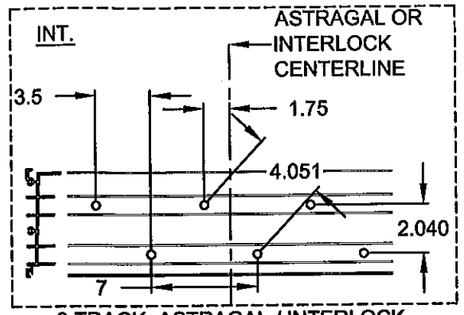

2-TRACK, ASTRAGAL / INTERLOCK
ANCHOR CLUSTER - C6

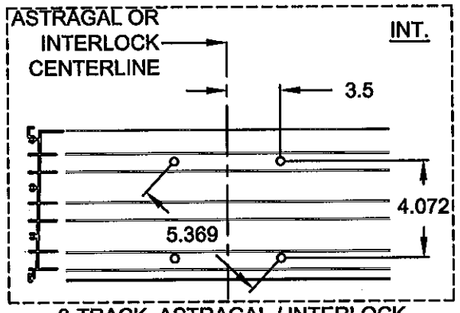

3-TRACK, ASTRAGAL / INTERLOCK
ANCHOR CLUSTER - C4

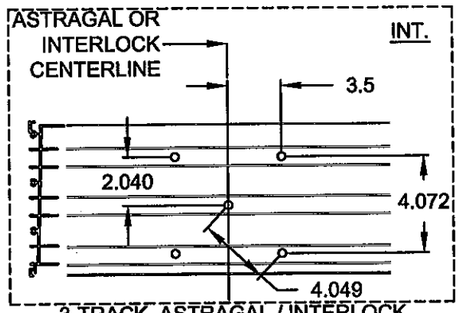

3-TRACK, ASTRAGAL / INTERLOCK
ANCHOR CLUSTER - C5

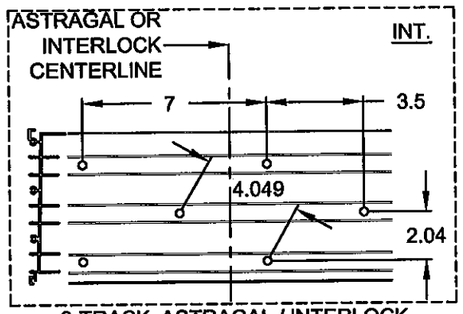

3-TRACK, ASTRAGAL / INTERLOCK
ANCHOR CLUSTER - C6

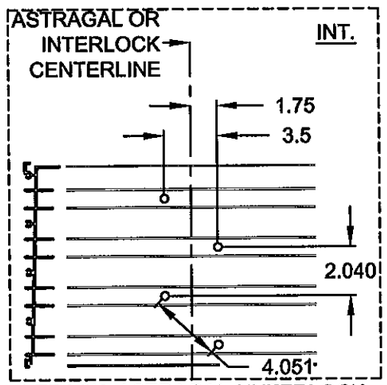

4-TRACK, ASTRAGAL / INTERLOCK
ANCHOR CLUSTER - C4

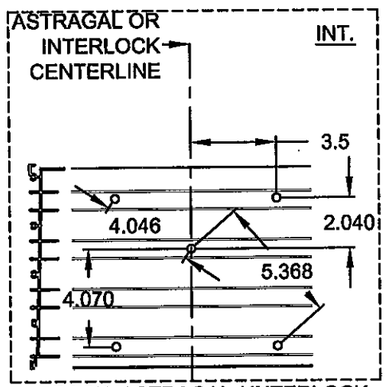

4-TRACK, ASTRAGAL / INTERLOCK
ANCHOR CLUSTER - C5

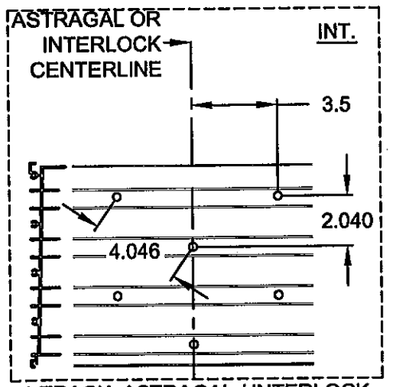

4-TRACK, ASTRAGAL / INTERLOCK
ANCHOR CLUSTER - C6

NOTE:
ALL DIMENSIONS SHOWN ARE BASED ON MINIMUM ALLOWED. ALL DIMENSIONS SHOWN ARE IN INCHES.

PRODUCT REVISED
as complying with the Florida Building Code
Acceptance No. 11-1018.14
Expiration Date 2.1.17.15
By Lewis L. Hanyak
Miami Dade Product Control

ANTHONY LYNN MILLER
LICENSE
No. 58705
10/11/11
STATE OF FLORIDA
PROFESSIONAL ENGINEER
A. LYNN MILLER, P.E.
P.E.# 58705

Revsd By:	Date:	Revisions:	
J.J.	10/11/11	C	NO CHANGE THIS SHEET
Revsd By:	Date:	Revisions:	
Revsd By:	Date:	Revisions:	
SMC	11/16/09	A	PER MIAMI DADE COMMENTS
Drawn By:	Date:	Checked By:	Date:
SMC	08/05/09		

1070 TECHNOLOGY DRIVE
NOKOMIS, FL 34275

P.O. BOX 1529
NOKOMIS, FL 34274

PGT®

Description:
ANCHORAGE, EXAMPLE CLUSTERS

Title:
SERIES 770 ALUMINUM SGD - LMI

Series/Model:	Scale:	Sheet:	Drawing No.	Rev:
SGD770	NTS	11 of 23	PGT0002	C

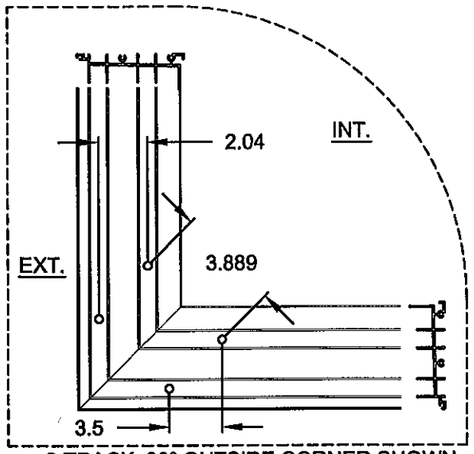

2-TRACK, 90° OUTSIDE CORNER SHOWN,
2-TRACK, 90° INSIDE CORNER SIMILAR (OPPOSITE)
ANCHOR CLUSTER - C4

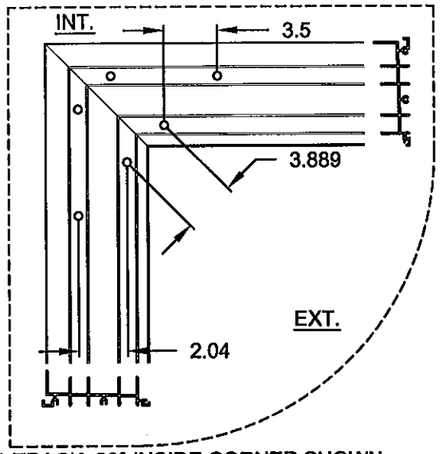

2-TRACK, 90° INSIDE CORNER SHOWN,
2-TRACK, 90° OUTSIDE CORNER SIMILAR (OPPOSITE)
ANCHOR CLUSTER - C6
USED FOR C5 AND C6

NOTE:
ALL DIMENSIONS SHOWN ARE BASED ON MINIMUM ALLOWED. ALL DIMENSIONS SHOWN ARE IN INCHES.

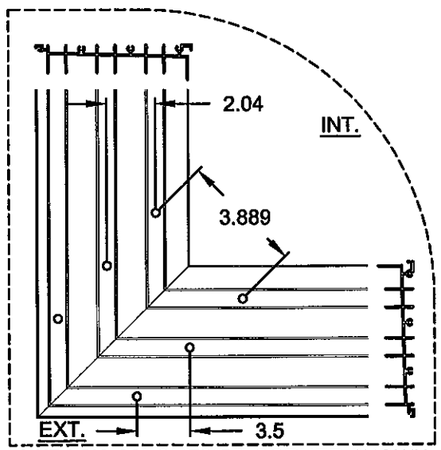

3-TRACK, 90° OUTSIDE CORNER SHOWN,
3-TRACK, 90° INSIDE CORNER SIMILAR (OPPOSITE)
C-6 ANCHOR CLUSTER REQUIRED
AT ALL 3-TRACK CORNERS

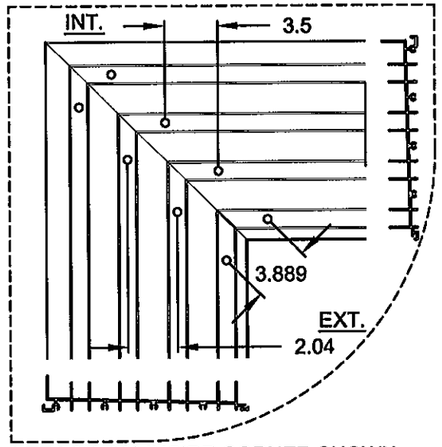

4-TRACK, 90° INSIDE CORNER SHOWN,
4-TRACK, 90° OUTSIDE CORNER SIMILAR (OPPOSITE)
C-8 ANCHOR CLUSTER REQUIRED
AT ALL 4-TRACK CORNERS

PRODUCT REVISED
as complying with the Florida Building Code
Acceptance No 11-1018.14
Expiration Date 2/17/15
By Ishaq I. Ishaq
Miami Dade Product Control

ANTHONY LYNN MILLER
LICENSE
No. 58705
STATE OF FLORIDA
PROFESSIONAL ENGINEER
A. LYNN MILLER, P.E.
P.E.# 58705

Revsd By:	Date:	Revisions:	
J.J.	10/11/11	C	NO CHANGE THIS SHEET
SMC	01/05/10	B	PER MIAMI DADE COMMENTS
SMC	11/16/09	A	PER MIAMI DADE COMMENTS
Drawn By: SMC	Date: 08/05/09	Checked By:	Date:

1070 TECHNOLOGY DRIVE
NOKOMIS, FL 34275

P.O. BOX 1529
NOKOMIS, FL 34274

PGT®

Description: ANCHORAGE, EXAMPLE CLUSTERS
Title: SERIES 770 ALUMINUM SGD - LMI

Series/Model:	Scale:	Sheet:	Drawing No.	Rev:
SGD770	NTS	12 of 23	PGT0002	C

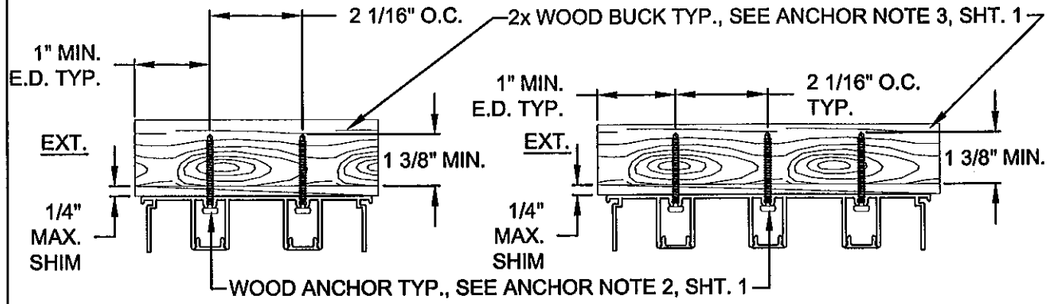

DETAIL A, 2-TRACK FRAME HEAD
WOOD INSTALLATION

DETAIL B, 3-TRACK FRAME HEAD
WOOD INSTALLATION

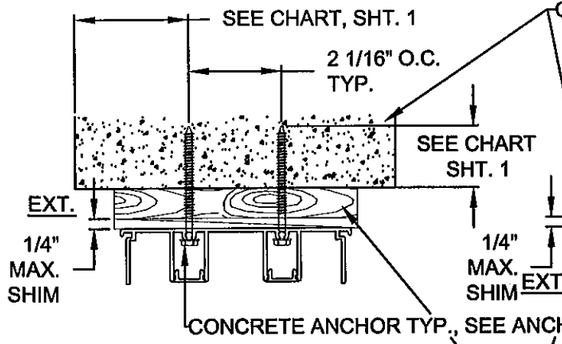

DETAIL C, 2-TRACK FRAME HEAD
CONCRETE INSTALLATION

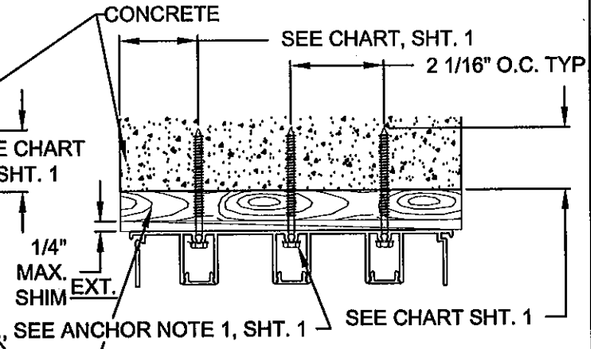

DETAIL D, 3-TRACK FRAME HEAD
CONCRETE INSTALLATION

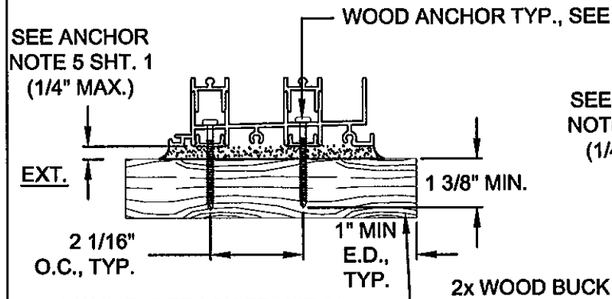

DETAIL E, 2-TRACK FRAME SILL
WOOD INSTALLATION

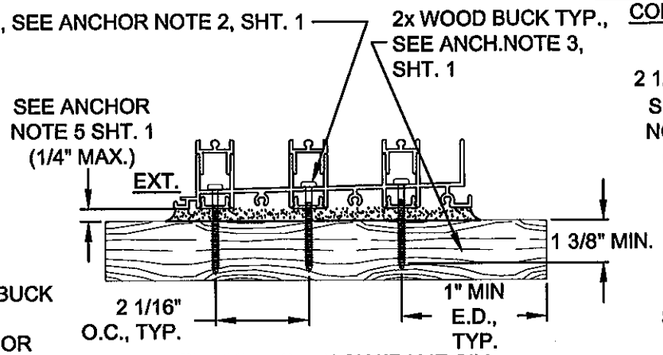

DETAIL F, 3-TRACK FRAME SILL
WOOD INSTALLATION

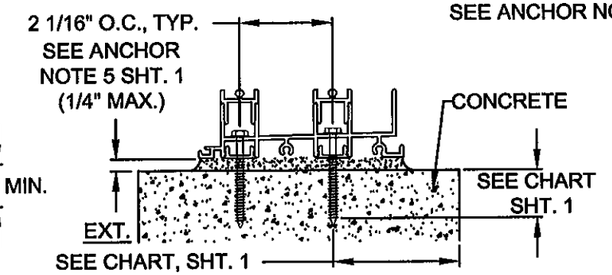

DETAIL G, 2-TRACK FRAME SILL
CONCRETE INSTALLATION

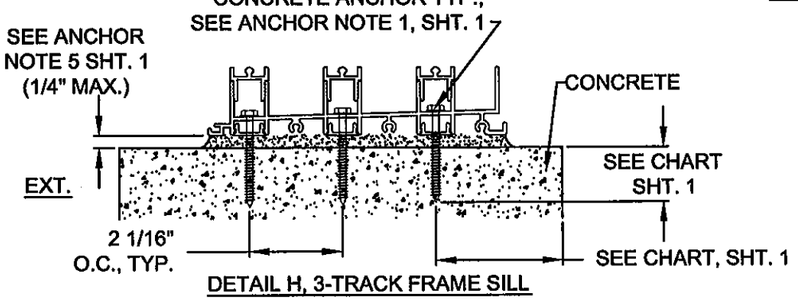

DETAIL H, 3-TRACK FRAME SILL
CONCRETE INSTALLATION

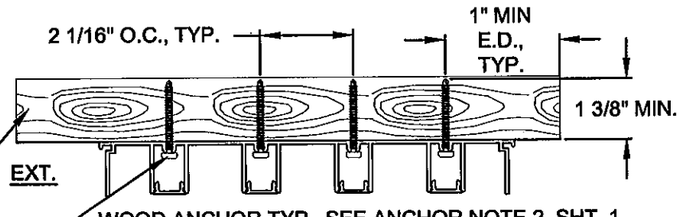

DETAIL I, 4-TRACK FRAME HEAD
WOOD INSTALLATION

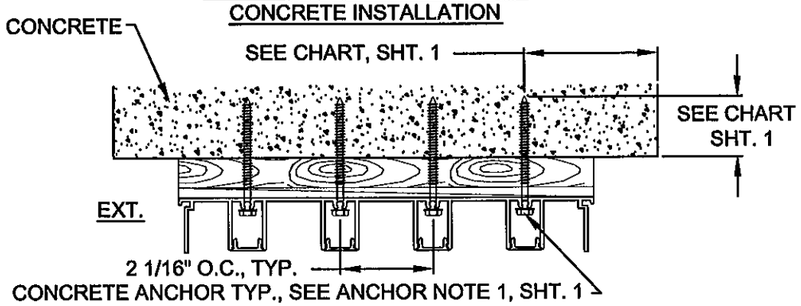

DETAIL J, 4-TRACK FRAME HEAD
CONCRETE INSTALLATION

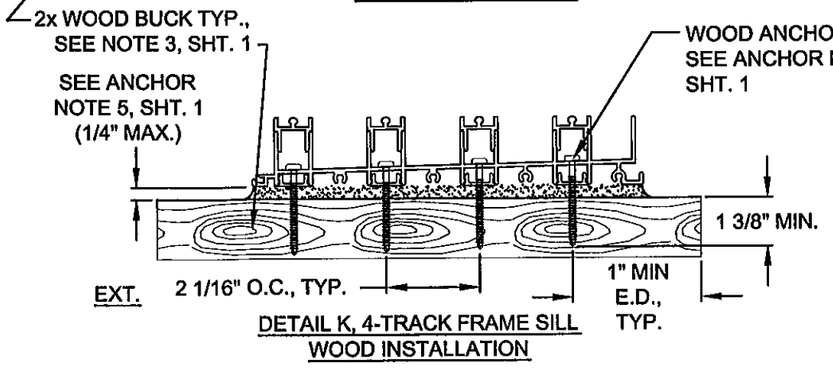

DETAIL K, 4-TRACK FRAME SILL
WOOD INSTALLATION

PRODUCT REVISED
as complying with the Florida Building Code
Acceptance No 11-1018.14
Expiration Date 2/17/15
By Ishan L. Ulmer
Miami Dade Product Control

Revsd By:	Date:	Revisions:	
J.J.	10/11/11	C	NO CHANGE THIS SHEET
SMC	01/05/10	B	PER MIAMI DADE COMMENTS
SMC	11/16/09	A	PER MIAMI DADE COMMENTS
Drawn By: SMC	Date: 08/05/09	Checked By:	Date:

1070 TECHNOLOGY DRIVE
NOKOMIS, FL 34275
P.O. BOX 1529
NOKOMIS, FL 34274

PGT®

Description: ANCHORAGE DETAILS
Title: SERIES 770 ALUMINUM SGD - LMI

Series/Model:	Scale:	Sheet:	Drawing No.	Rev:
SGD770	NTS	13 of 23	PGT0002	C

ANTHONY LYNN MILLER LICENSE No. 58705 STATE OF FLORIDA PROFESSIONAL ENGINEER
10/11/11
A. LYNN MILLER, P.E.
P.E.# 58705

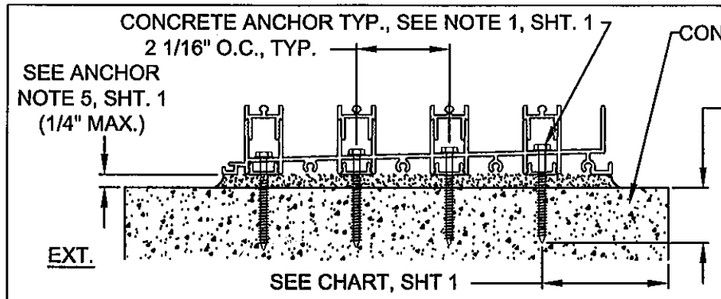

DETAIL L, 4-TRACK FRAME SILL CONCRETE INSTALLATION

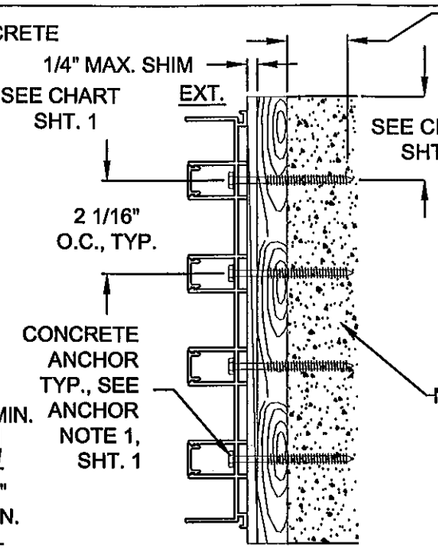

DETAIL O, 4-TRACK FRAME JAMB CONCRETE INSTALLATION

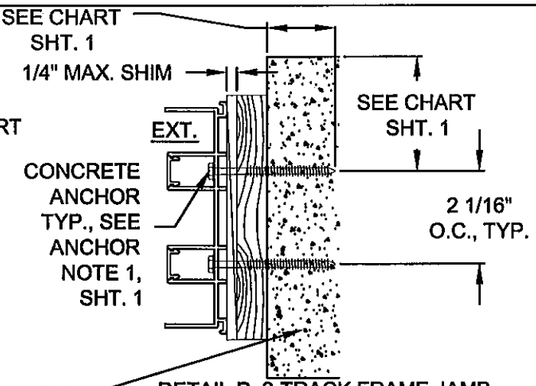

DETAIL P, 2-TRACK FRAME JAMB CONCRETE INSTALLATION

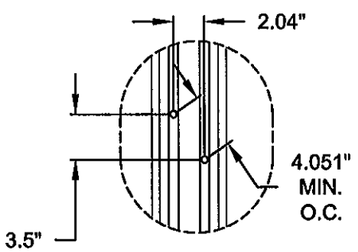

TYPICAL JAMB CLUSTER FOR DETAILS M, N, O, P, Q & R

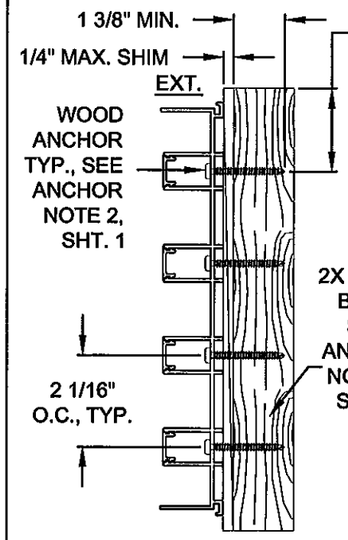

DETAIL M, 4-TRACK FRAME JAMB WOOD INSTALLATION

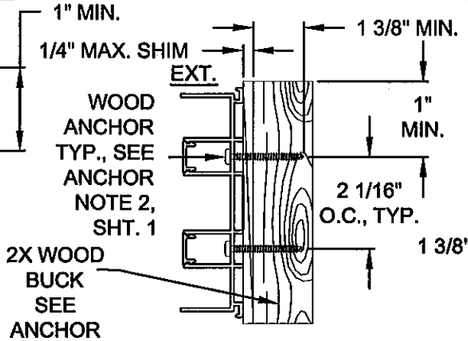

DETAIL N, 2-TRACK FRAME JAMB WOOD INSTALLATION

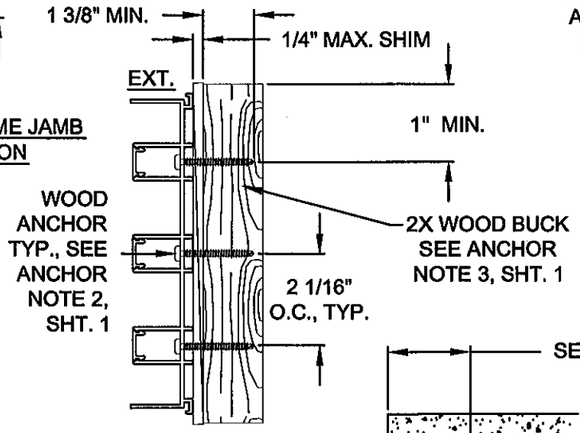

DETAIL Q, 3-TRACK FRAME JAMB WOOD INSTALLATION

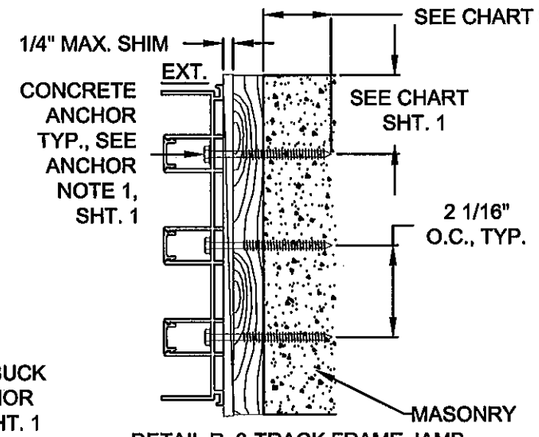

DETAIL R, 3-TRACK FRAME JAMB CONCRETE INSTALLATION

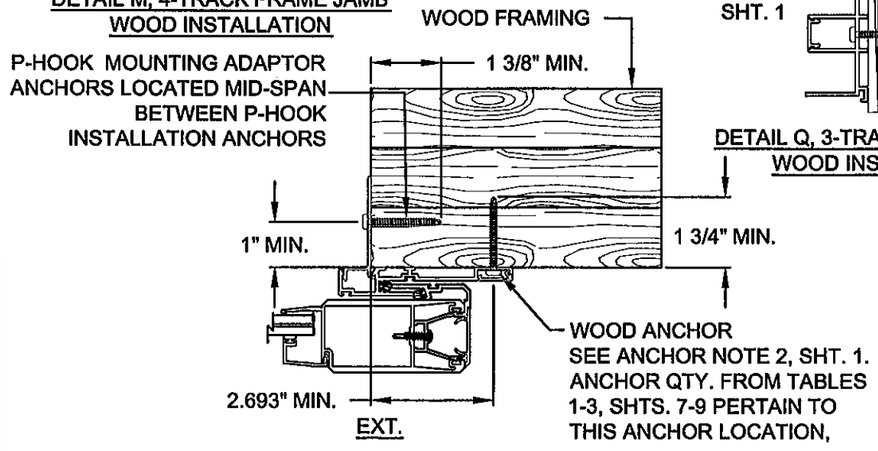

DETAIL S, P-HOOK WOOD INSTALLATION

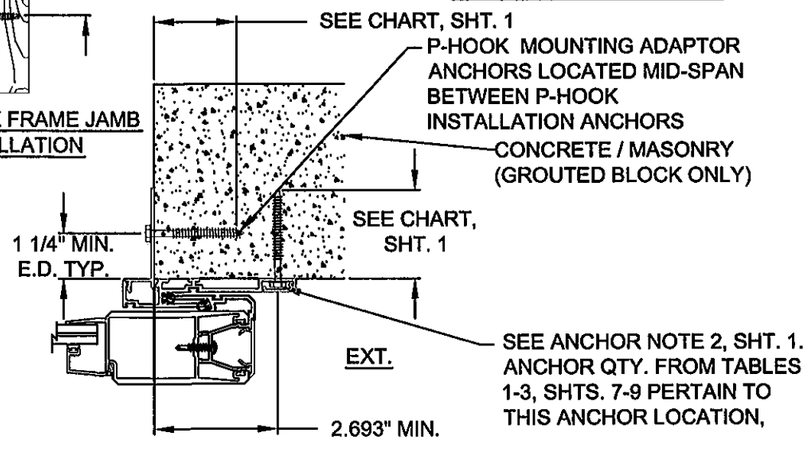

DETAIL T, P-HOOK CONCRETE INSTALLATION

PRODUCT REVISED as complying with the Florida Building Code
Acceptance No. 11-1018.14
Expiration Date 2/17/15
By Ishaq I. Chund.
Miami Dade Product Control

Revsd By:	Date:	Revisions:	
J.J.	10/11/11	C	NO CHANGE THIS SHEET
SMC	01/05/10	B	PER MIAMI DADE COMMENTS
SMC	11/16/09	A	PER MIAMI DADE COMMENTS
Drawn By: SMC	Date: 08/05/09	Checked By:	Date:

1070 TECHNOLOGY DRIVE
NOKOMIS, FL 34275

P.O. BOX 1529
NOKOMIS, FL 34274

PGT®

Description: ANCHORAGE DETAILS

Title: SERIES 770 ALUMINUM SGD - LMI

Series/Model:	Scale:	Sheet:	Drawing No.	Rev:
SGD770	NTS	14 of 23	PGT0002	C

ANTHONY LYNN MILLER LICENSE No. 58705 STATE OF FLORIDA PROFESSIONAL ENGINEER
10/11/11
A. LYNN MILLER, P.E.
P.E.# 58705

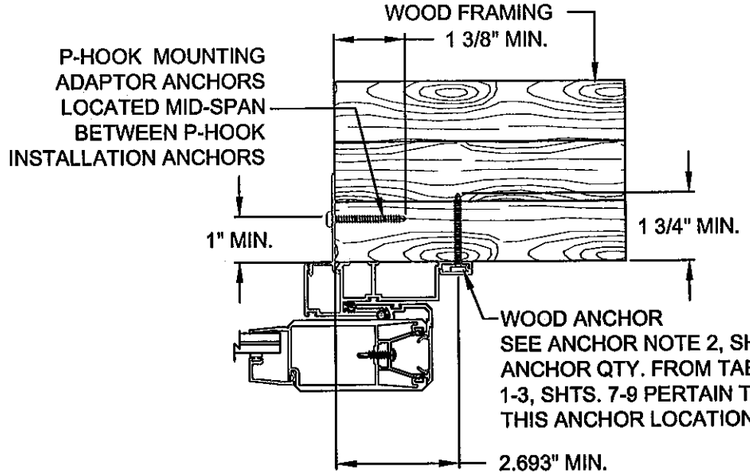

DETAIL MM, P-HOOK FOR BOX RISER WOOD INSTALLATION

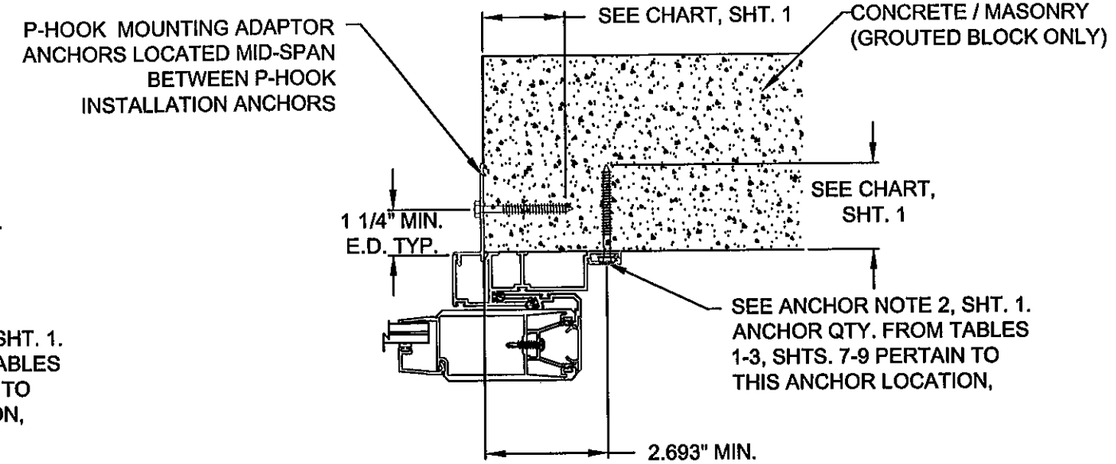

DETAIL NN, P-HOOK FOR BOX RISER CONCRETE INSTALLATION

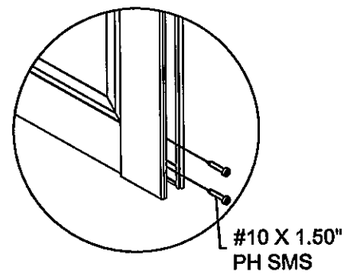

PANEL CORNER DETAIL

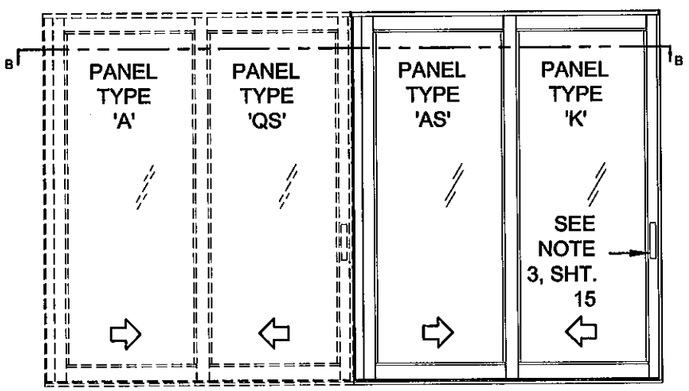

DLO WIDTH = NOM. PANEL WIDTH - 7"
DLO HEIGHT = NOM. PANEL HEIGHT - 8.25"

XX-90° CORNER-XX (2 TRACK INSIDE 90° CORNER)
*SEE APPLICABLE ASTRAGAL & INTERLOCK PER DP TABLES

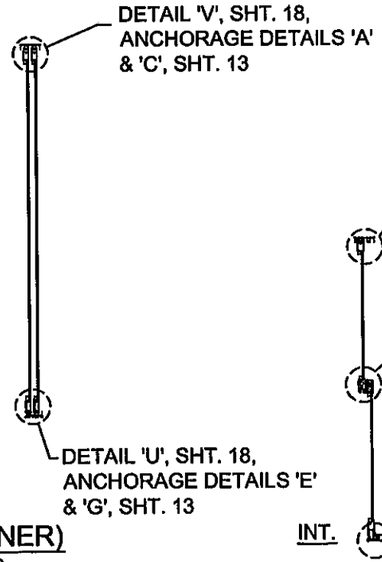

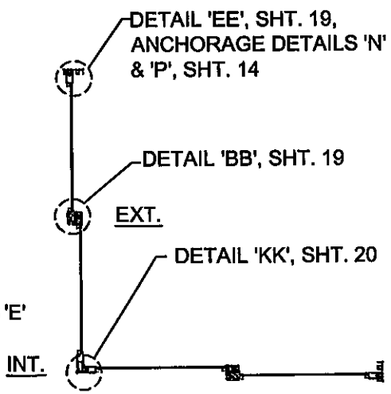

HORIZONTAL SECTION B-B

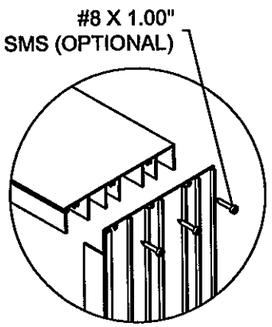

FRAME CORNER DETAIL

PRODUCT REVISED
as complying with the Florida Building Code
Acceptance No. 11-1018.14
Expiration Date 2-17-15
By Ishaq I. Chanda
Miami Dade Product Control

ANTHONY LYNN MILLER LICENSE No. 58705 STATE OF FLORIDA PROFESSIONAL ENGINEER
10/11/11
A. LYNN MILLER, P.E.
P.E.# 58705

Revsd By:	Date:	Revisions:	
J.J.	10/11/11	C	NO CHANGE THIS SHEET
SMC	01/05/10	B	PER MIAMI DADE COMMENTS
SMC	11/16/09	A	PER MIAMI DADE COMMENTS
Drawn By: SMC	Date: 08/05/09	Checked By:	Date:

1070 TECHNOLOGY DRIVE
NOKOMIS, FL 34275
P.O. BOX 1529
NOKOMIS, FL 34274

Description: ANCHORAGE DETAILS / EXAMPLE ELEVATION
Title: SERIES 770 ALUMINUM SGD - LMI

Series/Model:	Scale:	Sheet:	Drawing No.	Rev:
SGD770	NTS	15 of 23	PGT0002	C

NOTES:

1. SEE SHT. 17 FOR INDIVIDUAL PANEL CONFIGURATIONS AS APPLICABLE. PLEASE SEE DP CHARTS FOR MAX PANEL HEIGHT AND WIDTH. PLEASE SEE SHTS. 18-20 FOR SECTION DETAILS AND SHTS. 7-15 FOR ANCHORAGE DETAILS.
2. DLO WIDTH = NOM. PANEL WIDTH - 7" DLO HEIGHT = NOM. PANEL HEIGHT - 8.25"
3. (1) LOCK (ITEMS 70 & 107-110) AT EACH LOCKSTILE, LOCKING INTO KEEPER (ITEM 103) AT FRAME JAMB OR ASTRAGAL.
4. PLEASE SEE APPLICABLE ASTRAGAL & INTERLOCK COMBINATIONS PER DP TABLES.

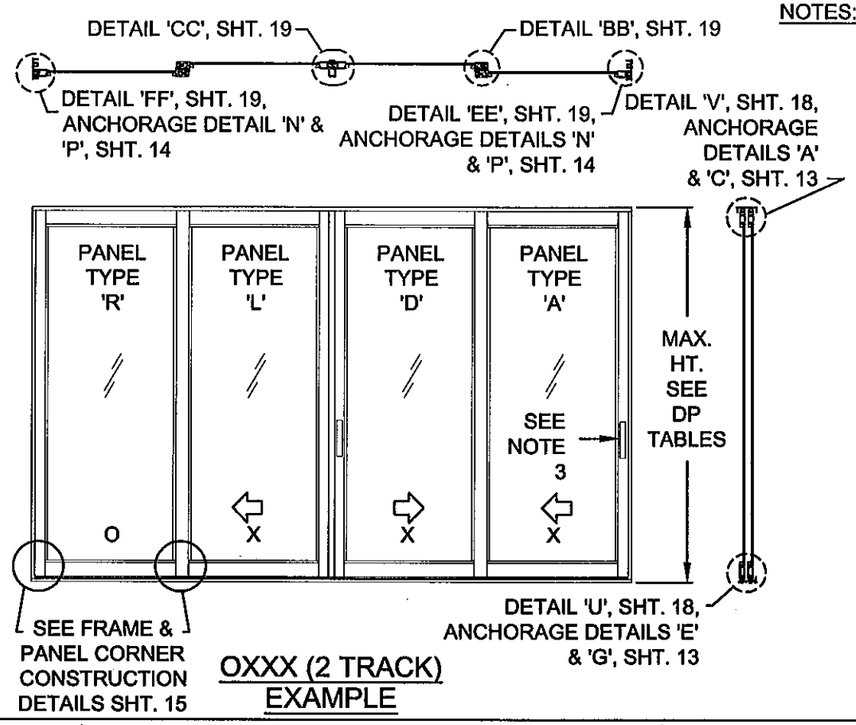

OXXX (2 TRACK) EXAMPLE

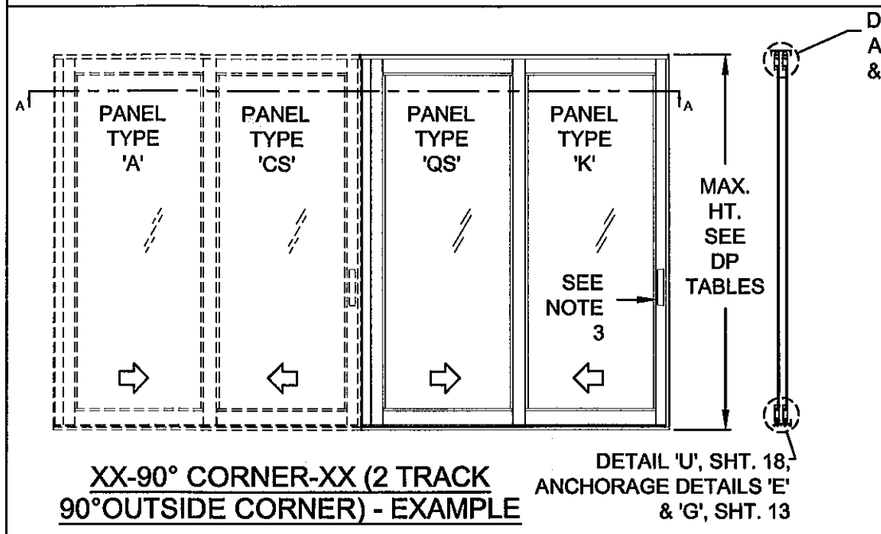

XX-90° CORNER-XX (2 TRACK 90°OUTSIDE CORNER) - EXAMPLE

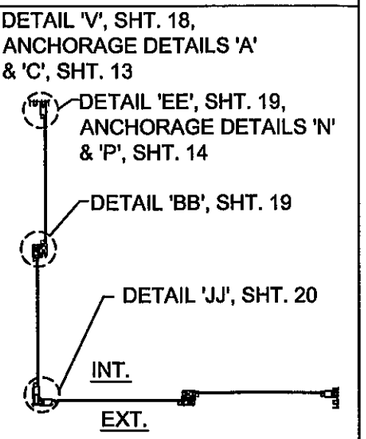

HORIZONTAL SECTION A-A

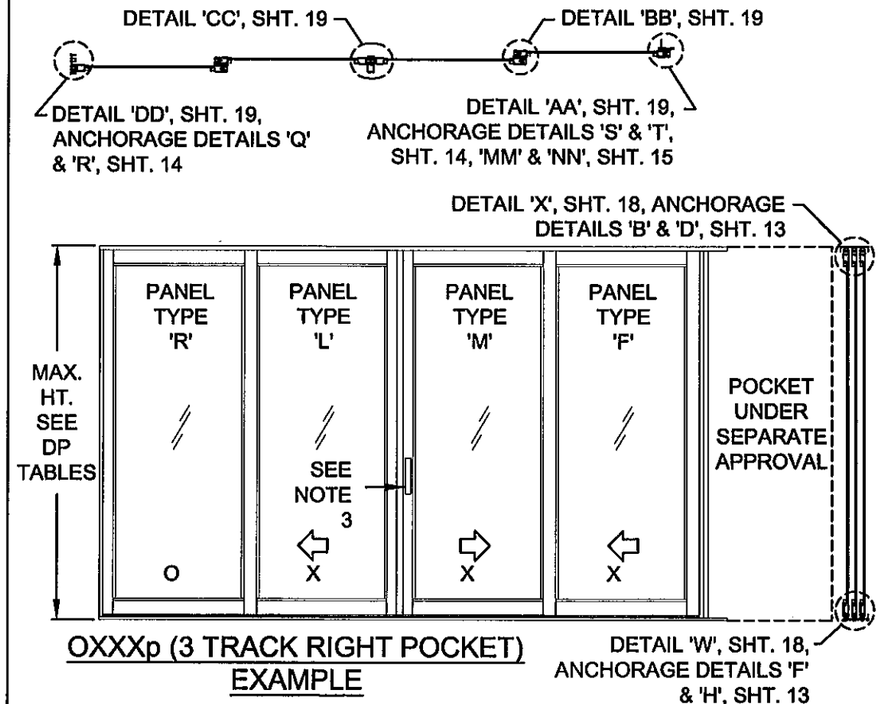

OXXXp (3 TRACK RIGHT POCKET) EXAMPLE

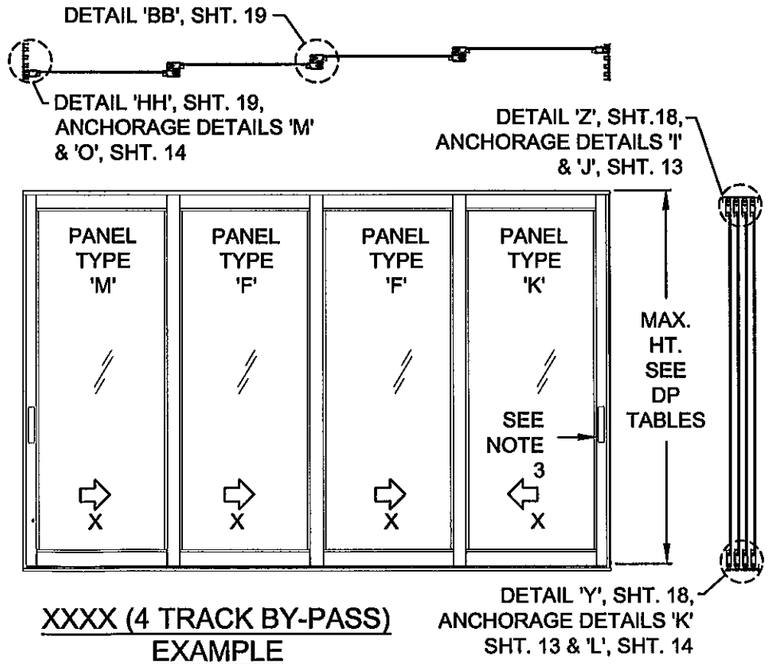

XXXX (4 TRACK BY-PASS) EXAMPLE

PRODUCT REVISED
as complying with the Florida Building Code
Acceptance No. 11-1018.14
Expiration Date 2/17/15
By Ishan T. Chawla
Miami Dade Product Control

Revsd By:	Date:	Revisions:	
J.J.	10/11/11	C	NO CHANGE THIS SHEET
SMC	01/05/10	B	PER MIAMI DADE COMMENTS
SMC	11/16/09	A	PER MIAMI DADE COMMENTS
Drawn By: SMC	Date: 08/05/09	Checked By: RJA	Date:

1070 TECHNOLOGY DRIVE
NOKOMIS, FL 34275

P.O. BOX 1529
NOKOMIS, FL 34274

Description: EXAMPLE ELEVATIONS

Title: SERIES 770 ALUMINUM SGD - LMI

Series/Model:	Scale:	Sheet:	Drawing No.	Rev:
SGD770	NTS	16 of 23	PGT0002	C

ANTHONY LYNN MILLER LICENSE No. 58705 STATE OF FLORIDA PROFESSIONAL ENGINEER

A. LYNN MILLER, P.E.
P.E.# 58705

PANEL LETTER			PANEL LETTER		
P	SINGLE INTERLOCK	FIXED LOCKSTILE	J (BOX IN)	LOCKSTILE	ASTRAGAL IN
R	FIXED LOCKSTILE	SINGLE INTERLOCK	M	LOCKSTILE	SINGLE INTERLOCK
T (BOX OUT)	ASTRAGAL OUT	FIXED LOCKSTILE	CS	CORNER RECEIVER	SINGLE INTERLOCK
T (BOX IN)	ASTRAGAL IN	FIXED LOCKSTILE	SC	SINGLE INTERLOCK	CORNER RECEIVER
S (BOX OUT)	FIXED LOCKSTILE	ASTRAGAL OUT	QS	CORNER LOCKSTILE	SINGLE INTERLOCK
S (BOX IN)	FIXED LOCKSTILE	ASTRAGAL IN	SQ	SINGLE INTERLOCK	CORNER LOCKSTILE
L (BOX OUT)	SINGLE INTERLOCK	ASTRAGAL OUT	AS	CORNER RECEIVER	SINGLE INTERLOCK
LR (BOX OUT)	ASTRAGAL OUT	SINGLE INTERLOCK	SA	SINGLE INTERLOCK	CORNER RECEIVER
N (BOX OUT)	ASTRAGAL IN	SINGLE INTERLOCK	CI	CORNER LOCKSTILE	SINGLE INTERLOCK
C (BOX IN)	SINGLE INTERLOCK	ASTRAGAL IN	IC	SINGLE INTERLOCK	CORNER LOCKSTILE
B	SINGLE INTERLOCK	SINGLE INTERLOCK	CF	CORNER RECEIVER	FIXED LOCKSTILE
F	SINGLE INTERLOCK	SINGLE INTERLOCK	FC	FIXED LOCKSTILE	CORNER RECEIVER
E	SINGLE INTERLOCK	SINGLE INTERLOCK	PP	SINGLE INTERLOCK	FIXED LOCKSTILE
K	SINGLE INTERLOCK	LOCKSTILE	RR	FIXED LOCKSTILE	SINGLE INTERLOCK
U (BOX OUT)	ASTRAGAL OUT	LOCKSTILE			
U (BOX IN)	ASTRAGAL IN	LOCKSTILE			
A	SINGLE INTERLOCK	LOCKSTILE			
D	LOCKSTILE	SINGLE INTERLOCK			
J (BOX OUT)	LOCKSTILE	ASTRAGAL OUT			

NOTE:
1. SEE DP TABLES FOR PANEL WIDTH & APPLICABLE ASTRAGAL & INTERLOCKS.

INTERIOR
(ALL PANEL TYPES)
EXTERIOR

PRODUCT REVISED
as complying with the Florida Building Code
Acceptance No 11-1018.14
Expiration Date 2/17/15
By Ishaq I. Chawla
Miami Dade Product Control

Revsd By:	Date:	Revisions:	
J.J.	10/11/11	C	NO CHANGE THIS SHEET
Revsd By:	Date:	Revisions:	
Revsd By: SMC	Date: 11/16/09	Revisions: A	PER MIAMI DADE COMMENTS
Drawn By: SMC	Date: 08/05/09	Checked By: RJA	Date:

1070 TECHNOLOGY DRIVE
NOKOMIS, FL 34275

P.O. BOX 1529
NOKOMIS, FL 34274

PGT®

Description: PANEL TYPES

Title: SERIES 770 ALUMINUM SGD - LMI

Series/Model:	Scale:	Sheet:	Drawing No.	Rev:
SGD770	NTS	17 of 23	PGT0002	C

ANTHONY LYNN MILLER
LICENSE
No. 58705
STATE OF FLORIDA
PROFESSIONAL ENGINEER
10/11/11

A. LYNN MILLER, P.E.
P.E.# 58705

SILL RISERS OPTIONS

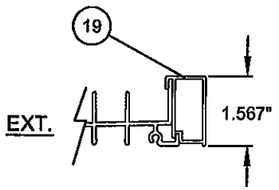

FLUSH BOX SILL RISER

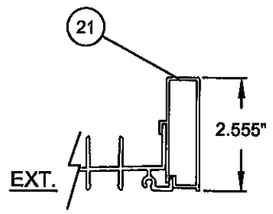

LOW BOX SILL RISER

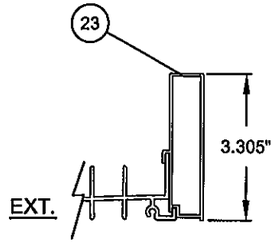

MEDIUM BOX SILL RISER

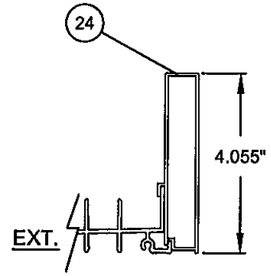

HIGH BOX SILL RISER

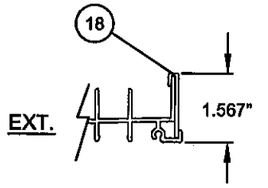

FLUSH FLAT SILL RISER

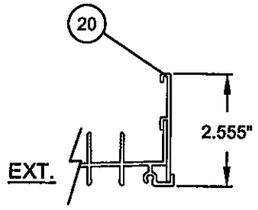

LOW FLAT SILL RISER

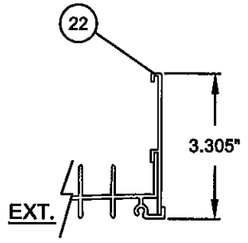

MEDIUM FLAT SILL RISER

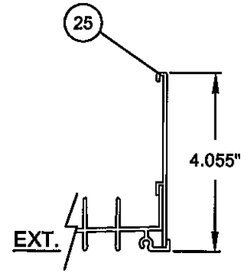

HIGH FLAT SILL RISER

EXTERIOR INTERIOR
(ALL VERT. SECTIONS)

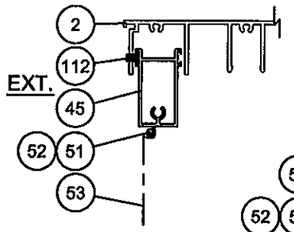

DETAIL 'LL' SCREEN AT HEAD

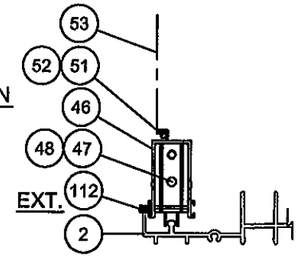

DETAIL 'MM' SCREEN AT SILL

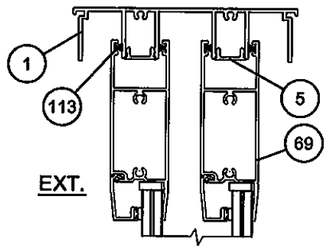

DETAIL 'V'

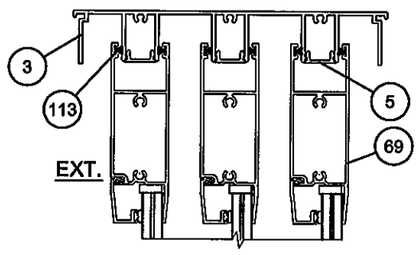

DETAIL 'X'

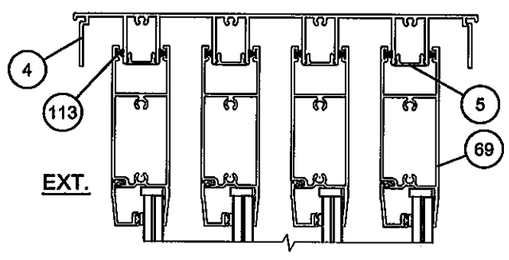

DETAIL 'Z'

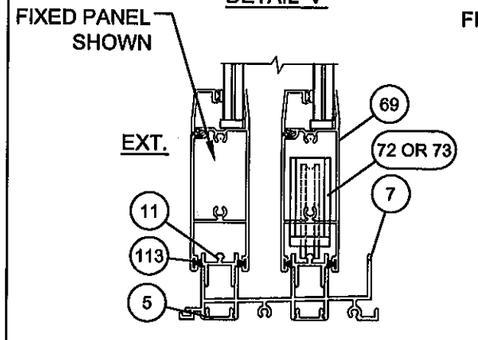

DETAIL 'U'

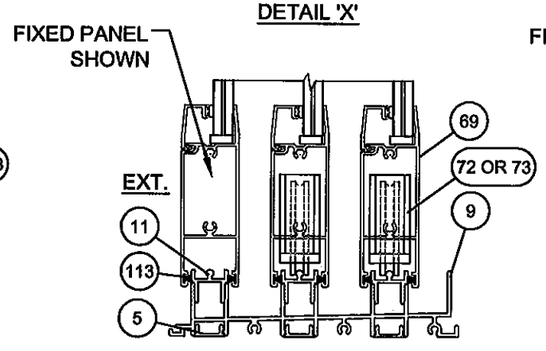

DETAIL 'W'

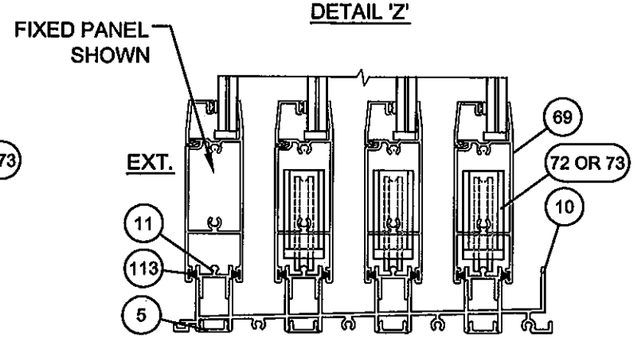

DETAIL 'Y'

PRODUCT REVISED
as complying with the Florida Building Code
Acceptance No. 11-1018.14
Expiration Date: 2/17/15
By: Isling L. Chandler
Miami Dade Product Control

Revsd By:	Date:	Revisions:	
J.J.	10/11/11	C	NO CHANGE THIS SHEET
SMC	01/05/10	B	PER MIAMI DADE COMMENTS
SMC	11/16/09	A	PER MIAMI DADE COMMENTS
Drawn By: SMC	Date: 08/05/09	Checked By: RJA	Date:

1070 TECHNOLOGY DRIVE
NOKOMIS, FL 34275

P.O. BOX 1529
NOKOMIS, FL 34274

PGT®

Description: VERTICAL SECTION DETAILS

Title: SERIES 770 ALUMINUM SGD - LMI

Series/Model:	Scale:	Sheet:	Drawing No.	Rev:
SGD770	NTS	18 of 23	PGT0002	C

ANTHONY LYNN MILLER
LICENSE
No. 58705
STATE OF FLORIDA
PROFESSIONAL ENGINEER
10/11/11

A. LYNN MILLER, P.E.
P.E.# 58705

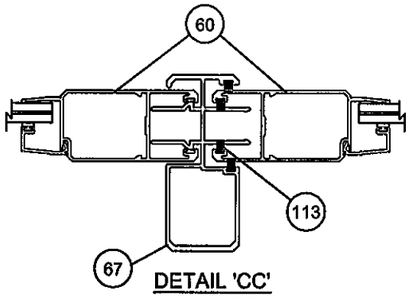

DETAIL 'CC'
STANDARD ASTRAGAL
AND STILES

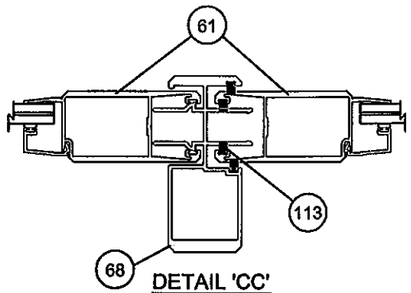

DETAIL 'CC'
HEAVY DUTY ASTRAGAL
AND STILES

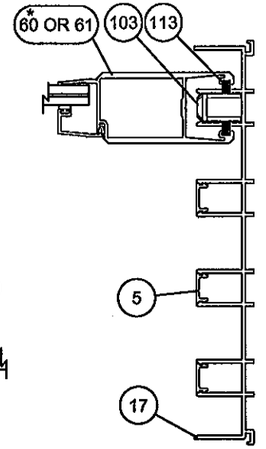

DETAIL 'HH'

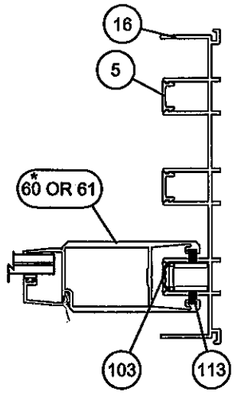

DETAIL 'II'

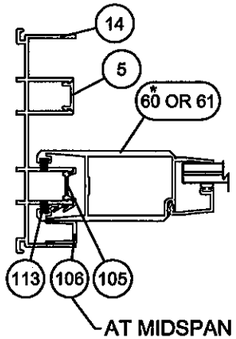

AT MIDSPAN
DETAIL 'FF' (FIXED PANEL)

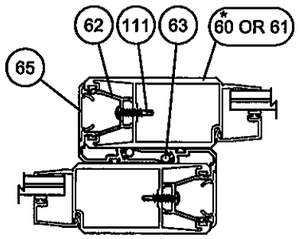

DETAIL 'BB'

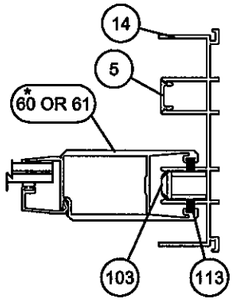

DETAIL 'EE'

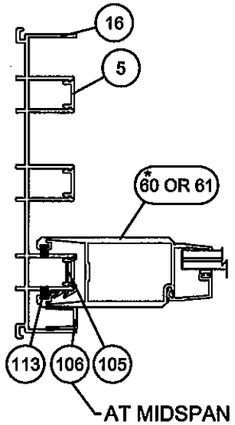

AT MIDSPAN
DETAIL 'DD' (FIXED PANEL)

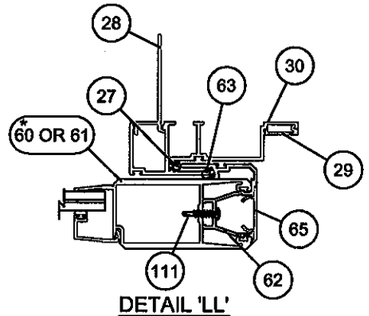

DETAIL 'LL'

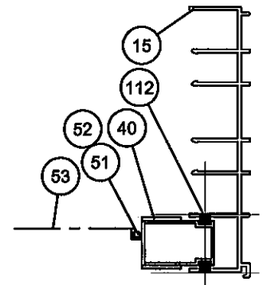

DETAIL 'NN' SCREEN
AT JAMB

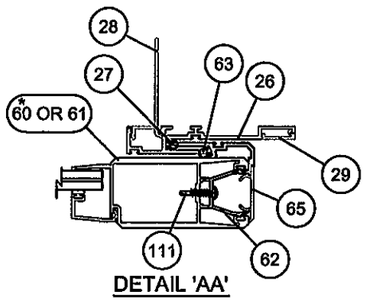

DETAIL 'AA'

INTERIOR
(ALL HORIZ. SECTIONS)
EXTERIOR

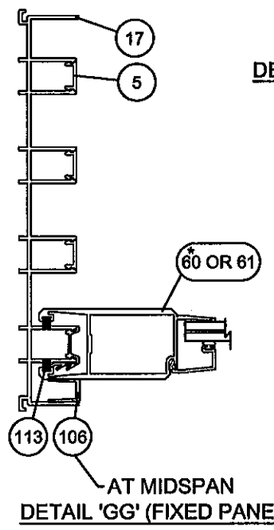

AT MIDSPAN
DETAIL 'GG' (FIXED PANEL)

*ITEM 61 SHOWN, ITEM 60 ALSO APPLICABLE, SEE TABLES 1-3, SHTS. 7-9 FOR DP (PSF) ASSOCIATED WITH STILE

PRODUCT REVISED
as complying with the Florida Building Code
Acceptance No. 11-1018.14
Expiration Date 2/17/15
By Ishaq I. Chanda
Miami Dade Product Control

Revsd By:	Date:	Revisions:	
J.J.	10/11/11	C	NO CHANGE THIS SHEET
SMC	01/05/10	B	PER MIAMI DADE COMMENTS
SMC	11/16/09	A	PER MIAMI DADE COMMENTS
Drawn By: SMC	Date: 08/05/09	Checked By: RAJ	Date:

1070 TECHNOLOGY DRIVE
NOKOMIS, FL 34275
P.O. BOX 1529
NOKOMIS, FL 34274

PGT®

Description: HORIZONTAL SECTION DETAILS
Title: SERIES 770 ALUMINUM SGD - LMI

Series/Model:	Scale:	Sheet:	Drawing No.	Rev:
SGD770	NTS	19 of 23	PGT0002	C

ANTHONY LYNN MILLER
LICENSE
No. 58705
STATE OF FLORIDA
PROFESSIONAL ENGINEER
10/11/11
A. LYNN MILLER, P.E.
P.E.# 58705

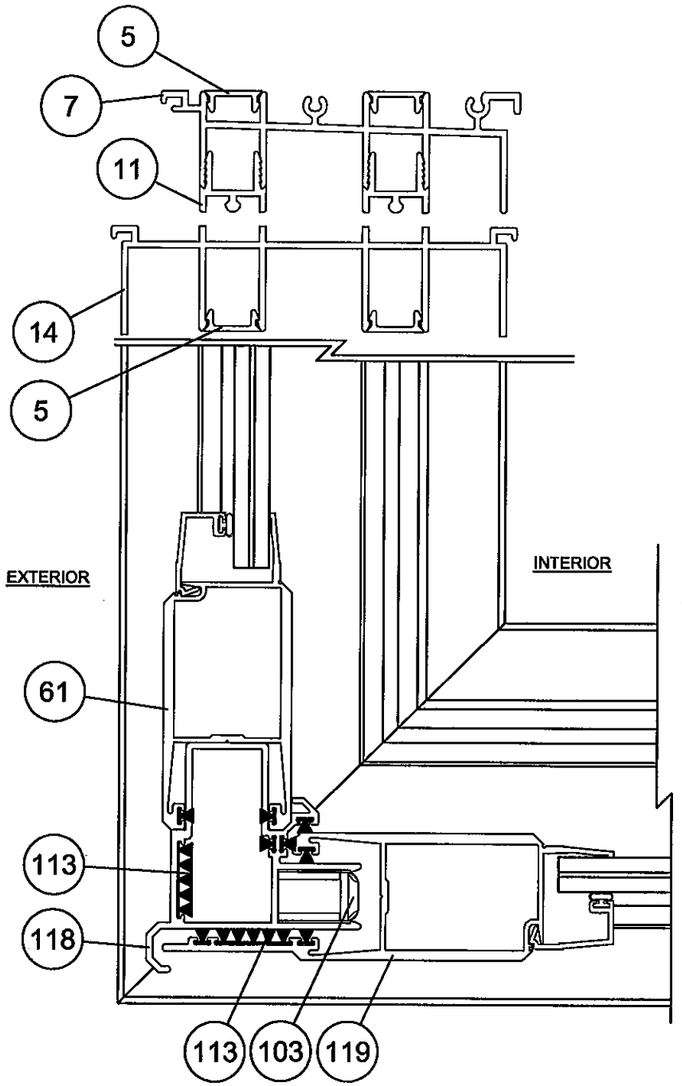

DETAIL 'JJ'

(90° OUTSIDE CORNER, 2-TRACK SHOWN)

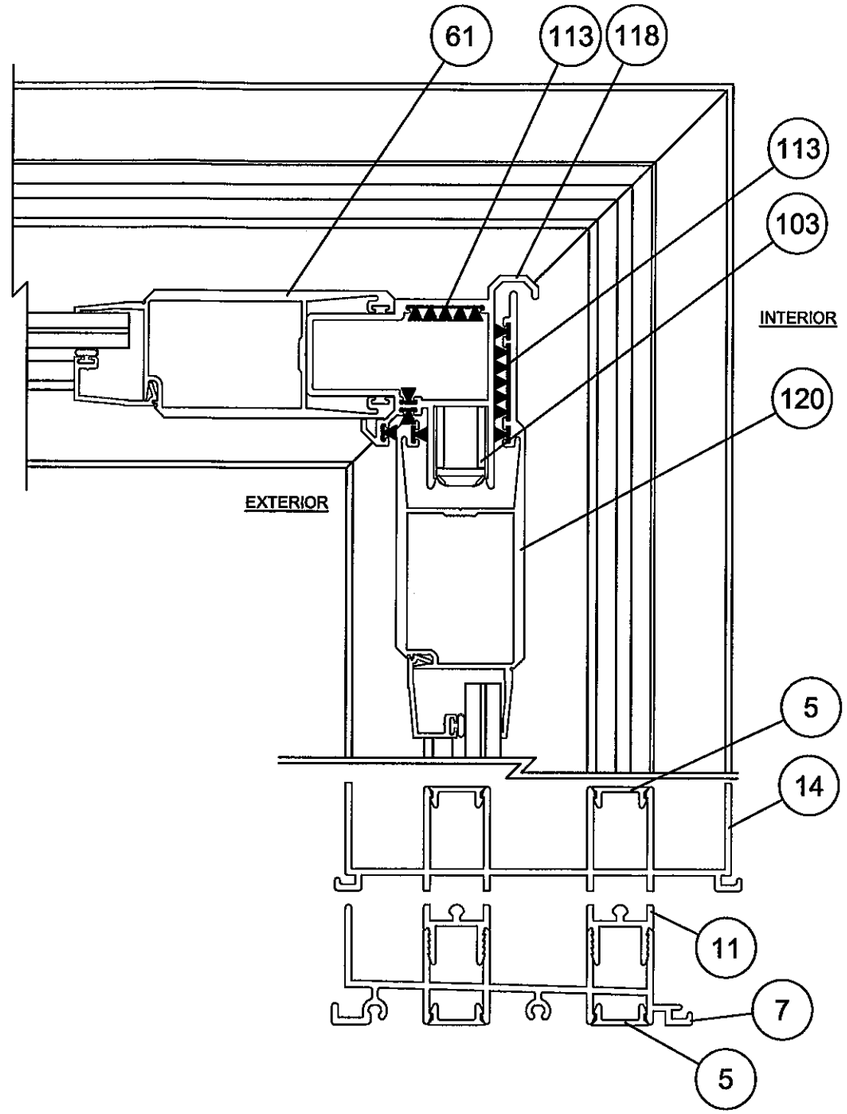

DETAIL 'KK'

(90° INSIDE CORNER, 2 TRACK SHOWN)

PRODUCT REVISED
as complying with the Florida
Building Code
Acceptance No 11-1018.14
Expiration Date 2/17/15
By Ishaq I. Chaudhuri
Miami Dade Product Control

ANTHONY LYNN MILLER
LICENSE
No. 58705
10/11/11
STATE OF FLORIDA
PROFESSIONAL ENGINEER

A. LYNN MILLER, P.E.
P.E.# 58705

Revsd By:	Date:	Revisions:	
J.J.	10/11/11	C	NO CHANGE THIS SHEET
Revsd By:	Date:	Revisions:	
Revsd By: SMC	Date: 11/16/09	Revisions: A	PER MIAMI DADE COMMENTS
Drawn By: SMC	Date: 08/05/09	Checked By: RJA	Date:

1070 TECHNOLOGY DRIVE
NOKOMIS, FL 34275

P.O. BOX 1529
NOKOMIS, FL 34274

PGT®

Description: HORIZONTAL SECTION DETAILS, CORNERS

Title: SERIES 770 ALUMINUM SGD - LMI

Series/Model:	Scale:	Sheet:	Drawing No.	Rev:
SGD770	NTS	20 of 23	PGT0002	C

ITEM	PGT Dwg. #	PGT. #	Description
1	17306	617306	2-TRACK HEAD
2	17303	617303	2-TRACK HEAD WITH SCREEN RAIL
3	17309	617309	3-TRACK HEAD
4	17312	617312	4-TRACK HEAD
5	17314	617314	FRAME SCREW COVER
6	17317	617317	FRAME HEAD/JAMB ADD-ON
7	17304	617304	2-TRACK SILL
8	17301	617301	2-TRACK SILL WITH SCREEN RAIL
9	17307	617307	3-TRACK SILL
10	17310	617310	4-TRACK SILL
11	17313	617313	FRAME SILL TRACK INSERT
12	17315	617315	FRAME SILL SCREEN ADD-ON
13	17316	617316	FRAME SILL SCREEN END ADD-ON
14	17305	617305	2-TRACK JAMB
15	17302	617302	2-TRACK JAMB WITH SCREEN RAIL
16	17308	617308	3-TRACK JAMB
17	17311	617311	4-TRACK JAMB
18	17322	617322	SILL RISER - 0
19	17319	617319	SILL RISER - 0 HOLLOW
20	17321	617321	SILL RISER - LOW FLAT
21	17318	617318	SILL RISER - LOW HOLLOW
22	17355	617355	SILL RISER - MED FLAT
23	17354	617354	SILL RISER - MED HOLLOW
24	17320	617320	SILL RISER - HIGH HOLLOW
25	17323	617323	SILL RISER - HIGH FLAT
26	17333	617333	POCKET DOOR P-HOOK
27	7070	67070	NEOPRENE BULB WSTP FOR P-HOOK
28	17334	617334	POCKET DOOR P-HOOK MOUNT
29	17335	617335	P-HOOK COVER
30	17348	617348	POCKET DOOR P-HOOK FOR BOX RISER

OPTIONAL PARTS (NOT SHOWN IN DRAWING)

40	4319	612258	SCREEN SIDE RAIL - LOCKSTILE
41		7LOCKWGSK	SCREEN LOCKSET
42		41818	SCREEN KEEPER SPACER SET
43	8152	68152	SCREEN INTERLOCK ADAPTER
44	4428	64428	SCREEN DOUBLE INTERLOCK
45	4317	612256	SCREEN TOP RAIL
46	4318	612257	SCREEN BOTTOM RAIL
47	668	7SRAZ	STANDARD ROLLER
48	668	7SRAX	STANDARD ROLLER - ST. STL.
49	4344	64344	SCREEN ASTRAGAL
50	17349	617349	OXO SCREEN ASTRAGAL ADAPTER
51	1692	61692	SCREEN SPLINE - .165
52	1694	61694	SCREEN SPLINE - .150
53		61816C20	SCREEN CLOTH
54	1725		1/2" x 4" x 1/16" SITTING BLOCK
55	1726		1" X 4" X 1/16" SITTING BLOCK

202		GLASS	7/16 LAMINATED HT-HT PVB
203		GLASS	9/16 LAMINATED HT-HT PVB
204		GLASS	7/16 LAMINATED HT-HT SGP
205		GLASS	9/16 LAMINATED HT-HT SGP

NOTE: ALL ALUMINUM = 6063-T6

ITEM	PGT Dwg. #	PGT. #	Description
60	17325	617325	PANEL STILE
61	17326	617326	PANEL STILE (HEAVY DUTY)
62	17327	617327	INTERLOCK ADAPTOR
63	1225	6TP248	VINYL BULB WSTP. - THIN (INSIDE INTERLOCK)
64	1729	71729	SILL END WEATHERSTRIP PAD
65	17328	617328	INTERLOCK SCREW COVER
67	17329	617329	ASTRAGAL
68	17339	617339	HEAVY DUTY ASTRAGAL
69	17324	617324	TOP & BOTTOM RAIL
70	17350	417350	WEATHERSTRIP EXTENSION (INJECTION MOLDED)
71	1695	71695	1 1/2" X 1" X 3/4" HIGH FIN SEAL DUST PLUGS
72	8153	78153X	TANDEM ST. STL. ROLLER ASSY.
73	8153	78153N	TANDEM NYLON ROLLER ASSY.
74		SILICONE	DOW 899 OR 995
75	8185	78185X	GEMINI MORTICE 3-PLY DUAL LOCK W/LONG TRIM PLATE
76		71032X1FPFX	#10-32 X 1" FL. SS SCREW W/ TYPE "F" TIP
77		7103239	10-32 STEEL ZINC U-NUT
78	17358	617358	3/16 & 1/4 OGEE BEAD HORIZONTAL
79	17357	617357	1" IG BEAD HORIZONTAL
80	17359	617359	7/16 BEAD HORIZONTAL
81	17360	617360	9/16 BEAD HORIZONTAL
82	1224	6TP247K	VINYL BULB WEATHERSTRIP
83		IGTAPE	1/2"X 1/16" SINGLE SIDE ADHESIVE TAPE FOR IG BEAD

100	8052	48052	ROLLER ADJ. HOLE PLUG
101		72087	JAMB BUMPER
102	1696	71696	DUST PLUG
103	8186	78186X	1" KEEPER
104	653	7SDKEEP	SCREEN LOCK KEEPER
105	17344	617344	FIXED PANEL CLIP - 6" LONG
106	17352	617352	EXTERIOR FIXED PANEL RETAINER
107	1739	71739	HANDLE KIT - INTERIOR RAISED WITH THUMB TURN
108	1740	71740	HANDLE KIT - RAISED EXTERIOR HANDLE
109	1731	78162SN	HANDLE KIT - RECESSED INTERIOR WITH THUMB TURN
110	1732	78178	HANDLE KIT - RECESSED EXTERIOR PULL
111		710X34PPSDAX	#10 X 3/4" PH. PN. TEK - S.S.
112	1235	67S16	WSTP, .270 X .170 - FIN SEAL
113	1712	64066	.187 X .230 FINSEAL
114		710X115PPX	#10X 1 1/2"
115		710XPPT	#10X 1"
116		720X1X	#14-20 X 1" ST. STL.
117		720X112X	#14-20 X 1.5" ST. STL.
118	17336	617336	CORNER RECEIVER
119	17337	617337	OUTSIDE CORNER ASTRAGAL
120	17338	6117338	INSIDE CORNER ASTRAGAL

210		GLASS	LAMINATED IG 3/16T - 7/16 LAMINATED HT-HT PVB
211		GLASS	LAMINATED IG 1/4T - 7/16 LAMINATED HT-HT PVB
212		GLASS	LAMINATED IG 3/16T - 7/16 LAMINATED HT-HT SGP
213		GLASS	LAMINATED IG 1/4T - 7/16 LAMINATED HT-HT SGP

PRODUCT REVISED
as complying with the Florida Building Code
Acceptance No. 11-1018.14
Expiration Date 2/17/15
By Ishaq I. Chaya
Miami Dade Product Control

ANTHONY LYNN MILLER
LICENSE
No. 58705
STATE OF FLORIDA
PROFESSIONAL ENGINEER
10/11/11
A. LYNN MILLER, P.E.
P.E.# 58705

Revsd By:	Date:	Revisions:	
J.J.	10/11/11	C	NO CHANGE THIS SHEET
SMC	01/05/10	B	PER MIAMI DADE COMMENTS
SMC	11/16/09	A	PER MIAMI DADE COMMENTS
Drawn By: SMC	Date: 08/05/09	Checked By: RJA	Date:

1070 TECHNOLOGY DRIVE
NOKOMIS, FL 34275
P.O. BOX 1529
NOKOMIS, FL 34274

PGT®

Description: PARTS LIST
Title: SERIES 770 ALUMINUM SGD - LMI

Series/Model:	Scale:	Sheet:	Drawing No.	Rev:
SGD770	NTS	21 of 23	PGT0002	C

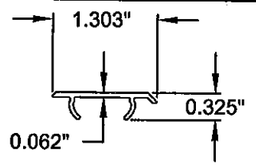

INTERLOCK SCREW COVER
(65) MAT'L: 6063-T6

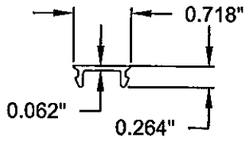

FRAME SCREW COVER
(5) MAT'L: 6063-T6

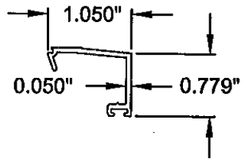

GLAZING BEAD (SINGLE)
(78) MAT'L: 6063-T6

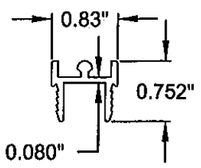

SILL TRACK
(11) MAT'L: 6063-T6

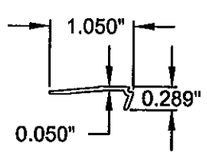

GLAZING BEAD (I.G.)
(79) MAT'L: 6063-T6

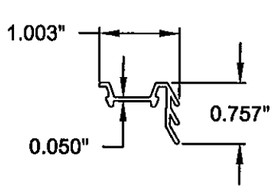

FIXED PANEL CLIP
(105) MAT'L: 6063-T6

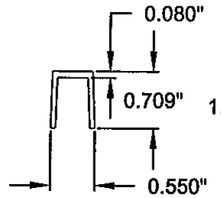

FIXED PANEL RETAINER
(106) MAT'L: 6063-T6

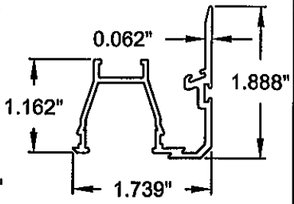

INTERLOCK
(62) MAT'L: 6063-T6

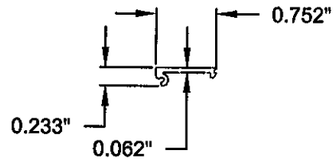

P-HOOK SCREW COVER
(29) MAT'L: 6063-T6

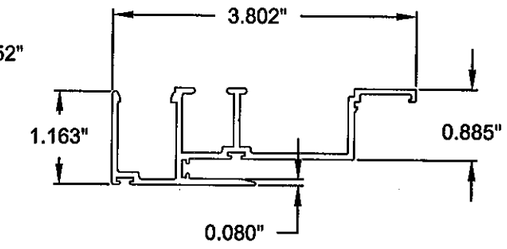

P-HOOK FOR BOX RISER
(30) MAT'L: 6063-T6

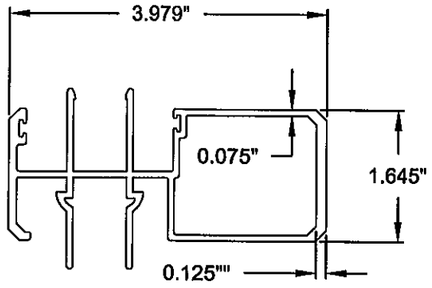

STANDARD ASTRAGAL
(67) MAT'L: 6063-T6

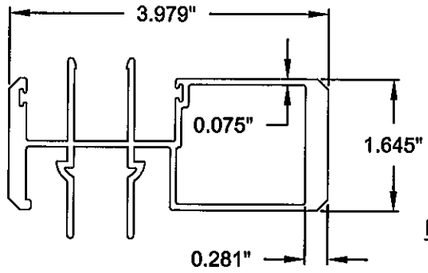

HEAVY DUTY ASTRAGAL
(68) MAT'L: 6063-T6

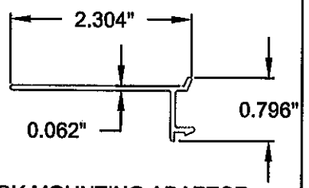

P-HOOK MOUNTING ADAPTOR
(28) MAT'L: 6063-T6

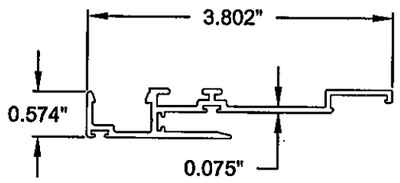

P-HOOK
(26) MAT'L: 6063-T6

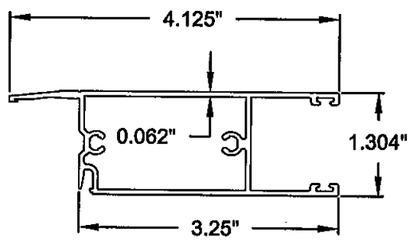

TOP/BOTTOM BOTTOM RAIL
(69) MAT'L: 6063-T6

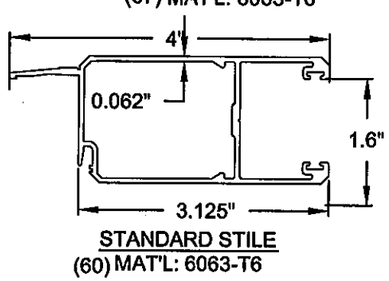

STANDARD STILE
(60) MAT'L: 6063-T6

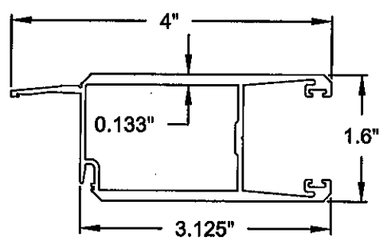

HEAVY DUTY STILE
(61) MAT'L: 6063-T6

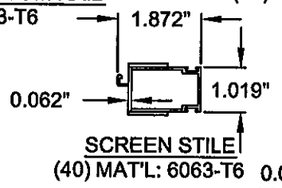

SCREEN STILE
(40) MAT'L: 6063-T6

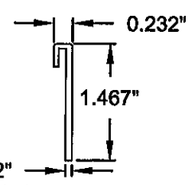

FLUSH FLAT SILL RISER
(18) MAT'L: 6063-T6

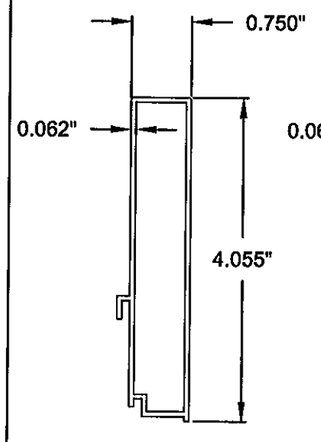

HIGH BOX SILL RISER
(24) MAT'L: 6063-T6

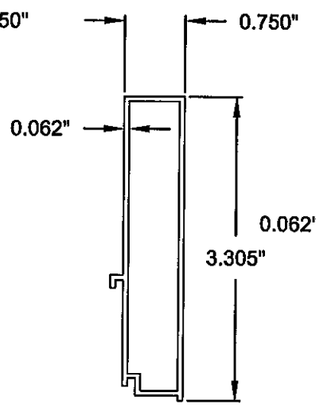

MEDIUM BOX SILL RISER
(23) MAT'L: 6063-T6

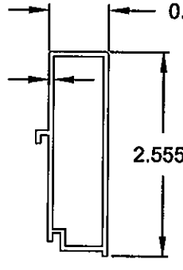

LOW BOX SILL RISER
(21) MAT'L: 6063-T6

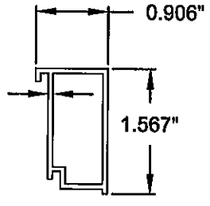

FLUSH BOX SILL RISER
(19) MAT'L: 6063-T6

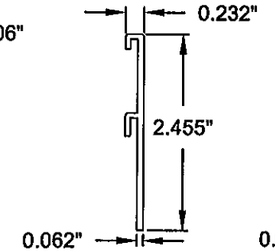

LOW FLAT SILL RISER
(20) MAT'L: 6063-T6

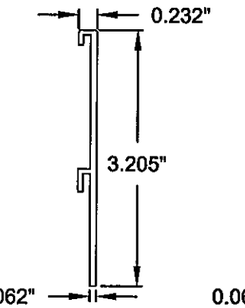

MED. FLAT SILL RISER
(22) MAT'L: 6063-T6

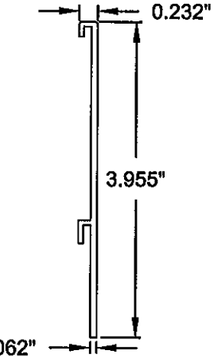

HIGH FLAT SILL RISER
(25) MAT'L: 6063-T6

PRODUCT REVISED
as complying with the Florida
Building Code
Acceptance No 11-1018.14
Expiration Date 2/17/15
By Ishas L. Haynes
Miami Dade Product Control

Revsd By:	Date:	Revisions:	
J.J.	10/11/11	C	NO CHANGE THIS SHEET
Revsd By:	Date:	Revisions:	
Revsd By:	Date:	Revisions:	
SMC	11/16/09	A	PER MIAMI DADE COMMENTS
Drawn By:	Date:	Checked By:	Date:
SMC	08/05/09	RJA	

1070 TECHNOLOGY DRIVE
NOKOMIS, FL 34275
P.O. BOX 1529
NOKOMIS, FL 34274

PGT®

Description: EXTRUSIONS
Title: SERIES 770 ALUMINUM SGD - LMI

Series/Model:	Scale:	Sheet:	Drawing No.	Rev:
SGD770	NTS	22 of 23	PGT0002	C

ANTHONY LYNN MILLER
LICENSE
No. 58705
STATE OF FLORIDA
PROFESSIONAL ENGINEER
A. LYNN MILLER, P.E.
P.E.# 58705

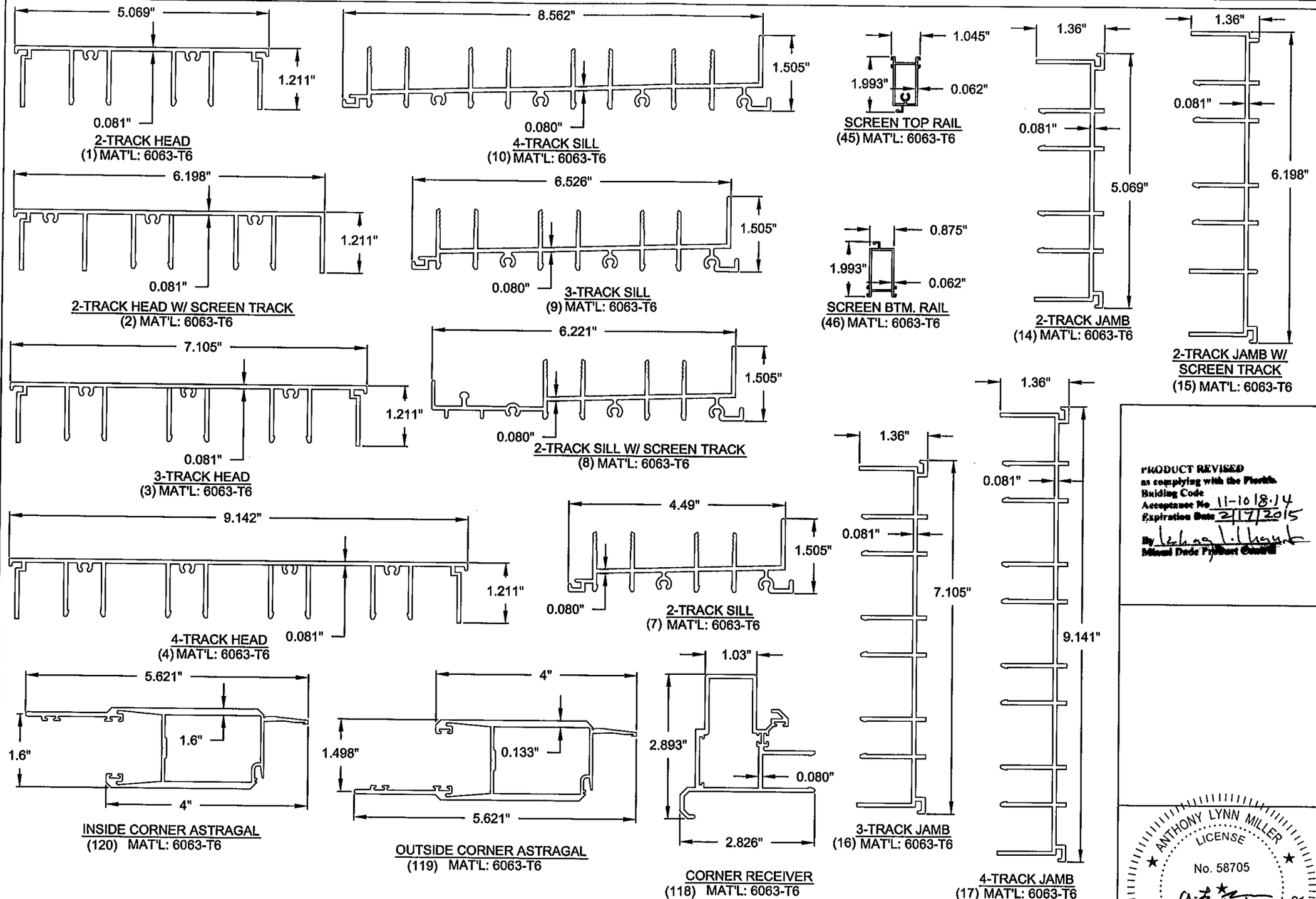

PRODUCT REVISED
as complying with the Florida
Building Code
Acceptance No 11-1018.14
Expiration Date 2/17/2015
By [signature]
Miami Dade Product Control

ANTHONY LYNN MILLER
LICENSE
No. 58705
10/11/11
STATE OF FLORIDA
PROFESSIONAL ENGINEER
A. LYNN MILLER, P.E.
P.E.# 58705

Revsd By:	Date:	Revisions:	
J.J.	10/11/11	C	NO CHANGE THIS SHEET
Revsd By:	Date:	Revisions:	
Revsd By: SMC	Date: 11/16/09	Revisions: A	PER MIAMI DADE COMMENTS
Drawn By: SMC	Date: 08/04/09	Checked By: RJA	Date:

1070 TECHNOLOGY DRIVE
NOKOMIS, FL 34275

P.O. BOX 1529
NOKOMIS, FL 34274

PGT®

Description: EXTRUSIONS

Title: SERIES 770 ALUMINUM SGD - LMI

Series/Model:	Scale:	Sheet:	Drawing No.	Rev:
SGD770	NTS	23 of 23	PGT0002	C