MIAMI-DADE COUNTY
DEPARTMENT OF PERMITTING, ENVIRONMENT, AND REGULATORY AFFAIRS (PERA)
BOARD AND CODE ADMINISTRATION DIVISION

NOTICE OF ACCEPTANCE (NOA)

MIAMI-DADE COUNTY
PRODUCT CONTROL SECTION
11805 SW 26 Street, Room 208
Miami, Florida 33175-2474
T (786) 315-2590 F (786) 315-2599
www.miamidade.gov/pera/

PGT Industries
1070 Technology Drive,
Nokomis, Fl. 34275

SCOPE:

This NOA is being issued under the applicable rules and regulations governing the use of construction materials. The documentation submitted has been reviewed and accepted by Miami-Dade County PERA -Product Control Section to be used in Miami Dade County and other areas where allowed by the Authority Having Jurisdiction (AHJ).

This NOA shall not be valid after the expiration date stated below. The Miami-Dade County Product Control Section (In Miami Dade County) and/or the AHJ (in areas other than Miami Dade County) reserve the right to have this product or material tested for quality assurance purposes. If this product or material fails to perform in the accepted manner, the manufacturer will incur the expense of such testing and the AHJ may immediately revoke, modify, or suspend the use of such product or material within their jurisdiction. PERA reserves the right to revoke this acceptance, if it is determined by Miami-Dade County Product Control Section that this product or material fails to meet the requirements of the applicable building code.

This product is approved as described herein, and has been designed to comply with the Florida Building Code, including the High Velocity Hurricane Zone.

DESCRIPTION: Series "SGD-770HP" Aluminum Sliding Glass Doors w / Reinforcements

APPROVAL DOCUMENT: Drawing No.**PGT0005 Rev C**, titled "Series 770 H.P. Aluminum SGD-SMI", sheets 1 through 10 of 10, prepared by manufacturer, dated 08/05/07 and last revised on 10/11/11, signed and sealed by Lynn Miller, P.E., bearing the Miami-Dade County Product Control Revision stamp with the Notice of Acceptance number and expiration date by the Miami-Dade County Product Control Section.

MISSILE IMPACT RATING: Small Missile Impact Resistant

Limitations:

1. See table 1in sheet 4 of this approved drawing set for applicable SGD unit sizes, design pressures, reinforcements, glass types, sill riser and anchors requirements.
2. Egress operable doors must comply with min clear width per FBC, as applicable.
3. All laminated glazing options are with Tempered glass, see glazing options on sheet 1 and 3.

LABELING: Each unit shall bear a permanent label with the manufacturer's name or logo, city, state and series and following statement: "Miami-Dade County Product Control Approved", unless otherwise noted herein.

RENEWAL of this NOA shall be considered after a renewal application has been filed and there has been no change in the applicable building code negatively affecting the performance of this product.

TERMINATION of this NOA will occur after the expiration date or if there has been a revision or change in the materials, use, and/or manufacture of the product or process. Misuse of this NOA as an endorsement of any product, for sales, advertising or any other purposes shall automatically terminate this NOA. Failure to comply with any section of this NOA shall be cause for termination and removal of NOA.

ADVERTISEMENT: The NOA number preceded by the words Miami-Dade County, Florida, and followed by the expiration date may be displayed in advertising literature. If any portion of the NOA is displayed, then it shall be done in its entirety.

INSPECTION: A copy of this entire NOA shall be provided to the user by the manufacturer or its distributors and shall be available for inspection at the job site at the request of the Building Official.

This NOA **revises NOA # 09-0826.11** and consists of this page 1 and evidence pages E-1, as well as approval document mentioned above.

The submitted documentation was reviewed by **Ishaq I. Chanda, P.E.**

MIAMI-DADE COUNTY APPROVED

11/22/11

NOTICE OF ACCEPTANCE: EVIDENCE SUBMITTED

A. DRAWINGS

1. Manufacturer's die drawings and sections (transferred from file **# 09-0826.10**).
2. Drawing No.**PGT0005 Rev C**, titled "Series 770 H.P. Aluminum SGD-SMI", sheets 1 through 10 of 10, prepared by manufacturer, dated 08/05/07 and last revised on 10/11/11, signed and sealed by Lynn Miller, P.E.

B. TESTS (transferred from file **# 09-0826.11**)

Test report on 1) Air Infiltration Test, per FBC, TAS 202-94
2) Uniform Static Air Pressure Test, per FBC, TAS 202-94
3) Water Resistance Test, per FBC, TAS 202-94.
4) Small Missile Impact Test per FBC, TAS 201-94
5) Cyclic Wind Pressure Loading per FBC, TAS 203-94
6) Forced Entry Test, per FBC 2411.3.2.1 (b) and TAS 202-94

Along with marked-up drawings and installation diagram of Aluminum Sliding Glass Doors, prepared by Fenestration Testing Laboratory, Inc., Test Report No **FTL-6019** and **FTL-6020, both** dated 08/10/09, all signed and sealed by Julio Gonzales, P.E.

Note: The test reports No. **FTL 6019** have been revised and reissued on 12/29/09, signed and sealed by Julio Gonzales, P.E.

C. CALCULATIONS

1. Statement letter dated OCT 11, 2011 of compliance to FBC 2007 & FBC 2010, prepared by PGT, signed & sealed by Lynn Miller, P.E.
2. Statement letter dated 10/07/11, Successor Engineer adopting the another engineer's work per FAR 61G15-27-001, signed & sealed by Lynn Miller, P.E.
3. Anchor verification and comparative analysis dated 08-24-09 and last revised on 12/15/09, prepared by PTC, LLC, Robert J. Amoruso, P.E.(transferred from file **# 09-0826.11**)
4. Glazing complies with ASTME-1300-02 &-04

D. QUALITY ASSURANCE

1. Miami Dade Department of Permitting, Environment, and Regulatory Affairs (PERA).

E. MATERIAL CERTIFICATIONS

1. Notice of Acceptance No. **11-0624.01** issued to "E.I. DuPont Denemours" for "DuPont Butacite ® PVB", expiring on 12/11/16.

F. STATEMENTS

1. Statement letter dated OCT 11, 2011 of compliance to FBC 2007 & FBC 2010 and "No financial interest", prepared by PGT, signed & sealed by Lynn Miller, P.E.
1. Statement letter of conformance to FBC 2007 and no financial interest, dated 08-19-09, signed by Robert J. Amoruso, P.E. (transferred from file **# 09-0826.11**)
2. Letter of lab compliance, part of the above test reports.

G. OTHER

1. This NOA **revises # 09-0826.11**, expiring March 24, 2015.
2. Test proposals No(s) **09-0177, 0177-A, B & C** approved by BCCO.

Ishaq I. Chanda

Ishaq I. Chanda, P.E.
Product Control Examiner
NOA No 11-1018.15
Expiration Date: March 24, 2015
Approval Date: December 01, 2011

GENERAL NOTES: SERIES 770 H.P. SMI SLIDING GLASS DOOR

DESIGN PRESSURE CHART (PSF)
SEE TABLES 1 & 1A, SHEET 4

1. GLAZING TYPE OPTIONS: (GLASS RECIPES ARE FROM EXTERIOR TO INTERIOR)
   GLASS STRENGTHS - T = TEMPERED HS = HEAT STRENGTHED
   INTERLAYER TYPES - DBPVB = .090 DUPONT BUTACITE PVB
   G7 - 7/16" LAMINATED: (2) LITES OF 3/16" T GLASS WITH AN .090 DBPVB.
   G7A - 9/16" LAMINATED: (2) LITES OF 1/4" T GLASS WITH AN .090 DBPVB.
   G8 - 1" LAMINATED I.G.: 3/16" T EXT. CAP + 3/8" AIR SPACE + 7/16" LAMINATED: (2) LITES OF 3/16" T GLASS WITH AN .090 DBPVB INTERLAYER.
   G8A - 1" LAMINATED I.G.: 1/4" T EXT. CAP + 5/16" AIR SPACE + 7/16" LAMINATED: (2) LITES OF 3/16" T GLASS WITH AN .090 DBPVB INTERLAYER.
2. DESIGN PRESSURES: A. NEGATIVE DESIGN LOADS BASED ON TESTED PRESSURE AND GLASS TABLES ASTM E 1300.
   B. POSITIVE DESIGN LOADS BASED ON WATER TEST PRESSURE AND GLASS TABLES ASTM E 1300.
3. ANCHORAGE: THE 33 1/3% STRESS INCREASE HAS NOT BEEN USED IN THE DESIGN OF THIS PRODUCT. MATERIALS, INCLUDING BUT NOT LIMITED TO STEEL SCREWS, THAT COME INTO CONTACT WITH OTHER DISSIMILAR MATERIALS SHALL MEET THE REQUIREMENTS OF THE FLORIDA BUILDING CODE. FOR ANCHORAGE DETAILS SEE SHEETS 4 THROUGH 6.
4. SHUTTERS ARE NOT REQUIRED 30' ABOVE GRADE.
5. INSTALLATION SCREWS, FRAME AND PANEL CORNERS TO BE SEALED WITH NARROW JOINT SEALANT.
6. REFERENCES: TEST REPORTS FTL-6019 AND FTL-6020, DATED 8/7/09.
   ELCO TEXTRON NOA: 07-0425.01, 03-0225.05, ANSI/AF&PA NDS-2005 FOR WOOD CONSTRUCTION AND ADM-2005 ALUMINUM DESIGN MANUAL
7. THIS PRODUCT HAS BEEN DESIGNED & TESTED TO COMPLY WITH THE REQUIREMENTS OF THE FLORIDA BUILDING CODE, INCLUDING THE HIGH VELOCITY HURRICANE ZONE (HVHZ).
8. DOOR SIZES MUST BE VERIFIED FOR COMPLIANCE WITH EGRESS REQUIREMENTS PER FLORIDA BUILDING CODE, AS APPLICABLE.
9. CONFIGURATIONS: STRAIGHT DOORS - MAXIMUM 2 TRACKS BY 9 FT. (108") HIGH WITH A MAXIMUM OF FOUR 4 FT. NOMINAL WIDE DOOR PANELS.
   SEE EXAMPLE ELEVATIONS AND PANEL CONFIGURATIONS ON SHEET 7.
   D.L.O. WIDTH = NOMINAL PANEL WIDTH - 7"
   D.L.O. HEIGHT = NOMINAL PANEL HEIGHT - 8.25"

NOTES PERTAINING TO ANCHORAGE DETAILS ON SHEET 5-6:

1. FOR CONCRETE APPLICATIONS IN MIAMI-DADE COUNTY, USE ONLY MIAMI-DADE COUNTY APPROVED ELCO 1/4" OR 5/16" ULTRACON (FORMERLY TAPCON) CONCRETE SCREWS OR 1/4" ELCO SS4 CRETE-FLEX . SEE TABLE ON THIS SHEET FOR EMBEDMENT, EDGE DISTANCE AND SUBSTRATE REQUIREMENTS.
2. FOR WOOD APPLICATIONS USE #12 STEEL SCREWS (G5). 1/4" ELCO SS4 CRETE-FLEX MAY BE USED INSTEAD OF #12 SCREWS.
3. WOOD BUCKS DEPICTED AS 1x ARE LESS THAN 1 1/2" THICK. 1x WOOD BUCKS ARE OPTIONAL IF UNIT IS INSTALLED DIRECTLY TO SOLID CONCRETE. WOOD BUCKS DEPICTED AS 2x ARE 1 1/2" THICK OR GREATER. 1X AND 2X BUCKS (WHEN USED) SHALL BE DESIGNED TO PROPERLY TRANSFER LOADS TO THE STRUCTURE. BUCK DESIGN AND INSTALLATION IS THE RESPONSIBILITY OF THE ENGINEER OR ARCHITECT OF RECORD.
4. FOR ATTACHMENT TO ALUMINUM: THE ALUMINUM SHALL BE A MINIMUM STRENGTH OF 6063-T5 AND A MINIMUM OF 1/8" THICK. THE ALUMINUM STRUCTURAL MEMBER SHALL BE OF A SIZE TO PROVIDE FULL SUPPORT TO THE DOOR FRAME SIMILAR TO THAT SHOWN IN THE DETAILS USING 2x WOOD BUCKS. THE ANCHORS SHALL BE #12 SHEET METAL SCREWS WITH FULL THREAD ENGAGEMENT INTO THE ALUMINUM. IF THESE CRITERIA ARE MET, THE FULL DESIGN PRESSURES USING ANCHORAGE REQUIREMENTS SHOWN IN TABLES 1, SHTS. 4, FOR ANCHOR TYPE 4 ARE ACCEPTABLE.
5. IF SILL IS TIGHT TO SUBSTRATE, GROUT OR OTHER MATERIAL IS NOT REQUIRED. IF USED, NON-SHRINK, NON-METALLIC GROUT, 3400 PSI MIN., (DONE BY OTHERS) MUST FULLY SUPPORT THE ENTIRE LENGTH OF THE SILL THAT IS NOT TIGHT TO THE SUBSTRATE, AND TRANSFER SHEAR LOAD TO SUBSTRATE. IF SUBSTRATE IS WOOD, 30# FELT PAPER OR MASTIC IS REQUIRED BETWEEN THE GROUT AND WOOD SUBSTRATE, OR AS APPROVED BY THE AUTHORITY HAVING JURISDICTION.

NOA DRAWING MAP

	SHEET
GENERAL NOTES	1
ELEVATIONS	2
GLAZING DETAILS	3
ANCHORAGE	4-6
DESIGN PRESSURES	4
ELEVATIONS	7
CONFIGURATIONS	7
VERT. SECTIONS	8
HORIZ. SECTIONS	8
PARTS LIST	9
EXTRUSIONS	10

PRODUCT REVISED
as complying with the Florida Building Code
Acceptance No. 11-1018.15
Expiration Date 3/24/2015
By Shang J. Chang
Miami Dade Product Control

Concrete Screw Anchorage Minimum Embedment and Minimum Edge Distance Requirements

		Head and Sill		Jambs			
		Concrete		Un-Grouted CMU		Grouted CMU	
Type	Dia.	Min. Emb.	Min. Ed	Min. Emb.	Min. Ed	Min. Emb.	Min. Ed
Elco Ultracon	1/4"	1 3/8	2 1/2	1 1/4	2 1/2	1 3/4	2 1/2
	5/16"	1 3/4	1 1/4	1 1/4	1 9/16	1 3/4	2 1/2
Elco Crete-Flex SS4	1/4"	1 3/4	2 1/2	1 1/4	2 1/2	Not Recommended	

Concrete Strength Requirements

Type	Dia.	fc'
Elco Ultracon	1/4"	2700 psi
	5/16"	3500 psi
Elco Crete-Flex SS4	1/4"	3350 psi

Masonry Strength Requirements

Ungrounted CMU	ASTM C-90
Grouted CMU	ASTM C-90 with grout conforming to Sections 2105.2.2.1.2 and R609 of the FBC.

Definitions:

Emb. = Embedment
Ed = Edge Distance
Min. = Minimum

CONCRETE SCREWS STRENGTHS:
Fy MIN. = 135 KSI
Fu MIN. = 177 KSI

Wood Screws (Head, Sill & Jambs) in.

Type	Min. Emb.	Min. Ed
#12 Wood Screw	1 3/8"	1"
Elco Crete-Flex SS4	1 3/8"	1"

UNLESS OTHERWISE NOTED

ANTHONY LYNN MILLER
LICENSE
No. 58705
10/12/11
STATE OF FLORIDA
PROFESSIONAL ENGINEER
A. LYNN MILLER, P.E.
P.E.# 58705

Revsd By:	Date:	Revisions:	
J.J.	10/12/11	C	FBC 2010 CODE CHANGE
SMC	02/23/10	B	PER MIAMI DADE COMMENTS
SMC	11/16/09	A	PER MIAMI DADE COMMENTS
Drawn By: SMC	Date: 08/05/07	Checked By: RJA	Date: RJA

1070 TECHNOLOGY DRIVE
NOKOMIS, FL 34275

P.O. BOX 1529
NOKOMIS, FL 34274

PGT®

Description: GENERAL NOTES AND MAP

Title: SERIES 770 H.P. ALUMINUM SGD - SMI

Series/Model:	Scale:	Sheet:	Drawing No.	Rev:
SGD770 H.P.	NTS	1 of 10	PGT0005	C

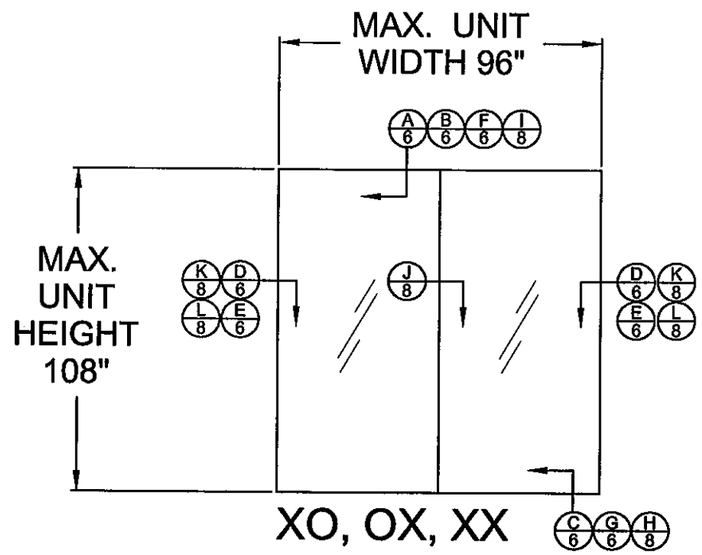

XO, OX, XX

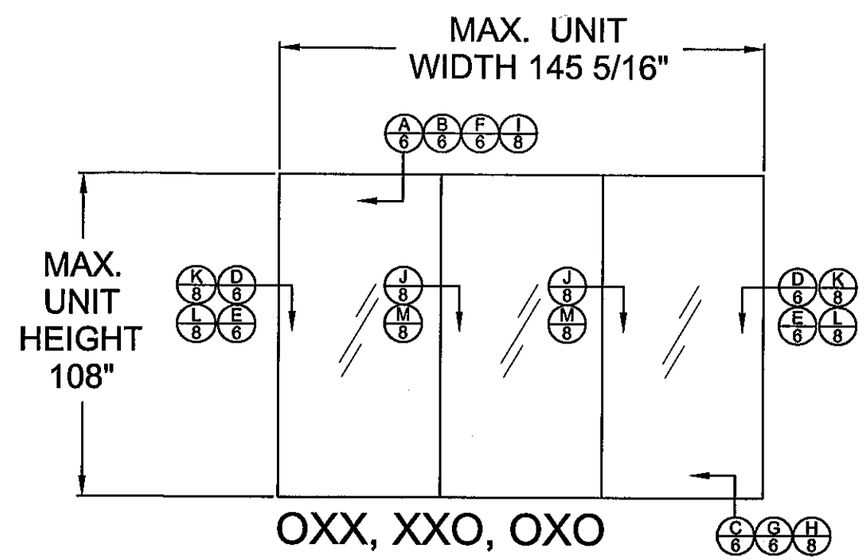

OXX, XXO, OXO

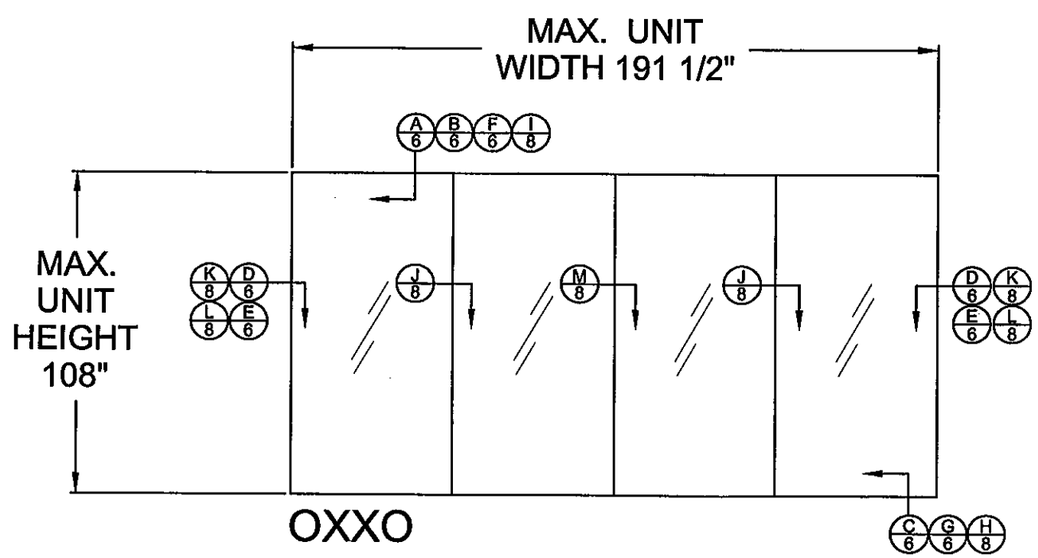

OXXO

APPROVED CONFIGURATIONS

PRODUCT REVISED
as complying with the Florida
Building Code
Acceptance No. 11-1018.15
Expiration Date 03/24/15
By Shang I. Chang
Miami Dade Product Control

Revsd By:	Date:	Revisions:	
J.J.	10/12/11	C	NO CHANGE THIS SHEET
SMC	02/23/10	B	PER MIAMI DADE COMMENTS
SMC	11/16/09	A	PER MIAMI DADE COMMENTS
Drawn By: SMC	Date: 08/05/09	Checked By: RJA	Date:

1070 TECHNOLOGY DRIVE
NOKOMIS, FL 34275

P.O. BOX 1529
NOKOMIS, FL 34274

PGT®

Description: ELEVATIONS

Title: SERIES 770 H.P. ALUMINUM SGD - SMI

Series/Model:	Scale:	Sheet:	Drawing No.	Rev:
SGD770 H.P.	NTS	2 of 10	PGT0005	C

ANTHONY LYNN MILLER
LICENSE
No. 58705
10/12/11
STATE OF
FLORIDA
PROFESSIONAL ENGINEER

A. LYNN MILLER, P.E.
P.E.# 58705

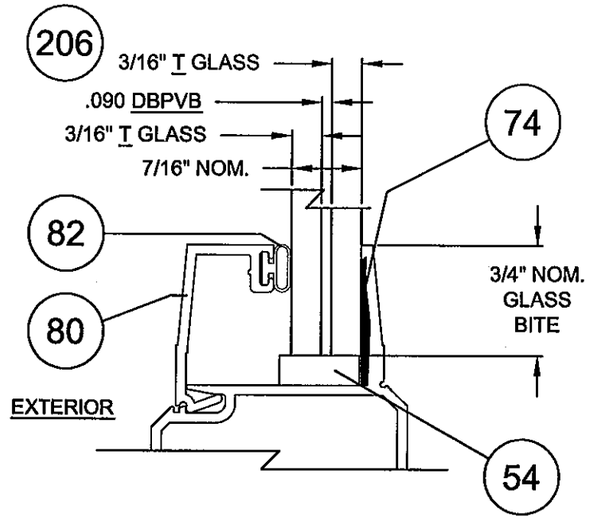

7/16" LAMINATED GLASS TYPES G7

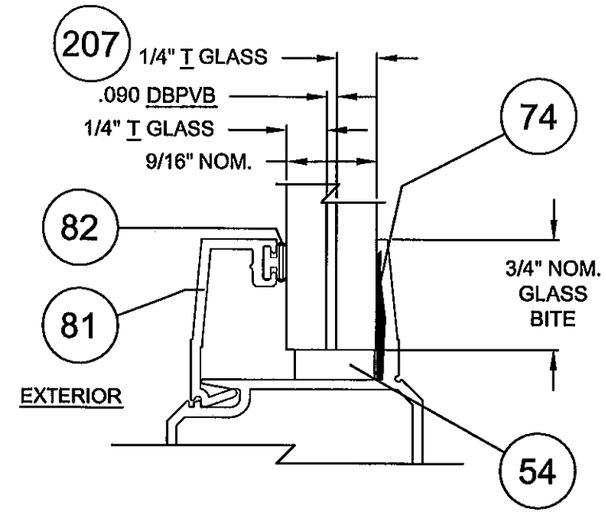

9/16" LAMINATED GLASS TYPES G7A

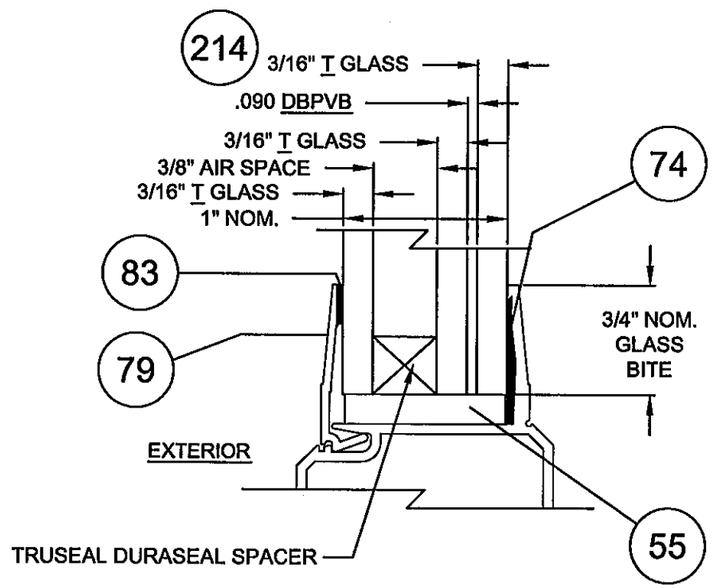

1" LAMINATED I.G. TYPES G8

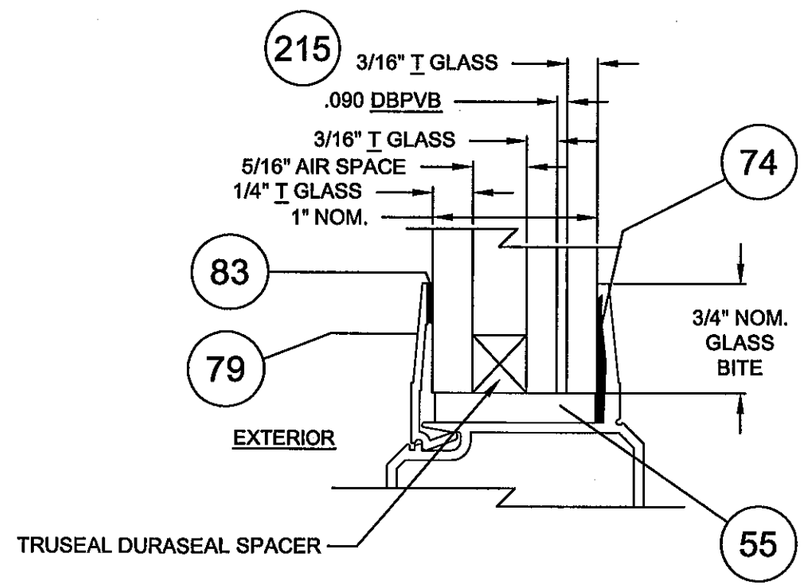

1" LAMINATED I.G. TYPES G8A

NOTE: DBPVB = DUPONT BUTACITE PVB

PRODUCT REVISED
as complying with the Florida
Building Code
Acceptance No 11-1018-05
Expiration Date 03/24/15
By Ishas J. Chan Jr
Miami Dade Product Control

ANTHONY LYNN MILLER
LICENSE
No. 58705
STATE OF FLORIDA
PROFESSIONAL ENGINEER
10/12/11
A. LYNN MILLER, P.E.
P.E.# 58705

Revsd By:	Date:	Revisions:	
J.J.	10/12/11	C	NO CHANGE THIS SHEET
SMC	02/23/10	B	PER MIAMI DADE COMMENTS
SMC	11/16/09	A	PER MIAMI DADE COMMENTS
Drawn By: SMC	Date: 08/05/09	Checked By: RJA	Date:

1070 TECHNOLOGY DRIVE
NOKOMIS, FL 34275
P.O. BOX 1529
NOKOMIS, FL 34274

PGT®

Description: GLAZING DETAILS
Title: SERIES 770 H.P. ALUMINUM SGD - SMI

Series/Model:	Scale:	Sheet:	Drawing No.	Rev:
SGD770 H.P.	NTS	3 of 10	PGT0005	C

DESIGN PRESSURE AND ANCHORAGE - HEAVY DUTY STILES - REINFORCED INTERLOCKS - HEAVY DUTY ASTRAGAL

TABLE 1.

> HEAD & SILL (H&S) INTERLOCK & STRAIGHT & CORNER ASTRAGAL CLUSTER PLUS INTERMEDIATE ANCHOR QTY. PER PANEL H & S,
> JAMB ANCHOR QTY.

G7 - 7/16" LAMINATED GLASS - (3/16" TEMP. / PVB / 3/16" TEMP.)
G7A - 9/16" LAMINATED GLASS - (1/4" TEMP. / PVB / 1/4" TEMP.)
G8 - 7/16" 1" LAMINATED I.G.U. - (3/16" TEMP / AIR / 3/16" TEMP. / PVB / 3/16" TEMP.)
G8A - 1" LAMINATED I.G.U. - (1/4" TEMP. / AIR / 3/16" TEMP. / PVB / 3/16" TEMP.)

Anchor Types:
1) *1/4" ELCO ULTRACON (FORMERLY TAPCON)
2) *1/4" SS4 CRETE-FLEX
3) *5/16" ULTRACON
4) *#12 STEEL SCREW (G5)
* SEE ANCHORAGE NOTES 1 & 2 ON SHEET 1.

NOM. PANEL WIDTH		FRAME SIDE	UNIT HEIGHT 80			84			90			96			102			108		
			1, 2 - CONC	3 - CONC	2, 4 - WOOD	1, 2 - CONC	3 - CONC	2, 4 - WOOD	1, 2 - CONC	3 - CONC	2, 4 - WOOD	1, 2 - CONC	3 - CONC	2, 4 - WOOD	1, 2 - CONC	3 - CONC	2, 4 - WOOD	1, 2 - CONC	3 - CONC	2, 4 - WOOD
GLASS TYPE - 7, 7A, 8, 8A			+90 -110.0			+90 -110.0			+90 -110.0			+90 -110.0			+90 -110.0			+90 -110.0		
24	Anchors	H&S	C6+2	C6+2	C6+2	C6+2	C6+2	C6+2	C6+2	C6+2	C6+2	C6+2	C6+2	C6+2	C6+2	C6+2	C6+2	C6+2	C6+2	C6+2
		JAMB	10	10	10	10	10	10	10	10	10	10	10	10	10	10	10	10	10	10
GLASS TYPE - 7, 7A, 8, 8A			+90 -110.0			+90 -110.0			+90 -110.0			+90 -110.0			+90 -110.0			+90 -110.0		
30	Anchors	H&S	C6+2	C6+2	C6+2	C6+2	C6+2	C6+2	C6+2	C6+2	C6+2	C6+2	C6+2	C6+2	C6+2	C6+2	C6+2	C6+2	C6+2	C6+2
		JAMB	10	10	10	10	10	10	10	10	10	10	10	10	10	10	10	10	10	10
GLASS TYPE - 7, 7A, 8, 8A			+90 -110.0			+90 -110.0			+90 -110.0			+90 -110.0			+90 -110.0			+90 -110.0		
36	Anchors	H&S	C6+2	C6+2	C6+2	C6+2	C6+2	C6+2	C6+2	C6+2	C6+2	C6+2	C6+2	C6+2	C6+2	C6+2	C6+2	C6+2	C6+2	C7+2
		JAMB	10	10	10	10	10	10	10	10	10	10	10	10	10	10	10	10	10	10
GLASS TYPE - 7, 7A, 8, 8A			+90 -110.0			+90 -110.0			+90 -110.0			+90 -110.0			+90 -110.0			+90 -110.0		
42	Anchors	H&S	C6+2	C6+2	C6+2	C6+2	C6+2	C6+2	C6+2	C6+2	C6+2	C6+2	C6+2	C7+2	C6+2	C6+2	C7+2	C6+2	C6+2	C8+2
		JAMB	10	10	10	10	10	10	10	10	10	10	10	10	10	10	12	10	10	12
GLASS TYPE - 7, 7A, 8, 8A			+90 -110.0			+90 -110.0			+90 -110.0			+90 -110.0			+90 -110.0			+90 -110.0		
48	Anchors	H&S	C6+2	C6+2	C6+3	C6+2	C6+2	C6+3	C6+2	C6+2	C7+3	C6+2	C6+2	C7+3	C6+2	C6+2	C8+3	C6+2	C6+2	C8+3
		JAMB	10	10	10	10	10	10	10	10	10	10	10	12	10	10	12	10	10	14

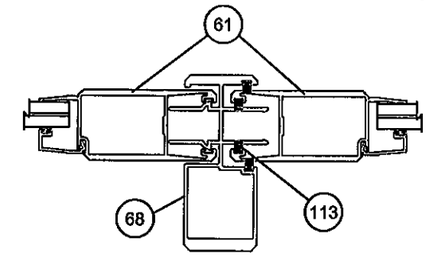

HEAVY DUTY ASTRAGAL
HEAVY DUTY STILES

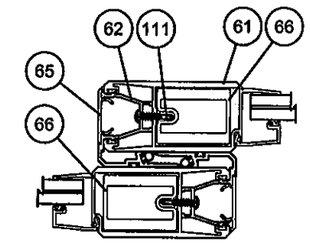

ALL INTERLOCKS TO BE REINFORCED

1. POSITIVE PRESSURES IN TABLE ARE BASED ON THE USE OF THE 4" SILL.
2. WHEN USING THE 2 1/2" SILL, POSITIVE DP IS 46.67 PSF MAX. AND WITH THE 3 1/4" SILL, POSITIVE PRESSURES IS 60.0 PSF MAX. (NEGATIVE PRESSURES UNCHANGED). SEE TABLE 1A ON THIS SHEET.
3. 2 1/2", 3 1/4" AND 4" SILL HEIGHTS ARE TESTED FOR WATER INFILTRATION WHEREAS THE 1 1/2" SILL IS NOT AND MUST ONLY BE USED WHERE WATER RESISTANCE IS NOT REQUIRED. POSITIVE DESIGN PRESSURES SHOWN IN TABLE 1 MAY BE USED WHEN THE DOOR IS PROTECTED BY AN OVERHANG COMPLYING WITH THE FLORIDA BUILDING CODE (SEE ADJACENT DIAGRAM); THIS CONDITION IS NOT RATED FOR WATER INFILTRATION.
4. SEE SHEET 6 FOR ANCHORAGE SPACING AND EMBEDMENT INFORMATION.
5. DOOR SIZE TO COMPLY WITH FBC EGRESS REQUIREMENTS.

DLO WIDTH = NOM. PANEL WIDTH - 7"
DLO HEIGHT = NOM. PANEL HEIGHT - 8.25"

TABLE 1A	
SILL HT. VS POS. DP	
SILL RISE HEIGHT	(+) DESIGN LOAD
FLUSH - 1-1/2"	N/A
LOW - 2-1/2"	+ 46.67 PSF
MED - 3-1/4"	+ 60.0 PSF
HIGH - 4"	+ 90.0 PSF
SEE NOTES 1-3	

◯ = EXAMPLE ON SHEET 5

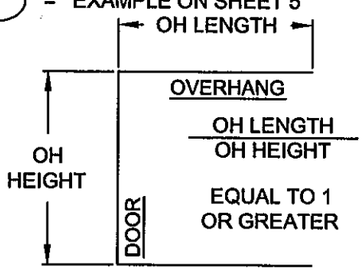

SEE NOTE 3

PRODUCT REVISED
as complying with the Florida Building Code
Acceptance No. 11-1018.05
Expiration Date 03/24/15
By Ishas L. Chandra
Miami Dade Product Control

ANTHONY LYNN MILLER
LICENSE
No. 58705
10/12/11
STATE OF FLORIDA
PROFESSIONAL ENGINEER
A. LYNN MILLER, P.E.
P.E.# 58705

Revsd By:	Date:	Revisions:	
J.J.	10/12/11	C	NO CHANGE THIS SHEET
SMC	02/23/10	B	PER MIAMI DADE COMMENTS
SMC	11/16/09	A	PER MIAMI DADE COMMENTS
Drawn By: SMC	Date: 8/5/09	Checked By:	Date:

1070 TECHNOLOGY DRIVE
NOKOMIS, FL 34275

P.O. BOX 1529
NOKOMIS, FL 34274

PGT®

Description: DP AND ANCHORAGE CHART

Title: SERIES 770 H.P. ALUMINUM SGD - SMI

Series/Model:	Scale:	Sheet:	Drawing No.	Rev:
SGD770 H.P.	NTS	4 of 10	PGT0005	C

ANCHORAGE REQUIREMENTS NOTES:

1. APPROVED ANCHOR TYPES: 1) 1/4" ELCO ULTRACON (FORMERLY TAPCON) 2) 1/4" ELCO SS4 CRETE-FLEX 3) 5/16" ULTRACON 4) #12 STEEL SCREW (G5)
2. ANCHOR LOCATION SPACING FOR ANCHOR QUANTITIES SPECIFIED IN TABLE 1 ON SHEET 4:

HEAD & SILL..... 8" MAX. FROM FRAME CORNERS. USE SPECIFIED CLUSTER FROM TABLE ON SHEET 4 AT EACH INTERLOCK AND ASTRAGAL LOCATION, PLUS SPECIFIED QUANTITY OF ADDITIONAL INTERMEDIATE ANCHORS PER PANEL (THE 8" FROM CORNER ANCHORS CAN BE INCLUDED). ADDITIONAL ANCHORS 24" MAX. ON CENTER.
SEE EXAMPLE ANCHORAGE PLANS BELOW AND EXAMPLE CLUSTERS AT ASTRAGAL / INTERLOCKS ON SHEET 6.

JAMBS..... 6" MAX. FROM BOTTOM AND 21" MAX. O.C. UTILIZING JAMB ANCHOR QUANTITIES FROM TABLE ON SHEET 4.

"ANCHORS PER PANEL" ARE THOSE AT THE HEAD AND SILL BETWEEN CLUSTERS OR THOSE BETWEEN A CLUSTER AND A FRAME JAMB.

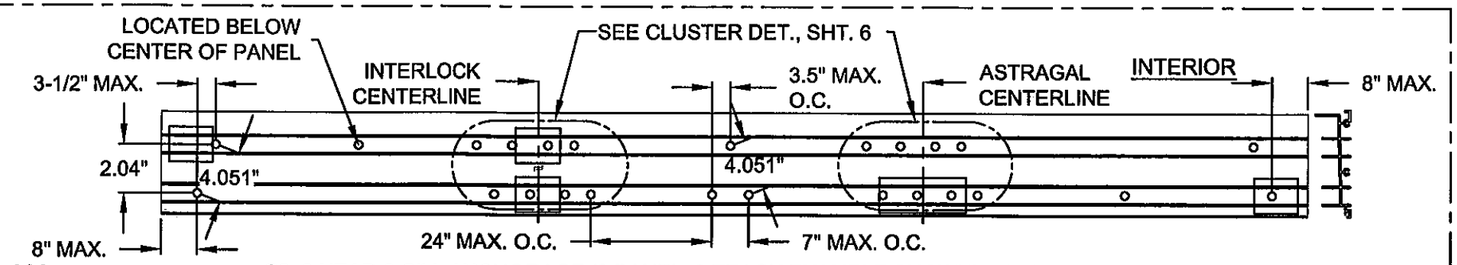

C8+3 HEAD & SILL ANCHORAGE (3 PANEL, 2-TRACK EXAMPLE SHOWN) = (25) ANCHORS TOTAL

EXAMPLE OXX ANCHORAGE PLAN:

(3) PANEL, 48" x 108" DOOR FROM TABLE ON SHEET 4, ANCHOR TYPES 2 & 4 IN WOOD SUBSTRATE

EXTERIOR

C8+3 = (36) ANCHORS TOTAL AT HEAD AND AT SILL

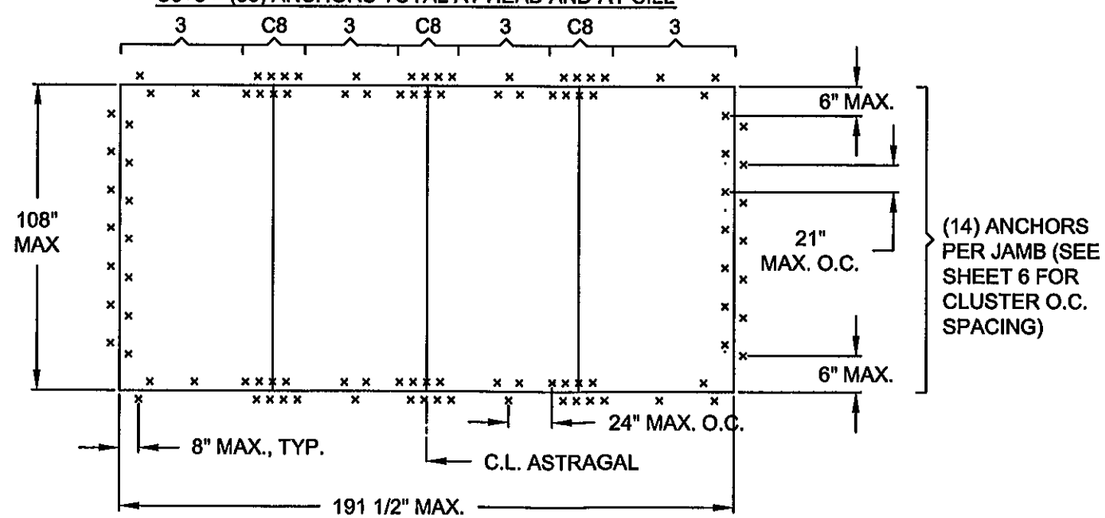

EXAMPLE OXXO ANCHORAGE PLAN:

(4) PANEL, 48" x 108" DOOR FROM TABLE ON SHEET 4, ANCHOR TYPES 2 & 4 IN WOOD SUBSTRATE

PRODUCT REVISED
as complying with the Florida Building Code
Acceptance No. 11-1018.05
Expiration Date 03/24/15
By Shang J. Chandra
Miami Dade Product Control

ANTHONY LYNN MILLER
LICENSE
No. 58705
10/12/11
STATE OF FLORIDA
PROFESSIONAL ENGINEER
A. LYNN MILLER, P.E.
P.E.# 58705

Revsd By:	Date:	Revisions:	
J.J.	10/12/11	C	NO CHANGE THIS SHEET
SMC	02/23/10	B	PER MIAMI DADE COMMENTS
SMC	11/16/09	A	PER MIAMI DADE COMMENTS
Drawn By: SMC	Date: 08/05/09	Checked By: RJA	Date:

1070 TECHNOLOGY DRIVE
NOKOMIS, FL 34275

P.O. BOX 1529
NOKOMIS, FL 34274

PGT®

Description: ANCHORAGE SPACING & EXAMPLE PLANS

Title: SERIES 770 H.P. ALUMINUM SGD - SMI

Series/Model:	Scale:	Sheet:	Drawing No.	Rev:
SGD770 H.P.	NTS	5 of 10	PGT0005	C

EXTERIOR INTERIOR
(ALL VERT. SECTIONS)

NOTE:
ALL DIMENSIONS SHOWN ARE BASED ON MINIMUM ALLOWED.

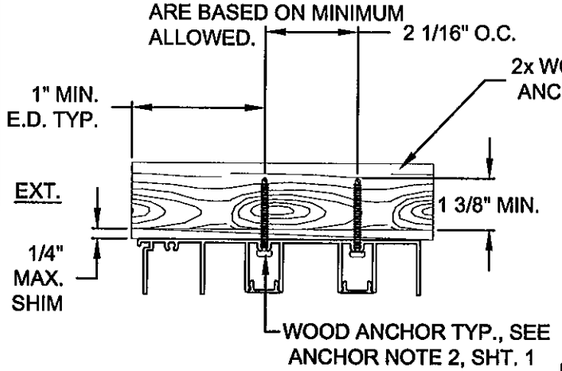

DETAIL A, 2-TRACK W/ SCREEN FRAME HEAD WOOD INSTALLATION

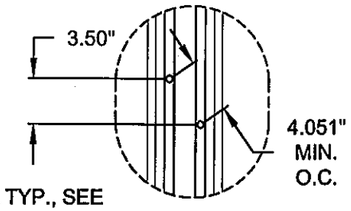

TYPICAL JAMB CLUSTER FOR DETAILS "D" & "E"

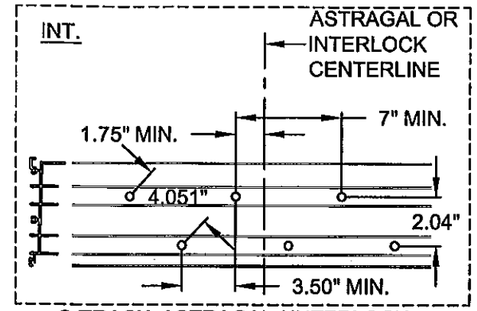

2-TRACK, ASTRAGAL / INTERLOCK 6 ANCHOR CLUSTER

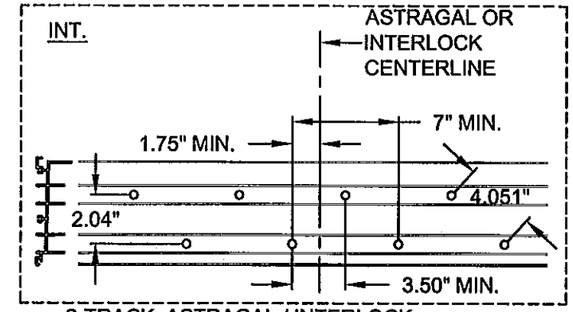

2-TRACK, ASTRAGAL / INTERLOCK 8 ANCHOR CLUSTER

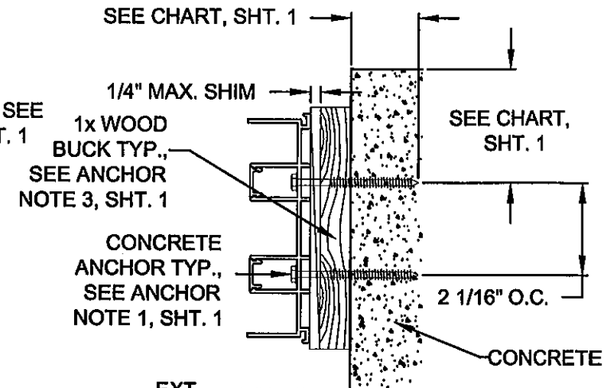

DETAIL D, 2-TRACK FRAME JAMB CONCRETE INSTALLATION

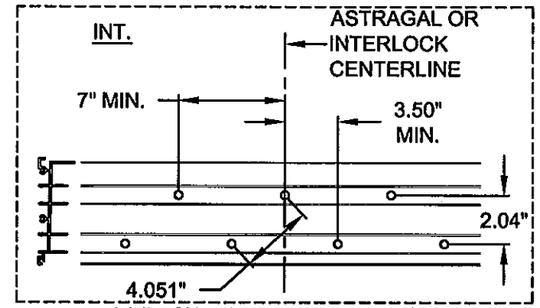

2-TRACK, ASTRAGAL / INTERLOCK ANCHOR CLUSTER - C7

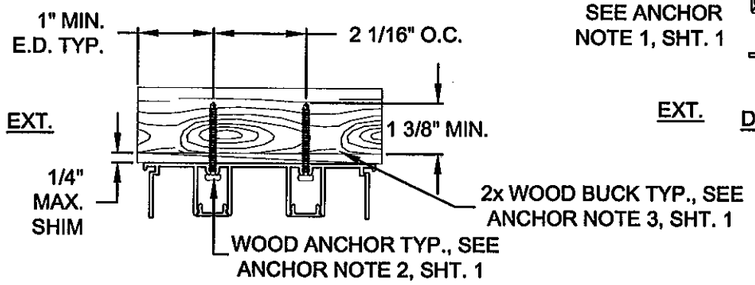

DETAIL B, 2-TRACK FRAME HEAD WOOD INSTALLATION

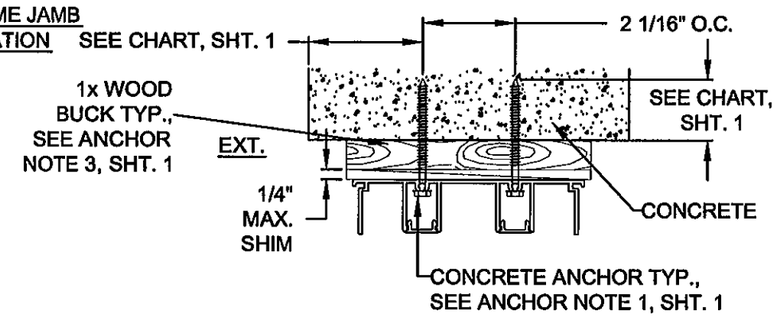

DETAIL F, 2-TRACK FRAME HEAD CONCRETE INSTALLATION

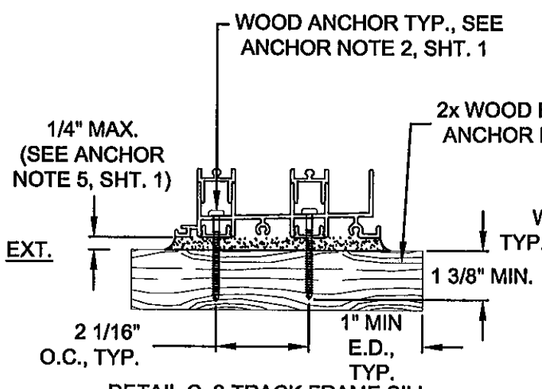

DETAIL C, 2-TRACK FRAME SILL WOOD INSTALLATION

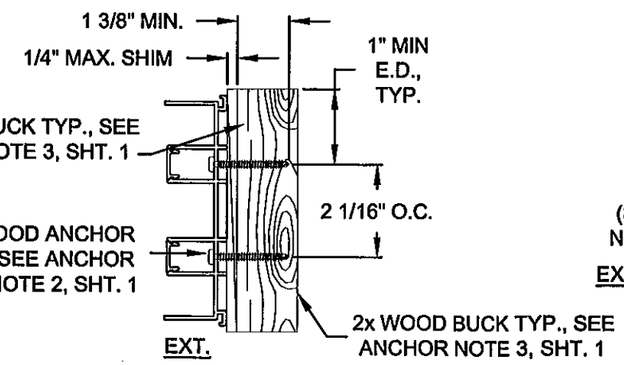

DETAIL E, 2-TRACK FRAME JAMB WOOD INSTALLATION

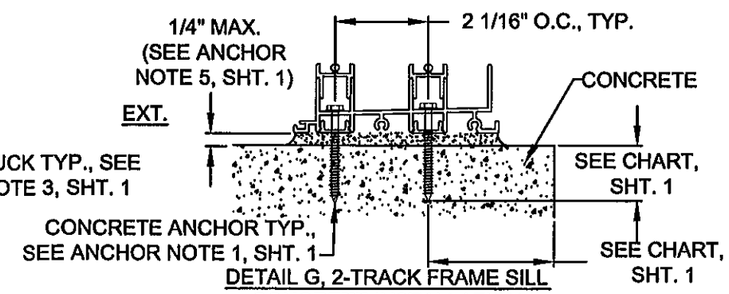

DETAIL G, 2-TRACK FRAME SILL CONCRETE INSTALLATION

PRODUCT REVISED
in complying with the Florida Building Code
Acceptance No. 11-1018.15
Expiration Date 03/24/15
By Shag L. Chand
Miami Dade Product Control

Revsd By:	Date:	Revisions:	
J.J.	10/12/11	C	NO CHANGE THIS SHEET
SMC	02/23/10	B	PER MIAMI DADE COMMENTS
SMC	11/16/09	A	PER MIAMI DADE COMMENTS
Drawn By: SMC	Date: 08/05/09	Checked By: RJA	Date:

1070 TECHNOLOGY DRIVE
NOKOMIS, FL 34275

P.O. BOX 1529
NOKOMIS, FL 34274

PGT®

Description: ANCHORAGE, EXAMPLE CLUSTERS

Title: SERIES 770 H.P. ALUMINUM SGD - SMI

Series/Model:	Scale:	Sheet:	Drawing No.	Rev:
SGD770 H.P.	NTS	6 of 10	PGT0005	C

ANTHONY LYNN MILLER
LICENSE
No. 58705
10/12/11
STATE OF FLORIDA
PROFESSIONAL ENGINEER

A. LYNN MILLER, P.E.
P.E.# 58705

PANEL LETTER		
K	SINGLE INTERLOCK	LOCKSTILE
A	SINGLE INTERLOCK	LOCKSTILE
D	LOCKSTILE	SINGLE INTERLOCK
M	LOCKSTILE	SINGLE INTERLOCK
L (BOX OUT)	SINGLE INTERLOCK	ASTRAGAL OUT
LR (BOX OUT)	ASTRAGAL OUT	SINGLE INTERLOCK
N (BOX OUT)	ASTRAGAL IN	SINGLE INTERLOCK
C (BOX IN)	SINGLE INTERLOCK	ASTRAGAL IN
P	SINGLE INTERLOCK	FIXED LOCKSTILE
R	FIXED LOCKSTILE	SINGLE INTERLOCK
T (BOX OUT)	ASTRAGAL OUT	FIXED LOCKSTILE
T (BOX IN)	ASTRAGAL IN	FIXED LOCKSTILE
S (BOX OUT)	FIXED LOCKSTILE	ASTRAGAL OUT
S (BOX IN)	FIXED LOCKSTILE	ASTRAGAL IN

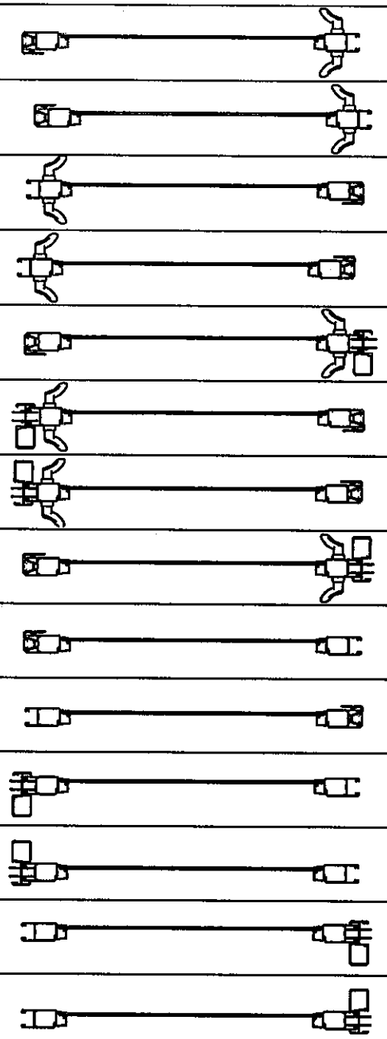

INTERIOR
(ALL PANEL TYPES)
EXTERIOR

NOTE:
REINFORCEMENT REQUIRED AT ALL INTERLOCKS.

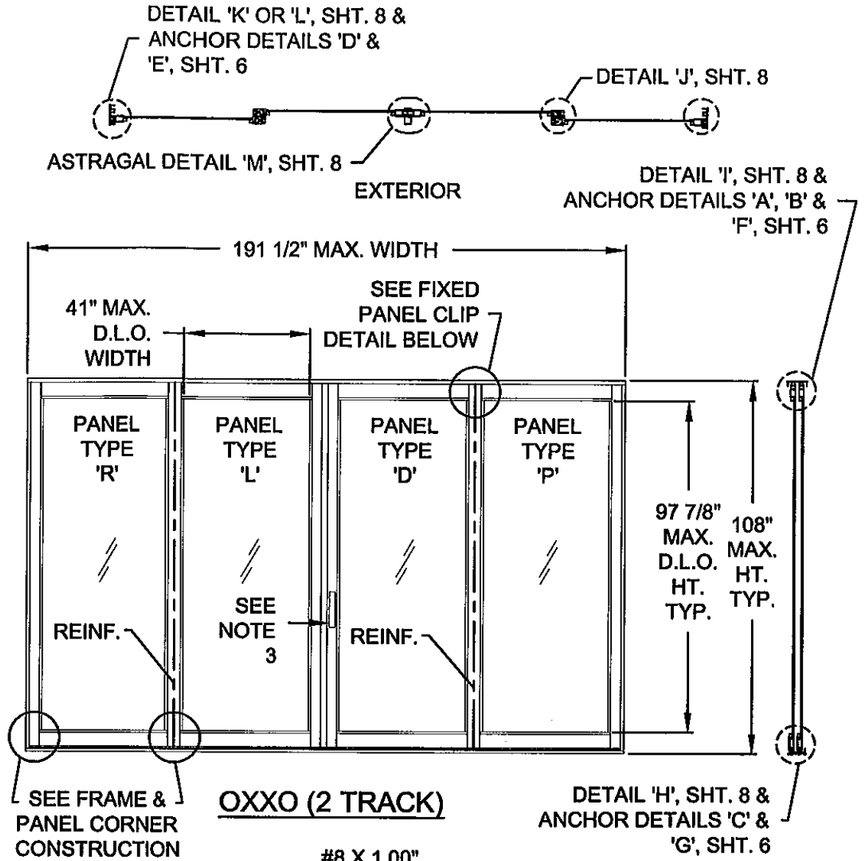

OXXO (2 TRACK)

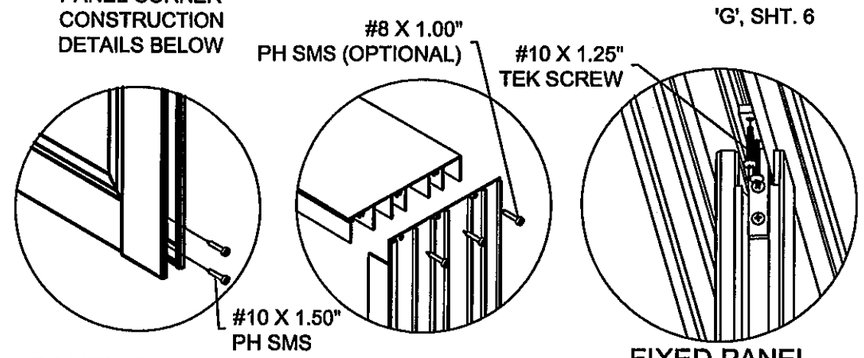

PANEL CORNER DETAIL

FRAME CORNER DETAIL

FIXED PANEL CLIP DETAIL
HEAD SHOWN, APPLICABLE TO SILL

NOTES: 1. SEE THIS SHEET FOR INDIVIDUAL PANEL CONFIGURATIONS. MAX. NOMINAL PANEL WIDTH = 48". SEE SHT. 8 FOR SECTION DETAILS AND SHTS. 4-6 FOR ANCHORAGE DETAILS.
2. MAX. DLO WIDTH = 41" MAX. MAX. DLO HEIGHT = 97 7/8" MAX.
3. (1) LOCK (ITEMS 75 & 107-110) AT EACH LOCKSTILE, LOCKING INTO KEEPER (ITEM 103) AT FRAME JAMB OR ASTRAGAL.

NOTE:
1. MAXIMUM NOMINAL PANEL WIDTH FOR ALL PANEL CONFIGURATIONS EQUALS 48"

PRODUCT REVISED
as complying with the Florida Building Code
Acceptance No. 11-1018.15
Expiration Date 03/24/15
By Ishaq I. Chaudhary
Miami Dade Product Control

ANTHONY LYNN MILLER
LICENSE
No. 58705
10/12/11
STATE OF FLORIDA
PROFESSIONAL ENGINEER
A. LYNN MILLER, P.E.
P.E.# 58705

Revsd By:	Date:	Revisions:	
J.J.	10/12/11	C	NO CHANGE THIS SHEET
SMC	02/23/10	B	PER MIAMI DADE COMMENTS
SMC	11/16/09	A	PER MIAMI DADE COMMENTS
Drawn By: SMC	Date: 08/05/09	Checked By: RJA	Date:

1070 TECHNOLOGY DRIVE
NOKOMIS, FL 34275
P.O. BOX 1529
NOKOMIS, FL 34274

PGT®

Description: PANEL TYPES / EXAMPLE ELEVATIONS
Title: SERIES 770 H.P. ALUMINUM SGD - SMI

Series/Model:	Scale:	Sheet:	Drawing No.	Rev:
SGD770 H.P.	NTS	7 of 10	PGT0005	C

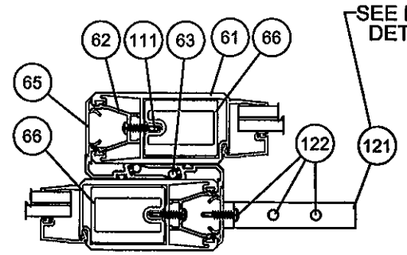

ALL REINFORCED INTERLOCK

DETAIL 'J'

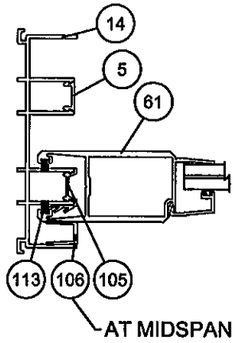

DETAIL 'K' (FIXED PANEL)

INTERIOR
(ALL HORIZ. SECTIONS)
EXTERIOR

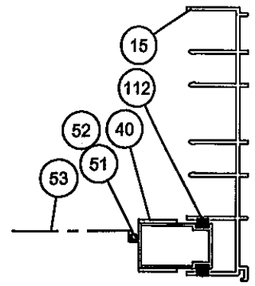

DETAIL 'P' SCREEN AT JAMB

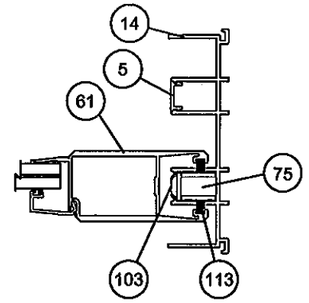

DETAIL 'L'

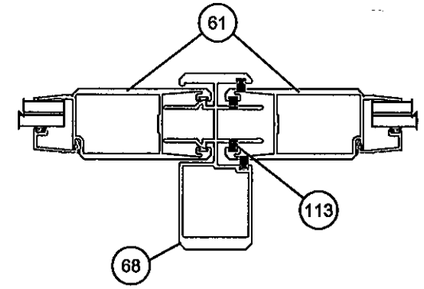

ASTRAGAL

DETAIL 'M'

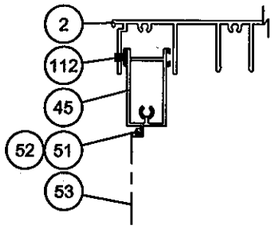

DETAIL 'N' SCREEN AT HEAD

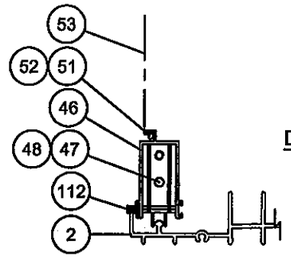

DETAIL 'O' SCREEN AT SILL

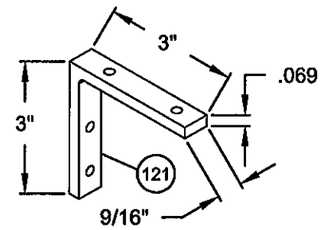

FIXED PANEL CLIP REQ'D AT TOP (HEAD) & BOTTOM (SILL) OF FIXED "O" PANELS. SEE SECTION "J" THIS SHT. & FIXED PANEL CLIP DETAIL ON SHT. 7

SILL RISERS OPTIONS

(SEE D.P. LIMIT TABLE 1A, SHEET 4)

EXTERIOR INTERIOR
(ALL VERT. SECTIONS)

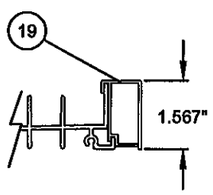

FLUSH BOX SILL RISER

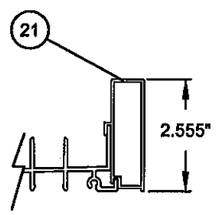

LOW BOX SILL RISER

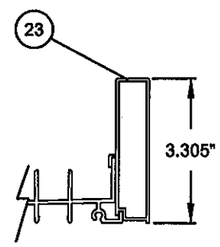

MEDIUM BOX SILL RISER

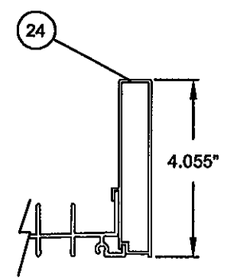

HIGH BOX SILL RISER

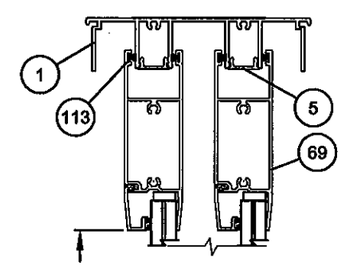

DETAIL 'I'

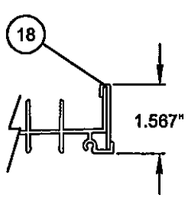

FLUSH FLAT SILL RISER

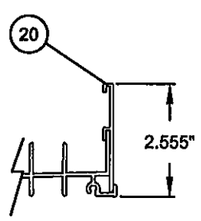

LOW FLAT SILL RISER

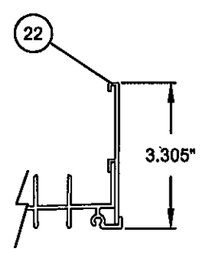

MEDIUM FLAT SILL RISER

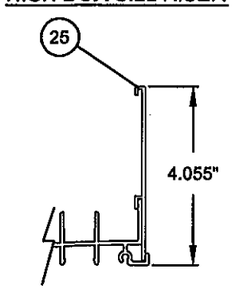

HIGH FLAT SILL RISER

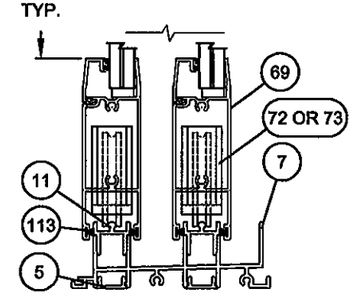

DETAIL 'H'

PRODUCT REVISED
as complying with the Florida
Building Code
Acceptance No 11-1018.15
Expiration Date 03/24/15
By Ishaq I. Chunde
Miami Dade Product Control

ANTHONY LYNN MILLER
LICENSE
No. 58705
10/12/11
STATE OF FLORIDA
PROFESSIONAL ENGINEER
A. LYNN MILLER, P.E.
P.E.# 58705

Revsd By:	Date:	Revisions:	
J.J.	10/12/11	C	NO CHANGE THIS SHEET
SMC	02/23/10	B	PER MIAMI DADE COMMENTS
SMC	11/16/09	A	PER MIAMI DADE COMMENTS
Drawn By: SMC	Date: 08/05/09	Checked By:	Date:

1070 TECHNOLOGY DRIVE
NOKOMIS, FL 34275

P.O. BOX 1529
NOKOMIS, FL 34274

PGT®

Description: VERTICAL & HORIZONTAL SECTION DETAILS

Title: SERIES 770 H.P. ALUMINUM SGD - SMI

Series/Model:	Scale:	Sheet:	Drawing No.	Rev:
SGD770 H.P.	NTS	8 of 10	PGT0005	C

ITEM	PGT Dwg. #	PGT. #	Description
1	17306	617306	2-TRACK HEAD
2	17303	617303	2-TRACK HEAD WITH SCREEN RAIL
5	17314	617314	FRAME SCREW COVER
6	17317	617317	FRAME HEAD/JAMB ADD-ON
7	17304	617304	2-TRACK SILL
8	17301	617301	2-TRACK SILL WITH SCREEN RAIL
14	17305	617305	2-TRACK JAMB
15	17302	617302	2-TRACK JAMB WITH SCREEN RAIL
18	17322	617322	SILL RISER - 0
19	17319	617319	SILL RISER - 0 HOLLOW
20	17321	617321	SILL RISER - LOW FLAT
21	17318	617318	SILL RISER - LOW HOLLOW
22	17355	617355	SILL RISER - MED FLAT
23	17354	617354	SILL RISER - MED HOLLOW
24	17320	617320	SILL RISER - HIGH HOLLOW
25	17323	617323	SILL RISER - HIGH FLAT

40	4319	612258	SCREEN SIDE RAIL - LOCKSTILE
41		7LOCKWGSK	SCREEN LOCKSET
42		41818	SCREEN KEEPER SPACER SET
43	8152	68152	SCREEN INTERLOCK ADAPTER
44	4428	64428	SCREEN DOUBLE INTERLOCK
45	4317	612256	SCREEN TOP RAIL
46	4318	612257	SCREEN BOTTOM RAIL
47	668	7SRAZ	STANDARD ROLLER
48	668	7SRAX	STANDARD ROLLER - ST. STL.
49	4344	64344	SCREEN ASTRAGAL
50	17349	617349	OXO SCREEN ASTRAGAL ADAPTER
51	1692	61692	SCREEN SPLINE - .165
52	1694	61694	SCREEN SPLINE - .150
53		61816C20	SCREEN CLOTH
54	1725		1/2" x 4" x 1/16" SITTING BLOCK
55	1726		1" X 4" X 1/16" SITTING BLOCK

206		GLASS	7/16 LAMI T-T PVB
207		GLASS	9/16 LAMI T-T PVB
214		GLASS	LAMI IG 3/16T - 7/16LAMI T-T PVB
215		GLASS	LAMI IG 1/4T - 7/16LAMI T-T PVB

ITEM	PGT Dwg. #	PGT. #	Description
61	17326	617326	PANEL STILE (HEAVY DUTY)
62	17327	617327	INTERLOCK ADAPTOR
63	1225	6TP248	VINYL BULB WSTP. - THIN (INSIDE INTERLOCK)
64	1729	71729	SILL END WEATHERSTRIP PAD
65	17328	617328	INTERLOCK SCREW COVER
66	17346	617346	INTERLOCK ALUM REINF.
68	17339	617339	HEAVY DUTY ASTRAGAL
69	17324	617324	TOP & BOTTOM RAIL
70	17350	417350	WEATHERSTRIP EXTENSION (INJECTION MOLDED)
71	1695	71695	1 1/2" X 1" X 3/4" HIGH FIN SEAL DUST PLUGS
72	8153	78153X	TANDEM ST. STL. ROLLER ASSY.
73	8153	78153N	TANDEM NYLON ROLLER ASSY.
74		SILICONE	DOW 899 OR 995
75	8185	78185X	GEMINI MORTICE LOCK W/LONG TRIM PLATE (3-PLY)
76		71032X1FPFX	#10-32 X 1" FL. SS SCREW W/ TYPE "F" TIP
77		7103239	10-32 STEEL ZINC U-NUT
79	17357	617357	1" IG BEAD HORIZONTAL
80	17359	617359	7/16 BEAD HORIZONTAL
81	17360	617360	9/16 BEAD HORIZONTAL
82	1224	6TP247K	VINYL BULB WEATHERSTRIP
83		IGTAPE	1/2"X 1/16" SINGLE SIDE ADHESIVE TAPE FOR IG BEAD

100	8052	48052	ROLLER ADJ. HOLE PLUG
101		72087	JAMB BUMPER
102	1696	71696	DUST PLUG
103	8186	78186X	1" KEEPER
104	653	7SDKEEP	SCREEN LOCK KEEPER
105	17344	617344	FIXED PANEL CLIP - 6" LONG
106	17352	617352	EXTERIOR FIXED PANEL RETAINER
107	1739	71739	HANDLE KIT - INTERIOR RAISED WITH THUMB TURN
108	1740	71740	HANDLE KIT - RAISED EXTERIOR HANDLE
109	1731	78162SN	HANDLE KIT - RECESSED INTERIOR WITH THUMB TURN
110	1732	78178	HANDLE KIT - RECESSED EXTERIOR PULL
111		710X34PPSDAX	#10 X 3/4" PH. PN. TEK - S.S.
112	1235	67S16	WSTP, .270 X .170 - FIN SEAL
113	1712	64066	.187 X .230 FINSEAL
114		710X115PPX	#10X 1 1/2"
115		710XPPT	#10X 1"
116		720X1X	#14-20 X 1" ST. STL.
117		720X112X	#14-20 X 1.5" ST. STL.
121	17353		"O" PANEL BRACKET
122			#10 x 1-1/4" TEK SCREW

PRODUCT REVISED
as complying with the Florida
Building Code
Acceptance No. 11-1018.15
Expiration Date 03/24/15
By [illegible]
Miami Dade Product Control

NOTE: ALL ALUMINUM = 6063-T6

ANTHONY LYNN MILLER
LICENSE
No. 58705
10/12/11
STATE OF FLORIDA
PROFESSIONAL ENGINEER
A. LYNN MILLER, P.E.
P.E.# 58705

Revsd By:	Date:	Revisions:	
J.J.	10/12/11	C	NO CHANGE THIS SHEET
SMC	02/23/10	B	PER MIAMI DADE COMMENTS
SMC	11/16/09	A	PER MIAMI DADE COMMENTS
Drawn By: SMC	Date: 08/05/09	Checked By: RJA	Date:

1070 TECHNOLOGY DRIVE
NOKOMIS, FL 34275

P.O. BOX 1529
NOKOMIS, FL 34274

Description: PARTS LIST

Title: SERIES 770 H.P. ALUMINUM SGD - SMI

Series/Model:	Scale:	Sheet:	Drawing No.	Rev:
SGD770 H.P.	NTS	9 of 10	PGT0005	C

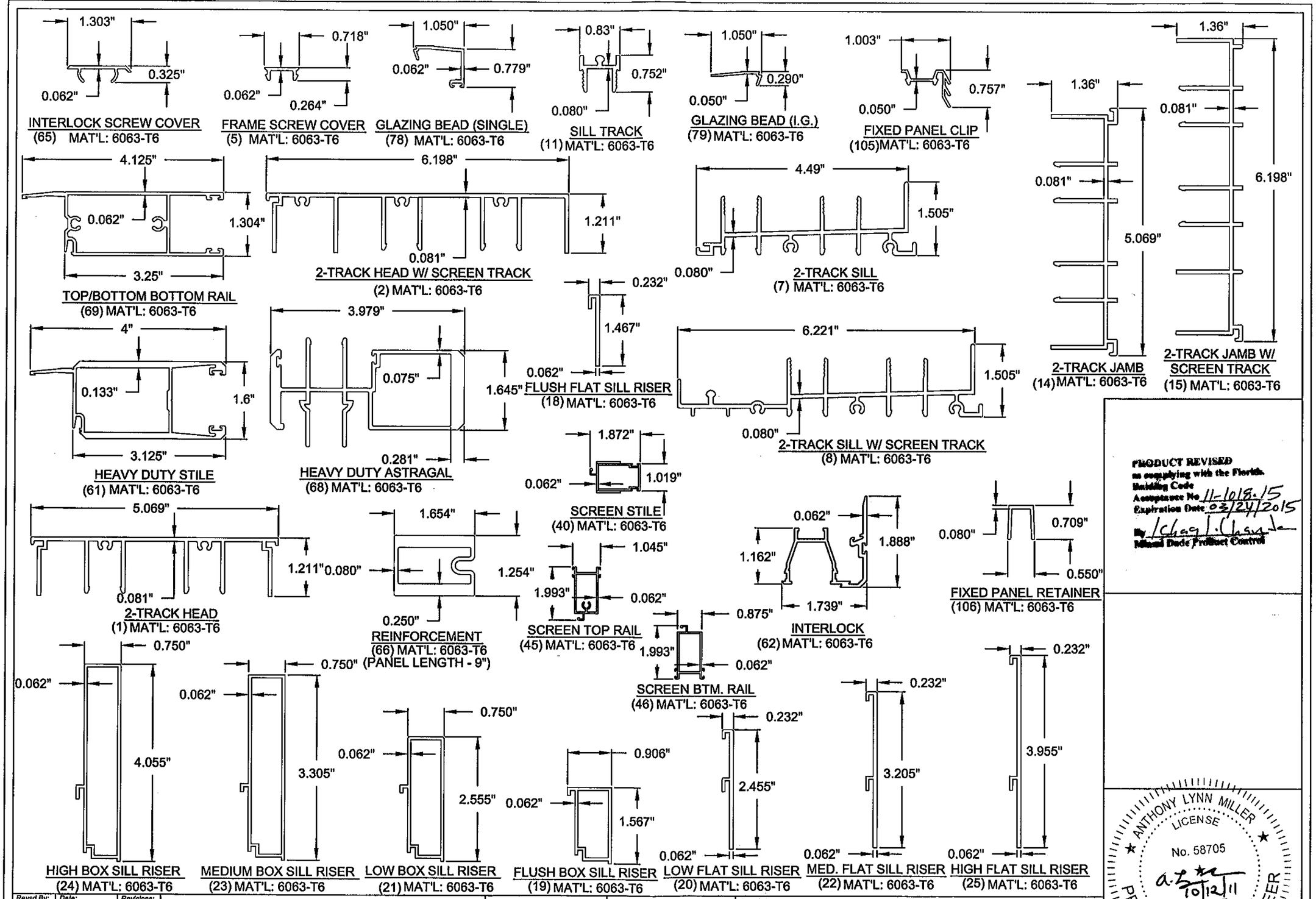

PRODUCT REVISED
as complying with the Florida Building Code
Acceptance No. 11-1018.15
Expiration Date 03/24/2015
By Chag L. Chang
Miami Dade Product Control

ANTHONY LYNN MILLER
LICENSE
No. 58705
10/12/11
STATE OF FLORIDA
PROFESSIONAL ENGINEER
A. LYNN MILLER, P.E.
P.E.# 58705

Revsd By:	Date:	Revisions:	
J.J.	10/12/11	C	NO CHANGE THIS SHEET
SMC	02/23/10	B	PER MIAMI DADE COMMENTS
SMC	11/16/09	A	PER MIAMI DADE COMMENTS
Drawn By: SMC	Date: 08/05/09	Checked By: RJA	Date:

1070 TECHNOLOGY DRIVE
NOKOMIS, FL 34275

P.O. BOX 1529
NOKOMIS, FL 34274

PGT®

Description: EXTRUSIONS

Title: SERIES 770 H.P. ALUMINUM SGD - SMI

Series/Model:	Scale:	Sheet:	Drawing No.	Rev:
SGD770 H.P.	NTS	10 of 10	PGT0005	C