MIAMI-DADE COUNTY
DEPARTMENT OF PERMITTING, ENVIRONMENT, AND REGULATORY AFFAIRS (PERA)
BOARD AND CODE ADMINISTRATION DIVISION

NOTICE OF ACCEPTANCE (NOA)

MIAMI-DADE COUNTY
PRODUCT CONTROL SECTION
11805 SW 26 Street, Room 208
Miami, Florida 33175-2474
T (786) 315-2590 F (786) 315-2599
www.miamidade.gov/pera/

PGT Industries
1070 Technology Drive,
Nokomis, Fl. 34275

SCOPE:

This NOA is being issued under the applicable rules and regulations governing the use of construction materials. The documentation submitted has been reviewed and accepted by Miami-Dade County PERA -Product Control Section to be used in Miami Dade County and other areas where allowed by the Authority Having Jurisdiction (AHJ).

This NOA shall not be valid after the expiration date stated below. The Miami-Dade County Product Control Section (In Miami Dade County) and/or the AHJ (in areas other than Miami Dade County) reserve the right to have this product or material tested for quality assurance purposes. If this product or material fails to perform in the accepted manner, the manufacturer will incur the expense of such testing and the AHJ may immediately revoke, modify, or suspend the use of such product or material within their jurisdiction. PERA reserves the right to revoke this acceptance, if it is determined by Miami-Dade County Product Control Section that this product or material fails to meet the requirements of the applicable building code.

This product is approved as described herein, and has been designed to comply with the Florida Building Code, including the High Velocity Hurricane Zone.

DESCRIPTION: Series "SGD-670" Aluminum Sliding Glass Doors w/ 90^0 corners -NI

APPROVAL DOCUMENT: Drawing No.**PGT0001 Rev C**, titled "Series 670 H.P. Alum SGD-NI", sheets 1 through 25 of 25, prepared by manufacturer, dated 08-05-07 and last revised on on 10/11/11, signed and sealed by Lynn Miller, P.E., bearing the Miami-Dade County Product Control Revision stamp with the Notice of Acceptance number and expiration date by the Miami-Dade County Product Control Section.

MISSILE IMPACT RATING: None: Approved Hurricane Protection devices, complying w/ FBC, as applicable are required.

Limitations:

1. All **90 degree** corners (inside or outside) Stiles require Heavy Duty Stiles.
2. See tables in sheets **6** through **11** of this approved drawing set for applicable SGD unit sizes, design pressures, standard or heavy duty stiles, glass types, sill riser and anchors requirements.
3. Egress operable doors must comply with min clear width per FBC, as applicable.

RENEWAL of this NOA shall be considered after a renewal application has been filed and there has been no change in the applicable building code negatively affecting the performance of this product.

TERMINATION of this NOA will occur after the expiration date or if there has been a revision or change in the materials, use, and/or manufacture of the product or process. Misuse of this NOA as an endorsement of any product, for sales, advertising or any other purposes shall automatically terminate this NOA. Failure to comply with any section of this NOA shall be cause for termination and removal of NOA.

ADVERTISEMENT: The NOA number preceded by the words Miami-Dade County, Florida, and followed by the expiration date may be displayed in advertising literature. If any portion of the NOA is displayed, then it shall be done in its entirety.

INSPECTION: A copy of this entire NOA shall be provided to the user by the manufacturer or its distributors and shall be available for inspection at the job site at the request of the Building Official.

This NOA **revises NOA # 09-0826.13** and consists of this page 1 and evidence pages E-1, as well as approval document mentioned above.

The submitted documentation was reviewed by **Ishaq I. Chanda, P.E.**

MIAMI-DADE COUNTY APPROVED

11/22/11

NOTICE OF ACCEPTANCE: EVIDENCE SUBMITTED

A. DRAWINGS

1. Manufacturer's die drawings and sections (transferred from file # **09-0826.13**).
2. Drawing No.**PGT0001 Rev C**, titled "Series 670 H.P. Alum SGD-NI", sheets 1 through 25 of 25, prepared by manufacturer, dated 08-05-07 and last revised on on 10/11/11, signed and sealed by Lynn Miller, P.E.

B. TESTS (transferred from file # **09-0826.13**)

1. Test report on 1) Air Infiltration Test, per FBC, TAS 202-94
   2) Uniform Static Air Pressure Test, per FBC, TAS 202-94
   3) Water Resistance Test, per FBC, TAS 202-94.
   4) Forced Entry Test, per FBC 2411.3.2.1 (b) and TAS 202-94

Along with marked-up drawings and installation diagram of Aluminum Sliding Glass Doors, prepared by Fenestration Testing Laboratory, Inc., Test Report No **FTL-5994, FTL-5997, FTL-6002, FTL-6034** & **FTL-6035**, dated 08/10/09, all signed & sealed by Julio Gonzales, P.E.

Note: Additional **reference** test Reports No(s)# **FTL 5980, FTL 6001** and **FTL 6015** have been revised and reissued on 12/29/09, signed and sealed by Julio Gonzales, P.E.

C. CALCULATIONS

1. Statement letter dated OCT 11, 2011, compliance to FBC 2007 & FBC 2010, prepared by PGT, signed & sealed by Lynn Miller, P.E.
2. Statement letter dated 10/07/11, Successor Engineer adopting the another engineer's work per FAR 61G15-27-001, signed & sealed by Lynn Miller, P.E.
3. Anchor verification and comparative analysis dated 08-19-09 and last revised on 03/16/09, prepared by PTC, LLC, Robert J. Amoruso, P.E. (transferred from file # **09-0826.13**)
3. Glazing complies with ASTME-1300-02 &-04

D. QUALITY ASSURANCE

1. Miami Dade Department of Permitting, Environment, and Regulatory Affairs (PERA).

E. MATERIAL CERTIFICATIONS

1. None

F. STATEMENTS

1. Statement letter dated OCT 11, 2011, compliance to FBC 2007 & FBC 2010 and "No financial interest", prepared by PGT, signed & sealed by Lynn Miller, P.E.
1. Statement letter of conformance to FBC 2007and no financial interest, dated 08-19-09, signed by Robert J. Amoruso, P.E. (transferred from file # **09-0826.13**)
2. Letter of lab compliance, part of the above test reports.

G. OTHER

1. This NOA **revises # 09-0826.13**, expiring April 07, 2015.
2. Test proposals No(s) # **09-0177, 0177-A, B & C** approved by BCCO..

Ishaq I. Chanda

Ishaq I. Chanda, P.E.
Product Control Examiner
NOA No 11-1018.17
Expiration Date: April 07, 2015
Approval Date: December 01, 2011

GENERAL NOTES: SERIES 670 N0N-IMPACT SLIDING GLASS DOOR

1. GLAZING TYPE OPTIONS: (GLASS RECIPES ARE FROM EXTERIOR TO INTERIOR)
   G1 - (1) LITE OF 3/16" TEMPERED GLASS.
   G1A - (1) LITE OF 1/4" TEMPERED GLASS.
   G2 - 1" INSULATING GLASS: (1) LITE OF 3/16" TEMPERED GLASS + 5/8" AIR SPACE + (1) LITE OF 3/16" TEMPERED GLASS.
   G2A - 1" INSULATING GLASS: (1) LITE OF 1/4" TEMPERED GLASS + 1/2" AIR SPACE + (1) LITE OF 1/4" TEMPERED GLASS.
2. DESIGN PRESSURES: A. NEGATIVE DESIGN LOADS BASED ON TESTED PRESSURE AND GLASS TABLES ASTM E 1300.
   B. POSITIVE DESIGN LOADS BASED ON WATER TEST PRESSURE AND GLASS TABLES ASTM E 1300.
3. ANCHORAGE: THE 33 1/3% STRESS INCREASE HAS NOT BEEN USED IN THE DESIGN OF THIS PRODUCT. MATERIALS, INCLUDING BUT NOT LIMITED TO STEEL SCREWS, THAT COME INTO CONTACT WITH OTHER DISSIMILAR MATERIALS SHALL MEET THE REQUIREMENTS OF THE FLORIDA BUILDING CODE. FOR ANCHORAGE DETAILS SEE SHEETS 6 THROUGH 14.
4. SHUTTERS ARE REQUIRED.
5. INSTALLATION SCREWS, FRAME AND PANEL CORNERS TO BE SEALED WITH NARROW JOINT SEALANT.
6. REFERENCES: TEST REPORTS FTL-5979, FTL-5994, FTL-6002, FTL-6034, FTL-6035, DATED 08/07/09.
   ELCO TEXTRON NOA: 07-0425.01, 03-0225.05, ANSI/AF&PA NDS-2005 FOR WOOD CONSTRUCTION AND ADM-2005 ALUMINUM DESIGN MANUAL
7. THIS PRODUCT HAS BEEN DESIGNED & TESTED TO COMPLY WITH THE REQUIREMENTS OF THE FLORIDA BUILDING CODE, INCLUDING THE HIGH VELOCITY HURRICANE ZONE (HVHZ).
8. DOOR SIZES MUST BE VERIFIED FOR COMPLIANCE WITH EGRESS REQUIREMENTS PER FLORIDA BUILDING CODE, AS APPLICABLE.
9. CONFIGURATIONS: SEE DP TABLES (SHEETS 6-8) AND CONFIGURATION ILLUSTRATIONS (SHEETS 2-4).
   D.L.O WIDTH = PANEL WIDTH - 7"
   D.L.O. HEIGHT = PANEL HEIGHT - 8.25"

DESIGN PRESSURE CHART
SEE TABLES 1, 2 & 3 ON SHEETS 6, 7 & 8

NOA DRAWING MAP

	SHEET
GENERAL NOTES	1
QUALIFIED CONFIG	2-4
GLAZING DETAILS	5
ANCHORAGE	6-14
DESIGN PRESSURES	6-8
ELEVATIONS	14-15
CONFIGURATIONS	16
VERT. SECTIONS	17
HORIZ. SECTIONS	18-19
PARTS LIST	20
EXTRUSIONS	21-22

NOTES PERTAINING TO ANCHORAGE DETAILS ON SHTS. 12-14:

1. FOR CONCRETE APPLICATIONS IN MIAMI-DADE COUNTY, USE ONLY MIAMI-DADE COUNTY APPROVED ELCO 1/4" OR 5/16" ULTRACON (FORMERLY TAPCON)CONCRETE SCREWS OR 1/4" ELCO SS4 CRETE-FLEX. SEE TABLE ON THIS SHEET FOR EMBEDMENT, EDGE DISTANCE AND SUBSTRATE REQUIREMENTS.
2. FOR WOOD APPLICATIONS USE #12 STEEL SCREWS (G5). 1/4" ELCO SS4 CRETE-FLEX MAY BE USED INSTEAD OF #12 SCREWS (PAN HEAD).
3. WOOD BUCKS DEPICTED AS 1x ARE LESS THAN 1 1/2" THICK. 1x WOOD BUCKS ARE OPTIONAL IF UNIT IS INSTALLED DIRECTLY TO SOLID CONCRETE. WOOD BUCKS DEPICTED AS 2x ARE 1 1/2" THICK OR GREATER. 1X AND 2X BUCKS (WHEN USED) SHALL BE DESIGNED TO PROPERLY TRANSFER LOADS TO THE STRUCTURE. BUCK DESIGN AND INSTALLATION IS THE RESPONSIBILITY OF THE ENGINEER OR ARCHITECT OF RECORD.
4. FOR ATTACHMENT TO ALUMINUM: THE ALUMINUM SHALL BE A MINIMUM STRENGTH OF 6063-T5 AND A MINIMUM OF 1/8" THICK. THE ALUMINUM STRUCTURAL MEMBER SHALL BE OF A SIZE TO PROVIDE FULL SUPPORT TO THE DOOR FRAME SIMILAR TO THAT SHOWN IN THE DETAILS USING 2x WOOD BUCKS. THE ANCHORS SHALL BE #12 SHEET METAL SCREWS WITH FULL THREAD ENGAGEMENT INTO THE ALUMINUM. IF THESE CRITERIA ARE MET, THE FULL DESIGN PRESSURES USING ANCHORAGE REQUIREMENTS SHOWN IN TABLES 1-3, SHTS. 6-8, FOR ANCHOR TYPE 4 ARE ACCEPTABLE.
5. IF SILL IS TIGHT TO SUBSTRATE, GROUT OR OTHER MATERIAL IS NOT REQUIRED. IF USED, NON-SHRINK, NON-METALLIC GROUT, 3400 PSI MIN., (DONE BY OTHERS) (MAX. 1/4" SHIM SPACE FOR GROUT) MUST FULLY SUPPORT THE ENTIRE LENGTH OF THE SILL THAT IS NOT TIGHT TO THE SUBSTRATE, AND TRANSFER SHEAR LOAD TO SUBSTRATE. IF SUBSTRATE IS WOOD, 30# FELT PAPER OR MASTIC IS REQUIRED BETWEEN THE GROUT AND WOOD SUBSTRATE, OR AS APPROVED BY THE AUTHORITY HAVING JURISDICTION.

Concrete Screw Anchorage Minimum Embedment and Minimum Edge Distance Requirements

		Head and Sill		Jambs			
		Concrete		Un-Grouted CMU		Grouted CMU	
Type	Dia.	Min. Emb.	Min. Ed	Min. Emb.	Min. Ed	Min. Emb.	Min. Ed
Elco Ultracon	1/4"	1 3/8	2 1/2	1 1/4	2 1/2	1 3/4	2 1/2
	5/16"	1 3/4	1 1/4	1 1/4	1 9/16	1 3/4	2 1/2
Elco Crete-Flex SS4	1/4"	1 3/4	2 1/2	1 1/4	2 1/2	Not Recommended	

		P-Hook (Anchor Tension)				P-Hook Mounting Adapter (Anchor Shear)			
		Concrete		Grouted CMU		Concrete		Grouted CMU	
Type	Dia.	Min. Emb.	Min. Ed	Min. Emb.	Min. Ed	Min. Emb.	Min. Ed	Min. Emb.	Min. Ed
Elco Ultracon	1/4"	1 3/4	2 1/2	1 3/4	2 1/2	1 3/4	2 1/2	1 3/4	1 1/4
Elco Crete-Flex SS4	1/4"	1 3/4	2 1/2	Not Recommended		1 3/4	2 1/2	Not Recommended	

Concrete Strength Requirements

Type	Dia.	fc'
Elco Ultracon	1/4"	2700 psi
	5/16"	3500 psi
Elco Crete-Flex SS4	1/4"	3350 psi

Definitions:

Emb. = Embedment
Ed = Edge Distance
Min. = Minimum

CONCRETE SCREWS STRENGTHS:
Fy MIN. = 135 KSI
Fu MIN. = 177 KSI

Masonry Strength Requirements

Ungrounted CMU	ASTM C-90
Grouted CMU	ASTM C-90 with grout conforming to Sections 2105.2.2.1.2 and R609 of the FBC.

Wood Screws (Head, Sill & Jambs) in.

Type	Min. Emb.	Min. Ed
#12 Wood Screw	1 3/8"	1"
Elco Crete-Flex SS4	1 3/8"	1"

UNLESS OTHERWISE NOTED

PRODUCT REVISED
to complying with the Florida Building Code
Acceptance No. 11-1018.17
Expiration Date 04/07/2015
By Ishaq I. Chanda
Miami Dade Product Control

ANTHONY LYNN MILLER
LICENSE
No. 58705
10/11/11
STATE OF FLORIDA
PROFESSIONAL ENGINEER
A. LYNN MILLER, P.E.
P.E.# 58705

Revsd By:	Date:	Revisions:	
J.J.	10/11/11	D	FBC 2010 CODE CHANGE
SMC	03/15/10	C	PER MIAMI DADE COMMENTS
SMC	03/01/10	B	PER MIAMI DADE COMMENTS
Drawn By: SMC	Date: 08/05/07	Checked By:	Date:

1070 TECHNOLOGY DRIVE
NOKOMIS, FL 34275
P.O. BOX 1529
NOKOMIS, FL 34274

PGT

Description: GENERAL NOTES AND MAP
Title: SERIES 670 ALUM. SGD - NON-IMPACT

Series/Model:	Scale:	Sheet:	Drawing No.	Rev:
SGD670	NTS	1 of 25	PGT0001	D

APPROVED CONFIGURATIONS:

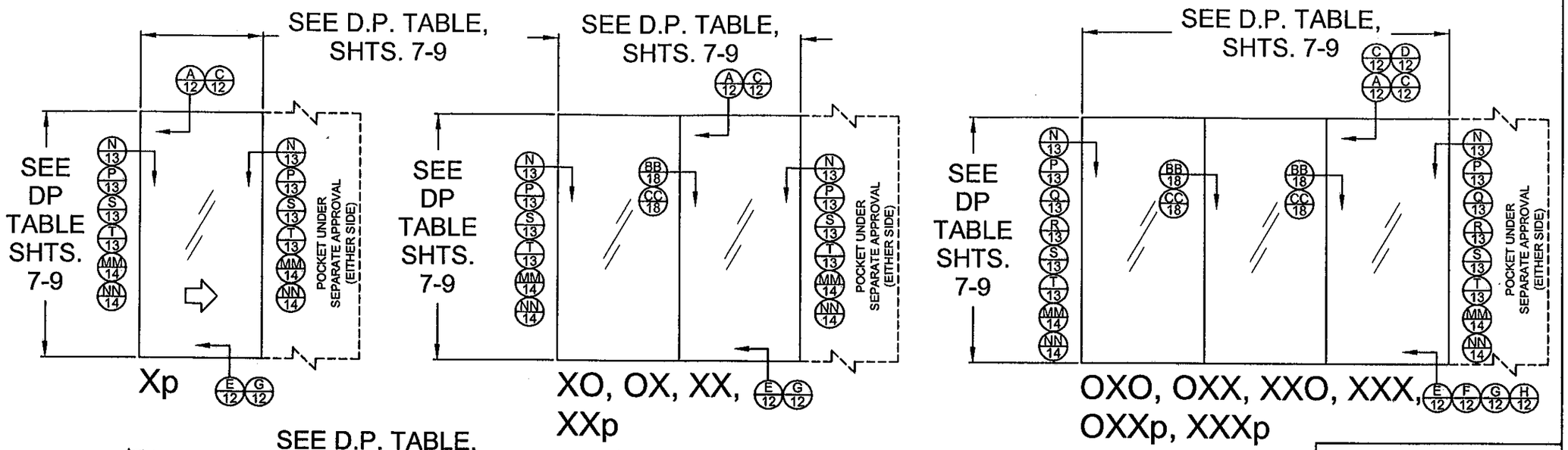

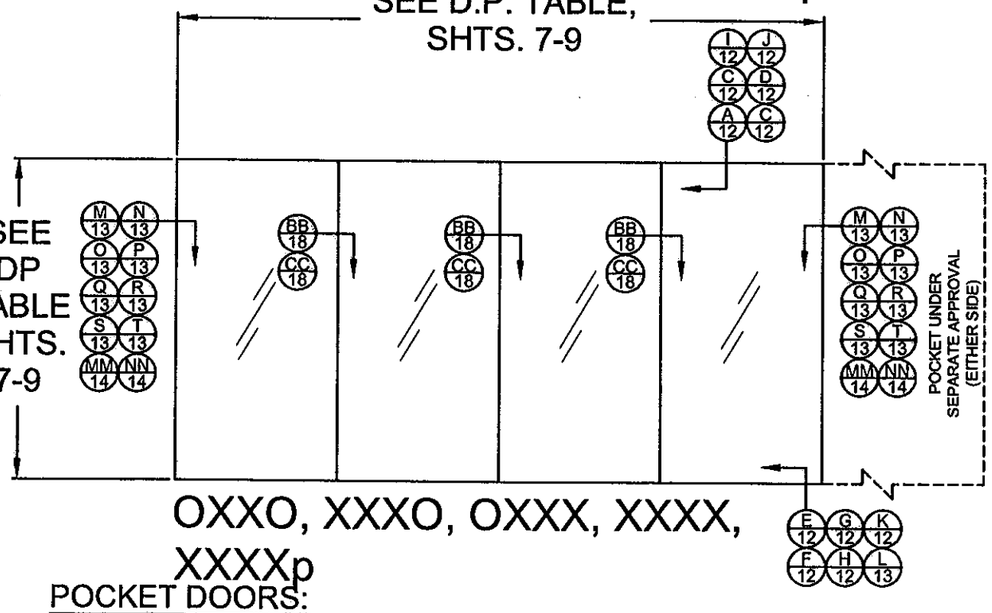

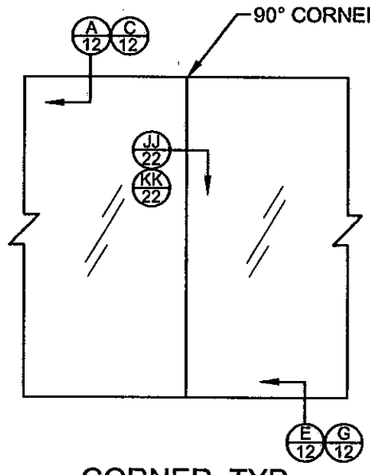

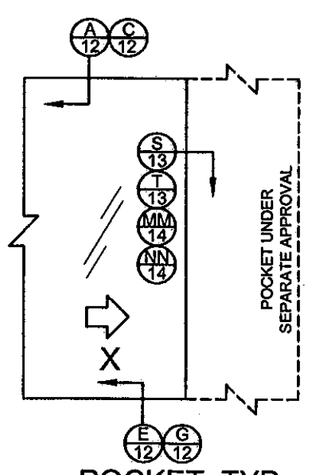

PRODUCT REVISED to complying with the Florida Building Code
Acceptance No. 11-1019.17
Expiration Date 4/7/15
By Shaq L. Chandler
Miami Dade Product Control

POCKET DOORS:

ALL CONFIGURATIONS SHOWN ALSO AVAILABLE AS POCKET DOORS AT EITHER JAMB LOCATION USING DETAIL "S" OR "T" INSTALLATION. EXAMPLE:
XXXX IN POCKET CONFIGURATION CAN BE pXXXXp, pXXXX OR XXXXp. OXXX IN POCKET CONFIGURATION CAN BE OXXXp. POCKET DOOR REQUIRES OPERABLE PANEL.
X SIGNIFIES OPERABLE PANEL, O SIGNIFIES INOPERABLE PANEL.

Revsd By:	Date:	Revisions:	
J.J.	10/11/11	D	NO CHANGE THIS SHEET
SMC	03/15/10	C	PER MIAMI DADE COMMENTS
SMC	03/01/10	B	PER MIAMI DADE COMMENTS
Drawn By: SMC	Date: 08/05/09	Checked By:	Date:

1070 TECHNOLOGY DRIVE
NOKOMIS, FL 34275
P.O. BOX 1529
NOKOMIS, FL 34274

Description: QUALIFIED CONFIGURATIONS
Title: SERIES 670 ALUM. SGD - NON-IMPACT

Series/Model:	Scale:	Sheet:	Drawing No.	Rev:
SGD670	NTS	2 of 25	PGT0001	D

ANTHONY LYNN MILLER LICENSE No. 58705 STATE OF FLORIDA PROFESSIONAL ENGINEER
10/11/11
A. LYNN MILLER, P.E.
P.E.# 58705

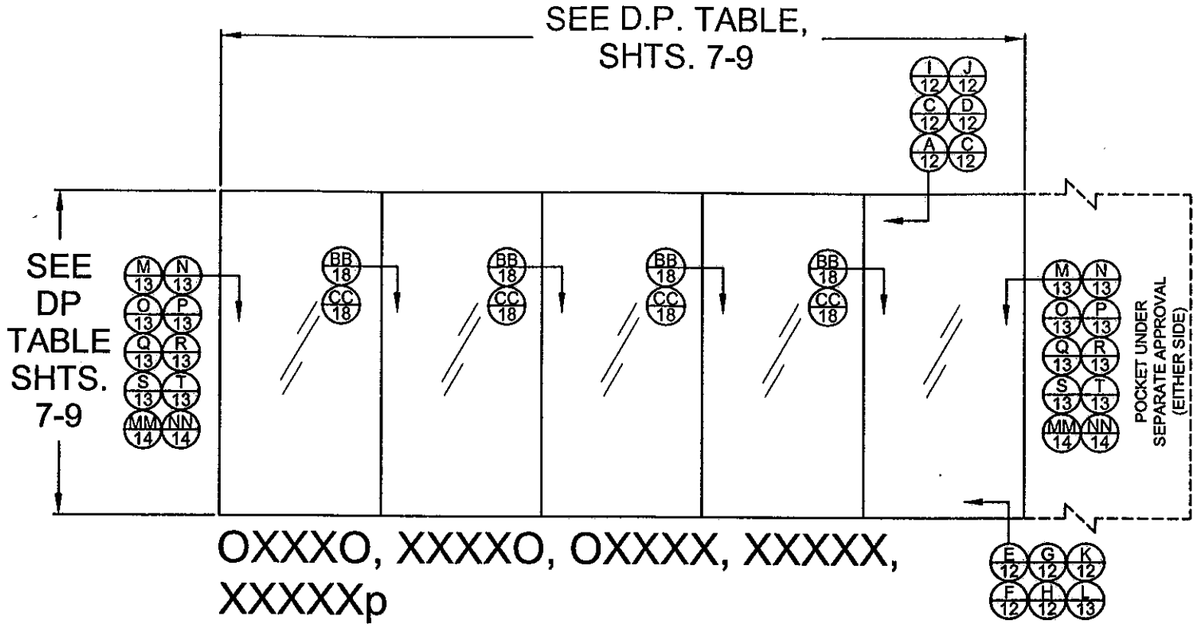

SEE 90° CORNER EXAMPLE AND POCKET DOOR NOTE ON SHEET 2

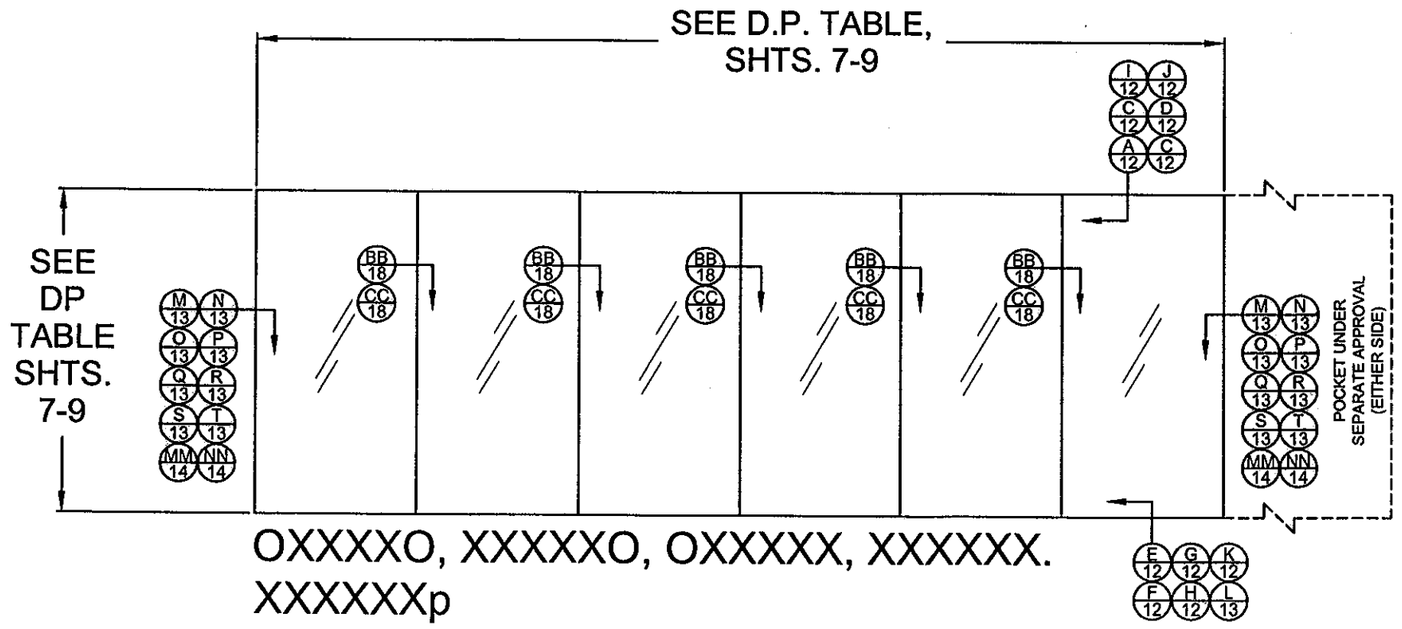

APPROVED CONFIGURATIONS

Revsd By:	Date:	Revisions:	
J.J.	10/11/11	D	NO CHANGE THIS SHEET
SMC	03/15/10	C	PER MIAMI DADE COMMENTS
SMC	03/01/10	B	PER MIAMI DADE COMMENTS
Drawn By: SMC	Date: 08/05/09	Checked By:	Date:

1070 TECHNOLOGY DRIVE
NOKOMIS, FL 34275
P.O. BOX 1529
NOKOMIS, FL 34274

Description: QUALIFIED CONFIGURATIONS

Title: SERIES 670 ALUM. SGD - NON-IMPACT

Series/Model:	Scale:	Sheet:	Drawing No.	Rev:
SGD670	NTS	3 of 25	PGT0001	D

PRODUCT REVISED to complying with the Florida Building Code
Acceptance No. 11-1018.17
Expiration Date: 4/7/15
By: Ishaq I. Chanda
Miami-Dade Product Control

ANTHONY LYNN MILLER LICENSE No. 58705 STATE OF FLORIDA PROFESSIONAL ENGINEER
A. LYNN MILLER, P.E.
P.E.# 58705

APPROVED CONFIGURATIONS:

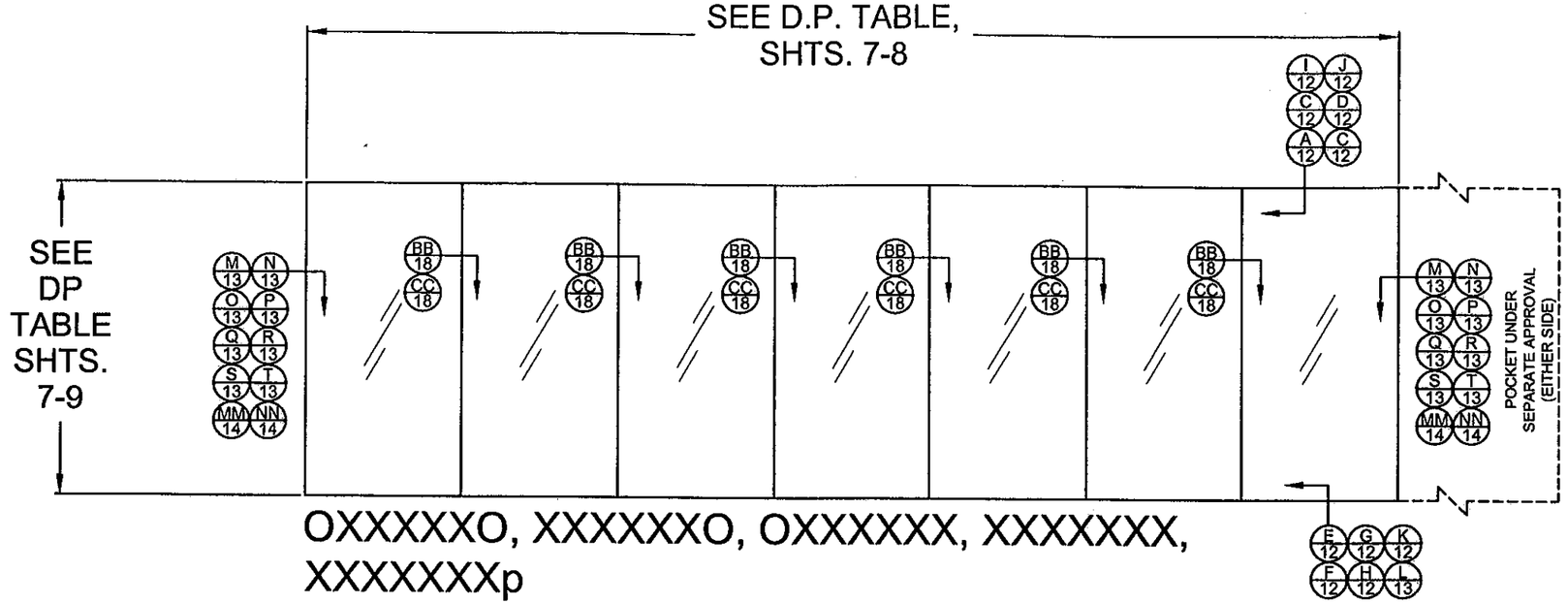

OXXXXXO, XXXXXXO, OXXXXXX, XXXXXXX, XXXXXXXp

SEE 90° CORNER EXAMPLE AND POCKET DOOR NOTE ON SHEET 2

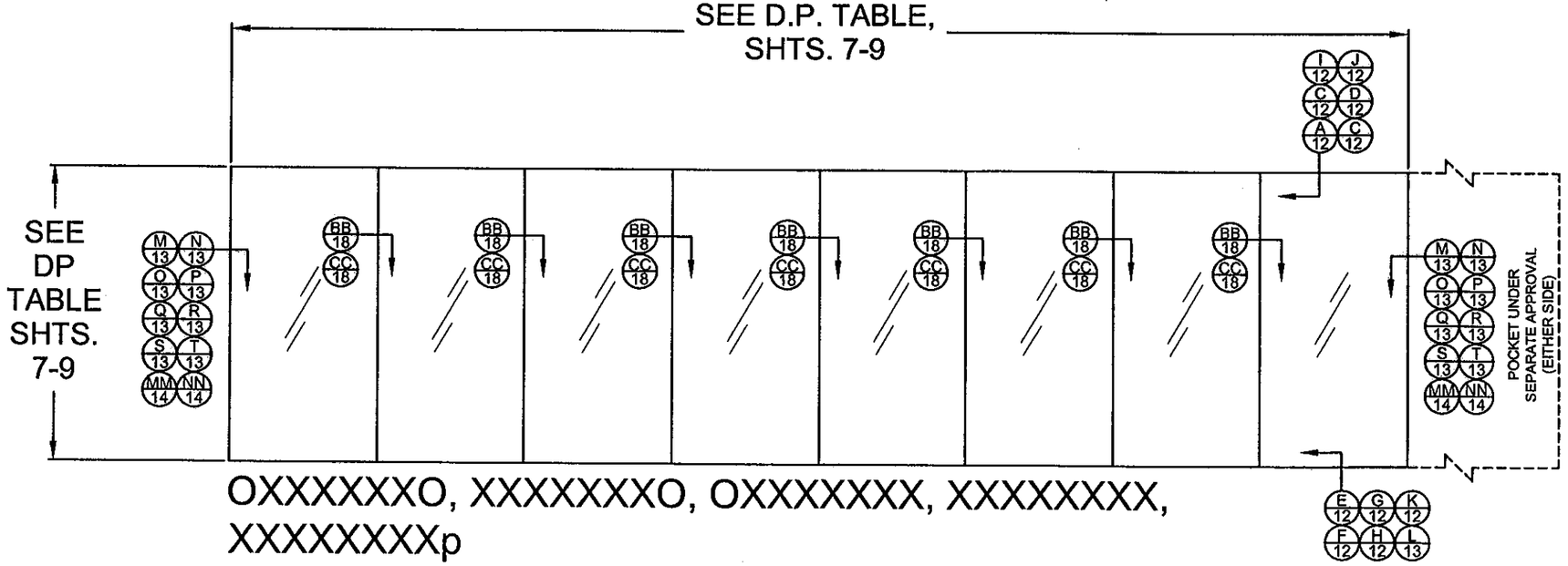

OXXXXXXO, XXXXXXXO, OXXXXXXX, XXXXXXXX, XXXXXXXXp

PRODUCT REVISED
as complying with the Florida Building Code
Acceptance No. 11-1018.17
Expiration Date 4/7/15
By Ishaq I. Chanda
Miami Dade Product Control

Revsd By:	Date:	Revisions:	
J.J.	10/11/11	D	NO CHANGE THIS SHEET
SMC	03/15/10	C	PER MIAMI DADE COMMENTS
SMC	03/01/10	B	PER MIAMI DADE COMMENTS
Drawn By: SMC	Date: 08/05/09	Checked By:	Date:

1070 TECHNOLOGY DRIVE
NOKOMIS, FL 34275
P.O. BOX 1529
NOKOMIS, FL 34274

PGT®

Description: QUALIFIED CONFIGURATIONS
Title: SERIES 670 ALUM. SGD - NON-IMPACT

Series/Model:	Scale:	Sheet:	Drawing No.	Rev:
SGD670	NTS	4 of 25	PGT0001	D

ANTHONY LYNN MILLER
LICENSE
No. 58705
STATE OF FLORIDA
PROFESSIONAL ENGINEER
A. LYNN MILLER, P.E.
P.E.# 58705

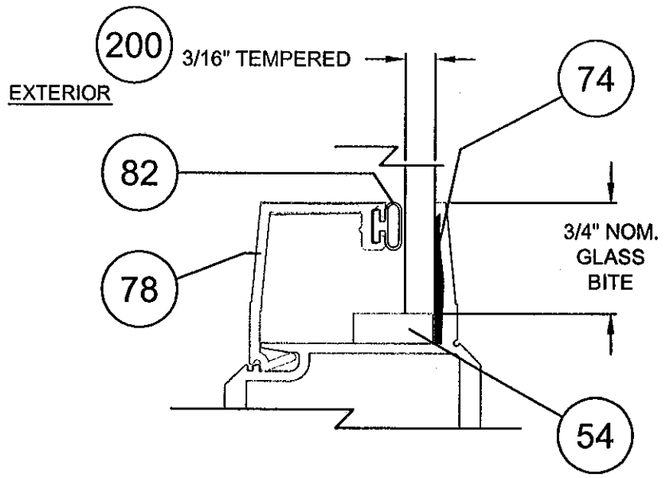

3/16" TEMPERED - TYPE G1

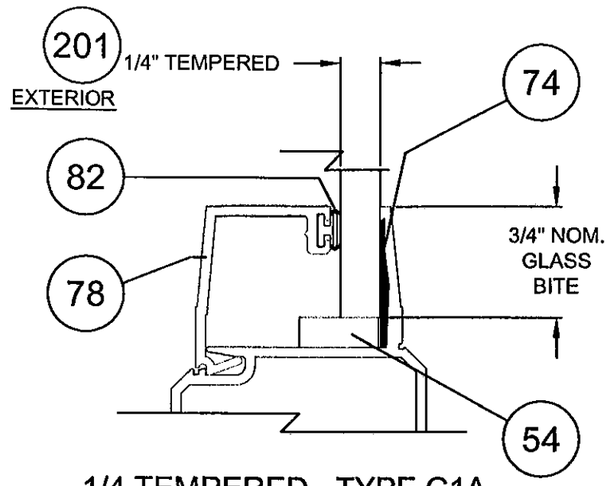

1/4 TEMPERED - TYPE G1A

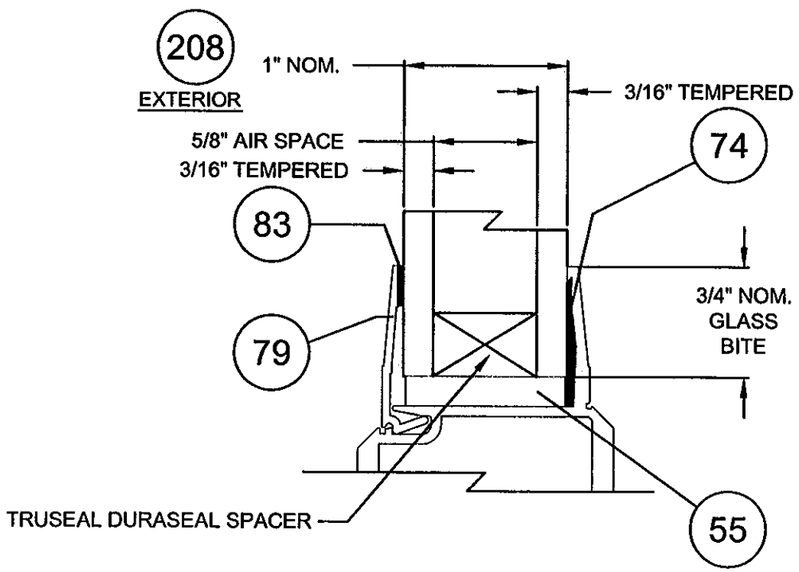

1" INSULATING GLASS - TYPE G2

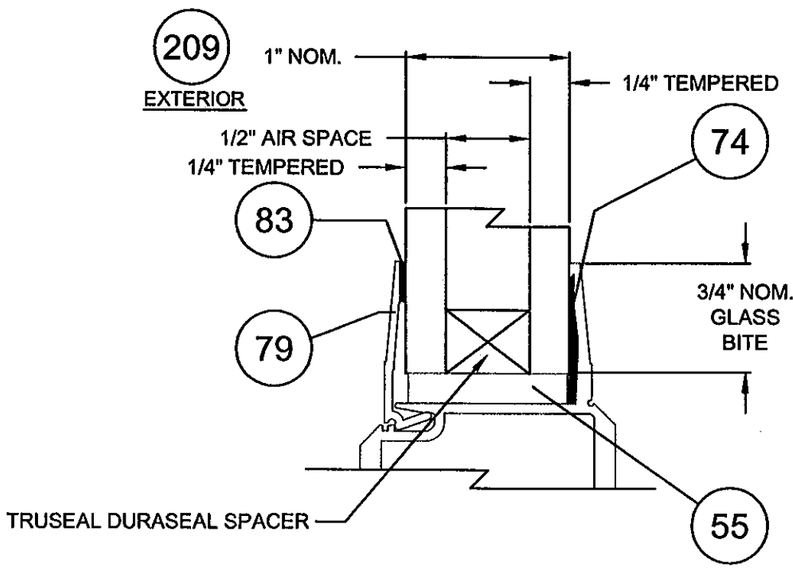

1" INSULATING GLASS - TYPE G2A

PRODUCT REVISED
as complying with the Florida
Building Code
Acceptance No 11-1018.17
Expiration Date 4/7/16
By Ishaq I. Chanda
Miami Dade/Product Control

Revsd By:	Date:	Revisions:	
J.J.	10/11/11	D	NO CHANGE THIS SHEET
SMC	03/15/10	C	PER MIAMI DADE COMMENTS
SMC	03/01/10	B	PER MIAMI DADE COMMENTS
Drawn By: SMC	Date: 08/05/09	Checked By:	Date:

1070 TECHNOLOGY DRIVE
NOKOMIS, FL 34275
P.O. BOX 1529
NOKOMIS, FL 34274

PGT®

Description: GLAZING DETAILS

Title: SERIES 670 ALUM. SGD - NON-IMPACT

Series/Model:	Scale:	Sheet:	Drawing No.	Rev:
SGD670	NTS	5 of 25	PGT0001	D

ANTHONY LYNN MILLER
LICENSE
No. 58705
STATE OF FLORIDA
PROFESSIONAL ENGINEER
10/11/11
A. LYNN MILLER, P.E.
P.E.# 58705

TABLE 1A.

DESIGN PRESSURE AND ANCHORAGE- NO REINF. - STANDARD STILE - STANDARD ASTRAGAL - HD 90 DEG. CORNER STILE

> HEAD & SILL (H&S) INTERLOCK, STRAIGHT & CORNER ASTRAGAL CLUSTER PLUS INTERMEDIATE ANCHOR QTY. PER PANEL H & S,

> JAMB ANCHOR QTY., & P-HOOK ANCHOR QTY.

3/16" TEMPERED (Mono. & I.G.U.)
GLASS TYPE: G1 & G2

1/4" TEMPERED (Mono. & I.G.U.)
GLASS TYPE: G1A & G2A

Anchor Types:
1) *1/4" ELCO ULTRACON (FORMERLY TAPCON)
2) *1/4" SS4 CRETE-FLEX
3) *5/16" ULTRACON
4) *#12 STEEL SCREW (G5)

* SEE ANCHORAGE NOTES 1 & 2 ON SHEET 1.

NOM. PANEL WIDTH		FRAME SIDE	UNIT HEIGHT 80			84			90			96		
			1, 2 - CONC	3 - CONC	2, 4 - WOOD	1, 2 - CONC	3 - CONC	2, 4 - WOOD	1, 2 - CONC	3 - CONC	2, 4 - WOOD	1, 2 - CONC	3 - CONC	2, 4 - WOOD
GLASS TYPE - G1, G1A, G2, G2A			+90	-127.1		+90	-120.0		+90	-110.8		+90	-102.9	
24	Anchors	H&S	C3+1	C3+1	C4+1	C3+1	C3+1	C4+1	C3+1	C3+1	C4+1	C3+1	C3+1	C4+1
		JAMB	10	10	10	10	10	10	10	10	10	10	10	10
		P-HOOK	7	7	7	7	7	7	7	7	7	7	7	7
GLASS TYPE - G1, G1A, G2, G2A			+90	-106.3		+90	-100.2		+90	-92.2		+85.3	-85.3	
30	Anchors	H&S	C3+1	C3+1	C4+1	C3+1	C3+1	C4+1	C3+1	C3+1	C4+1	C3+1	C3+1	C4+1
		JAMB	10	10	10	10	10	10	10	10	10	10	10	10
		P-HOOK	7	7	7	7	7	7	7	7	7	7	7	7
GLASS TYPE - G1, G1A, G2, G2A			+90	-92.9		+87.3	-87.3		+80	-80.0		+73.8	-73.8	
36	Anchors	H&S	C3+1	C3+1	C4+2	C3+1	C3+1	C4+2	C3+1	C3+1	C4+1	C3+1	C3+1	C4+1
		JAMB	10	10	10	10	10	10	10	10	10	10	10	10
		P-HOOK	7	7	7	7	7	7	7	7	7	7	7	7
GLASS TYPE - G1, G1A, G2, G2A			+83.7	-83.7		+78.4	-78.4		+71.6	-71.6		+65.8	-65.8	
42	Anchors	H&S	C3+1	C3+1	C4+2	C3+1	C3+1	C4+2	C3+1	C3+1	C4+2	C3+1	C3+1	C4+2
		JAMB	10	10	10	10	10	10	10	10	10	10	10	10
		P-HOOK	7	7	7	7	7	7	7	7	7	7	7	7
GLASS TYPE - G1, G1A, G2, G2A			+77.1	-77.1		+72	-72.0		+65.5	-65.5		+60	-60.0	
48	Anchors	H&S	C3+1	C3+1	C4+2	C3+1	C3+1	C4+2	C3+1	C3+1	C4+2	C4+1	C4+1	C4+2
		JAMB	10	10	10	10	10	10	10	10	10	10	10	10
		P-HOOK	7	7	7	7	7	7	7	7	7	7	7	7

1. POSITIVE PRESSURES IN TABLE ARE BASED ON THE USE OF THE 4" SILL.
2. WHEN USING THE 2 1/2" SILL, POSITIVE DP IS 46.67 PSF MAX. AND WHEN USING THE 3 1/4" SILL, POSITIVE DP IS 60.0 PSF MAX. (NEGATIVE PRESSURES UNCHANGED). SEE TABLE 1C ON THIS SHEET.
3. 4", 3 1/4" AND 2 1/2" SILL HEIGHTS ARE TESTED FOR WATER INFILTRATION WHEREAS THE 1 1/2" SILL IS NOT AND MUST ONLY BE USED WHERE WATER RESISTANCE IS NOT REQUIRED. POSITIVE DESIGN PRESSURES SHOWN IN TABLE 1A MAY BE USED WHEN THE DOOR IS PROTECTED BY AN OVERHANG COMPLYING WITH THE FLORIDA BUILDING CODE (SEE ADJACENT DIAGRAM);
   THIS CONDITION IS NOT RATED FOR WATER INFILTRATION.
4. SEE SHEETS 12 THROUGH 17 FOR ANCHORAGE SPACING AND EMBEDMENT INFORMATION.
5. DOOR SIZE TO COMPLY WITH FBC EGRESS REQUIREMENTS.

( ) = EXAMPLE ON SHEET 9

TABLE 1C.
SILL HT. VS POS. DP

SILL RISE HEIGHT		(+) DESIGN LOAD
FLUSH	1-1/2"	N/A
LOW	2-1/2"	+ 46.67 PSF
MED	3-1/4"	+ 60.0 PSF
HIGH	4"	+ 90.0 PSF
SEE NOTES 1-3		

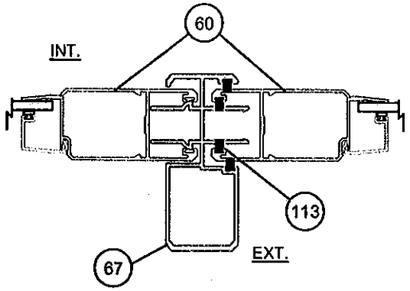

STANDARD ASTRAGAL
STANDARD STILES

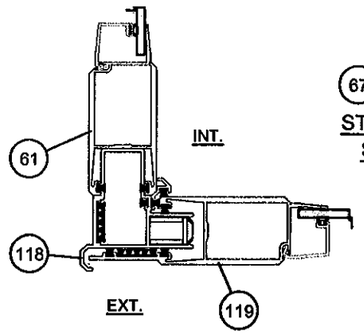

90° OUTSIDE HD CORNER

DLO WIDTH = NOM. PANEL WIDTH - 7"
DLO HEIGHT = NOM. PANEL HEIGHT - 8.25"

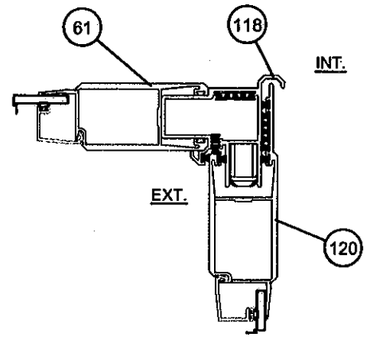

90° INSIDE HD CORNER

HD = HEAVY DUTY

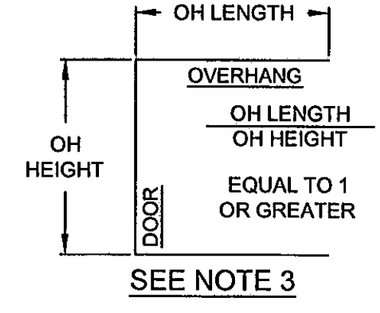

OH LENGTH / OH HEIGHT EQUAL TO 1 OR GREATER

SEE NOTE 3

PRODUCT REVISED
to complying with the Florida Building Code
Acceptance No 11-1019.17
Expiration Date 4/7/15
By Ishaq Chaudhry
Miami Dade Product Control

Revsd By:	Date:	Revisions:	
J.J.	10/11/11	D	NO CHANGE THIS SHEET
SMC	03/15/10	C	PER MIAMI DADE COMMENTS
SMC	03/01/10	B	PER MIAMI DADE COMMENTS
Drawn By: SMC	Date: 5/1/07	Checked By:	Date:

1070 TECHNOLOGY DRIVE
NOKOMIS, FL 34275

P.O. BOX 1529
NOKOMIS, FL 34274

PGT®

Description: DP AND ANCHORAGE

Title: SERIES 670 ALUM. SGD - NON-IMPACT

Series/Model:	Scale:	Sheet:	Drawing No.	Rev:
SGD670	NTS	6 of 25	PGT0001	D

ANTHONY LYNN MILLER
LICENSE
No. 58705
10/11/11
STATE OF FLORIDA
PROFESSIONAL ENGINEER
A. LYNN MILLER, P.E.
P.E.# 58705

DESIGN PRESSURE AND ANCHORAGE- NO REINFORCEMENT- STANDARD STILE - STANDARD ASTRAGAL - HD 90 DEG. CORNER STILES

TABLE 1B.

> HEAD & SILL (H&S) INTERLOCK, STRAIGHT & CORNER ASTRAGAL CLUSTER PLUS ANCHOR QTY. PER PANEL H & S,
> JAMB ANCHOR QTY., & P-HOOK ANCHOR QTY.

3/16" TEMPERED (Mono. & I.G.U.)
GLASS TYPE: G1 & G2
1/4" TEMPERED (Mono. & I.G.U.)
GLASS TYPE: G1A & G2A

Anchor Types:
1) *1/4" ELCO ULTRACON (FORMERLY TAPCON)
2) *1/4" SS4 CRETE-FLEX
3) *5/16" ULTRACON
4) *#12 STEEL SCREW (G5)
* SEE ANCHORAGE NOTES 1 & 2 ON SHEET 1.

NOM. PANEL WIDTH		FRAME SIDE	UNIT HEIGHT 80			84			90			96		
			1,2 - CONC	3 - CONC	2,4 - WOOD	1,2 - CONC	3 - CONC	2,4 - WOOD	1,2 - CONC	3 - CONC	2,4 - WOOD	1,2 - CONC	3 - CONC	2,4 - WOOD
GLASS TYPE - G1, G1A, G2, G2A			+72.5	-72.5		+67.4	-67.4		+61	-61.0		+54.7	-54.7	
54	Anchors	H&S	C3+2	C3+2	C4+2	C3+2	C3+2	C5+2	C3+1	C3+1	C4+2	C3+1	C3+1	C4+2
		JAMB	10	10	10	10	10	10	10	10	10	10	10	10
		P-HOOK	7	7	7	7	7	7	7	7	7	6	6	7
GLASS TYPE - G1, G1A, G2, G2A			+69.1	-69.1		+64	-64.0		+57.6	-57.6		+50.6	-50.6	
60	Anchors	H&S	C3+2	C3+2	C4+3	C3+2	C3+2	C5+3	C3+2	C3+2	C4+2	C3+1	C3+1	C4+2
		JAMB	10	10	10	10	10	10	10	10	10	10	10	10
		P-HOOK	7	7	7	7	7	7	7	7	7	6	6	7

DLO WIDTH = NOM. PANEL WIDTH - 7"
DLO HEIGHT = NOM. PANEL HEIGHT - 8.25"

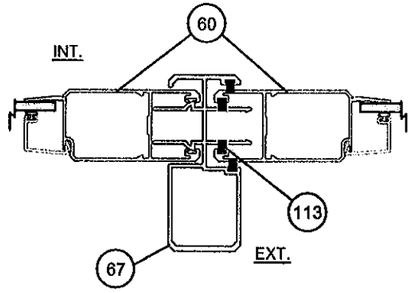

STANDARD ASTRAGAL
STANDARD STILES

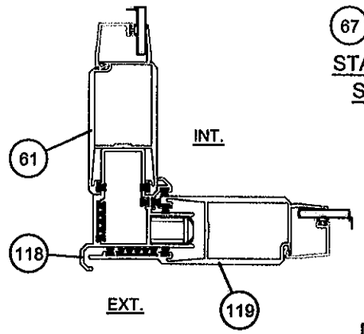

90° OUTSIDE HD CORNER

HD = HEAVY DUTY

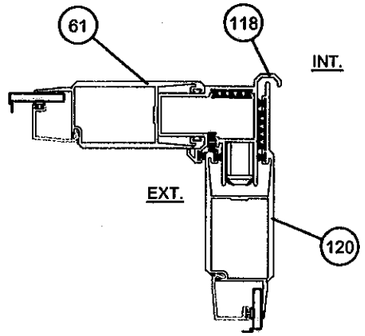

90° INSIDE HD CORNER

TABLE 1C.	
SILL HT. VS POS. DP	
SILL RISE HEIGHT	(+) DESIGN LOAD
FLUSH - 1-1/2"	N/A
LOW - 2-1/2"	+ 46.67 PSF
MED - 3-1/4"	+ 60.0 PSF
HIGH - 4"	+ 90.0 PSF
SEE NOTES 1-3	

1. POSITIVE PRESSURES IN TABLE ARE BASED ON THE USE OF THE 4" SILL.
2. WHEN USING THE 2 1/2" SILL, POSITIVE DP IS 46.67 PSF MAX. AND WHEN USING THE 3 1/4" SILL POSITIVE DP IS 60.0 MAX. (NEGATIVE PRESSURES UNCHANGED). SEE TABLE 1C ON THIS SHEET.
3. 2 1/2", 3 1/4" AND 4" SILL HEIGHTS ARE TESTED FOR WATER INFILTRATION WHEREAS THE 1 1/2" SILL IS NOT AND MUST ONLY BE USED WHERE WATER RESISTANCE IS NOT REQUIRED. POSITIVE DESIGN PRESSURES SHOWN IN TABLE 1B MAY BE USED WHEN THE DOOR IS PROTECTED BY AN OVERHANG COMPLYING WITH THE FLORIDA BUILDING CODE (SEE ADJACENT DIAGRAM); THIS CONDITION IS NOT RATED FOR WATER INFILTRATION.
4. SEE SHEETS 12 THROUGH 17 FOR ANCHORAGE SPACING AND EMBEDMENT INFORMATION.
5. DOOR SIZE TO COMPLY WITH FBC EGRESS REQUIREMENTS.

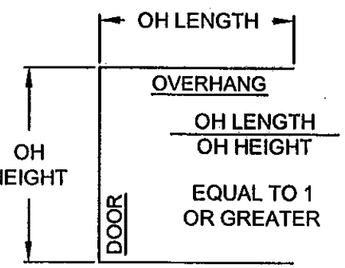

SEE NOTE 3

PRODUCT REVISED
to complying with the Florida Building Code
Acceptance No. 14-1018.17
Expiration Date 4/7/15
By Ishaq I. Chan
Miami Dade/Product Control

ANTHONY LYNN MILLER LICENSE No. 58705 STATE OF FLORIDA PROFESSIONAL ENGINEER
A. LYNN MILLER, P.E.
P.E.# 58705

Revsd By:	Date:	Revisions:	
J.J.	10/11/11	D	NO CHANGE THIS SHEET
SMC	03/16/10	C	PER MIAMI DADE COMMENTS
SMC	03/01/10	B	PER MIAMI DADE COMMENTS
Drawn By: SMC	Date: 08/05/09	Checked By:	Date:

1070 TECHNOLOGY DRIVE
NOKOMIS, FL 34275
P.O. BOX 1529
NOKOMIS, FL 34274

PGT®

Description: DP AND ANCHORAGE
Title: SERIES 670 ALUM. SGD - NON-IMPACT

Series/Model:	Scale:	Sheet:	Drawing No.	Rev:
SGD670	NTS	7 of 25	PGT0001	D

DESIGN PRESSURE AND ANCHORAGE- NO REINFORCEMENT- HEAVY DUTY STILE - STANDARD ASTRAGAL - HD 90 DEG. CORNER STILES

TABLE 2A.

> HEAD & SILL (H&S) INTERLOCK, STRAIGHT & CORNER ASTRAGAL CLUSTER PLUS INTERMEDIATE ANCHOR QTY. PER PANEL H & S,

> JAMB ANCHOR QTY., & P-HOOK ANCHOR QTY.

3/16" TEMPERED (Mono. & I.G.U.)
GLASS TYPE: G1 & G2
1/4" TEMPERED (Mono. & I.G.U.)
GLASS TYPE: G1A & G2A

Anchor Types:
1) *1/4" ELCO ULTRACON (FORMERLY TAPCON)
2) *1/4" SS4 CRETE-FLEX
3) *5/16" ULTRACON
4) *#12 STEEL SCREW (G5)
* SEE ANCHORAGE NOTES 1 & 2 ON SHEET 1.

NOM. PANEL WIDTH	FRAME SIDE	UNIT HEIGHT 80			84			90			96			102			108			114			120		
		1,2 - CONC	3 - CONC	2,4 - WOOD	1,2 - CONC	3 - CONC	2,4 - WOOD	1,2 - CONC	3 - CONC	2,4 - WOOD	1,2 - CONC	3 - CONC	2,4 - WOOD	1,2 - CONC	3 - CONC	2,4 - WOOD	1,2 - CONC	3 - CONC	2,4 - WOOD	1,2 - CONC	3 - CONC	2,4 - WOOD	1,2 - CONC	3 - CONC	2,4 - WOOD
GLASS TYPE - G1, G1A, G2, G2A		+90 -169.4			+90 -160.0			+90 -147.7			+90 -137.1			+90 -128.0			+90 -120.0			+90 -112.9			+90 -106.7		
24 Anchors	H&S	C4+1	C4+1	C5+1	C4+1	C4+1	C5+1	C4+1	C4+1	C5+1	C4+1	C4+1	C5+1	C4+1	C4+1	C5+1	C4+1	C4+1	C5+1	C4+1	C4+1	C5+1	C4+1	C4+1	C5+1
	JAMB	10	10	10	10	10	10	10	10	10	10	10	10	12	12	12	12	12	12	12	12	12	12	12	12
	P-HOOK	9	9	9	9	9	9	9	9	9	9	9	9	9	9	9	9	9	9	9	9	9	9	9	9
GLASS TYPE - G1, G1A, G2, G2A		+90 -141.8			+90 -133.6			+90 -122.9			+90 -113.8			+90 -105.9			+90 -99.1			+90 -93.1			+87.8 -87.8		
30 Anchors	H&S	C4+1	C4+1	C5+2	C4+1	C4+1	C5+2	C4+1	C4+1	C5+1	C4+1	C4+1	C5+1	C4+1	C4+1	C5+1	C4+1	C4+1	C5+1	C4+1	C4+1	C5+1	C4+1	C4+1	C5+1
	JAMB	10	10	10	10	10	10	10	10	10	10	10	10	12	12	12	12	12	12	12	12	12	12	12	12
	P-HOOK	9	9	9	9	9	9	9	9	9	9	9	9	9	9	9	9	9	9	9	9	9	9	9	9
GLASS TYPE - G1, G1A, G2, G2A		+90 -123.9			+90 -116.4			+90 -106.7			+90 -98.5			+90 -91.4			+85.3 -85.3			+80 -80.0			+75.3 -75.3		
36 Anchors	H&S	C4+1	C4+1	C5+2	C4+1	C4+1	C5+2	C4+1	C4+1	C5+2	C4+1	C4+1	C5+2	C4+1	C4+1	C5+2	C4+1	C4+1	C5+1	C4+1	C4+1	C5+1	C4+1	C4+1	C5+1
	JAMB	10	10	10	10	10	10	10	10	10	10	10	10	12	12	12	12	12	12	12	12	12	12	12	12
	P-HOOK	9	9	9	9	9	9	9	9	9	9	9	9	9	9	9	9	9	9	9	9	9	9	9	9
GLASS TYPE - G1, G1A, G2, G2A		+90 -111.6			+90 -104.5			+90 -95.4			+87.8 -87.8			+81.3 -81.3			+75.7 -75.7			+70.8 -70.8			+66.5 -66.5		
42 Anchors	H&S	C4+2	C4+2	C5+2	C4+1	C4+1	C5+2	C4+1	C4+1	C5+2	C4+1	C4+1	C5+2	C4+1	C4+1	C5+2	C4+1	C4+1	C5+2	C4+1	C4+1	C5+2	C4+1	C4+1	C5+2
	JAMB	10	10	10	10	10	10	10	10	10	10	10	10	12	12	12	12	12	12	12	12	12	12	12	12
	P-HOOK	9	9	9	9	9	9	9	9	9	9	9	9	9	9	9	9	9	9	9	9	9	9	9	9
GLASS TYPE - G1, G1A, G2, G2A		+90 -102.9			+90 -96.0			+87.3 -87.3			+80 -80.0			+73.8 -73.8			+68.6 -68.6			+64 -64.0			+60 -60.0		
48 Anchors	H&S	C4+2	C4+2	C5+3	C4+2	C4+2	C5+2	C4+2	C4+2	C5+2	C4+1	C4+1	C5+2	C4+1	C4+1	C5+2	C4+1	C4+1	C5+2	C4+1	C4+1	C5+2	C4+1	C4+1	C6+2
	JAMB	10	10	10	10	10	10	10	10	10	10	10	10	12	12	12	12	12	12	12	12	12	12	12	12
	P-HOOK	9	9	9	9	9	9	9	9	9	9	9	9	9	9	9	9	9	9	9	9	9	9	9	9

1. POSITIVE PRESSURES IN TABLE ARE BASED ON THE USE OF THE 4" SILL.
2. WHEN USING THE 2 1/2" SILL, POSITIVE DP IS 46.67 PSF MAX. WITH THE 3 1/4" SILL, POSITIVE DP IS 60.0 PSF MAX. (NEGATIVE PRESSURES UNCHANGED). SEE TABLE 2C ON THIS SHEET.
3. 2 1/2", 3 1/4" AND 4" SILL HEIGHTS ARE TESTED FOR WATER INFILTRATION WHEREAS THE 1 1/2" SILL IS NOT AND MUST ONLY BE USED WHERE WATER RESISTANCE IS NOT REQUIRED. POSITIVE DESIGN PRESSURES SHOWN IN TABLE 2A MAY BE USED WHEN THE DOOR IS PROTECTED BY AN OVERHANG COMPLYING WITH THE FLORIDA BUILDING CODE (SEE ADJACENT DIAGRAM); THIS CONDITION IS NOT RATED FOR WATER INFILTRATION.
4. SEE SHEETS 12 THROUGH 17 FOR ANCHORAGE SPACING AND EMBEDMENT INFORMATION.
5. DOOR SIZE TO COMPLY WITH FBC EGRESS REQUIREMENTS.

PRODUCT REVISED
to complying with the Florida
Building Code
Acceptance No. 11-1019.17
Expiration Date 4/7/15
By 1/6/17 L. Grande
Miami Dade Product Control

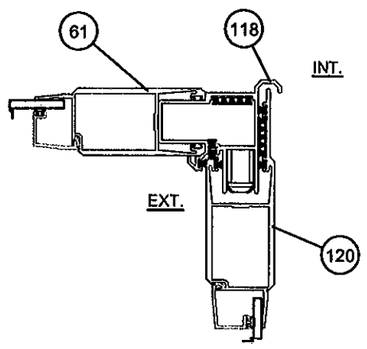

90° INSIDE HD CORNER

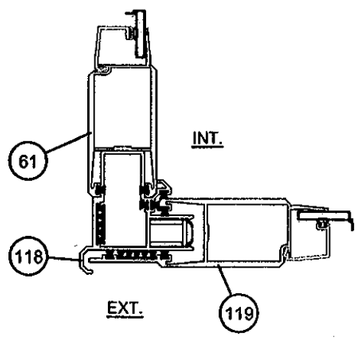

90° OUTSIDE HD CORNER

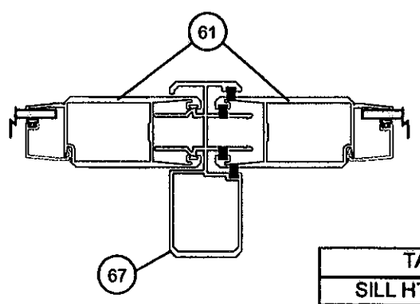

STANDARD ASTRAGAL HEAVY DUTY STILES

HD = HEAVY DUTY

DLO WIDTH = NOM. PANEL WIDTH - 7"
DLO HEIGHT = NOM. PANEL HEIGHT - 8.25"

TABLE 2C. SILL HT. VS POS. DP	
SILL RISE HEIGHT	(+) DESIGN LOAD
FLUSH - 1-1/2"	N/A
LOW - 2-1/2"	+ 46.67 PSF
MED - 3-1/4"	+ 60.0 PSF
HIGH - 4"	+ 90.0 PSF
SEE NOTES 1-3	

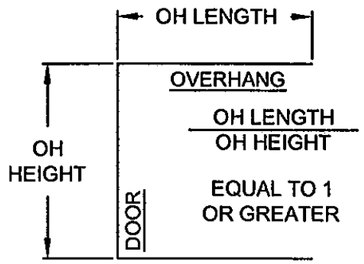

SEE NOTE 3

Revsd By:	Date:	Revisions:	
J.J.	10/11/11	D	NO CHANGE THIS SHEET
SMC	03/15/10	C	PER MIAMI DADE COMMENTS
SMC	03/01/10	B	PER MIAMI DADE COMMENTS
Drawn By: SMC	Date: 08/05/09	Checked By:	Date:

1070 TECHNOLOGY DRIVE
NOKOMIS, FL 34275
P.O. BOX 1529
NOKOMIS, FL 34274

Description: DP AND ANCHORAGE
Title: SERIES 670 ALUM. SGD - NON-IMPACT

Series/Model:	Scale:	Sheet:	Drawing No.	Rev:
SGD670	NTS	8 of 25	PGT0001	D

ANTHONY LYNN MILLER LICENSE No. 58705 STATE OF FLORIDA PROFESSIONAL ENGINEER
10/11/11
A. LYNN MILLER, P.E.
P.E.# 58705

DESIGN PRESSURE AND ANCHORAGE- NO REINFORCEMENT- HEAVY DUTY STILE - NO ASTRAGAL - HD — TABLE 2B.

90 DEG. CORNER STILES

> HEAD & SILL (H&S) INTERLOCK, STRAIGHT & CORNER ASTRAGAL CLUSTER PLUS ANCHOR QTY. PER PANEL H & S,

> JAMB ANCHOR QTY., & P-HOOK ANCHOR QTY.

3/16" TEMPERED (Mono. & I.G.U.)
GLASS TYPE: G1 & G2
1/4" TEMPERED (Mono. & I.G.U.)
GLASS TYPE: G1A & G2A

Anchor Types:
1) *1/4" ELCO ULTRACON (FORMERLY TAPCON)
2) *1/4" SS4 CRETE-FLEX
3) *5/16" ULTRACON
4) *#12 STEEL SCREW (G5)

* SEE ANCHORAGE NOTES 1 & 2 ON SHEET 1.

NOM. PANEL WIDTH		FRAME SIDE	UNIT HEIGHT 80: 1,2-CONC	80: 3-CONC	80: 2,4-WOOD	84: 1,2-CONC	84: 3-CONC	84: 2,4-WOOD	90: 1,2-CONC	90: 3-CONC	90: 2,4-WOOD	96: 1,2-CONC	96: 3-CONC	96: 2,4-WOOD
GLASS TYPE - G1, G1A, G2, G2A			+83	-83.0		+77.2	-77.2		+69.8	-69.8		+63.8	-63.8	
54	Anchors	H&S	C4+2	C4+2	C5+3	C4+2	C4+2	C5+2	C4+2	C4+2	C5+2	C4+1	C4+1	C5+2
		JAMB	10	10	10	10	10	10	10	10	10	10	10	10
		P-HOOK	7	7	8	7	7	8	7	7	8	7	7	8
GLASS TYPE - G1, G1A, G2, G2A			+79.2	-79.2		+73.3	-73.3		+66	-66.0		+60	-60.0	
60	Anchors	H&S	C4+2	C4+2	C5+3	C4+2	C4+2	C5+3	C4+2	C4+2	C5+3	C4+2	C4+2	C5+2
		JAMB	10	10	10	10	10	10	10	10	10	10	10	10
		P-HOOK	7	7	8	7	7	8	7	7	8	7	7	8

1. POSITIVE PRESSURES IN TABLE ARE BASED ON THE USE OF THE 4" SILL.
2. WHEN USING THE 2 1/2" SILL, POSITIVE DP IS 46.67 PSF MAX. AND WHEN USING THE 3 1/4" SILL POSITIVE DP IS 60.0 MAX. (NEGATIVE PRESSURES UNCHANGED). SEE TABLE 2C ON THIS SHEET.
3. 2 1/2", 3 1/4" AND 4" SILL HEIGHTS ARE TESTED FOR WATER INFILTRATION WHEREAS THE 1 1/2" SILL IS NOT AND MUST ONLY BE USED WHERE WATER RESISTANCE IS NOT REQUIRED. POSITIVE DESIGN PRESSURES SHOWN IN TABLE 2B MAY BE USED WHEN THE DOOR IS PROTECTED BY AN OVERHANG COMPLYING WITH THE FLORIDA BUILDING CODE (SEE ADJACENT DIAGRAM); THIS CONDITION IS NOT RATED FOR WATER INFILTRATION.
4. SEE SHEETS 12 THROUGH 17 FOR ANCHORAGE SPACING AND EMBEDMENT INFORMATION.
5. DOOR SIZE TO COMPLY WITH FBC EGRESS REQUIREMENTS.

TABLE 2C.	
SILL HT. VS POS. DP	
SILL RISE HEIGHT	(+) DESIGN LOAD
FLUSH - 1-1/2"	N/A
LOW - 2-1/2"	+ 46.67 PSF
MED - 3-1/4"	+ 60.0 PSF
HIGH - 4"	+ 90.0 PSF
SEE NOTES 1-3	

PRODUCT REVISED to comply with the Florida Building Code
Acceptance No. 11-1018.17
Expiration Date 4/7/15
By Ishaq I. Chanda
[redacted]

= EXAMPLE ON SHEET 9

DLO WIDTH = NOM. PANEL WIDTH - 7"
DLO HEIGHT = NOM. PANEL HEIGHT - 8.25"

HD = HEAVY DUTY

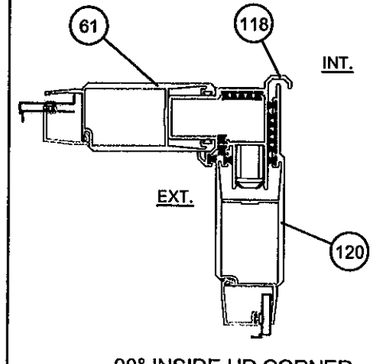

90° INSIDE HD CORNER

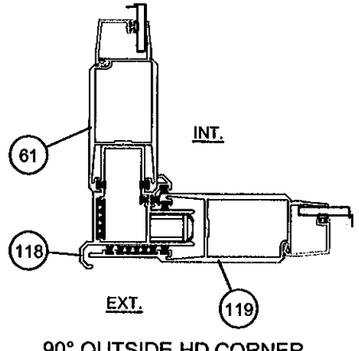

90° OUTSIDE HD CORNER

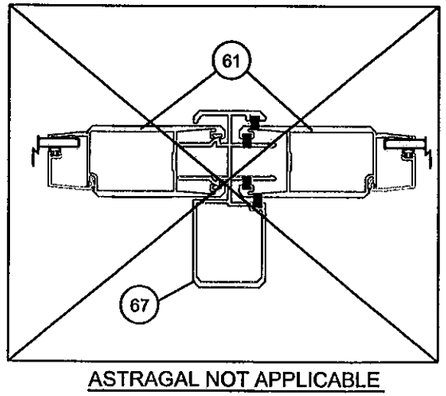

ASTRAGAL NOT APPLICABLE

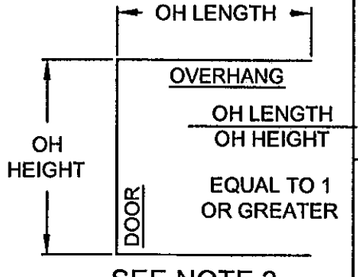

SEE NOTE 3

Revsd By:	Date:	Revisions:	
J.J.	10/11/11	D	NO CHANGE THIS SHEET
SMC	03/15/10	C	PER MIAMI DADE COMMENTS
SMC	03/01/10	B	PER MIAMI DADE COMMENTS
Drawn By: SMC	Date: 08/05/09	Checked By:	Date:

1070 TECHNOLOGY DRIVE
NOKOMIS, FL 34275
P.O. BOX 1529
NOKOMIS, FL 34274

PGT®

Description: DP AND ANCHORAGE
Title: SERIES 670 ALUM. SGD - NON-IMPACT

Series/Model:	Scale:	Sheet:	Drawing No.	Rev:
SGD670	NTS	9 of 25	PGT0001	D

ANTHONY LYNN MILLER LICENSE No. 58705 STATE OF FLORIDA PROFESSIONAL ENGINEER
10/11/11
A. LYNN MILLER, P.E.
P.E.# 58705

TABLE 3A.

DESIGN PRESSURE AND ANCHORAGE- NO REINF.- HEAVY DUTY STILE - HEAVY DUTY ASTRAGAL - HD 90 DEG. CORNER STILES
> HEAD & SILL (H&S) INTERLOCK, STRAIGHT & CORNER ASTRAGAL CLUSTER PLUS INTERMEDIATE ANCHOR QTY. PER PANEL H & S,
> JAMB ANCHOR QTY., & P-HOOK ANCHOR QTY.

3/16" TEMPERED (Mono. & I.G.U.)
GLASS TYPE: G1 & G2
1/4" TEMPERED (Mono. & I.G.U.)
GLASS TYPE: G1A & G2A

Anchor Types:
1) *1/4" ELCO ULTRACON (FORMERLY TAPCON)
2) *1/4" SS4 CRETE-FLEX
3) *5/16" ULTRACON
4) *#12 STEEL SCREW (G5)
* SEE ANCHORAGE NOTES 1 & 2 ON SHEET 1.

NOM. PANEL WIDTH		FRAME SIDE	UNIT HEIGHT 80			84			90			96		
			1, 2 - CONC	3 - CONC	2, 4 - WOOD	1, 2 - CONC	3 - CONC	2, 4 - WOOD	1, 2 - CONC	3 - CONC	2, 4 - WOOD	1, 2 - CONC	3 - CONC	2, 4 - WOOD
GLASS TYPE - G1, G1A, G2, G2A			+90 -190.6			+90 -180.0			+90 -166.2			+90 -154.3		
24	Anchors	H&S	C4+1	C4+1	C6+1	C4+1	C4+1	C6+1	C4+1	C4+1	C6+1	C4+1	C4+1	C6+1
		JAMB	10	10	10	10	10	10	10	10	10	10	10	10
		P-HOOK	10	10	10	10	10	10	10	10	10	10	10	10
GLASS TYPE - G1, G1A, G2, G2A			+90 -159.5			+90 -150.3			+90 -138.2			+90 -128.0		
30	Anchors	H&S	C4+1	C4+1	C6+2	C4+1	C4+1	C6+2	C4+1	C4+1	C6+2	C4+1	C4+1	C6+2
		JAMB	10	10	10	10	10	10	10	10	10	10	10	10
		P-HOOK	10	10	10	10	10	10	10	10	10	10	10	10
GLASS TYPE - G1, G1A, G2, G2A			+90 -139.4			+90 -130.9			+90 -120.0			+90 -110.8		
36	Anchors	H&S	C4+1	C4+1	C6+2	C4+1	C4+1	C6+2	C4+1	C4+1	C6+2	C4+1	C4+1	C6+2
		JAMB	10	10	10	10	10	10	10	10	10	10	10	10
		P-HOOK	10	10	10	10	10	10	10	10	10	10	10	10
GLASS TYPE - G1, G1A, G2, G2A			+90 -125.5			+90 -117.6			+90 -107.3			+90 -98.7		
42	Anchors	H&S	C4+2	C4+2	C6+2	C4+2	C4+2	C6+2	C4+1	C4+1	C6+2	C4+1	C4+1	C6+2
		JAMB	10	10	10	10	10	10	10	10	10	10	10	10
		P-HOOK	10	10	10	10	10	10	10	10	10	10	10	10
GLASS TYPE - G1, G1A, G2, G2A			+90 -115.7			+90 -108.0			+90 -98.2			+90 -90.0		
48	Anchors	H&S	C4+2	C4+2	C6+3	C4+2	C4+2	C6+3	C4+2	C4+2	C6+3	C6+2	C6+2	C6+2
		JAMB	10	10	10	10	10	10	10	10	10	10	10	10
		P-HOOK	10	10	10	10	10	10	10	10	10	10	10	10

1. POSITIVE PRESSURES IN TABLE ARE BASED ON THE USE OF THE 4" SILL.
2. WHEN USING THE 2 1/2" SILL, POSITIVE DP IS 46.67 PSF MAX. AND WHEN USING THE 3 1/4" SILL POSITIVE DP IS 60.0 MAX. (NEGATIVE PRESSURES UNCHANGED). SEE TABLE 3C ON THIS SHEET.
3. 2 1/2", 3 1/4" AND 4" SILL HEIGHTS ARE TESTED FOR WATER INFILTRATION WHEREAS THE 1 1/2" SILL IS NOT AND MUST ONLY BE USED WHERE WATER RESISTANCE IS NOT REQUIRED. POSITIVE DESIGN PRESSURES SHOWN IN TABLE 3A MAY BE USED WHEN THE DOOR IS PROTECTED BY AN OVERHANG COMPLYING WITH THE FLORIDA BUILDING CODE (SEE ADJACENT DIAGRAM); THIS CONDITION IS NOT RATED FOR WATER INFILTRATION.
4. SEE SHEETS 12 THROUGH 17 FOR ANCHORAGE SPACING AND EMBEDMENT INFORMATION.
5. DOOR SIZE TO COMPLY WITH FBC EGRESS REQUIREMENTS.

TABLE 3C.

SILL HT. VS POS. DP		
SILL RISE HEIGHT		(+) DESIGN LOAD
FLUSH	1-1/2"	N/A
LOW	2-1/2"	+ 46.67 PSF
MED	3-1/4"	+ 60.0 PSF
HIGH	4"	+ 90.0 PSF
SEE NOTES 1-3		

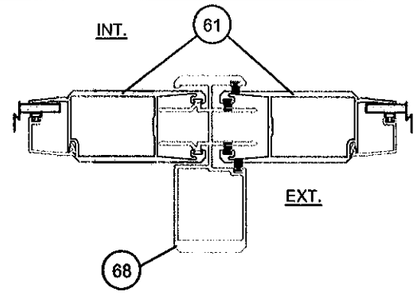

HEAVY DUTY ASTRAGAL
HEAVY DUTY STILES

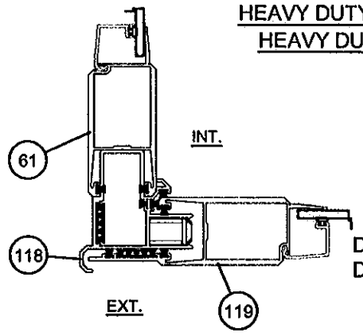

DLO WIDTH = NOM. PANEL WIDTH - 7"
DLO HEIGHT = NOM. PANEL HEIGHT - 8.25"

90° OUTSIDE HD CORNER

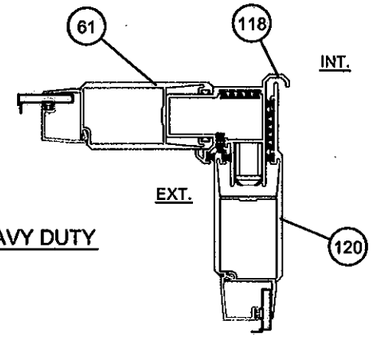

HD = HEAVY DUTY

90° INSIDE HD CORNER

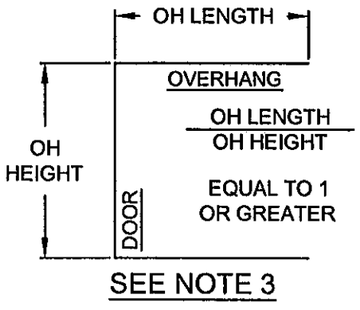

SEE NOTE 3

*PRODUCT REVISED
as complying with the Florida
Building Code
Acceptance No.
Expiration Date
By
Miami Dade Product Control

ANTHONY LYNN MILLER
LICENSE
No. 58705
10/11/11
STATE OF
FLORIDA
PROFESSIONAL ENGINEER
A. LYNN MILLER, P.E.
P.E.# 58705

Revsd By:	Date:	Revisions:	
J.J.	10/11/11	D	NO CHANGE THIS SHEET
SMC	03/15/10	C	PER MIAMI DADE COMMENTS
SMC	03/01/10	B	PER MIAMI DADE COMMENTS
Drawn By: SMC	Date: 08/05/09	Checked By:	Date:

1070 TECHNOLOGY DRIVE
NOKOMIS, FL 34275
P.O. BOX 1529
NOKOMIS, FL 34274

PGT®

Description: DP AND ANCHORAGE
Title: SERIES 670 ALUM. SGD - NON-IMPACT

Series/Model:	Scale:	Sheet:	Drawing No.	Rev:
SGD670	NTS	10 of 25	PGT0001	D

DESIGN PRESSURE AND ANCHORAGE- NO REINFORCEMENT- HD STILE - HD ASTRAGAL - HD 90 DEG. CORNER STILES

TABLE 3B.

> HEAD & SILL (H&S) INTERLOCK, STRAIGHT & CORNER ASTRAGAL CLUSTER PLUS ANCHOR QTY. PER PANEL H & S,
> JAMB ANCHOR QTY., & P-HOOK ANCHOR QTY.

3/16" TEMPERED (Mono. & I.G.U.)
GLASS TYPE: G1 & G2
1/4" TEMPERED (Mono. & I.G.U.)
GLASS TYPE: G1A & G2A

Anchor Types:
1) *1/4" ELCO ULTRACON (FORMERLY TAPCON)
2) *1/4" SS4 CRETE-FLEX
3) *5/16" ULTRACON
4) *#12 STEEL SCREW (G5)
* SEE ANCHORAGE NOTES 1 & 2 ON SHEET 1.

NOM. PANEL WIDTH		FRAME SIDE	UNIT HEIGHT 80			84			90			96		
			1,2 - CONC	3 - CONC	2,4 - WOOD	1,2 - CONC	3 - CONC	2,4 - WOOD	1,2 - CONC	3 - CONC	2,4 - WOOD	1,2 - CONC	3 - CONC	2,4 - WOOD
GLASS TYPE - G1, G1A, G2, G2A			+83	-83.0		+77.2	-77.2		+69.8	-69.8		+62.6	-62.6	
54	Anchors	H&S	C4+2	C4+2	C5+3	C4+2	C4+2	C5+2	C4+2	C4+2	C5+2	C4+1	C4+1	C5+2
		JAMB	10	10	10	10	10	10	10	10	10	10	10	10
		P-HOOK	7	7	8	7	7	8	7	7	8	7	7	8
GLASS TYPE - G1, G1A, G2, G2A			+79.2	-79.2		+73.3	-73.3		+66	-66.0		+58	-58.0	
60	Anchors	H&S	C4+2	C4+2	C5+3	C4+2	C4+2	C5+3	C4+2	C4+2	C5+3	C4+2	C4+2	C5+2
		JAMB	10	10	10	10	10	10	10	10	10	10	10	10
		P-HOOK	7	7	8	7	7	8	7	7	8	7	7	8

TABLE 3C.	
SILL HT. VS POS. DP	
SILL RISE HEIGHT	(+) DESIGN LOAD
FLUSH - 1-1/2"	N/A
LOW - 2-1/2"	+ 46.67 PSF
MED - 3-1/4"	+ 60.0 PSF
HIGH - 4"	+ 90.0 PSF
SEE NOTES 1-3	

1. POSITIVE PRESSURES IN TABLE ARE BASED ON THE USE OF THE 4" SILL.
2. WHEN USING THE 2 1/2" SILL, POSITIVE DP IS 46.67 PSF MAX. AND WHEN USING THE 3 1/4" SILL POSITIVE DP IS 60.0 MAX. (NEGATIVE PRESSURES UNCHANGED). SEE TABLE 3C ON THIS SHEET.
3. 2 1/2", 3 1/4" AND 4" SILL HEIGHTS ARE TESTED FOR WATER INFILTRATION WHEREAS THE 1 1/2" SILL IS NOT AND MUST ONLY BE USED WHERE WATER RESISTANCE IS NOT REQUIRED. POSITIVE DESIGN PRESSURES SHOWN IN TABLE 3B MAY BE USED WHEN THE DOOR IS PROTECTED BY AN OVERHANG COMPLYING WITH THE FLORIDA BUILDING CODE (SEE ADJACENT DIAGRAM); THIS CONDITION IS NOT RATED FOR WATER INFILTRATION.
4. SEE SHEETS 12 THROUGH 17 FOR ANCHORAGE SPACING AND EMBEDMENT INFORMATION.
5. DOOR SIZE TO COMPLY WITH FBC EGRESS REQUIREMENTS.

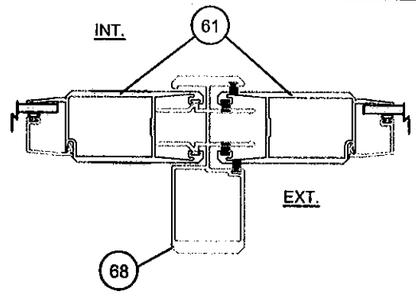

HEAVY DUTY ASTRAGAL
HEAVY DUTY STILES

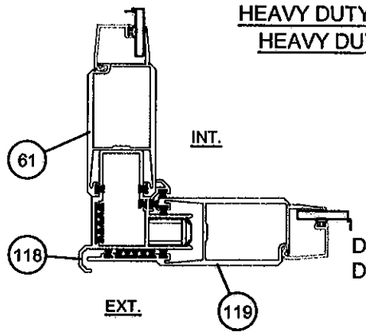

DLO WIDTH = NOM. PANEL WIDTH - 7"
DLO HEIGHT = NOM. PANEL HEIGHT - 8.25"

90° OUTSIDE HD CORNER

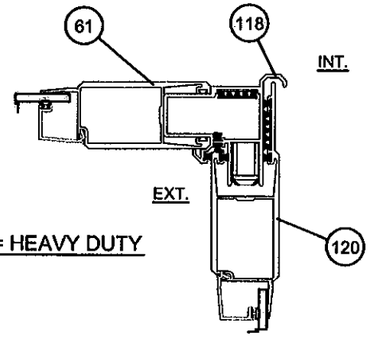

HD = HEAVY DUTY

90° INSIDE HD CORNER

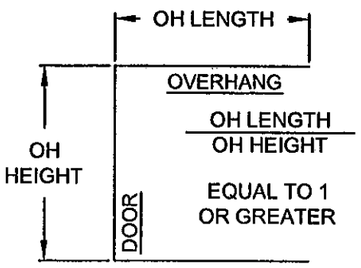

SEE NOTE 3

PRODUCT REVISED
as complying with the Florida Building Code
Acceptance No.
Expiration Date
By
Miami Dade Product Control

ANTHONY LYNN MILLER LICENSE No. 58705 STATE OF FLORIDA PROFESSIONAL ENGINEER
10/11/11
A. LYNN MILLER, P.E.
P.E.# 58705

Revsd By:	Date:	Revisions:	
J.J.	10/11/11	D	NO CHANGE THIS SHEET
SMC	03/15/10	C	PER MIAMI DADE COMMENTS
SMC	03/01/10	B	PER MIAMI DADE COMMENTS
Drawn By: SMC	Date: 08/05/09	Checked By:	Date:

1070 TECHNOLOGY DRIVE
NOKOMIS, FL 34275
P.O. BOX 1529
NOKOMIS, FL 34274

Description: DP AND ANCHORAGE
Title: SERIES 670 ALUM. SGD - NON-IMPACT

Series/Model:	Scale:	Sheet:	Drawing No.	Rev:
SGD670	NTS	11 of 25	PGT0001	D

ANCHORAGE REQUIREMENTS NOTES:

1. APPROVED ANCHOR TYPES: 1) 1/4" ELCO ULTRACON (FORMERLY TAPCON) 2) 1/4" ELCO SS4 CRETE-FLEX 3) 5/16" ULTRACON 4) #12 STEEL SCREW (G5)
2. ANCHOR LOCATION SPACING FOR ANCHOR QUANTITIES SPECIFIED IN TABLES 1A, 1B, 2A, 2B, 3A & 3B, SHTS. 6-11:

HEAD & SILL..... 8" MAX. FROM FRAME CORNERS. USE SPECIFIED CLUSTER FROM APPROPRIATE TABLES, SHTS. 6-8 AT EACH INTERLOCK AND STRAIGHT AND CORNER ASTRAGAL LOCATION, PLUS SPECIFIED QUANTITY OF ADDITIONAL INTERMEDIATE ANCHORS PER PANEL (THE 8" FROM CORNER ANCHORS CAN BE INCLUDED). ADDITIONAL ANCHORS 24" MAX. O.C. SEE EXAMPLE ANCHORAGE PLANS BELOW AND EXAMPLE CLUSTERS AT ASTRAGAL, INTERLOCK & 90° CORNER ON SHT. 13-14.

JAMBS & P-HOOKS... 6" MAX. FROM BOTTOM AND 21" MAX. O.C. UTILIZING ANCHOR QUANTITIES FROM APPROPRIATE TABLES, SHTS. 6-11. SEE P-HOOK ANCHOR DETAILS ON SHEETS 16-17.

"ANCHORS PER PANEL" ARE THOSE AT THE HEAD AND SILL BETWEEN CLUSTERS OR THOSE BETWEEN A CLUSTER AND A FRAME JAMB OR P-HOOK.

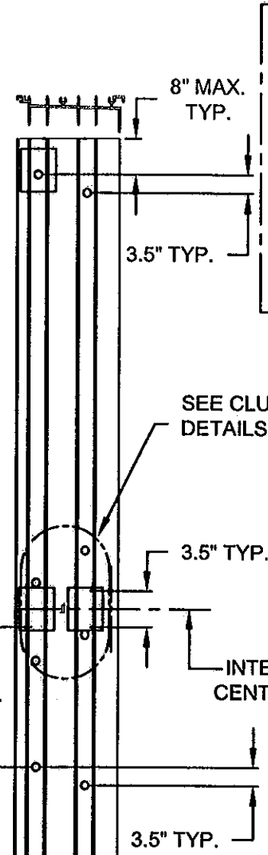

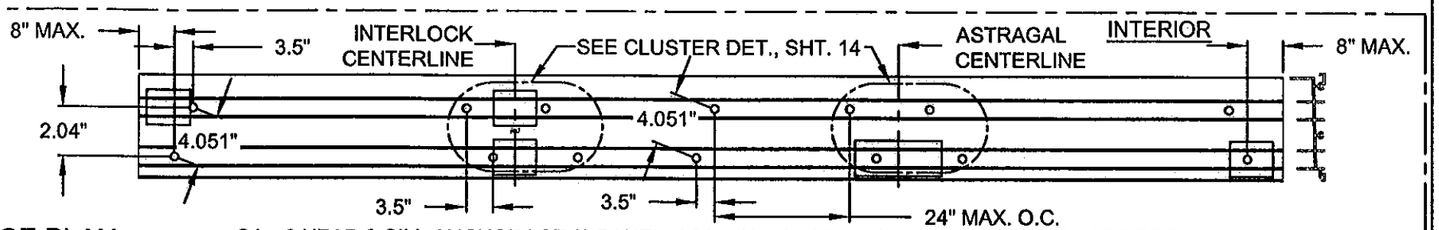

EXAMPLE OXX ANCHORAGE PLAN:

C4 + 2 HEAD & SILL ANCHORAGE (3 PANEL, 2-TRACK EXAMPLE SHOWN) = (14) ANCHORS TOTAL

(3) PANEL, 48" x 96" DOOR FROM TABLE 1A, SHT. 6, ANCHOR TYPES 2 & 4 IN WOOD SUBSTRATE

EXTERIOR

C4+2 & CORNERS = (20) ANCHORS TOTAL AT HEAD AND AT SILL

SEE TYP. JAMB CLUSTER DETAIL BELOW

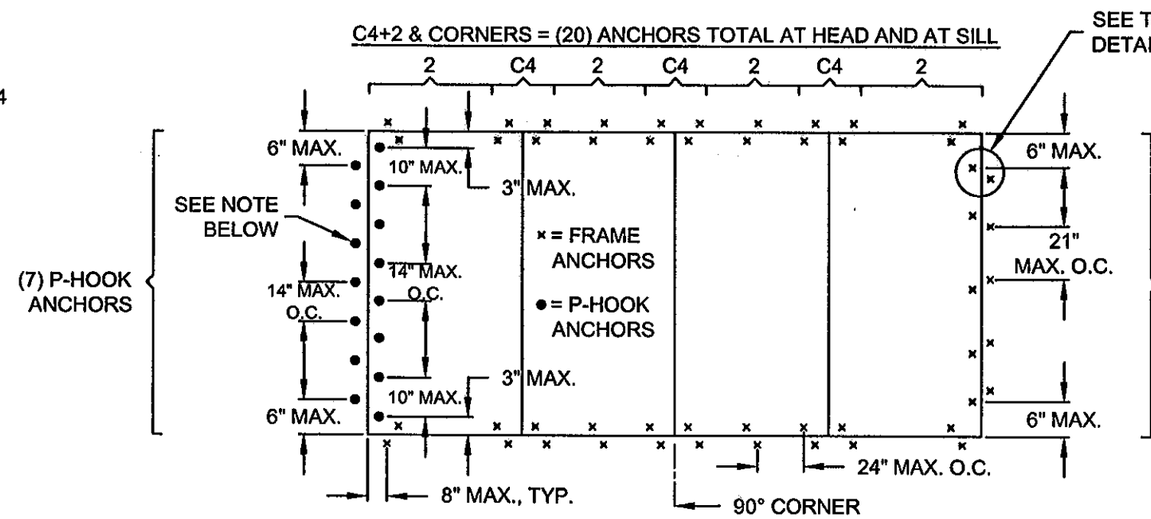

EXAMPLE OX-90° OUTSIDE CORNER-XO CORNER ANCHORAGE PLAN:

(4) PANEL, 60" x 96" DOOR FROM TABLE 2B, SHT. 9, ANCHOR TYPE 1 & 2 IN CONCRETE SUBSTRATE

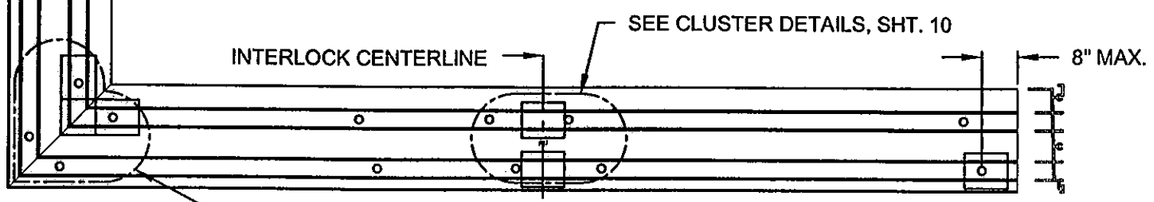

EXTERIOR

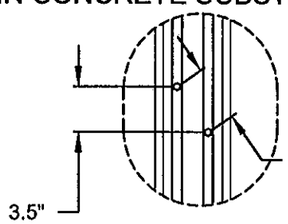

TYPICAL JAMB CLUSTER FOR DETAILS M, N, O, P, Q & R

PRODUCT REVISED to complying with the Florida Building Code
Acceptance No.
Expiration Date
By
Miami Dade Product Control

Revsd By:	Date:	Revisions:	
J.J.	10/11/11	D	NO CHANGE THIS SHEET
SMC	03/16/10	C	PER MIAMI DADE COMMENTS
SMC	03/01/10	B	PER MIAMI DADE COMMENTS
Drawn By: SMC	Date: 08/05/09	Checked By: RJA	Date:

1070 TECHNOLOGY DRIVE
NOKOMIS, FL 34275
P.O. BOX 1529
NOKOMIS, FL 34274

PGT®

Description: ANCHORAGE SPACING & EXAMPLE PLANS

Title: SERIES 670 ALUM. SGD - NON-IMPACT

Series/Model:	Scale:	Sheet:	Drawing No.	Rev:
SGD670	NTS	12 of 25	PGT0001	D

ANTHONY LYNN MILLER LICENSE No. 58705 STATE OF FLORIDA PROFESSIONAL ENGINEER
A. LYNN MILLER, P.E.
P.E.# 58705

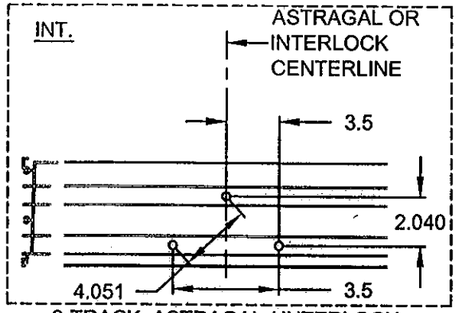

2-TRACK, ASTRAGAL / INTERLOCK
ANCHOR CLUSTER - C3

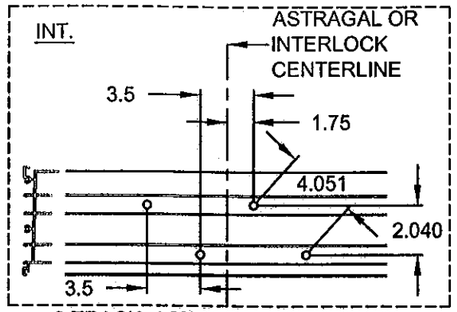

2-TRACK, ASTRAGAL / INTERLOCK
ANCHOR CLUSTER - C4

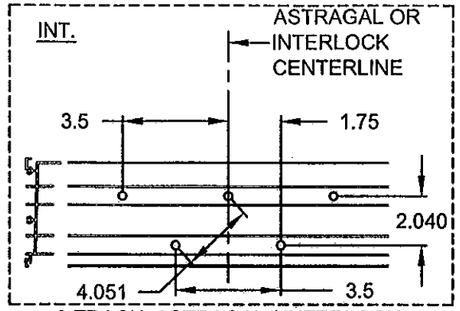

2-TRACK, ASTRAGAL / INTERLOCK
ANCHOR CLUSTER - C5

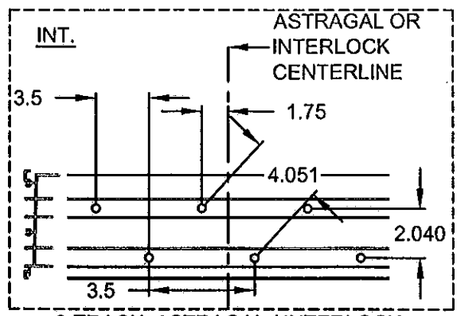

2-TRACK, ASTRAGAL / INTERLOCK
ANCHOR CLUSTER - C6

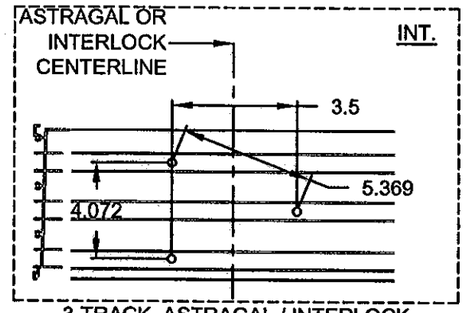

3-TRACK, ASTRAGAL / INTERLOCK
ANCHOR CLUSTER - C3

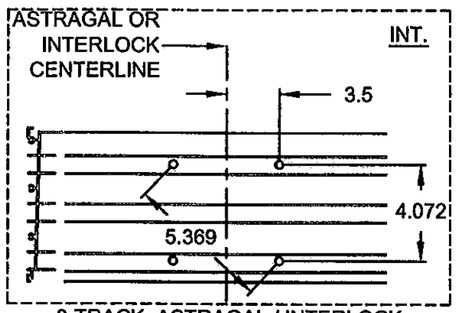

3-TRACK, ASTRAGAL / INTERLOCK
ANCHOR CLUSTER - C4

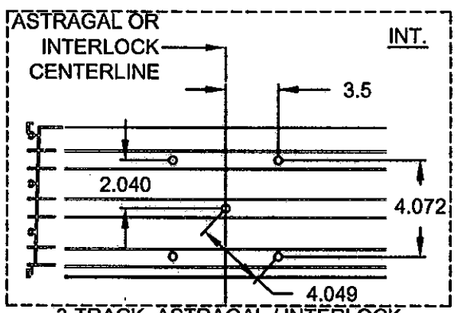

3-TRACK, ASTRAGAL / INTERLOCK
ANCHOR CLUSTER - C5

NOTE:
ALL DIMENSIONS SHOWN ARE BASED ON MINIMUM ALLOWED. ALL DIMENSIONS SHOWN ARE IN INCHES.

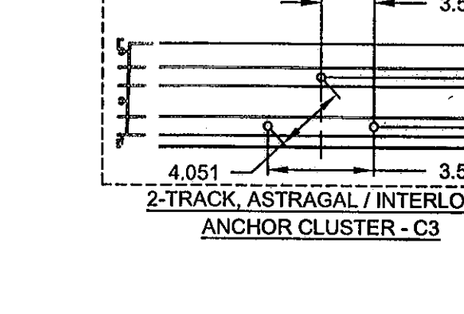

3-TRACK, ASTRAGAL / INTERLOCK
ANCHOR CLUSTER - C6

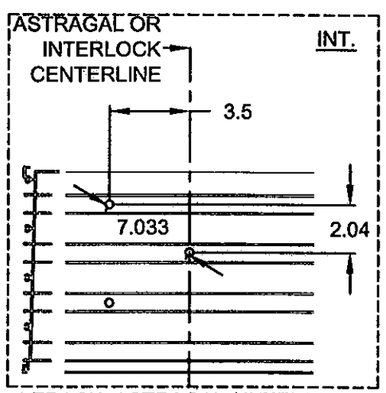

4-TRACK, ASTRAGAL / INTERLOCK
ANCHOR CLUSTER - C3

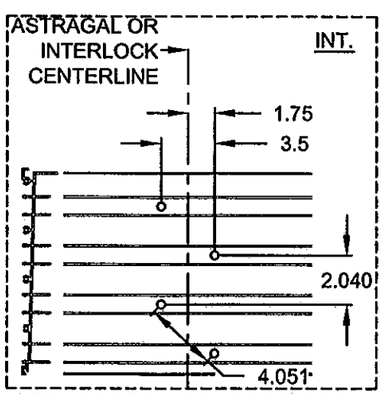

4-TRACK, ASTRAGAL / INTERLOCK
ANCHOR CLUSTER - C4

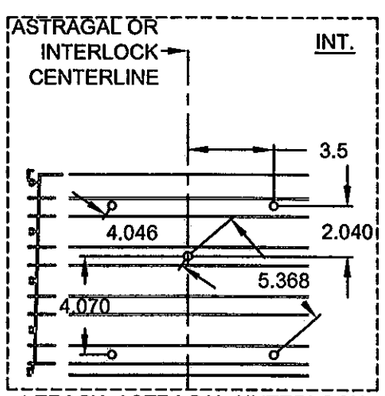

4-TRACK, ASTRAGAL / INTERLOCK
ANCHOR CLUSTER - C5

PRODUCT REVISED
to complying with the Florida Building Code
Acceptance No. 11-1018.17
Expiration Date 4/7/15
Miami Dade Product Control

Revsd By:	Date:	Revisions:	
J.J.	10/11/11	D	NO CHANGE THIS SHEET
SMC	03/15/10	C	PER MIAMI DADE COMMENTS
SMC	03/01/10	B	PER MIAMI DADE COMMENTS
Drawn By: SMC	Date: 08/05/09	Checked By:	Date:

1070 TECHNOLOGY DRIVE
NOKOMIS, FL 34275

P.O. BOX 1529
NOKOMIS, FL 34274

Description:
ANCHORAGE, EXAMPLE CLUSTERS

Title:
SERIES 670 ALUM. SGD - NON-IMPACT

Series/Model:	Scale:	Sheet:	Drawing No.	Rev:
SGD670	NTS	13 of 25	PGT0001	D

ANTHONY LYNN MILLER
LICENSE
No. 58705
STATE OF FLORIDA
PROFESSIONAL ENGINEER
10/11/11
A. LYNN MILLER, P.E.
P.E.# 58705

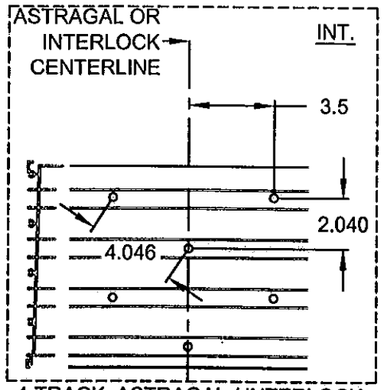

4-TRACK, ASTRAGAL / INTERLOCK
ANCHOR CLUSTER - C6

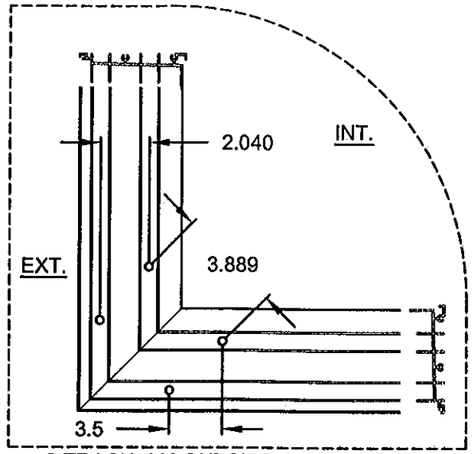

2-TRACK, 90° OUTSIDE CORNER SHOWN,
2-TRACK, 90° INSIDE CORNER SIMILAR (OPPOSITE)
ANCHOR CLUSTER - C4
USED FOR C3 AND C4

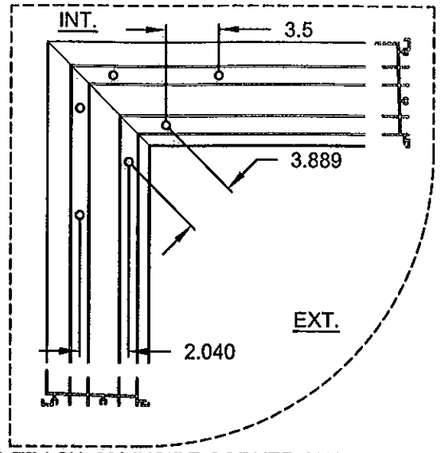

2-TRACK, 90° INSIDE CORNER SHOWN,
2-TRACK, 90° OUTSIDE CORNER SIMILAR (OPPOSITE)
ANCHOR CLUSTER - C6
USED FOR C5 AND C6

NOTE:
ALL DIMENSIONS SHOWN ARE BASED ON MINIMUM ALLOWED. ALL DIMENSIONS SHOWN ARE IN INCHES.

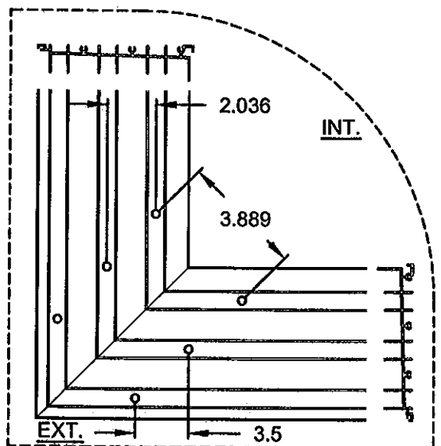

3-TRACK, 90° OUTSIDE CORNER SHOWN,
3-TRACK, 90° INSIDE CORNER SIMILAR (OPPOSITE)
C6 ANCHOR CLUSTER REQUIRED
AT ALL 3-TRACK CORNERS

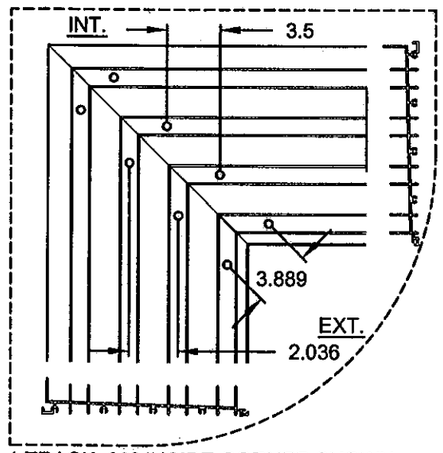

4-TRACK, 90° INSIDE CORNER SHOWN,
4-TRACK, 90° OUTSIDE CORNER SIMILAR (OPPOSITE)
C8 ANCHOR CLUSTER REQUIRED
AT ALL 4-TRACK CORNERS

PRODUCT REVISED
as complying with the Florida
Building Code
Acceptance No. 11-1018.17
Expiration Date 4/7/15
By Ishaq I. Chanda
Miami Dade Product Control

Revsd By:	Date:	Revisions:	
J.J.	10/11/11	D	NO CHANGE THIS SHEET
SMC	03/15/10	C	PER MIAMI DADE COMMENTS
SMC	03/01/10	B	PER MIAMI DADE COMMENTS
Drawn By: SMC	Date: 08/05/09	Checked By:	Date:

1070 TECHNOLOGY DRIVE
NOKOMIS, FL 34275
P.O. BOX 1529
NOKOMIS, FL 34274

PGT®

Description: ANCHORAGE, EXAMPLE CLUSTERS
Title: SERIES 670 ALUM. SGD - NON-IMPACT

Series/Model:	Scale:	Sheet:	Drawing No.	Rev:
SGD670	NTS	14 of 25	PGT0001	D

ANTHONY LYNN MILLER
LICENSE
No. 58705
10/11/11
STATE OF FLORIDA
PROFESSIONAL ENGINEER
A. LYNN MILLER, P.E.
P.E.# 58705

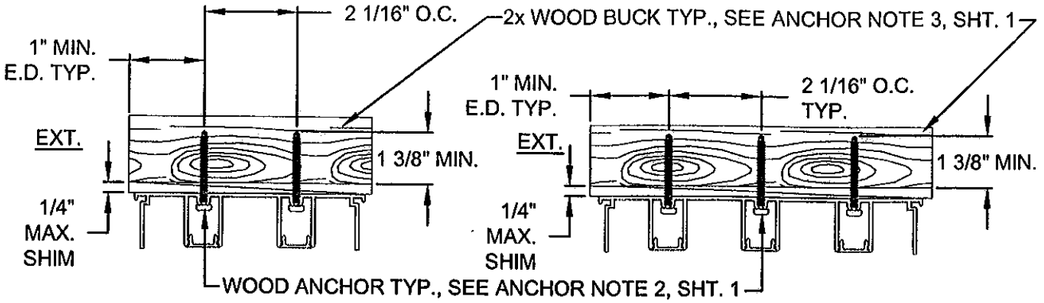

DETAIL A, 2-TRACK FRAME HEAD
WOOD INSTALLATION

DETAIL B, 3-TRACK FRAME HEAD
WOOD INSTALLATION

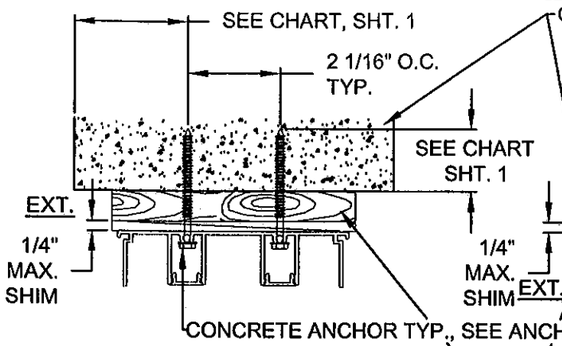

DETAIL C, 2-TRACK FRAME HEAD
CONCRETE INSTALLATION

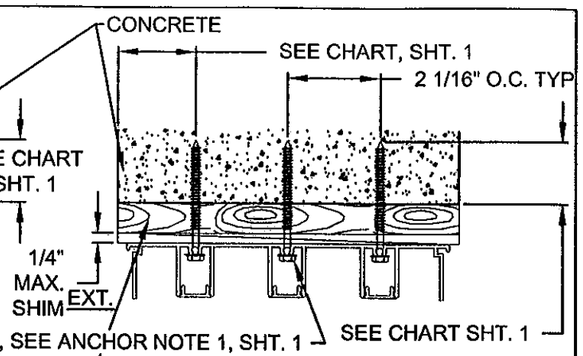

DETAIL D, 3-TRACK FRAME HEAD
CONCRETE INSTALLATION

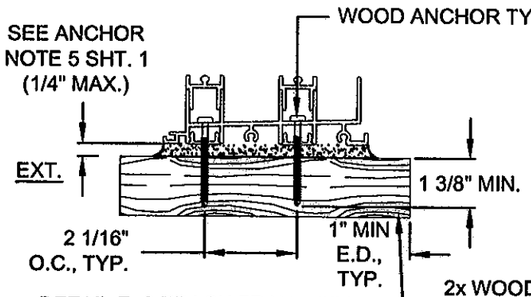

DETAIL E, 2-TRACK FRAME SILL
WOOD INSTALLATION

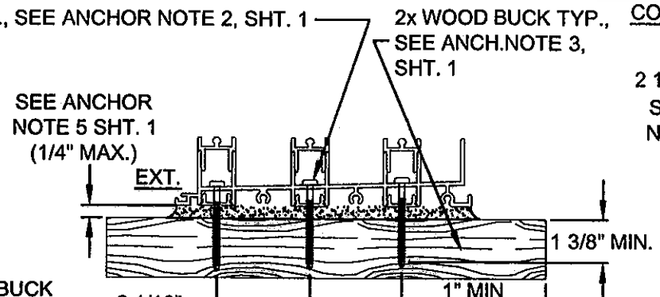

DETAIL F, 3-TRACK FRAME SILL
WOOD INSTALLATION

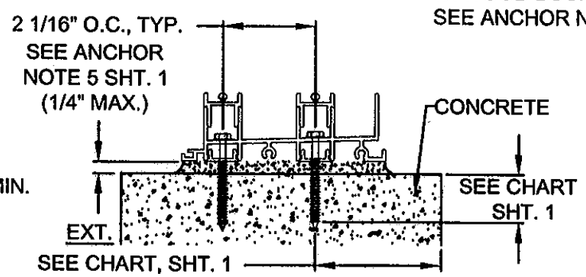

DETAIL G, 2-TRACK FRAME SILL
CONCRETE INSTALLATION

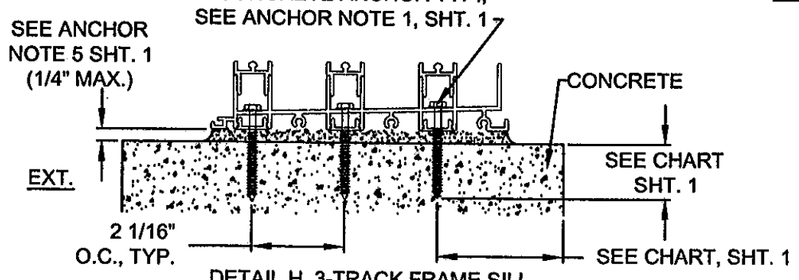

DETAIL H, 3-TRACK FRAME SILL
CONCRETE INSTALLATION

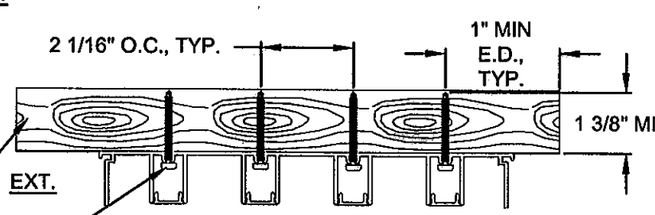

DETAIL I, 4-TRACK FRAME HEAD
WOOD INSTALLATION

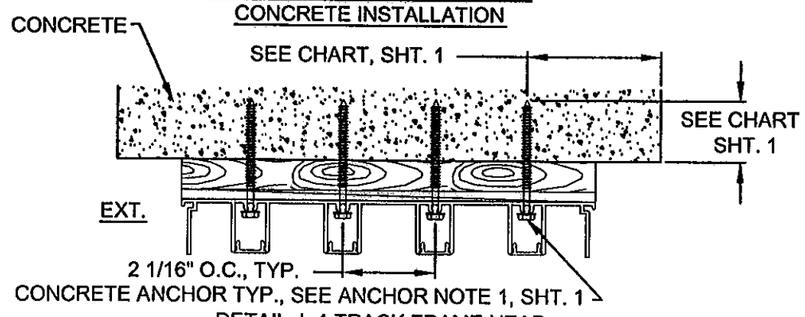

DETAIL J, 4-TRACK FRAME HEAD
CONCRETE INSTALLATION

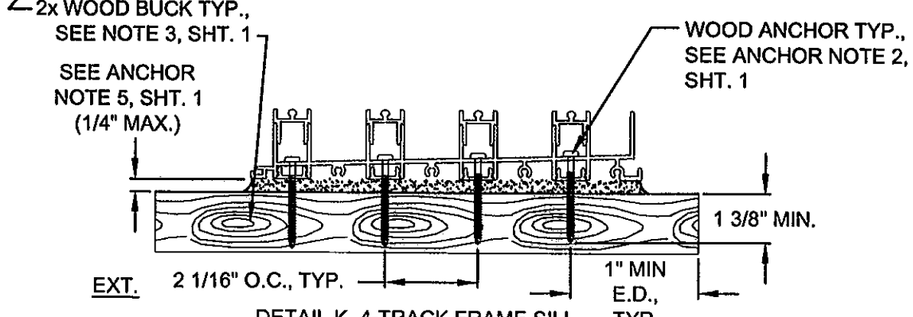

DETAIL K, 4-TRACK FRAME SILL
WOOD INSTALLATION

Revsd By:	Date:	Revisions:	
J.J.	10/11/11	D	NO CHANGE THIS SHEET
SMC	03/15/10	C	PER MIAMI DADE COMMENTS
SMC	03/01/10	B	PER MIAMI DADE COMMENTS
Drawn By: SMC	Date: 08/05/09	Checked By:	Date:

1070 TECHNOLOGY DRIVE
NOKOMIS, FL 34275

P.O. BOX 1529
NOKOMIS, FL 34274

PGT®

Description: ANCHORAGE DETAILS

Title: SERIES 670 ALUM. SGD - NON-IMPACT

Series/Model:	Scale:	Sheet:	Drawing No.	Rev:
SGD670	NTS	15 of 25	PGT0001	D

PRODUCT REVISED
as complying with the Florida Building Code
Acceptance No. 11-1018.17
Expiration Date 4/7/15
By Ishaq I. Chanda
Miami Dade Product Control

ANTHONY LYNN MILLER
LICENSE
No. 58705
STATE OF FLORIDA
PROFESSIONAL ENGINEER
10/11/11

A. LYNN MILLER, P.E.
P.E.# 58705

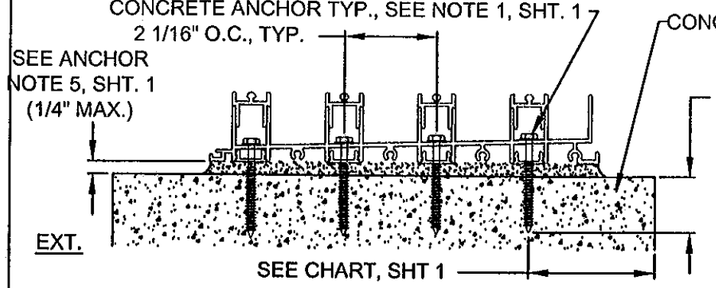

DETAIL L, 4-TRACK FRAME SILL CONCRETE INSTALLATION

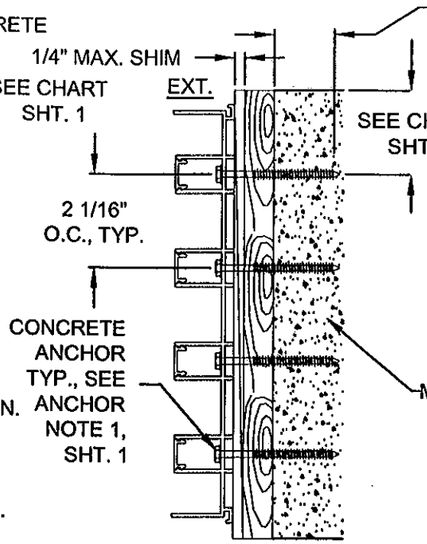

DETAIL O, 4-TRACK FRAME JAMB CONCRETE INSTALLATION

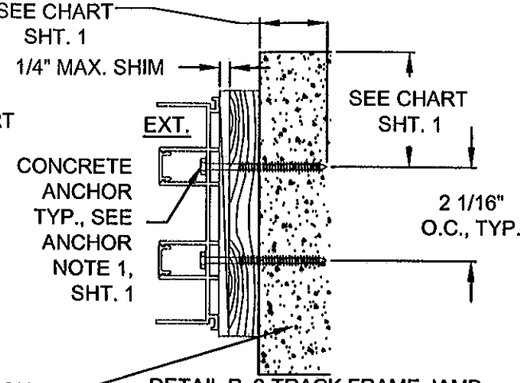

DETAIL P, 2-TRACK FRAME JAMB CONCRETE INSTALLATION

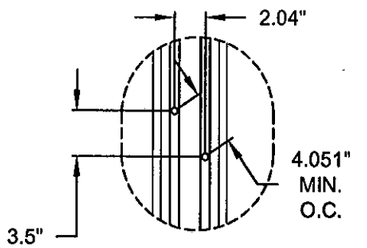

TYPICAL JAMB CLUSTER FOR DETAILS M, N, O, P, Q & R

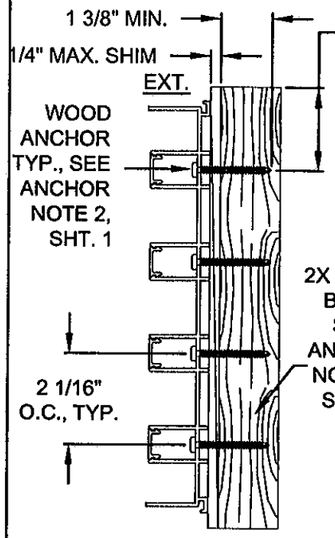

DETAIL M, 4-TRACK FRAME JAMB WOOD INSTALLATION

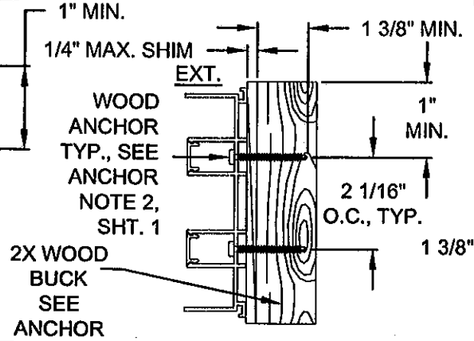

DETAIL N, 2-TRACK FRAME JAMB WOOD INSTALLATION

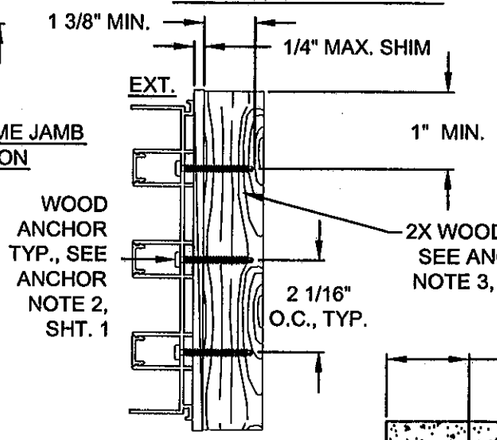

DETAIL Q, 3-TRACK FRAME JAMB WOOD INSTALLATION

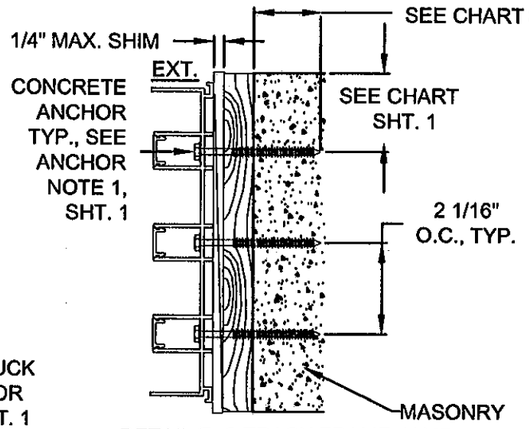

DETAIL R, 3-TRACK FRAME JAMB CONCRETE INSTALLATION

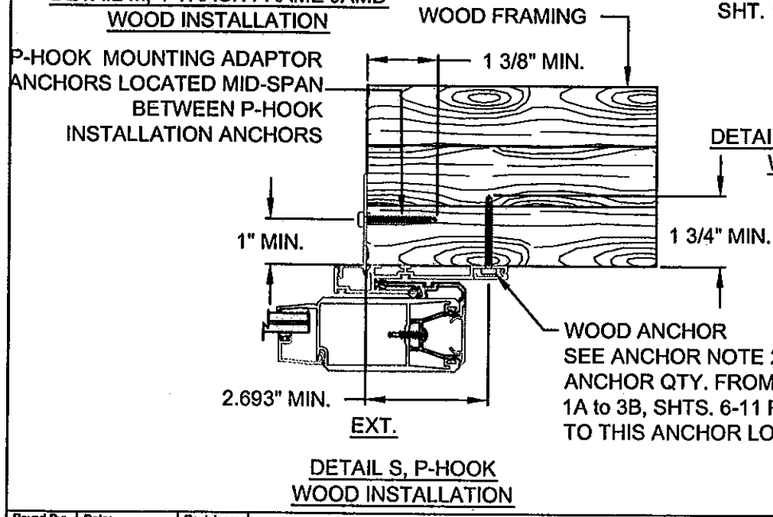

DETAIL S, P-HOOK WOOD INSTALLATION

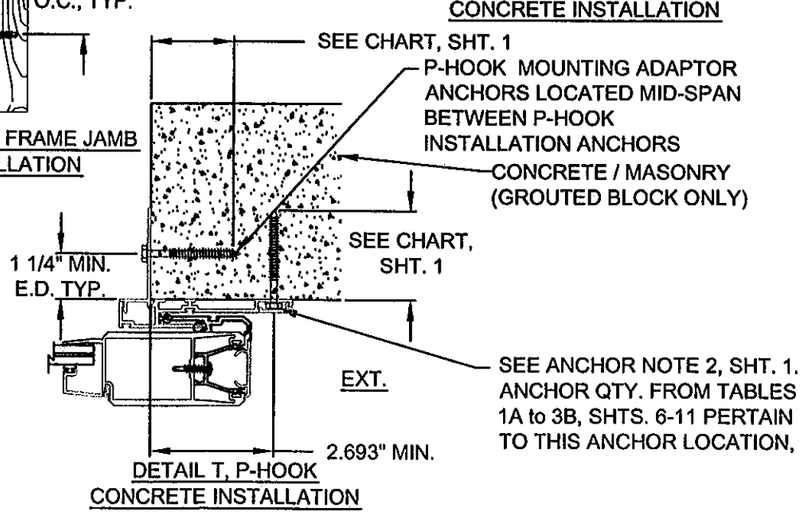

DETAIL T, P-HOOK CONCRETE INSTALLATION

PRODUCT REVISED as complying with the Florida Building Code
Acceptance No. 11-1018.17
Expiration Date 4/7/15
By Ishaq I. Chanda
Miami Dade Product Control

Revsd By:	Date:	Revisions:	
J.J.	10/11/11	D	NO CHANGE THIS SHEET
SMC	03/16/10	C	PER MIAMI DADE COMMENTS
SMC	03/01/10	B	PER MIAMI DADE COMMENTS
Drawn By: SMC	Date: 08/05/09	Checked By:	Date:

1070 TECHNOLOGY DRIVE
NOKOMIS, FL 34275
P.O. BOX 1529
NOKOMIS, FL 34274

PGT®

Description: ANCHORAGE DETAILS
Title: SERIES 670 ALUM. SGD - NON-IMPACT

Series/Model:	Scale:	Sheet:	Drawing No.	Rev:
SGD670	NTS	16 of 25	PGT0001	D

ANTHONY LYNN MILLER LICENSE No. 58705 STATE OF FLORIDA PROFESSIONAL ENGINEER
A. LYNN MILLER, P.E.
P.E.# 58705

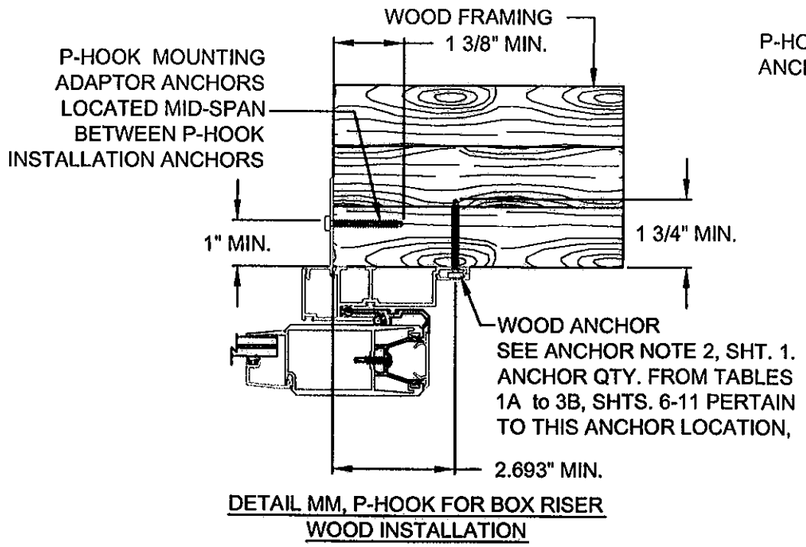

DETAIL MM, P-HOOK FOR BOX RISER
WOOD INSTALLATION

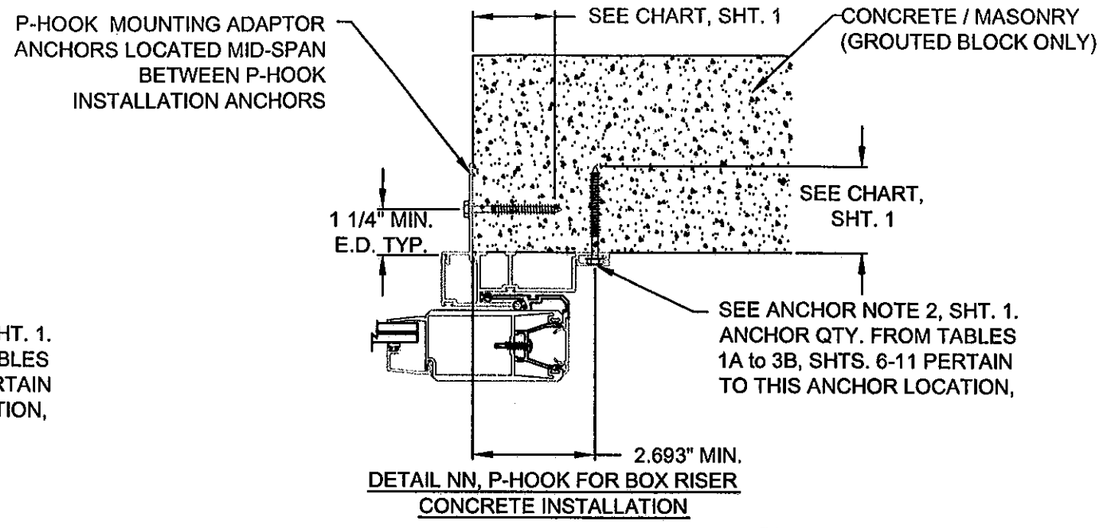

DETAIL NN, P-HOOK FOR BOX RISER
CONCRETE INSTALLATION

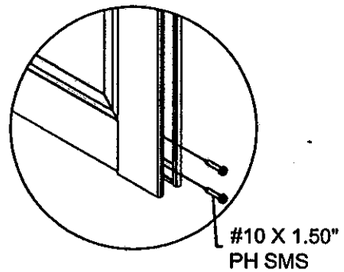

PANEL CORNER
DETAIL

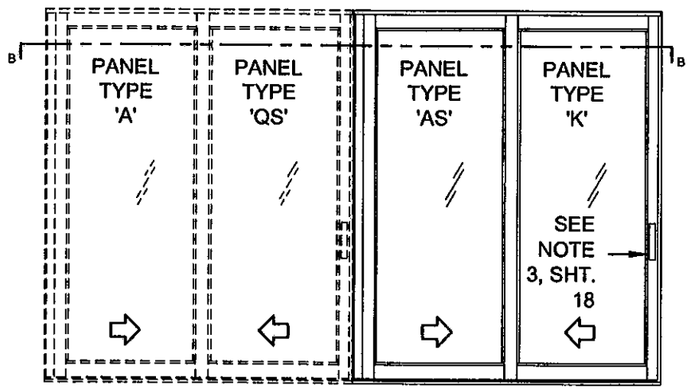

DLO WIDTH = NOM. PANEL WIDTH - 7"
DLO HEIGHT = NOM. PANEL HEIGHT - 8.25"

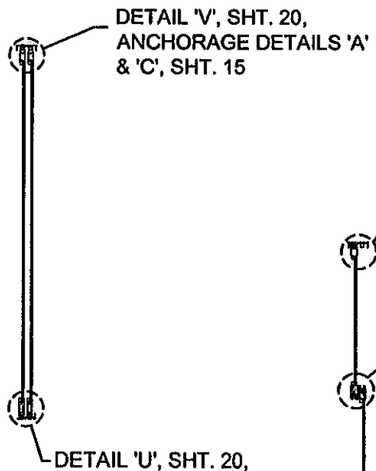

XX-90° CORNER-XX (2 TRACK INSIDE 90° CORNER)
*SEE APPLICABLE ASTRAGAL & INTERLOCK PER DP TABLES

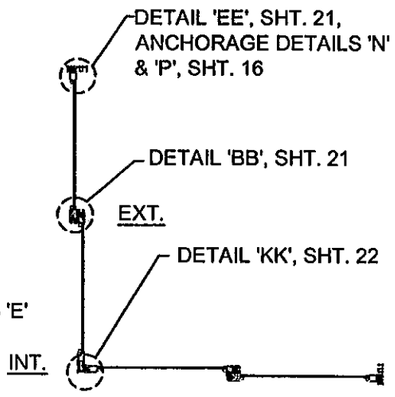

HORIZONTAL SECTION B-B

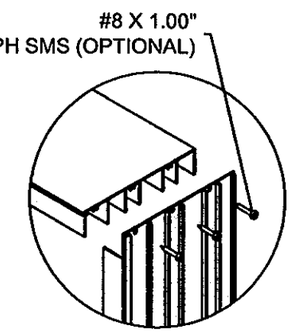

FRAME CORNER
DETAIL

PRODUCT REVISED
to comply with the Florida Building Code
Acceptance No. 11-1018.17
Expiration Date 12-7-15
By Ishaq I. Ghanchi
Miami Dade Product Control

Revsd By:	Date:	Revisions:	
J.J.	10/11/11	D	NO CHANGE THIS SHEET
SMC	03/15/10	C	PER MIAMI DADE COMMENTS
SMC	03/01/10	B	PER MIAMI DADE COMMENTS
Drawn By: SMC	Date: 08/05/09	Checked By:	Date:

1070 TECHNOLOGY DRIVE
NOKOMIS, FL 34275
P.O. BOX 1529
NOKOMIS, FL 34274

PGT®

Description: ANCHORAGE DETAILS / SAMPLE ELEVATION
Title: SERIES 670 ALUM. SGD - NON-IMPACT

Series/Model:	Scale:	Sheet:	Drawing No.	Rev:
SGD670	NTS	17 of 25	PGT0001	D

ANTHONY LYNN MILLER
LICENSE
No. 58705
STATE OF FLORIDA
PROFESSIONAL ENGINEER
A. LYNN MILLER, P.E.
P.E.# 58705

NOTES:

1. SEE SHT. 19 FOR INDIVIDUAL PANEL CONFIGURATIONS AS APPLICABLE. PLEASE SEE DP CHARTS FOR MAX PANEL HEIGHT AND WIDTH. PLEASE SEE SHTS. 20-22 FOR SECTION DETAILS AND SHTS. 6-17 FOR ANCHORAGE DETAILS.
2. DLO WIDTH = NOM. PANEL WIDTH - 7" DLO HEIGHT = NOM. PANEL HEIGHT - 8.25"
3. (1) LOCK (ITEMS 70 & 107-110) AT EACH LOCKSTILE, LOCKING INTO KEEPER (ITEM 103) AT FRAME JAMB OR ASTRAGAL.
4. PLEASE SEE APPLICABLE ASTRAGAL & INTERLOCK COMBINATIONS PER DP TABLES.

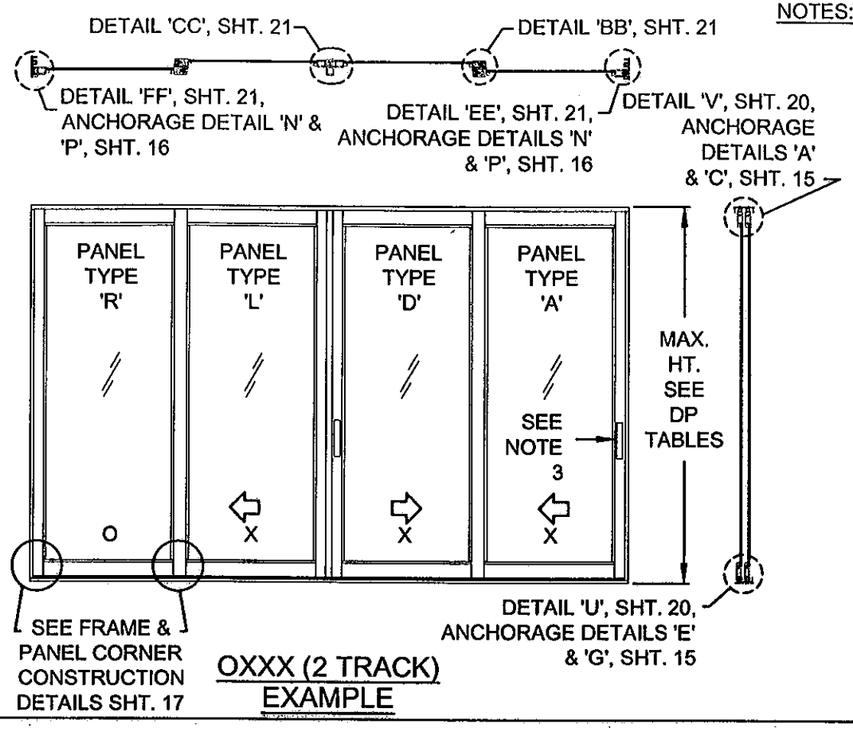

OXXX (2 TRACK) EXAMPLE

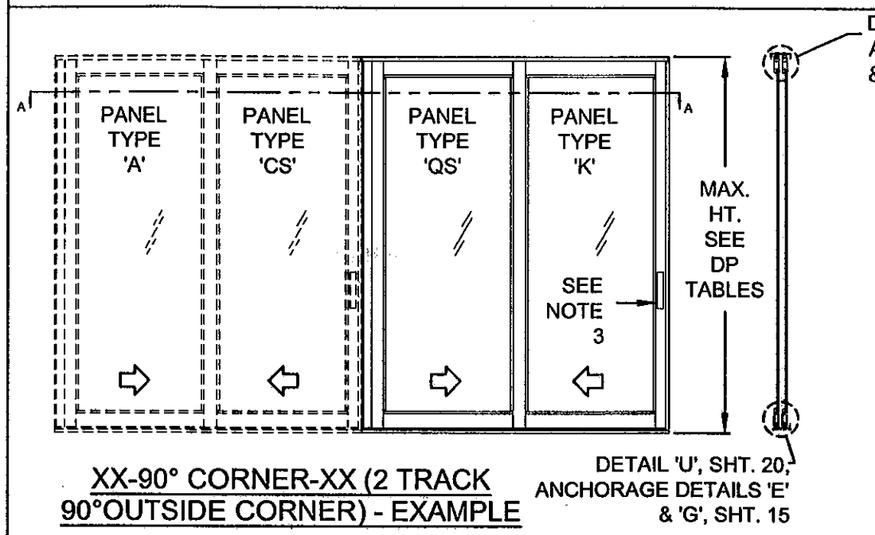

XX-90° CORNER-XX (2 TRACK 90°OUTSIDE CORNER) - EXAMPLE

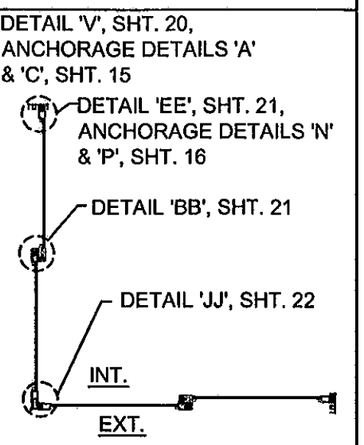

HORIZONTAL SECTION A-A

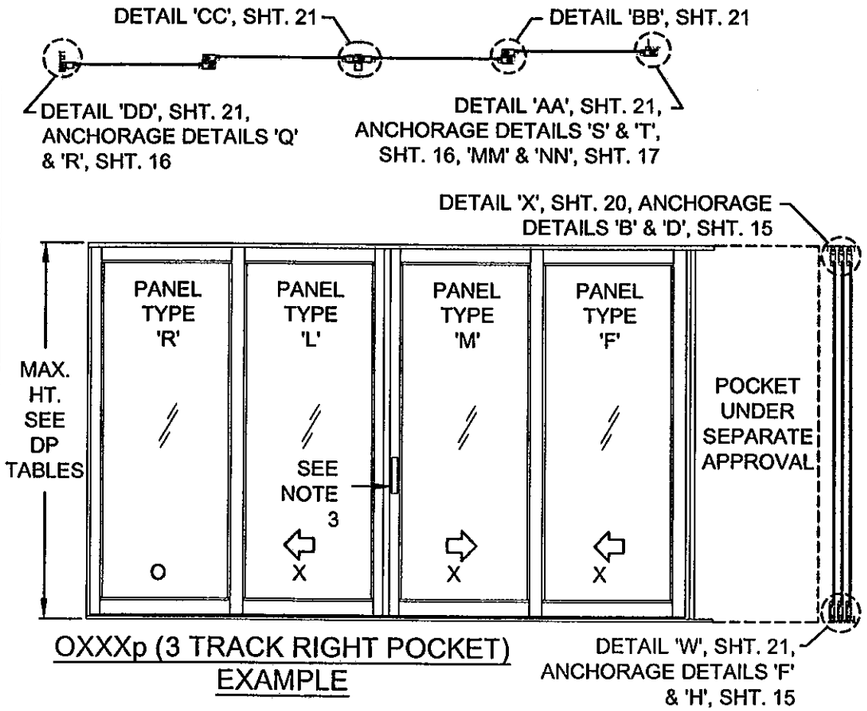

OXXXp (3 TRACK RIGHT POCKET) EXAMPLE

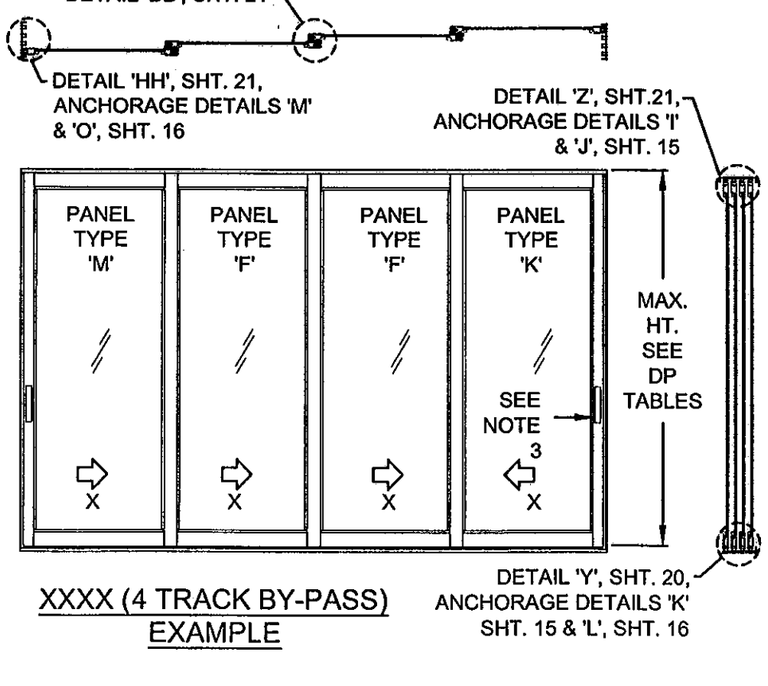

XXXX (4 TRACK BY-PASS) EXAMPLE

PRODUCT REVISED
as complying with the Florida Building Code
Acceptance No 11-1018.17
Expiration Date 4/7/15
By Ishaq I. Chanda
Miami Dade Product Control

ANTHONY LYNN MILLER LICENSE No. 58705 STATE OF FLORIDA PROFESSIONAL ENGINEER
A. LYNN MILLER, P.E.
P.E.# 58705

Revsd By:	Date:	Revisions:	
J.J.	10/11/11	D	NO CHANGE THIS SHEET
SMC	03/15/10	C	PER MIAMI DADE COMMENTS
SMC	03/01/10	B	PER MIAMI DADE COMMENTS
Drawn By: SMC	Date: 08/05/09	Checked By: RJA	Date:

1070 TECHNOLOGY DRIVE
NOKOMIS, FL 34275
P.O. BOX 1529
NOKOMIS, FL 34274

PGT®

Description: EXAMPLE ELEVATIONS
Title: SERIES 670 ALUM. SGD - NON-IMPACT

Series/Model:	Scale:	Sheet:	Drawing No.	Rev:
SGD670	NTS	18 of 25	PGT0001	D

PANEL LETTER			
P	SINGLE INTERLOCK		FIXED LOCKSTILE
R	FIXED LOCKSTILE		SINGLE INTERLOCK
T (BOX OUT)	ASTRAGAL OUT		FIXED LOCKSTILE
T (BOX IN)	ASTRAGAL IN		FIXED LOCKSTILE
S (BOX OUT)	FIXED LOCKSTILE		ASTRAGAL OUT
S (BOX IN)	FIXED LOCKSTILE		ASTRAGAL IN
L (BOX OUT)	SINGLE INTERLOCK		ASTRAGAL OUT
LR (BOX OUT)	ASTRAGAL OUT		SINGLE INTERLOCK
N (BOX OUT)	ASTRAGAL IN		SINGLE INTERLOCK
C (BOX IN)	SINGLE INTERLOCK		ASTRAGAL IN
B	SINGLE INTERLOCK		SINGLE INTERLOCK
F	SINGLE INTERLOCK		SINGLE INTERLOCK
E	SINGLE INTERLOCK		SINGLE INTERLOCK
K	SINGLE INTERLOCK		LOCKSTILE
U (BOX OUT)	ASTRAGAL OUT		LOCKSTILE
U (BOX IN)	ASTRAGAL IN		LOCKSTILE
A	SINGLE INTERLOCK		LOCKSTILE
D	LOCKSTILE		SINGLE INTERLOCK
J (BOX OUT)	LOCKSTILE		ASTRAGAL OUT

PANEL LETTER			
J (BOX IN)	LOCKSTILE		ASTRAGAL IN
M	LOCKSTILE		SINGLE INTERLOCK
CS	CORNER RECEIVER		SINGLE INTERLOCK
SC	SINGLE INTERLOCK		CORNER RECEIVER
QS	CORNER LOCKSTILE		SINGLE INTERLOCK
SQ	SINGLE INTERLOCK		CORNER LOCKSTILE
AS	CORNER RECEIVER		SINGLE INTERLOCK
SA	SINGLE INTERLOCK		CORNER RECEIVER
CI	CORNER LOCKSTILE		SINGLE INTERLOCK
IC	SINGLE INTERLOCK		CORNER LOCKSTILE
CF	CORNER RECEIVER		FIXED LOCKSTILE
FC	FIXED LOCKSTILE		CORNER RECEIVER
PP	SINGLE INTERLOCK		FIXED LOCKSTILE
RR	FIXED LOCKSTILE		SINGLE INTERLOCK

NOTE:

1. SEE DP TABLES FOR PANEL WIDTH & APPLICABLE ASTRAGAL & INTERLOCKS.

⇧ INTERIOR
(ALL PANEL TYPES)
⇩ EXTERIOR

PRODUCT REVISED
as complying with the Florida
Building Code
Acceptance No 11-1018.17
Expiration Date 4/7/15
By Ishaq I. Chanda
Miami Dade Product Control

ANTHONY LYNN MILLER
LICENSE
No. 58705
10/11/11
STATE OF FLORIDA
PROFESSIONAL ENGINEER

A. LYNN MILLER, P.E.
P.E.# 58705

Revsd By:	Date:	Revisions:	
J.J.	10/11/11	D	NO CHANGE THIS SHEET
SMC	03/15/10	C	PER MIAMI DADE COMMENTS
SMC	03/01/10	B	PER MIAMI DADE COMMENTS
Drawn By: SMC	Date: 08/05/09	Checked By:	Date:

1070 TECHNOLOGY DRIVE
NOKOMIS, FL 34275

P.O. BOX 1529
NOKOMIS, FL 34274

PGT®

Description: PANEL TYPES

Title: SERIES 670 ALUM. SGD - NON-IMPACT

Series/Model:	Scale:	Sheet:	Drawing No.	Rev:
SGD670	NTS	19 of 25	PGT0001	D

SILL RISERS OPTIONS

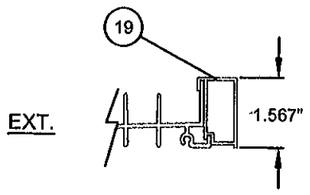

FLUSH BOX SILL RISER

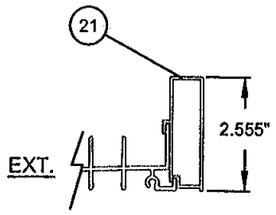

LOW BOX SILL RISER

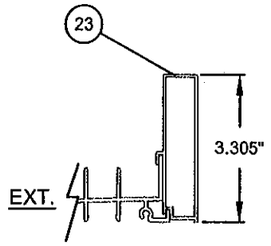

MEDIUM BOX SILL RISER

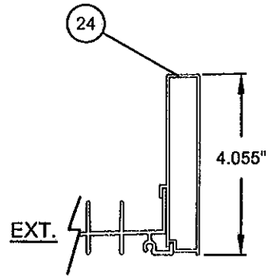

HIGH BOX SILL RISER

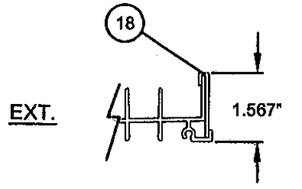

FLUSH FLAT SILL RISER

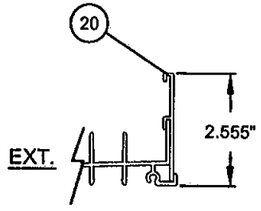

LOW FLAT SILL RISER

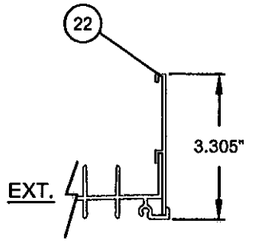

MEDIUM FLAT SILL RISER

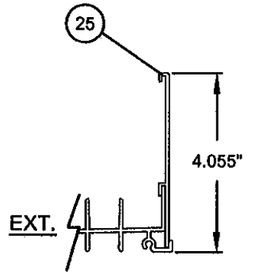

HIGH FLAT SILL RISER

EXTERIOR INTERIOR
(ALL VERT. SECTIONS)

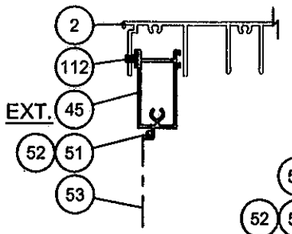

DETAIL 'LL' SCREEN AT HEAD

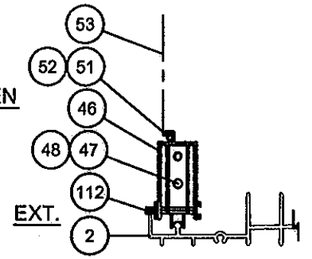

DETAIL 'MM' SCREEN AT SILL

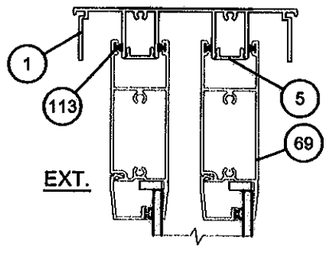

DETAIL 'V'

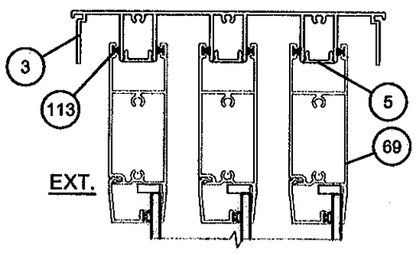

DETAIL 'X'

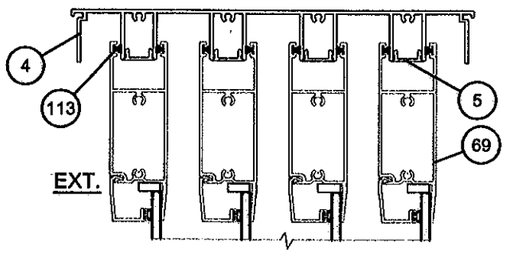

DETAIL 'Z'

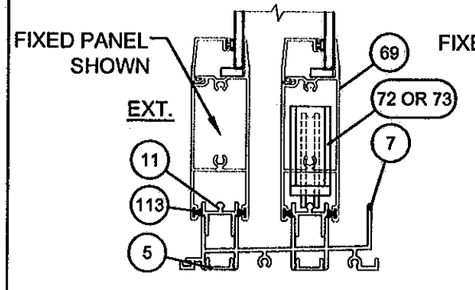

DETAIL 'U'

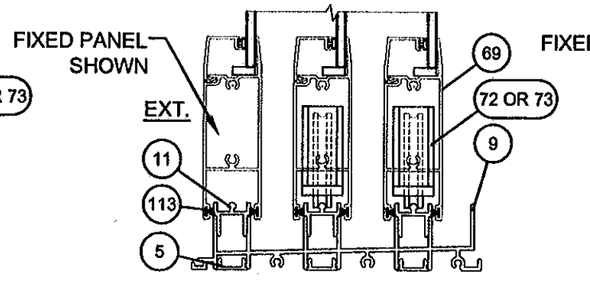

DETAIL 'W'

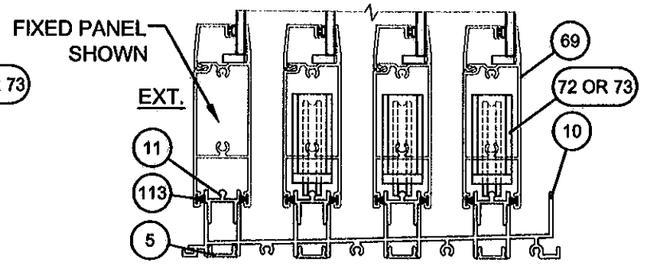

DETAIL 'Y'

PRODUCT REVISED
to complying with the Florida Building Code
Acceptance No. 11-1018.17
Expiration Date 4/7/15
By Ishaq I. Chanda
Miami Dade Product Control

ANTHONY LYNN MILLER
LICENSE
No. 58705
STATE OF FLORIDA
PROFESSIONAL ENGINEER
A. LYNN MILLER, P.E.
P.E.# 58705

Revsd By:	Date:	Revisions:	
J.J.	10/11/11	D	NO CHANGE THIS SHEET
SMC	03/15/10	C	PER MIAMI DADE COMMENTS
SMC	03/01/10	B	PER MIAMI DADE COMMENTS
Drawn By: SMC	Date: 08/05/09	Checked By: R.IA	Date:

1070 TECHNOLOGY DRIVE
NOKOMIS, FL 34275
P.O. BOX 1529
NOKOMIS, FL 34274

PGT®

Description: VERTICAL SECTION DETAILS
Title: SERIES 670 ALUM. SGD - NON-IMPACT

Series/Model:	Scale:	Sheet:	Drawing No.	Rev:
SGD670	NTS	20 of 25	PGT0001	D

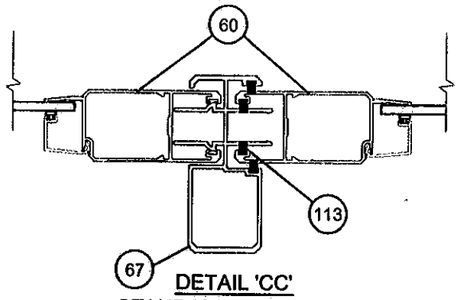

DETAIL 'CC'
STANDARD ASTRAGAL
AND STILES

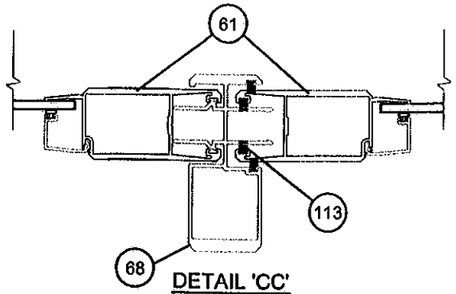

DETAIL 'CC'
HEAVY DUTY ASTRAGAL
AND STILES

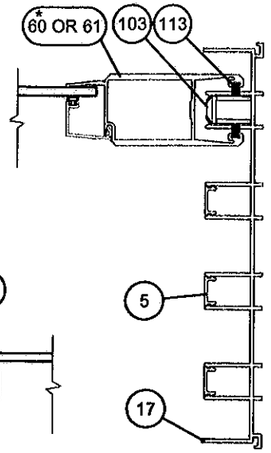

DETAIL 'HH'

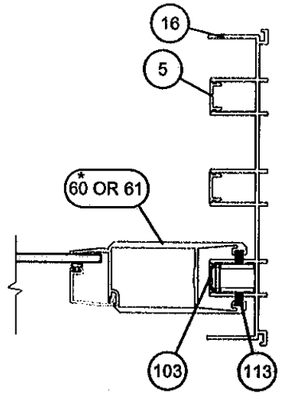

DETAIL 'II'

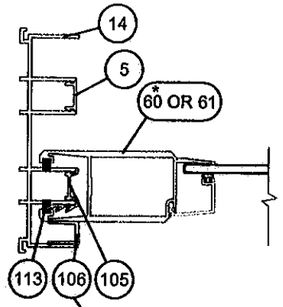

AT MIDSPAN
DETAIL 'FF' (FIXED PANEL)

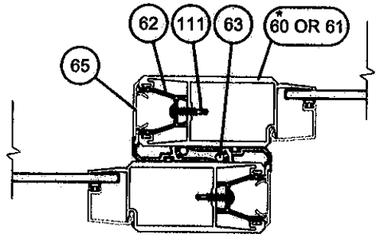

DETAIL 'BB'

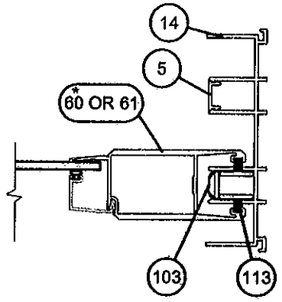

DETAIL 'EE'

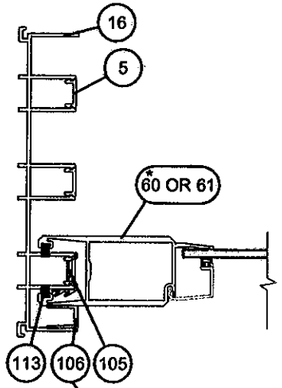

AT MIDSPAN
DETAIL 'DD' (FIXED PANEL)

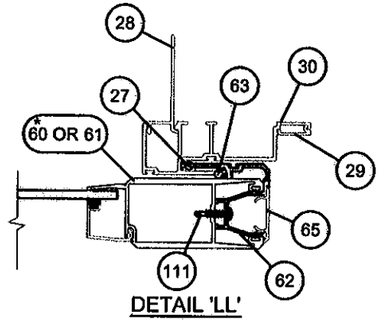

DETAIL 'LL'

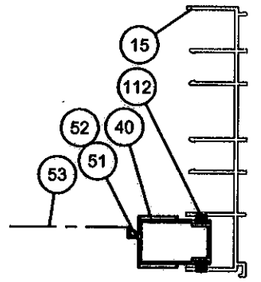

DETAIL 'NN' SCREEN
AT JAMB

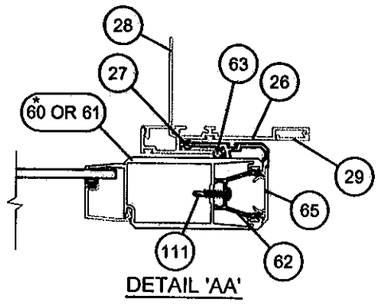

DETAIL 'AA'

INTERIOR
(ALL HORIZ. SECTIONS)
EXTERIOR

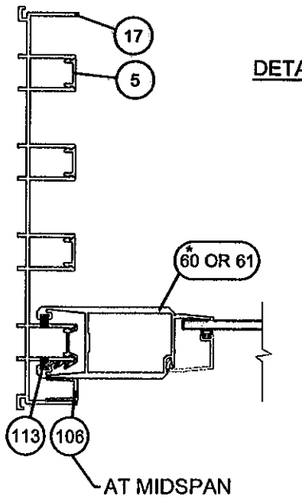

AT MIDSPAN
DETAIL 'GG' (FIXED PANEL)

*ITEM 61 SHOWN, ITEM 60 ALSO APPLICABLE, SEE TABLES 1-3, SHTS. 6-8 FOR DP (PSF) ASSOCIATED WITH STILE

*PRODUCT REVISED
as complying with the Florida Building Code
Acceptance No. 11-1018.17
Expiration Date 4/7/15
By Ishaq I. Chanda
Miami Dade Product Control

Revsd By:	Date:	Revisions:	
J.J.	10/11/11	D	NO CHANGE THIS SHEET
SMC	03/15/10	C	PER MIAMI DADE COMMENTS
SMC	03/01/10	B	PER MIAMI DADE COMMENTS
Drawn By: SMC	Date: 08/05/09	Checked By: RAJ	Date:

1070 TECHNOLOGY DRIVE
NOKOMIS, FL 34275
P.O. BOX 1529
NOKOMIS, FL 34274

PGT®

Description: HORIZONTAL SECTION DETAILS
Title: SERIES 670 ALUM. SGD - NON-IMPACT

Series/Model:	Scale:	Sheet:	Drawing No.	Rev:
SGD670	NTS	21 of 25	PGT0001	D

ANTHONY LYNN MILLER
LICENSE
No. 58705
STATE OF FLORIDA
PROFESSIONAL ENGINEER
A. LYNN MILLER, P.E.
P.E.# 58705

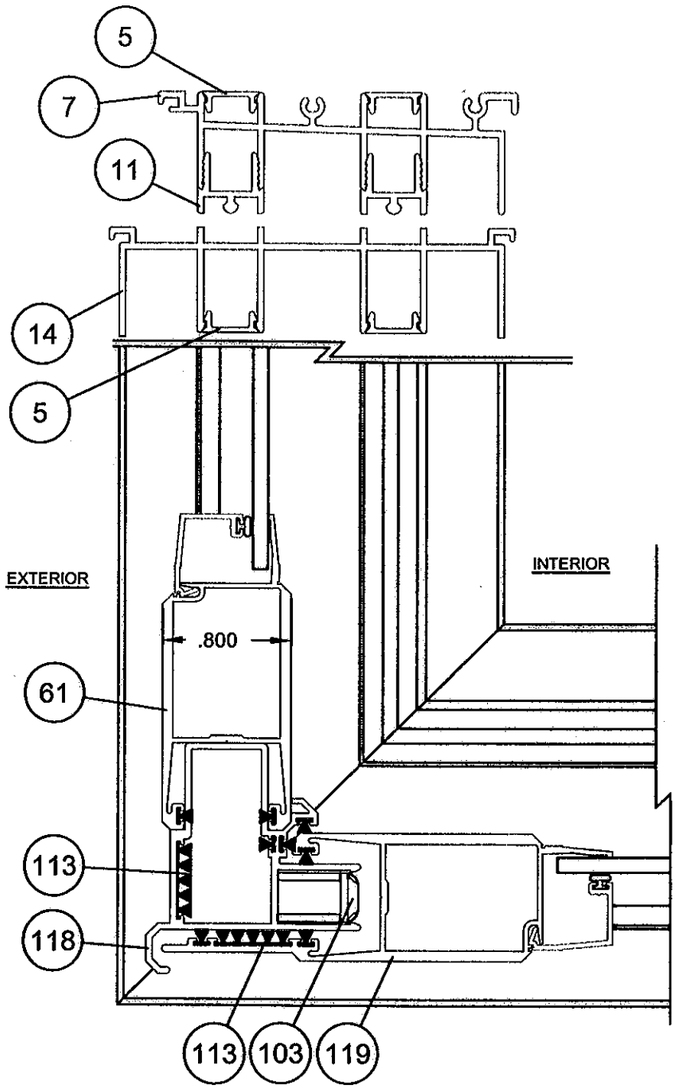

DETAIL 'JJ'

(90° OUTSIDE CORNER, 2-TRACK SHOWN)

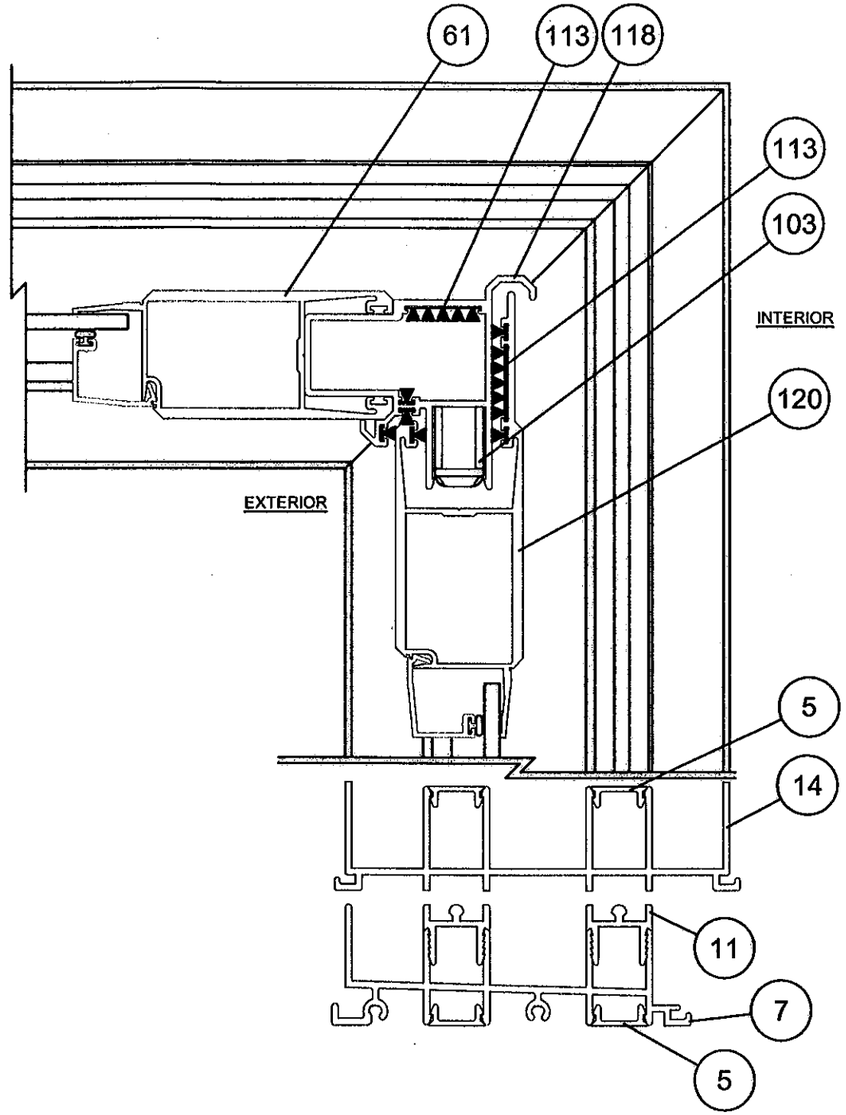

DETAIL 'KK'

(90° INSIDE CORNER, 2 TRACK SHOWN)

PRODUCT REVISED
to complying with the Florida
Building Code
Acceptance No 11-1018.17
Expiration Date 6/27/15
By Ishaq I. Chanda
Miami Dade Product Control

ANTHONY LYNN MILLER
LICENSE
No. 58705
STATE OF FLORIDA
PROFESSIONAL ENGINEER
10/11/11
A. LYNN MILLER, P.E.
P.E.# 58705

Revised By:	Date:	Revisions:	
J.J.	10/11/11	D	NO CHANGE THIS SHEET
SMC	03/15/10	C	PER MIAMI DADE COMMENTS
SMC	03/01/10	B	PER MIAMI DADE COMMENTS
Drawn By: SMC	Date: 08/05/09	Checked By: RJA	Date:

1070 TECHNOLOGY DRIVE
NOKOMIS, FL 34275

P.O. BOX 1529
NOKOMIS, FL 34274

PGT®

Description: HORIZONTAL SECTION DETAILS, CORNERS

Title: SERIES 670 ALUM. SGD - NON-IMPACT

Series/Model:	Scale:	Sheet:	Drawing No.	Rev:
SGD670	NTS	22 of 25	PGT0001	D

ITEM	PGT Dwg. #	PGT. #	Description
1	17306	617306	2-TRACK HEAD
2	17303	617303	2-TRACK HEAD WITH SCREEN RAIL
3	17309	617309	3-TRACK HEAD
4	17312	617312	4-TRACK HEAD
5	17314	617314	FRAME SCREW COVER
6	17317	617317	FRAME HEAD/JAMB ADD-ON
7	17304	617304	2-TRACK SILL
8	17301	617301	2-TRACK SILL WITH SCREEN RAIL
9	17307	617307	3-TRACK SILL
10	17310	617310	4-TRACK SILL
11	17313	617313	FRAME SILL TRACK INSERT
12	17315	617315	FRAME SILL SCREEN ADD-ON
13	17316	617316	FRAME SILL SCREEN END ADD-ON
14	17305	617305	2-TRACK JAMB
15	17302	617302	2-TRACK JAMB WITH SCREEN RAIL
16	17308	617308	3-TRACK JAMB
17	17311	617311	4-TRACK JAMB
18	17322	617322	SILL RISER - 0
19	17319	617319	SILL RISER - 0 HOLLOW
20	17321	617321	SILL RISER - LOW FLAT
21	17318	617318	SILL RISER - LOW HOLLOW
22	17355	617355	SILL RISER - MED FLAT
23	17354	617354	SILL RISER - MED HOLLOW
24	17320	617320	SILL RISER - HIGH HOLLOW
25	17323	617323	SILL RISER - HIGH FLAT
26	17333	617333	POCKET DOOR P-HOOK
27	7070	67070	NEOPRENE BULB WSTP FOR P-HOOK
28	17334	617334	POCKET DOOR P-HOOK MOUNT
29	17335	617335	P-HOOK COVER
30	17348	617348	POCKET DOOR P-HOOK FOR BOX RISER

OPTIONAL PARTS (NOT SHOWN IN DRAWING)

40	4319	612258	SCREEN SIDE RAIL - LOCKSTILE
41		7LOCKWGSK	SCREEN LOCKSET
42		41818	SCREEN KEEPER SPACER SET
43	8152	68152	SCREEN INTERLOCK ADAPTER
44	4428	64428	SCREEN DOUBLE INTERLOCK
45	4317	612256	SCREEN TOP RAIL
46	4318	612257	SCREEN BOTTOM RAIL
47	668	7SRAZ	STANDARD ROLLER
48	668	7SRAX	STANDARD ROLLER - ST. STL.
49	4344	64344	SCREEN ASTRAGAL
50	17349	617349	OXO SCREEN ASTRAGAL ADAPTER
51	1692	61692	SCREEN SPLINE - .165
52	1694	61694	SCREEN SPLINE - .150
53		61816C20	SCREEN CLOTH
54	1725		1/2" x 4" x 1/16" SITTING BLOCK
55	1726		1" X 4" X 1/16" SITTING BLOCK

200		GLASS	3/16 TEMPERED
201		GLASS	1/4 TEMPERED

ITEM	PGT Dwg. #	PGT. #	Description
60	17325	617325	PANEL STILE
61	17326	617326	PANEL STILE (HEAVY DUTY)
62	17327	617327	INTERLOCK ADAPTOR
63	1225	6TP248	VINYL BULB WSTP. - THIN (INSIDE INTERLOCK)
64	1729	71729	SILL END WEATHERSTRIP PAD
65	17328	617328	INTERLOCK SCREW COVER
67	17329	617329	ASTRAGAL
68	17339	617339	HEAVY DUTY ASTRAGAL
69	17324	617324	TOP & BOTTOM RAIL
70	17350	417350	WEATHERSTRIP EXTENSION (INJECTION MOLDED)
71	1695	71695	1 1/2" X 1" X 3/4" HIGH FIN SEAL DUST PLUGS
72	8153	78153X	TANDEM ST. STL. ROLLER ASSY.
73	8153	78153N	TANDEM NYLON ROLLER ASSY.
74		SILICONE	DOW 899 OR 995
75	8185	78185X	GEMINI MORTICE LOCK W/LONG TRIM PLATE (3-PLY)
76		71032X1FPFX	#10-32 X 1" FL. SS SCREW W/ TYPE "F" TIP
77		7103239	10-32 STEEL ZINC U-NUT
78	17358	617358	3/16 & 1/4 OGEE BEAD HORIZONTAL
79	17357	617357	1" IG BEAD HORIZONTAL
82	1224	6TP247K	VINYL BULB WEATHERSTRIP
83		IGTAPE	1/2"X 1/16" SINGLE SIDE ADHESIVE TAPE FOR IG BEAD

100	8052	48052	ROLLER ADJ. HOLE PLUG
101		72087	JAMB BUMPER
102	1696	71696	DUST PLUG
103	8186	78186X	1" KEEPER
104	653	7SDKEEP	SCREEN LOCK KEEPER
105	17344	617344	FIXED PANEL CLIP - 6" LONG
106	17352	617352	EXTERIOR FIXED PANEL RETAINER
107	1739	71739	HANDLE KIT - INTERIOR RAISED WITH THUMB TURN
108	1740	71740	HANDLE KIT - RAISED EXTERIOR HANDLE
109	1731	78162SN	HANDLE KIT - RECESSED INTERIOR WITH THUMB TURN
110	1732	78178	HANDLE KIT - RECESSED EXTERIOR PULL
111		710X34PPSDAX	#10 X 3/4" PH. PN. TEK - S.S.
112	1235	67S16	WSTP, .270 X .170 - FIN SEAL
113	1712	64066	.187 X .230 FINSEAL
114		710X115PPX	#10X 1 1/2"
115		710XPPT	#10X 1"
116		720X1X	#14-20 X 1" ST. STL.
117		720X112X	#14-20 X 1.5" ST. STL.
118	17336	617336	CORNER RECEIVER
119	17337	617337	OUTSIDE CORNER ASTRAGAL
120	17338	6117338	INSIDE CORNER ASTRAGAL

208		GLASS	IG 3/16-3/16 FULLY TEMPERED
209		GLASS	IG 1/4-1/4 FULLY TEMPERED

NOTE: ALL ALUMINUM = 6063-T6

PRODUCT REVISED
as complying with the Florida Building Code
Acceptance No. 11-1018.17
Expiration Date 4/7/15
By Ishaq I. Chanda
Miami Dade Product Control

ANTHONY LYNN MILLER
LICENSE
No. 58705
STATE OF FLORIDA
PROFESSIONAL ENGINEER
A. LYNN MILLER, P.E.
P.E.# 58705

Revsd By:	Date:	Revisions:	
J.J.	10/11/11	D	NO CHANGE THIS SHEET
SMC	03/15/10	C	PER MIAMI DADE COMMENTS
SMC	03/01/10	B	PER MIAMI DADE COMMENTS
Drawn By: SMC	Date: 08/05/09	Checked By: RJA	Date:

1070 TECHNOLOGY DRIVE
NOKOMIS, FL 34275
P.O. BOX 1529
NOKOMIS, FL 34274

Description: PARTS LIST
Title: SERIES 670 ALUM. SGD - NON-IMPACT

Series/Model:	Scale:	Sheet:	Drawing No.	Rev:
SGD670	NTS	23 of 25	PGT0001	D

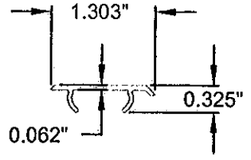

INTERLOCK SCREW COVER
(65) MAT'L: 6063-T6

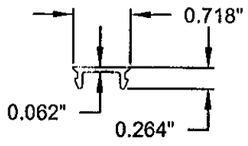

FRAME SCREW COVER
(5) MAT'L: 6063-T6

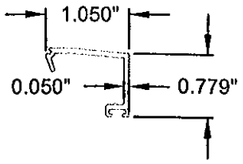

GLAZING BEAD (SINGLE)
(78) MAT'L: 6063-T6

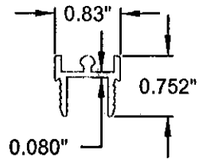

SILL TRACK
(11) MAT'L: 6063-T6

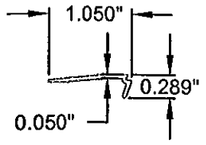

GLAZING BEAD (I.G.)
(79) MAT'L: 6063-T6

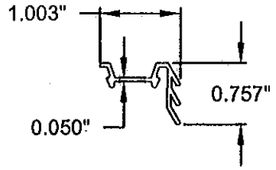

FIXED PANEL CLIP
(105) MAT'L: 6063-T6

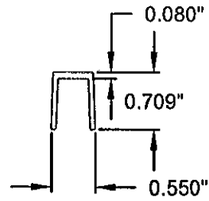

FIXED PANEL RETAINER
(106) MAT'L: 6063-T6

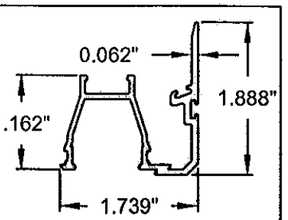

INTERLOCK
(62) MAT'L: 6063-T6

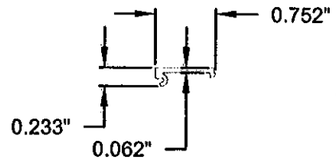

P-HOOK SCREW COVER
(29) MAT'L: 6063-T6

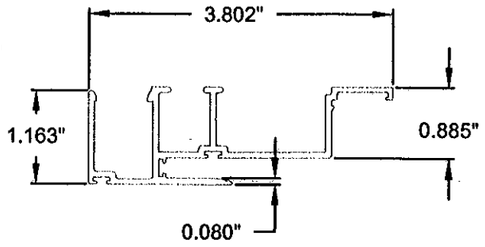

P-HOOK FOR BOX RISER
(30) MAT'L: 6063-T6

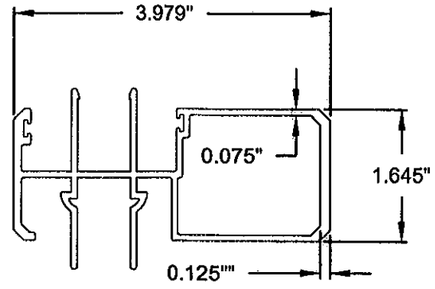

STANDARD ASTRAGAL
(67) MAT'L: 6063-T6

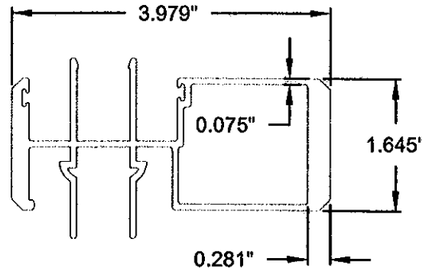

HEAVY DUTY ASTRAGAL
(68) MAT'L: 6063-T6

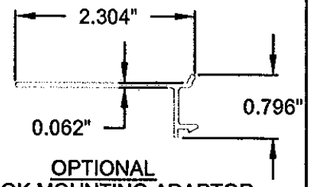

OPTIONAL
P-HOOK MOUNTING ADAPTOR
(28) MAT'L: 6063-T6

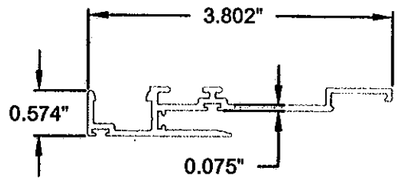

P-HOOK
(26) MAT'L: 6063-T6

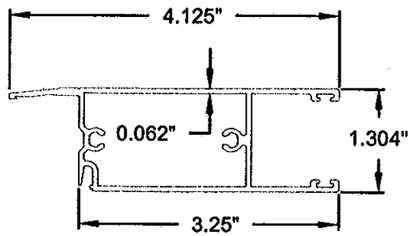

TOP/BOTTOM BOTTOM RAIL
(69) MAT'L: 6063-T6

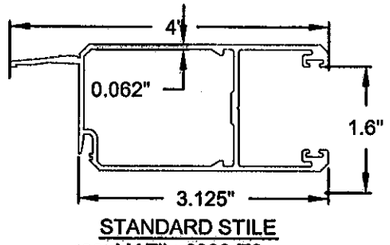

STANDARD STILE
(60) MAT'L: 6063-T6

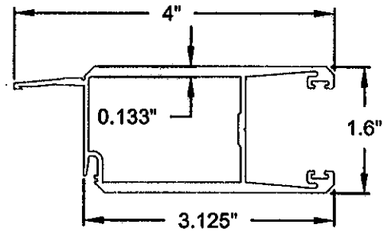

HEAVY DUTY STILE
(61) MAT'L: 6063-T6

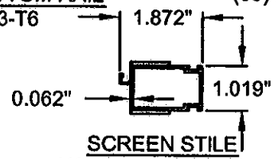

SCREEN STILE
(40) MAT'L: 6063-T6

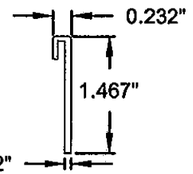

FLUSH FLAT SILL RISER
(18) MAT'L: 6063-T6

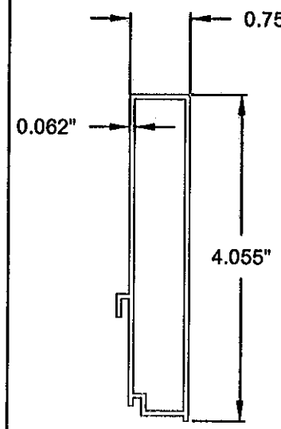

HIGH BOX SILL RISER
(24) MAT'L: 6063-T6

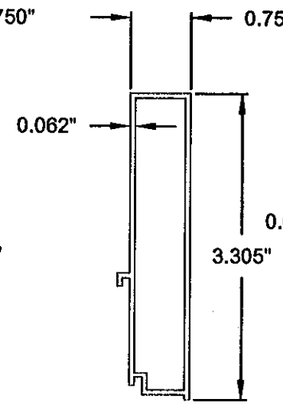

MEDIUM BOX SILL RISER
(23) MAT'L: 6063-T6

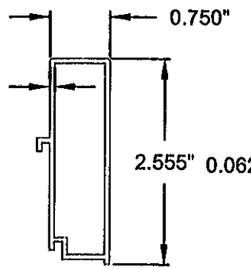

LOW BOX SILL RISER
(21) MAT'L: 6063-T6

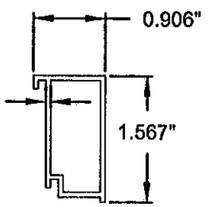

FLUSH BOX SILL RISER
(19) MAT'L: 6063-T6

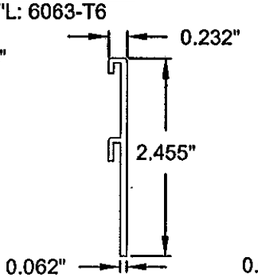

LOW FLAT SILL RISER
(20) MAT'L: 6063-T6

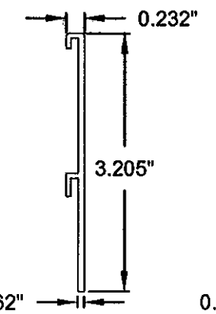

MED. FLAT SILL RISER
(22) MAT'L: 6063-T6

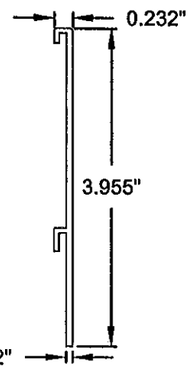

HIGH FLAT SILL RISER
(25) MAT'L: 6063-T6

PRODUCT REVISED
to complying with the Florida
Building Code
Acceptance No 11-1018.17
Expiration Date 4/7/15
By Ishaq I. Chanda
Miami Dade Product Control

Revsd By:	Date:	Revisions:	
J.J.	10/11/11	D	NO CHANGE THIS SHEET
SMC	03/15/10	C	PER MIAMI DADE COMMENTS
SMC	03/01/10	B	PER MIAMI DADE COMMENTS
Drawn By: SMC	Date: 08/05/09	Checked By: RJA	Date:

1070 TECHNOLOGY DRIVE
NOKOMIS, FL 34275
P.O. BOX 1529
NOKOMIS, FL 34274

PGT®

Description: EXTRUSIONS

Title: SERIES 670 ALUM. SGD - NON-IMPACT

Series/Model:	Scale:	Sheet:	Drawing No.	Rev:
SGD670	NTS	24 of 25	PGT0001	D

ANTHONY LYNN MILLER
LICENSE
No. 58705
STATE OF FLORIDA
PROFESSIONAL ENGINEER
10/11/11
A. LYNN MILLER, P.E.
P.E.# 58705

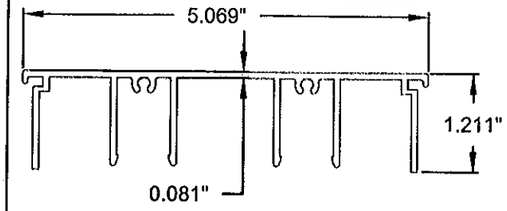

2-TRACK HEAD
(1) MAT'L: 6063-T6

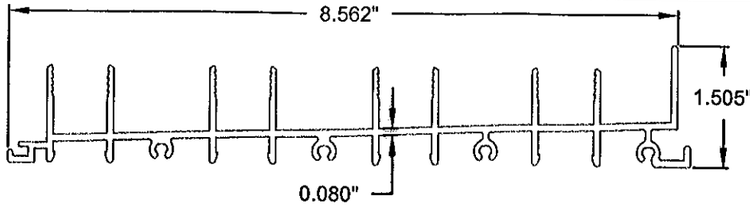

4-TRACK SILL
(10) MAT'L: 6063-T6

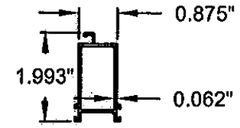

SCREEN BTM. RAIL
(46) MAT'L: 6063-T6

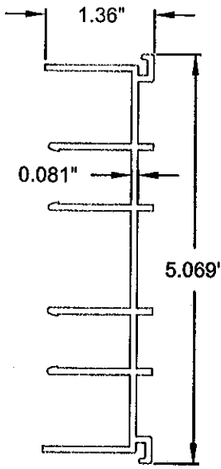

2-TRACK JAMB
(14) MAT'L: 6063-T6

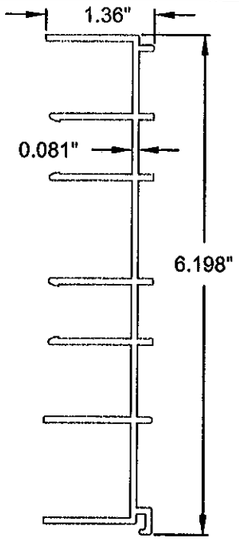

2-TRACK JAMB W/
SCREEN TRACK
(15) MAT'L: 6063-T6

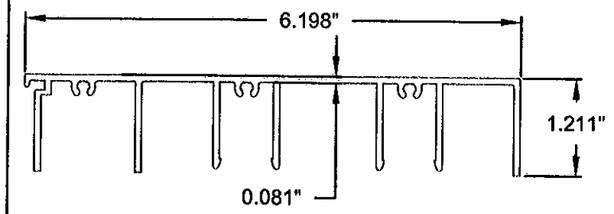

2-TRACK HEAD W/ SCREEN TRACK
(2) MAT'L: 6063-T6

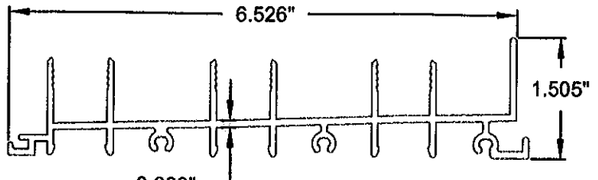

3-TRACK SILL
(9) MAT'L: 6063-T6

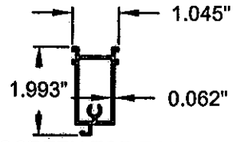

SCREEN TOP RAIL
(45) MAT'L: 6063-T6

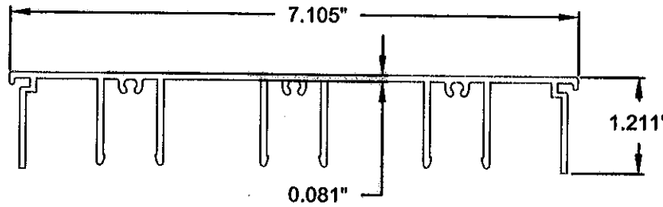

3-TRACK HEAD
(3) MAT'L: 6063-T6

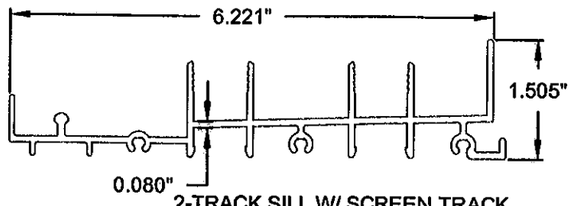

2-TRACK SILL W/ SCREEN TRACK
(8) MAT'L: 6063-T6

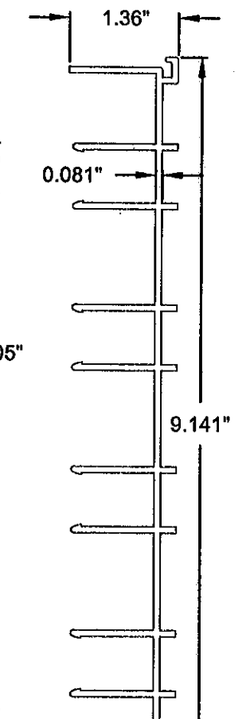

3-TRACK JAMB
(16) MAT'L: 6063-T6

4-TRACK JAMB
(17) MAT'L: 6063-T6

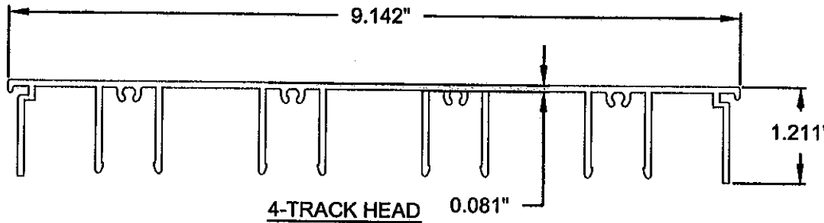

4-TRACK HEAD
(4) MAT'L: 6063-T6

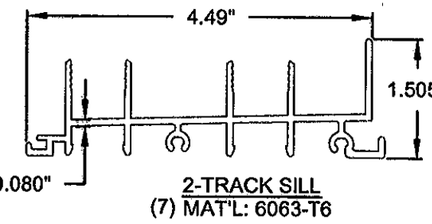

2-TRACK SILL
(7) MAT'L: 6063-T6

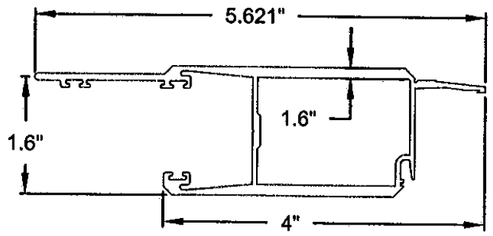

INSIDE CORNER ASTRAGAL
(120) MAT'L: 6063-T6

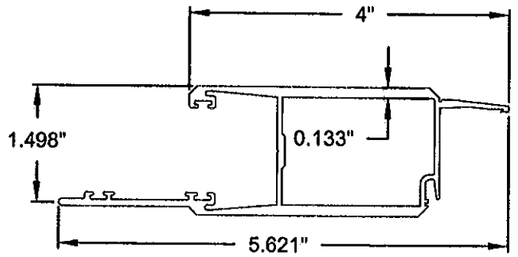

OUTSIDE CORNER ASTRAGAL
(119) MAT'L: 6063-T6

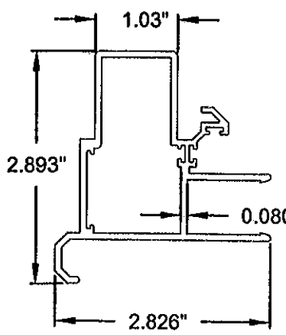

CORNER RECEIVER
(118) MAT'L: 6063-T6

PRODUCT REVISED
to complying with the Florida
Building Code
Acceptance No 11-1018.17
Expiration Date 04/07/2015
By Ishaq I. Chanda
Miami Dade Product Control

Revsd By:	Date:	Revisions:	
J.J.	10/11/11	D	NO CHANGE THIS SHEET
SMC	03/15/10	C	PER MIAMI DADE COMMENTS
SMC	03/01/10	B	PER MIAMI DADE COMMENTS
Drawn By: SMC	Date: 08/04/09	Checked By: RJA	Date:

1070 TECHNOLOGY DRIVE
NOKOMIS, FL 34275
P.O. BOX 1529
NOKOMIS, FL 34274

PGT®

Description: EXTRUSIONS
Title: SERIES 670 ALUM. SGD - NON-IMPACT

Series/Model:	Scale:	Sheet:	Drawing No.	Rev:
SGD670	NTS	25 of 25	PGT0001	D

ANTHONY LYNN MILLER
LICENSE
No. 58705
STATE OF FLORIDA
PROFESSIONAL ENGINEER
10/11/11
A. LYNN MILLER, P.E.
P.E.# 58705