MIAMI-DADE COUNTY
DEPARTMENT OF PERMITTING, ENVIRONMENT, AND REGULATORY AFFAIRS (PERA)
BOARD AND CODE ADMINISTRATION DIVISION

MIAMI–DADE COUNTY, Florida
PRODUCT CONTROL SECTION
11805 SW 26 Street, Room 208
Miami, Florida 33175–2474
T (786) 315–2590 F (786) 315–2599
www.miamidade.gov/pera/

NOTICE OF ACCEPTANCE (NOA)

Kolbe & Kolbe Millwork Co., Inc.
1323 South 11th Ave.
Wausau, WI 54401

SCOPE:

This NOA is being issued under the applicable rules and regulations governing the use of construction materials. The documentation submitted has been reviewed and accepted by Miami–Dade County PERA–Product Control Section to be used in Miami–Dade County and other areas where allowed by the Authority Having Jurisdiction (AHJ).

This NOA shall not be valid after the expiration date stated below. The Miami–Dade County Product Control Section (In Miami–Dade County) and/or the AHJ (in areas other than Miami–Dade County) reserve the right to have this product or material tested for quality assurance purposes. If this product or material fails to perform in the accepted manner, the manufacturer will incur the expense of such testing and the AHJ may immediately revoke, modify, or suspend the use of such product or material within their jurisdiction. PERA reserves the right to revoke this acceptance, if it is determined by Miami–Dade County Product Control Section that this product or material fails to meet the requirements of the applicable building code.

This product is approved as described herein, and has been designed to comply with the Florida Building Code, including the High Velocity Hurricane Zone.

DESCRIPTION: Series "Ultra Manor" Outswing Glazed Aluminum Clad Wood Door – L.M.I.

APPROVAL DOCUMENT: Drawing No. **1060**, titled "Wood Manor Series Impact Door", sheets 1 through 9 of 9, dated 04/10/2002, latest revision "**B1**", dated 10/12/2011, prepared by W. W. Schaefer Engineering & Consulting, P.A., signed and sealed by Warren Schaefer, P. E., bearing the Miami–Dade County Product Control Revision stamp with the Notice of Acceptance number and Expiration date by the Miami–Dade County Product Control Section.

MISSILE IMPACT RATING: Large and Small Missile Impact Resistant.

LABELING: Each unit shall bear a permanent label with the manufacturer's name or logo, city, state, model/series and following statement: "Miami–Dade County Product Control Approved" unless otherwise noted herein.

RENEWAL of this NOA shall be considered after a renewal application has been filed and there has been no change in the applicable building code negatively affecting the performance of this product.

TERMINATION of this NOA will occur after the expiration date or if there has been a revision or change in the materials, use, and/or manufacture of the product or process. Misuse of this NOA as an endorsement of any product, for sales, advertising or any other purposes shall automatically terminate this NOA. Failure to comply with any section of this NOA shall be cause for termination and removal of NOA.

ADVERTISEMENT: The NOA number preceded by the words Miami–Dade County, Florida, and followed by the expiration date may be displayed in advertising literature. If any portion of the NOA is displayed, then it shall be done in its entirety.

INSPECTION: A copy of this entire NOA shall be provided to the user by the manufacturer or its distributors and shall be available for inspection at the job site at the request of the Building Official.

This NOA **revises NOA No. 07–0618.15** and consists of this page 1, evidence pages E–1 and E–2, as well as approval document mentioned above.

The submitted documentation was reviewed by **Jaime D. Gascon, P. E.**

MIAMI-DADE COUNTY APPROVED

J. Gascon
1/4/12

NOTICE OF ACCEPTANCE: EVIDENCE SUBMITTED

A. DRAWINGS

1. Manufacturer's die drawings and sections.
   (Submitted under previous NOA No.02–0617.03)
2. Drawing No. **1060**, titled "Wood Manor Series Impact Door", sheets 1 through 9 of 9, dated 04/10/2002, latest revision "**B1**", dated 10/12/2011, prepared by W. W. Schaefer Engineering & Consulting, P.A., signed and sealed by Warren W. Schaefer, P. E.

B. TESTS

1. Test reports on: 1) Air Infiltration Test, per FBC, TAS 202–94
   2) Uniform Static Air Pressure Test, Loading per FBC TAS 202–94
   3) Water Resistance Test, per FBC, TAS 202–94
   4) Large Missile Impact Test per SFBC, PA 201–94
   5) Cyclic Wind Pressure Loading per SFBC, PA 203–94
   6) Forced Entry Test, per FBC 2411 3.2.1, TAS 202–94

   along with marked–up drawings and installation diagram of 19 specimens of aluminum clad and non–clad wood doors and fixed/ transom, prepared by Architectural Testing, Inc., Test Report No. **ATI 06–30303.01**, dated 12/08/2001, signed and sealed by Steven Ulrich, P. E.
   (Submitted under previous NOA No.02–0617.03)

C. CALCULATIONS

1. Anchor verification calculations and structural analysis, complying with FBC, prepared by W. W. Schaefer Engineering & Consulting, P.A., dated 08/28/2007, signed and sealed by Warren W. Schaefer, P. E.
2. **Complies with ASTM E1300–98/ 04**
   (Submitted under previous NOA No.07–0618.15)

D. QUALITY ASSURANCE

1. Miami–Dade Department of Permitting, Environment, and Regulatory Affairs (PERA).

E. MATERIAL CERTIFICATIONS

1. Notice of Acceptance No. **07–0831.06** issued to Cardinal LG for their "**Laminated Glass Cardinal Sea–Storm Type B**", dated 10/11/2007, expiring on 12/30/2012.

Jaime D. Gascon, P. E.
Product Control Section Supervisor
NOA No. 11–1020.05
Expiration Date: October 24, 2012
Approval Date: January 12, 2012

NOTICE OF ACCEPTANCE: EVIDENCE SUBMITTED

F. STATEMENTS

1. Statement letter of conformance and compliance with the FBC–2010 and ANSI/ AAMA/ NWWDA 101/ I.S.2–97, dated 10/12/2011, signed and sealed by Warren W. Schaefer, P. E.
2. Statement letter of no financial interest and independence, dated 10/12/2011, signed and sealed by Warren W. Schaefer, P. E.
3. Statement letter of no financial interest, conformance and compliance with the FBC–2007, dated 08/16/2007, signed and sealed by Warren W. Schaefer, P. E. ***(Submitted under previous NOA No.07–0618.15)***
4. Laboratory compliance letter for Test Report No. **ATI–06–30303.01**, issued by Architectural Testing, Inc., dated 12/08/01, signed and sealed by Steven Ulrich, P. E. ***(Submitted under previous NOA No. 02–0617.03)***

G. OTHERS

1. Notice of Acceptance No. **07–0618.15**, issued to Kolbe & Kolbe Millwork Co., Inc. for their Series "Ultra Manor Outswing Glazed Wood Door – L.M.I.", approved on 11/01/2007 and expiring on 10/24/2012.

Jaime D. Gascon, P. E.
Product Control Section Supervisor
NOA No. 11–1020.05
Expiration Date: October 24, 2012
Approval Date: January 12, 2012

GENERAL NOTES:

1. THESE DOOR SYSTEMS HAVE BEEN TESTED, ANALYZED & APPROVED FOR DESIGN PRESSURES NOT TO EXCEED THOSE SHOWN IN THE "ALLOWABLE DESIGN PRESSURE TABLE(S).
2. OPENINGS, BUCKING & BUCKING FASTENERS MUST BE PROPERLY DESIGNED & INSTALLED TO TRANSFER WIND LOADS TO THE STRUCTURE.
3. ALL HARDWARE & FASTENERS SHALL BE IN ACCORDANCE WITH THESE DRAWINGS & SHALL NOT VARY UNLESS SPECIFICALLY MENTIONED ON THE DRAWINGS. SPECIFIED ANCHOR EMBED TO BASE MATERIAL SHALL BE BEYOND WALL FINISH OR STUCCO.
4. THE DETAILS & SPECIFICATIONS SHOWN HEREIN REPRESENT THE PRODUCTS TESTED & PROPOSED FOR WATER, AIR, IMPACT, CYCLIC & UNIFORM STATIC AIR PRESSURE TESTING IN CONFORMANCE WITH THE FLORIDA BUILDING CODE PROTOCALS TAS-201, 202 & 203 FOR LARGE MISSILE IMPACT DOORS.
5. THESE DOOR SYSTEMS HAVE BEEN DESIGNED IN ACCORDANCE WITH AND MEET THE REQUIREMENTS OF THE FLORIDA BUILDING CODE (FBC) INCLUDING HIGH VELOCITY HURRICANE ZONES (HVHZ).
6. IMPACT SHUTTERS ARE NOT REQUIRED WITH THESE DOORS.
7. ALL ANCHORS SECURING DOOR FRAME TO PRESSURE TREATED BUCKS OR WOOD FRAMING SHALL BE CAPABLE OF RESISTING CORROSION CAUSED BY THE PRESSURE TREATING CHEMICALS IN THE WOOD.
8. DETERMINE THE POSITIVE & NEGATIVE DESIGN LOADS TO USE WHEN REFERENCING THESE DOCUMENTS IN ACCORDANCE WITH THE GOVERNING CODE AND GOVERNING WIND VELOCITY. FOR WIND LOAD CALCULATIONS IN ACCORDANCE WITH THE FLORIDA BUILDING CODE, A DIRECTIONALITY FACTOR OF Kd = 0.85 MAY BE APPLIED PER THE ASCE-7 STANDARD.
9. NO INCREASE IN ALLOWABLE STRESS HAS BEEN USED IN THE CERTIFICATION OF THIS PRODUCT. WIND LOAD DURATION FACTOR Cd = 1.6 WAS USED FOR WOOD SCREW ANALYSIS ONLY.
10. MATERIALS, INCLUDING BUT NOT LIMITED TO STEEL SCREWS, THAT COME INTO CONTACT WITH OTHER DISSIMILAR MATERIALS SHALL MEET THE REQUIREMENTS OF FLORIDA BUILDING CODE CHAPTER 20.
11. ALL WOOD MEMBERS OF DOORS THAT MAY POSSIBLY COME INTO CONTACT WITH MASONRY OR CONCRETE SUBSTRATES, ARE SUBJECT TO MOISTURE &/OR ARE SUBJECT TO THE OUTSIDE ENVIRONMENT SHALL BE OF AN APPROVED DURABLE SPECIES OR BE TREATED IN AN APPROVED METHOD WITH AN APPROVED PRESERVATIVE PER FBC SECTION 2326.

HINGE REQUIREMENTS	
DOOR HEIGHT	# HINGES REQ'D
ALL SIZES	4

ALLOWABLE DESIGN LOAD		
FRAME HEIGHT	POSITIVE	NEGATIVE
82.6" OR LESS	70 PSF	70 PSF
TALLER THAN 82.6"	65 PSF	65 PSF

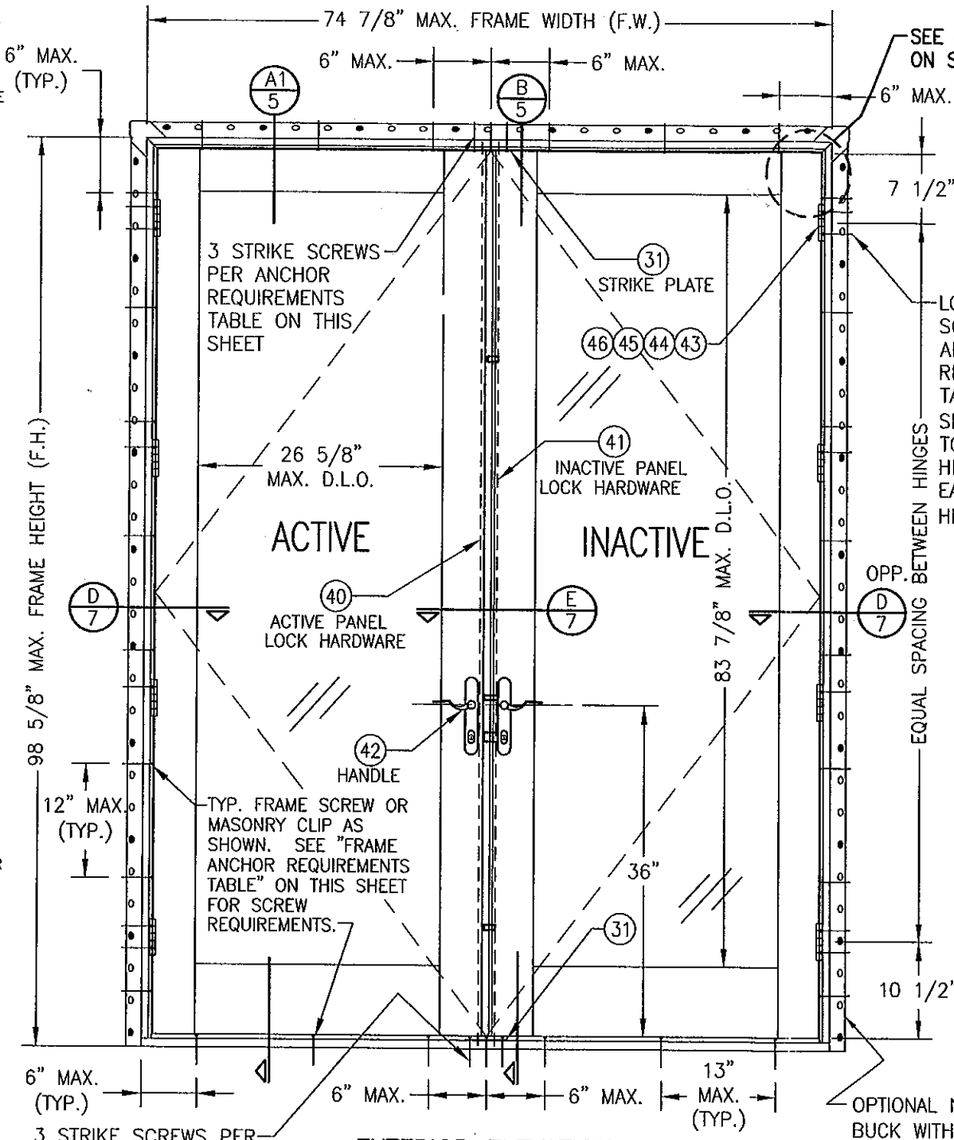

EXTERIOR ELEVATION
DOUBLE OUTSWING DOOR
SCALE: 3/4"=1'-0"

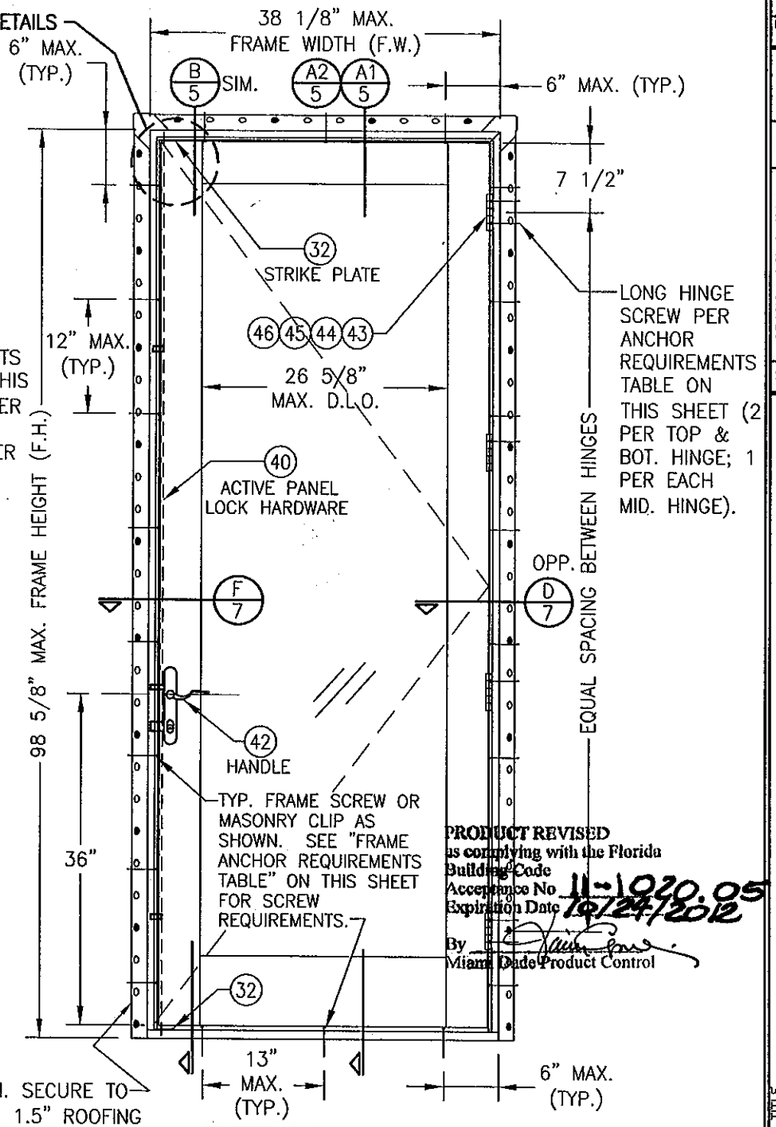

PRODUCT REVISED
as complying with the Florida Building Code
Acceptance No 11-1020.05
Expiration Date 10/24/2012
By
Miami-Dade Product Control

EXTERIOR ELEVATION
SINGLE OUTSWING DOOR
SCALE: 3/4"=1'-0"

FRAME ANCHOR REQUIREMENTS TABLE

FRAME/SILL SCREWS

OPENING TYPE (SUBSTRATE)	FRAME/CLIP/NAIL FIN TO OPENING FASTENER TYPE	MINIMUM EMBED	MINIMUM EDGE DIST.
2X_ WOOD FRAME OR BUCK (MIN. GR. 3 & G=0.55)	NO. 10 SMS OR WOOD SCREW	1 1/4"	3/4"
(2) MIN. C-90 CMU	(1) 1/4" CONCRETE SCREW	1 1/4"	2"
MIN. 2500 PSI CONCRETE	(1) 1/4" CONCRETE SCREW	1 1/2"	2"

FRAME ANCHOR REQUIREMENTS TABLE

HINGE & STRIKE SCREWS

OPENING TYPE (SUBSTRATE)	FRAME/CLIP/NAIL FIN TO OPENING FASTENER TYPE	MINIMUM EMBED	MINIMUM EDGE DIST.
2X_ WOOD FRAME OR BUCK (MIN. GR. 3 & G=0.55)	NO. 10 SMS OR WOOD SCREW	1 1/4"	3/4"
C-90 CMU/2500 PSI CONCRETE	(1) 3/16" CONCRETE SCREW	1 1/4"	2"

(1) CONCRETE SCREWS SHALL BE ELCO ULTRACONS, ELCO CRETE-FLEX, ITW RAMSET/RED HEAD TAPCONS OR HILTI KWIK-CON II (HARDENED STEEL OR S.S.).
(2) CMU IS APPLICABLE AT SIDES ONLY.

WARREN W. SCHAEFER LICENSE No. 44135 STATE OF FLORIDA PROFESSIONAL ENGINEER

THESE DRAWINGS ARE APPLICABLE ONLY TO THE PRODUCT SPECIFIED. THEY MAY NOT BE USED FOR THE ASSEMBLY AND/OR INSTALLATION OF ANY OTHER PRODUCT NOR MAY THEY BE USED FOR RATIONAL AND/OR LOCAL APPROVAL OF ANY PRODUCT NOT PRODUCED BY THE MANUFACTURER STATED ON THESE DRAWINGS.

DRAWN BY: W.W.S.	CHECKED BY: W.W.S.
PLOT: 1=16	DATE: 04/10/02

NO.	REVISION DESCRIPTION	BY	DATE
A1	UPDATE TO 2004 FBC	W.R.M.	08/28/07
B1	UPDATE TO CURENT STANDARDS	W.R.M.	10/12/11

DRAWING TITLE: ULTRA SERIES MANOR IMPACT DOOR

MANUFACTURER: KOLBE & KOLBE MILLWORK CO., INC.
1323 SOUTH 11TH AVE.
WAUSAU, WI 54401
715-842-5666

CONSULTANTS
W. W. SCHAEFER ENGINEERING & CONSULTING, P.A. (CA 6809)
7480 150TH COURT NORTH
PALM BEACH GARDENS, FL 33418
PHONE: 561-744-3424

CERTIFICATION
OCT 12 2011
WARREN W. SCHAEFER, P.E.
P.E. NO. 44135

DRAWING NO. 1060 REV. B
SHEET NO. 1 OF 9

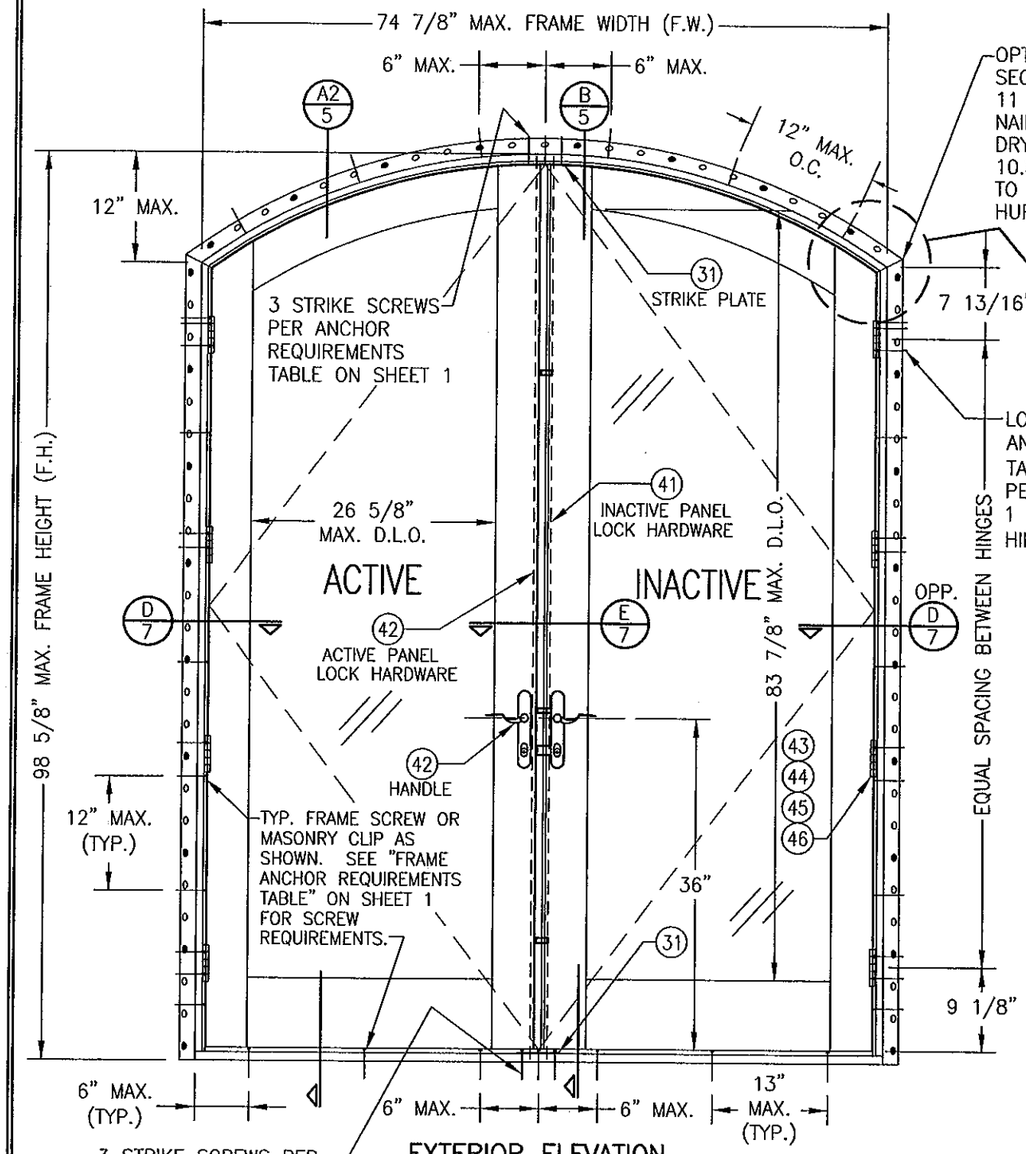

EXTERIOR ELEVATION
DOUBLE OUTSWING DOOR
EYEBROW TOP
SCALE: 3/4"=1'-0"

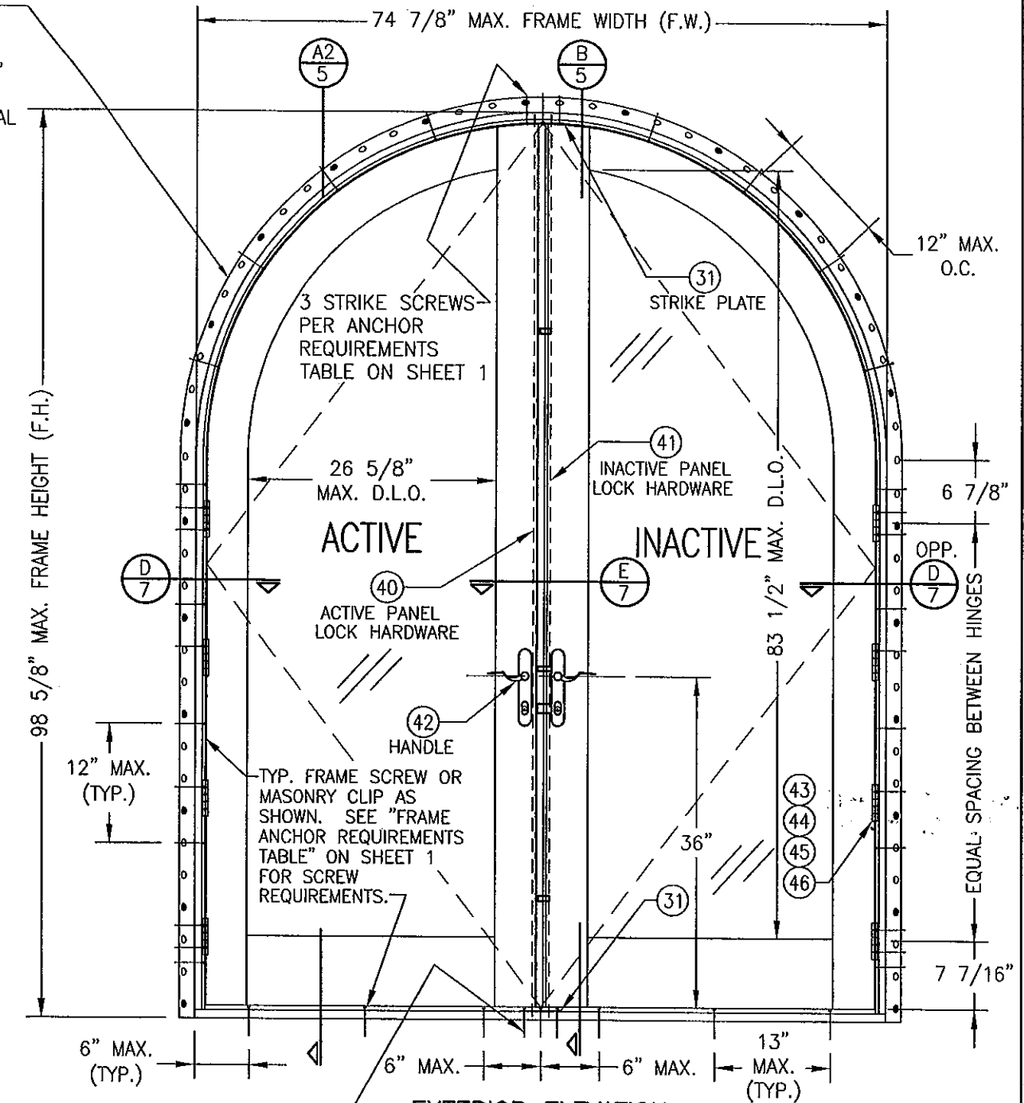

EXTERIOR ELEVATION
DOUBLE OUTSWING DOOR
HALF ROUND TOP
SCALE: 3/4"=1'-0"

FOR ALLOWABLE DESIGN LOADS AND HINGE REQUIREMENTS, SEE SHEET 1.

PRODUCT REVISED
as complying with the Florida Building Code
Acceptance No 11-1020.05
Expiration Date 10/24/2012
By
Miami Dade Product Control

WARREN W. SCHAEFER ★ ENGINEER ★ LICENSE No. 44135 ★ STATE OF FLORIDA ★ PROFESSIONAL ENGINEER

NO.	REVISION DESCRIPTION	BY	DATE

DRAWN BY: W.W.S. | CHECKED BY: W.W.S.
PLOT: 1=16 | DATE: 04/10/02

DRAWING TITLE: ULTRA SERIES MANOR IMPACT DOOR

MANUFACTURER: KOLBE & KOLBE MILLWORK CO., INC.
1323 SOUTH 11TH AVE.
WAUSAU, WI 54401
715-842-5666

CONSULTANTS: W. W. SCHAEFER ENGINEERING & CONSULTING, P.A. (CA 6809)
7480 150TH COURT NORTH
PALM BEACH GARDENS, FL 33418
PHONE: 561-744-3424

CERTIFICATION: OCT 12 2011
WARREN W. SCHAEFER, P.E.
P.E. NO. 44135

DRAWING NO. 1060 | REV. B
SHEET NO. 2 OF 9

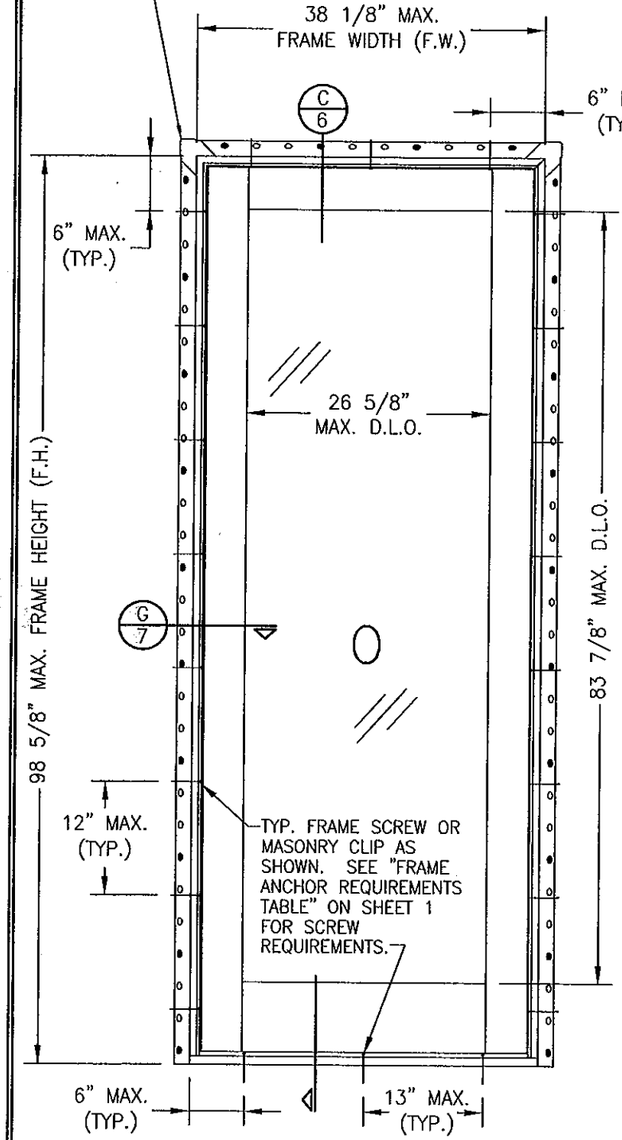

EXTERIOR ELEVATION
SINGLE FIXED PANEL
SCALE: 3/4"=1'-0"

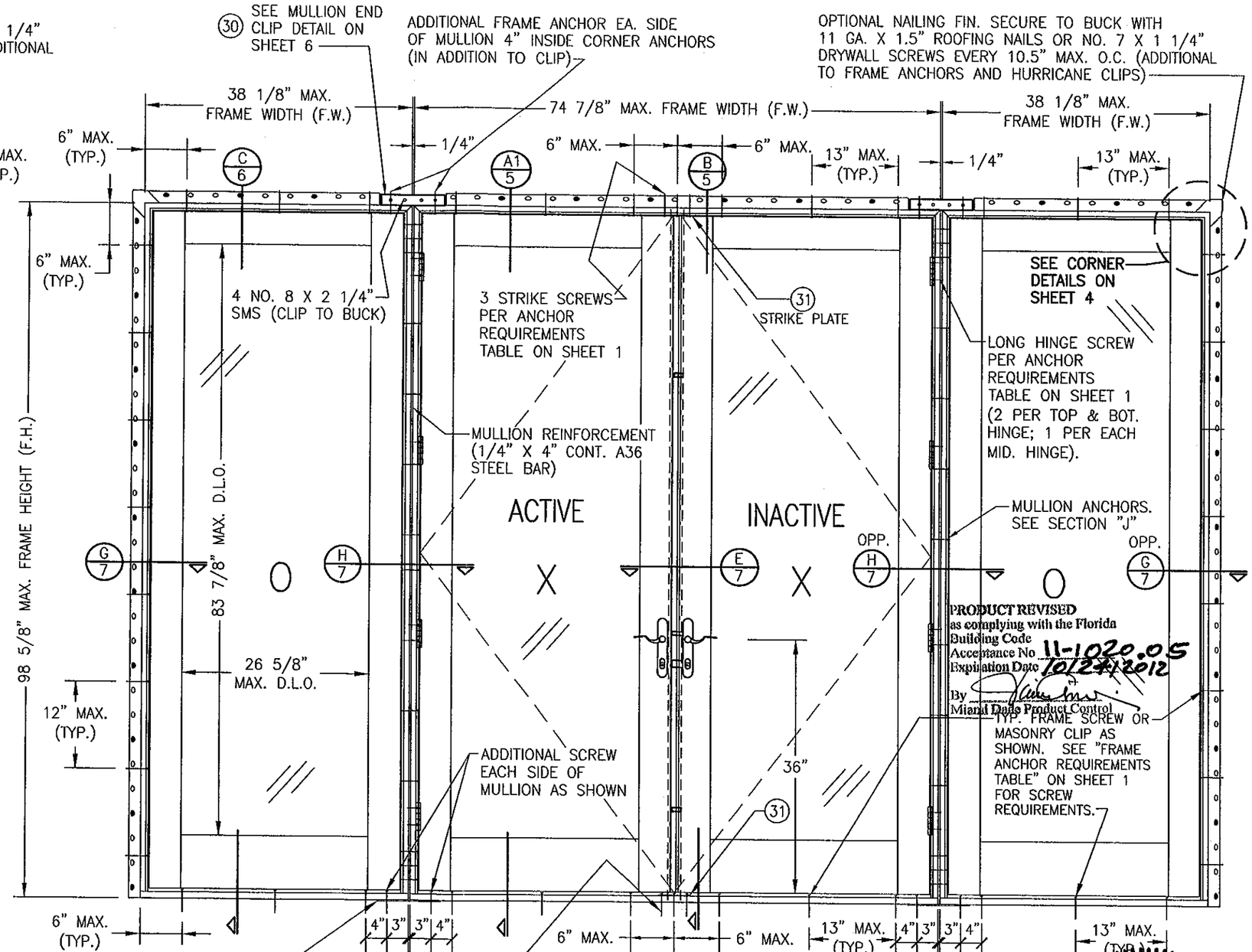

EXTERIOR ELEVATION
MULLED DOOR UNITS
SCALE: 3/4"=1'-0"

THE FOLLOWING ARE APPROVED COMBINATIONS:
XX, OX, OO, OXO, XOX, OOO, OXX, XXX, OXXO, XXOO, XOOX, OOOO, XXXX

PRODUCT REVISED
as complying with the Florida Building Code
Acceptance No 11-1020.05
Expiration Date 10/24/2012
By
Miami Dade Product Control

FOR ALLOWABLE DESIGN LOADS AND HINGE REQUIREMENTS, SEE SHEET 1.

NOTE: DOUBLE DOORS, SINGLE DOORS & FIXED PANELS MUST BE IN THEIR OWN SEPERATE FRAMES.

SEE OTHER ELEVATIONS FOR ANY DETAIL NOT SHOWN

WARREN W. SCHAEFER LICENSE No. 44135 STATE OF FLORIDA PROFESSIONAL ENGINEER

DRAWN BY: W.W.S.	CHECKED BY: W.W.S.
PLOT: 1=16	DATE: 04/10/02

NO.	REVISION DESCRIPTION	BY	DATE

DRAWING TITLE
ULTRA SERIES MANOR IMPACT DOOR

MANUFACTURER
KOLBE & KOLBE MILLWORK CO., INC.
1323 SOUTH 11TH AVE.
WAUSAU, WI 54401
715-842-5666

CONSULTANTS
W. W. SCHAEFER ENGINEERING & CONSULTING, P.A. (CA 6809)
7480 150TH COURT NORTH
PALM BEACH GARDENS, FL 33418
PHONE: 561-744-3424

CERTIFICATION
OCT 12 2011
WARREN W. SCHAEFER P.E.
P.E. NO. 44135

DRAWING NO. 1060 REV. B
SHEET NO. 3 OF 9

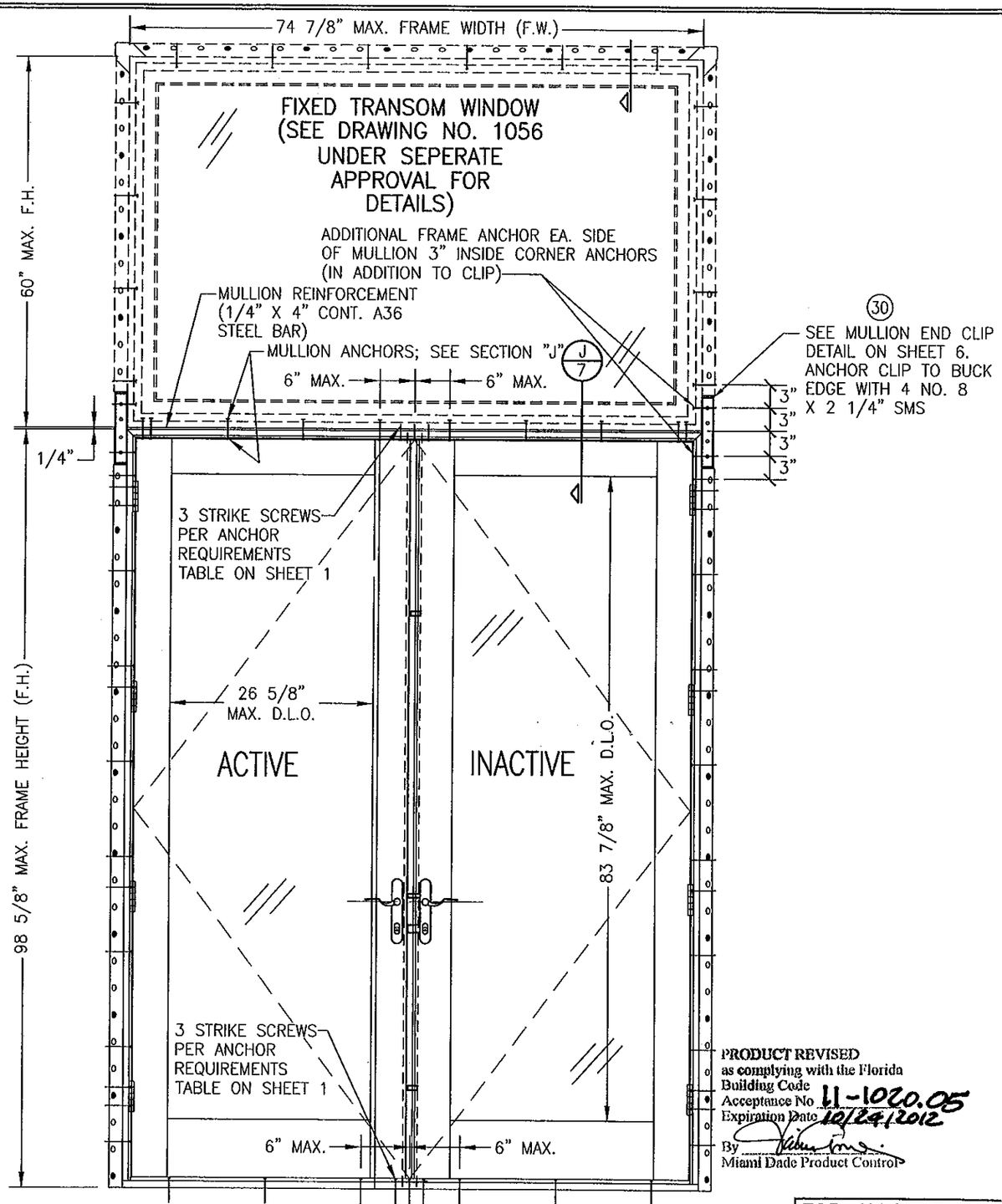

EXTERIOR ELEVATION
DOUBLE OUTSWING DOOR WITH TRANSOM
SCALE: 3/4"=1'-0"

SEE ELEVATION ON SHEET 1 FOR ALL DOOR INFORMATION & REQUIREMENTS

PRODUCT REVISED
as complying with the Florida Building Code
Acceptance No 11-1020.05
Expiration Date 10/24/2012
By
Miami Dade Product Control

FOR ALLOWABLE DESIGN LOADS AND HINGE REQUIREMENTS, SEE SHEET 1.

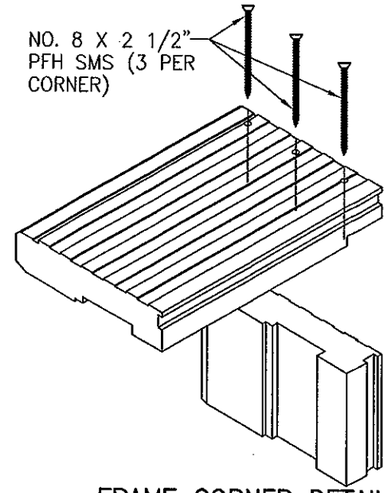

FRAME CORNER DETAIL
NOTE: FRAME MEETING SURFACES ARE SEALED WITH SILICONE.

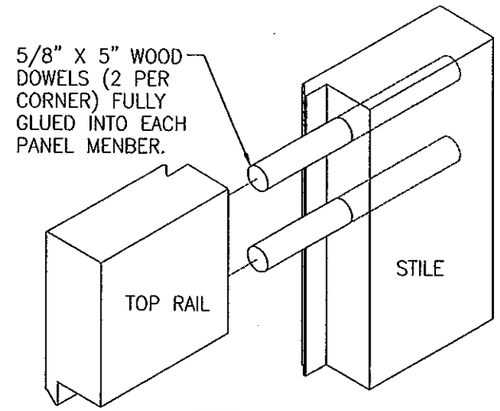

PANEL TOP CORNER DETAIL
NOTE: STILE & RAIL MEETING SURFACES ARE SEALED WITH SILICONE. CLAD JOINT IS ALSO SEALED WITH SILICONE.

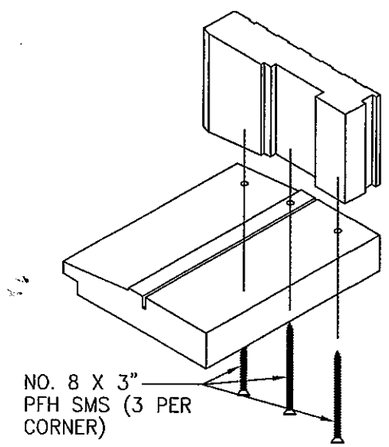

SILL CORNER DETAIL
NOTE: FRAME MEETING SURFACES ARE SEALED WITH SILICONE.

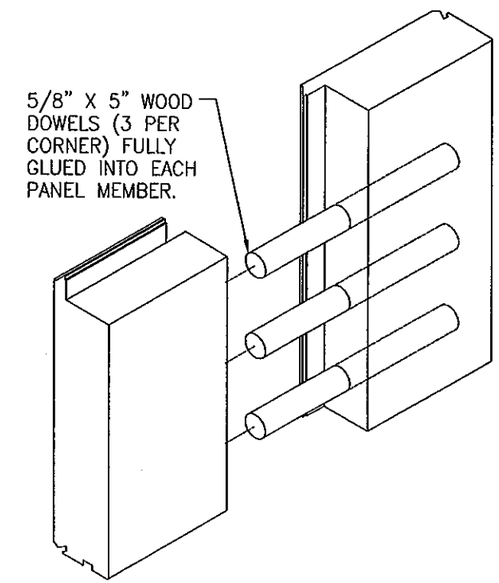

PANEL BOTTOM CORNER DETAIL
NOTE: STILE & RAIL MEETING SURFACES ARE SEALED WITH SILICONE. CLAD JOINT IS ALSO SEALED WITH SILICONE.

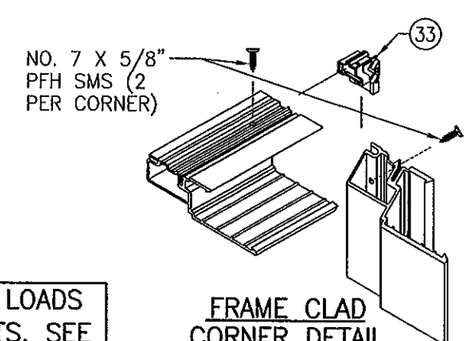

FRAME CLAD CORNER DETAIL
NOTE: CORNER OF CLAD IS SEALED WITH SILICONE

WARREN W. SCHAEFER LICENSE No. 44135 STATE OF FLORIDA PROFESSIONAL ENGINEER

NO.	REVISION DESCRIPTION	BY	DATE

DRAWN BY: W.W.S. | CHECKED BY: W.W.S.
PLOT: 1=16 | DATE: 04/10/02

DRAWING TITLE: ULTRA SERIES MANOR IMPACT DOOR

MANUFACTURER: KOLBE & KOLBE MILLWORK CO., INC.
1323 SOUTH 11TH AVE.
WAUSAU, WI 54401
715-842-5666

CONSULTANTS: W. W. SCHAEFER ENGINEERING & CONSULTING, P.A. (CA 6809)
7480 150TH COURT NORTH
PALM BEACH GARDENS, FL 33418
PHONE: 561-744-3424

CERTIFICATION: OCT 12 2011
WARREN W. SCHAEFER, P.E.
P.E. NO. 44135

DRAWING NO. 1060 | REV. B
SHEET NO. 4 OF 9

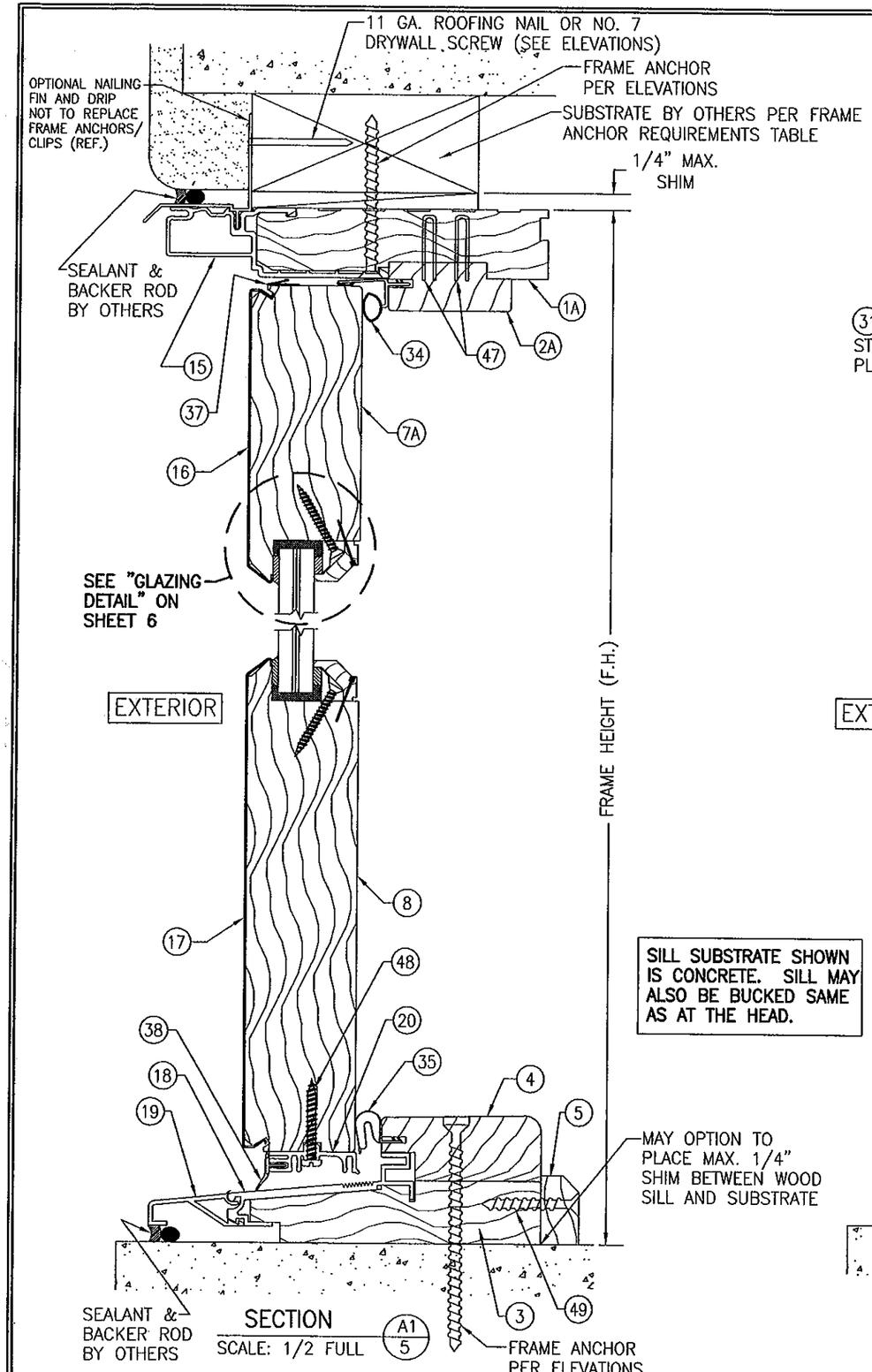

SILL SUBSTRATE SHOWN IS CONCRETE. SILL MAY ALSO BE BUCKED SAME AS AT THE HEAD.

SECTION A1/5
SCALE: 1/2 FULL

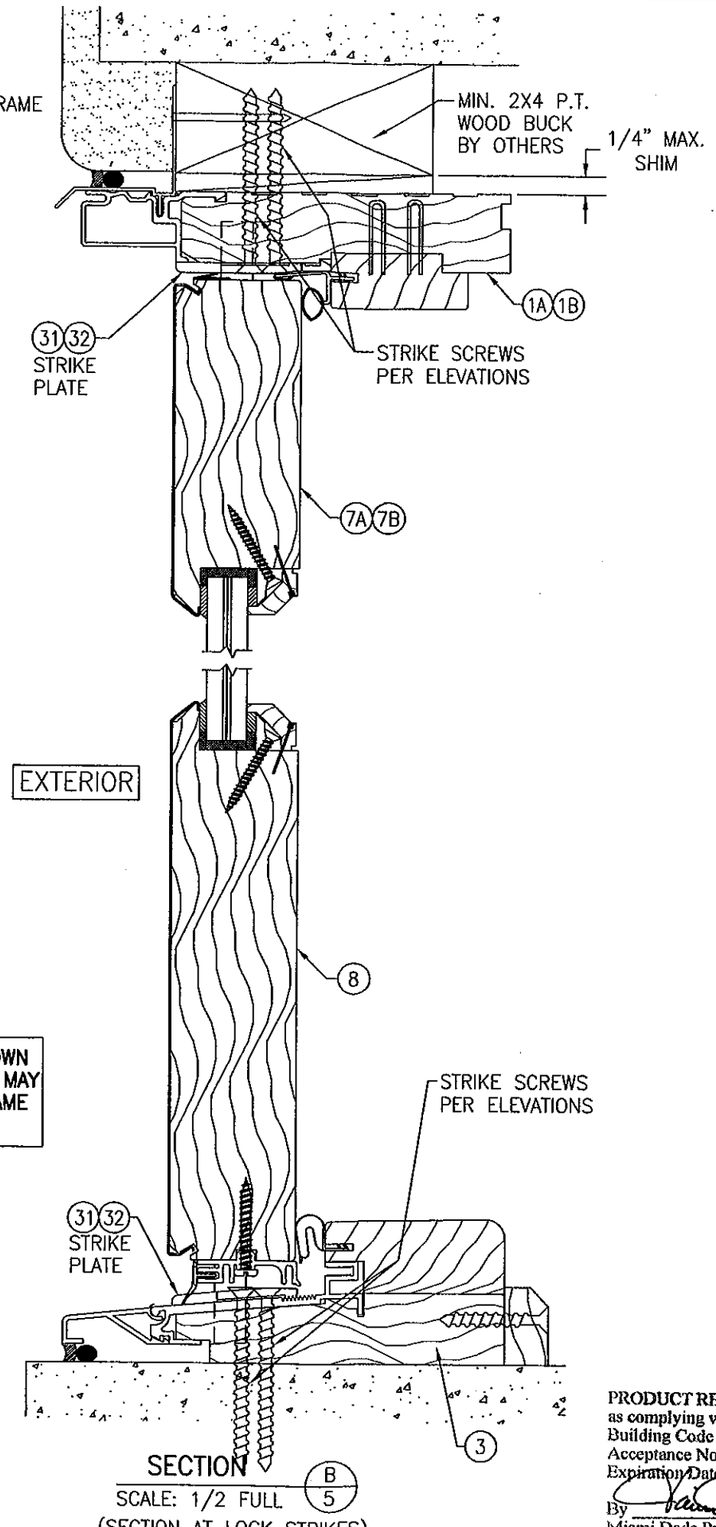

SECTION B/5
SCALE: 1/2 FULL
(SECTION AT LOCK STRIKES)

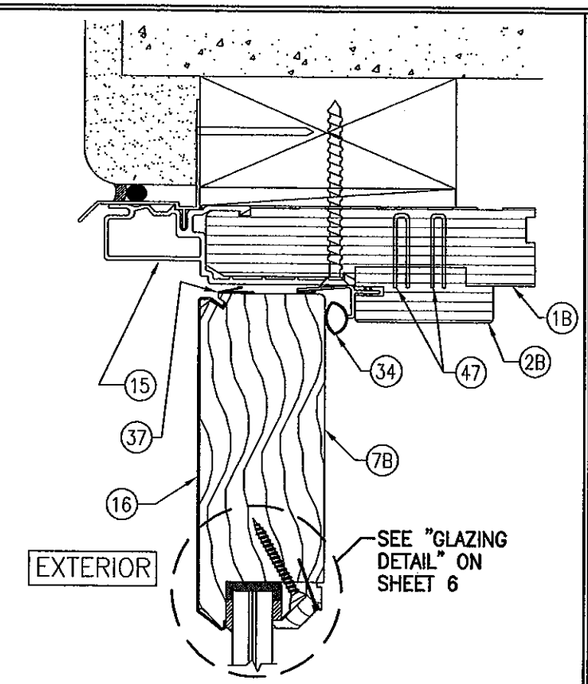

SECTION A2/5
SCALE: 1/2 FULL
(RADIAL HEAD)
SEE SECTION "A1" FOR DETAIL NOT SHOWN

SEE SHEET 6 FOR "OPTIONAL DIRECT MOUNT" & "OPTIONAL CLIP INSTALLATION DETAILS.

PRODUCT REVISED
as complying with the Florida Building Code
Acceptance No 11-1020.05
Expiration Date 10/24/2012
By
Miami Dade Product Control

WARREN W. SCHAEFER ★ ENGINEER ★ LICENSE No. 44135 ★ STATE OF FLORIDA ★ PROFESSIONAL ENGINEER

DRAWN BY: W.W.S.	CHECKED BY: W.W.S.
PLOT: 1=2	DATE: 04/10/02

NO.	REVISION DESCRIPTION	BY	DATE

DRAWING TITLE
ULTRA SERIES MANOR IMPACT DOOR

MANUFACTURER
KOLBE & KOLBE MILLWORK CO., INC.
1323 SOUTH 11TH AVE.
WAUSAU, WI 54401
715-842-5666

CONSULTANTS
W. W. SCHAEFER ENGINEERING & CONSULTING, P.A. (CA 6809)
7480 150TH COURT NORTH
PALM BEACH GARDENS, FL 33418
PHONE: 561-744-3424

CERTIFICATION
OCT 12 2011
WARREN W. SCHAEFER, P.E.
P.E. NO. 44135

DRAWING NO. 1060
REV. B
SHEET NO. 5 OF 9

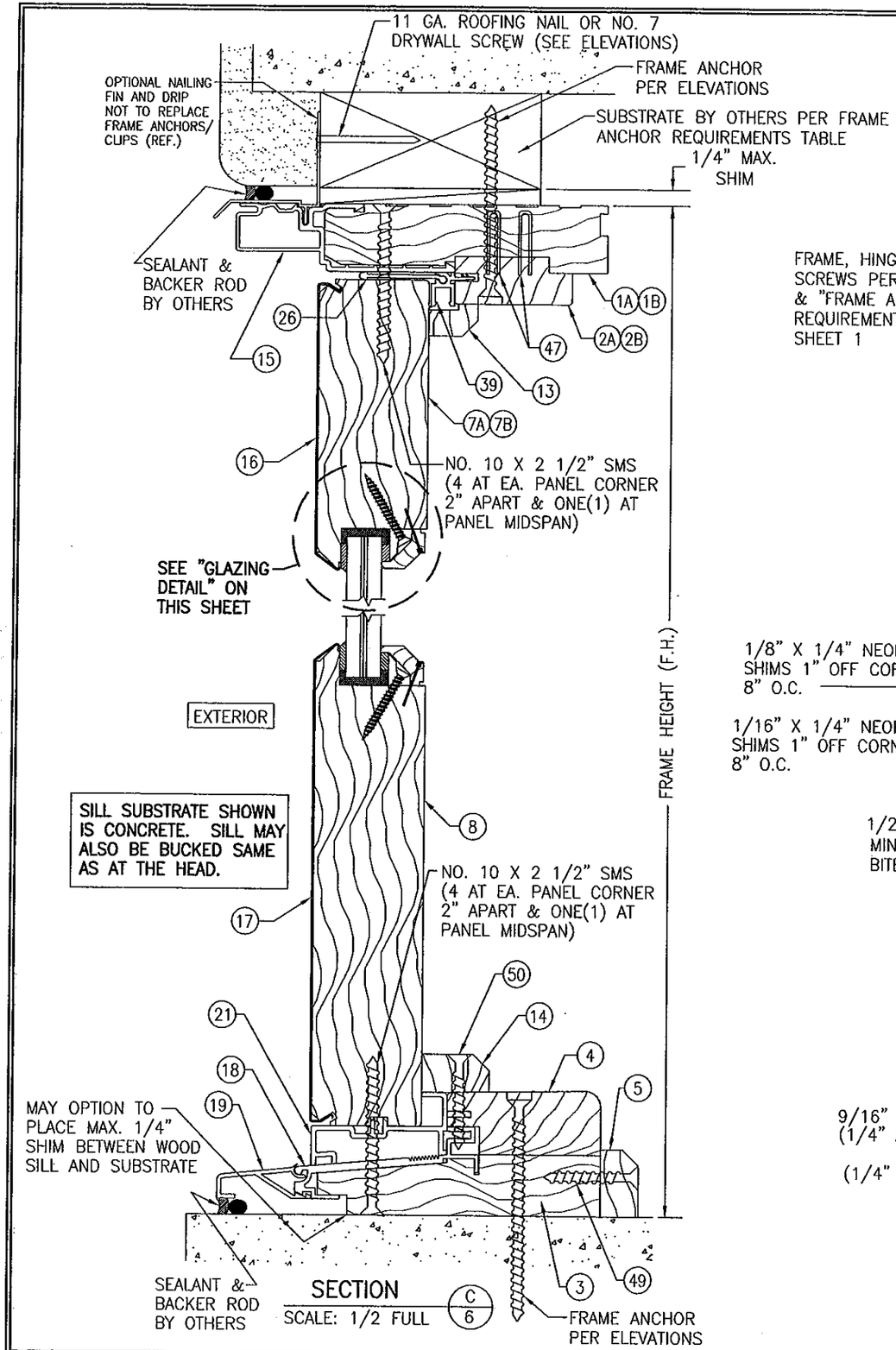

SECTION C/6

SCALE: 1/2 FULL

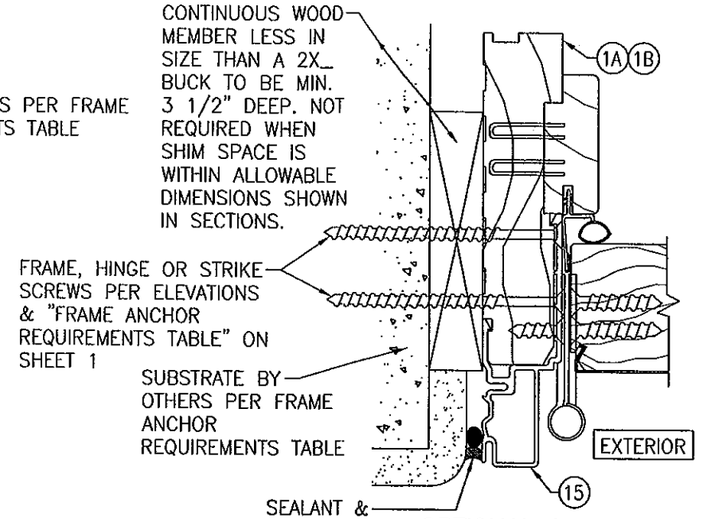

OPTIONAL DIRECT MOUNT DETAIL

FOR DETAIL NOT SHOWN, SEE OTHER SECTIONS.
HINGE JAMB SHOWN; OTHER JAMBS SIMILAR

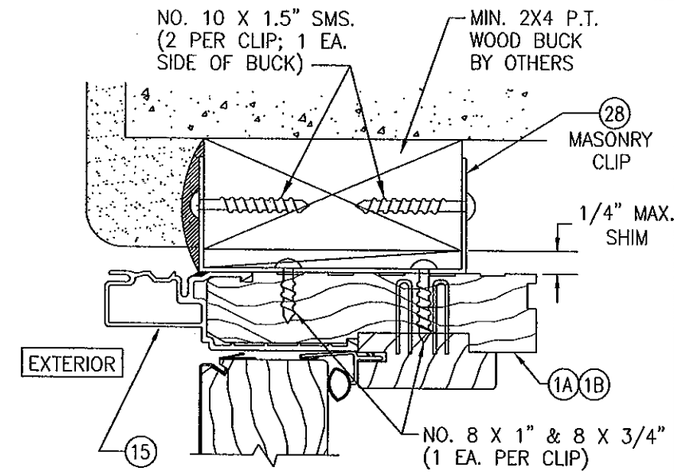

OPTIONAL CLIP INSTALLATION

HEAD JAMB DETAIL SHOWN; OTHER JAMBS & SILL SIMILAR
SEE SECTIONS FOR DETAIL NOT SHOWN

NOTE: CLIPS SHALL REPLACE ALL FRAME/JAMB FASTENERS EXCLUDING HINGE & STRIKE ANCHORS

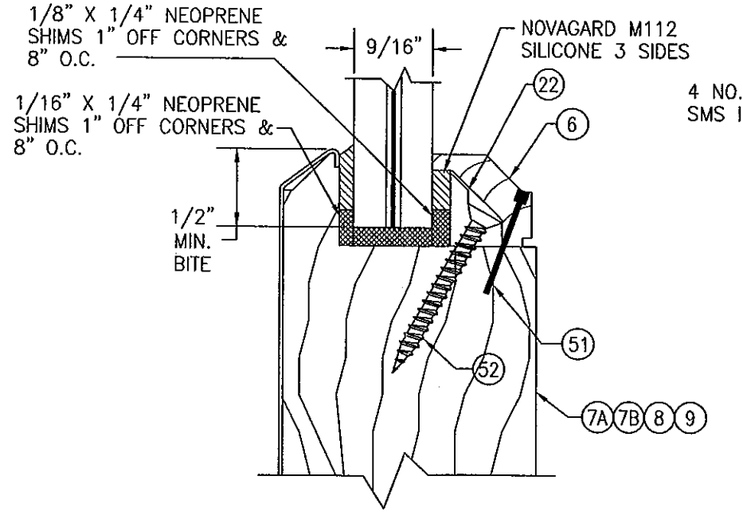

GLAZING DETAIL

9/16" CARDINAL SEASTORM TYPE "B" LAMINATED GLASS
(1/4" AN/0.015 PVB/0.007 PET/0.075 PVB/1/4" AN)
OR
(1/4" AN/0.045 PVB/0.007 PET/0.45 PVB/1/4" AN)

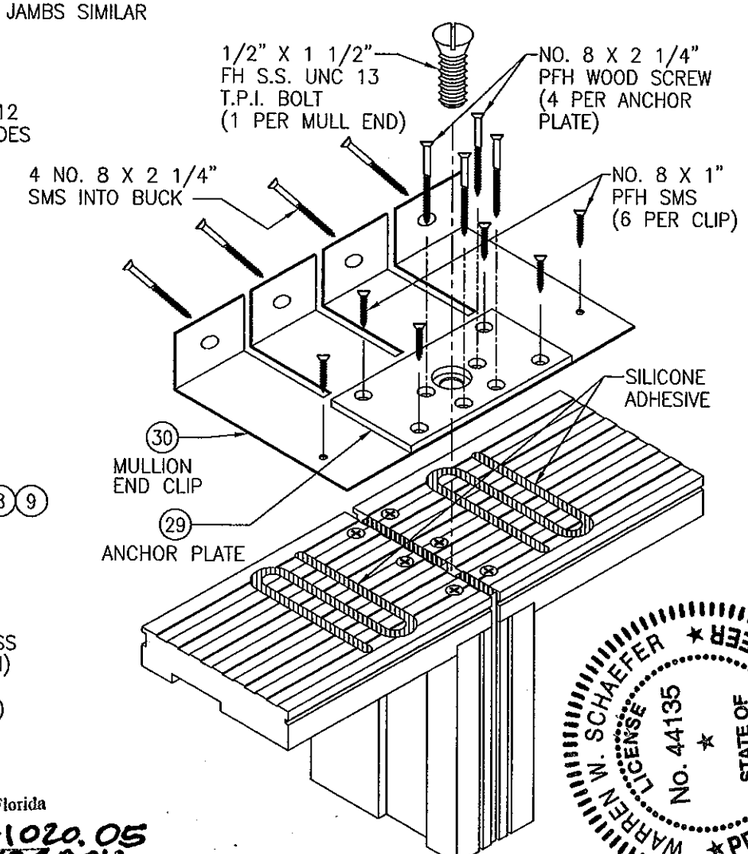

MULLION END CLIP INSTALLATION DETAIL

PRODUCT REVISED
as complying with the Florida
Building Code
Acceptance No 11-1020.05
Expiration Date 10/24/2012
By
Miami-Dade Product Control

WARREN W. SCHAEFER LICENSE No. 44135 STATE OF FLORIDA PROFESSIONAL ENGINEER

OCT 12 2011

NO.	REVISION DESCRIPTION	BY	DATE

DRAWN BY: W.W.S. | CHECKED BY: W.W.S.
PLOT: 1=2 | DATE: 04/10/02

DRAWING TITLE: ULTRA SERIES MANOR IMPACT DOOR

MANUFACTURER: KOLBE & KOLBE MILLWORK CO., INC.
1323 SOUTH 11TH AVE.
WAUSAU, WI 54401
715-842-5666

CONSULTANTS: W. W. SCHAEFER ENGINEERING & CONSULTING, P.A. (CA 6809)
7480 150TH COURT NORTH
PALM BEACH GARDENS, FL 33418
PHONE: 561-744-3424

WARREN W. SCHAEFER, P.E.
P.E. NO. 44135

DRAWING NO. 1060 | REV. B
SHEET NO. 6 OF 9

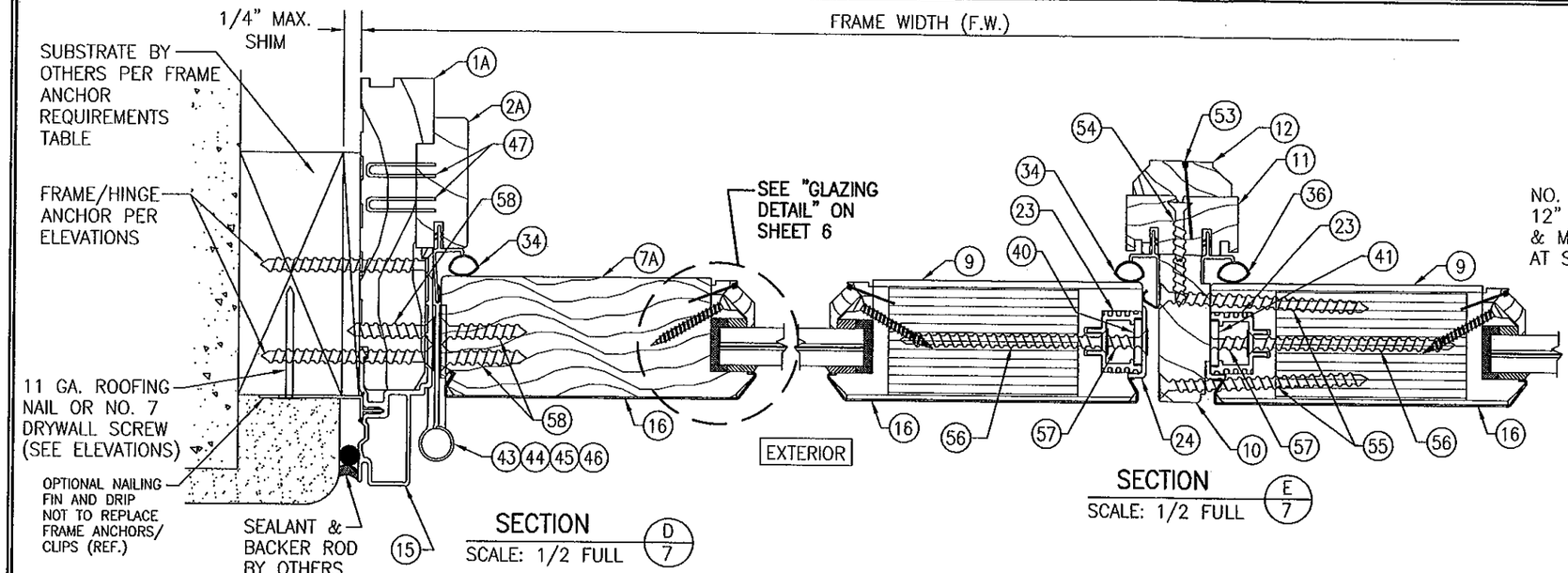

SECTION D/7
SCALE: 1/2 FULL

SECTION E/7
SCALE: 1/2 FULL

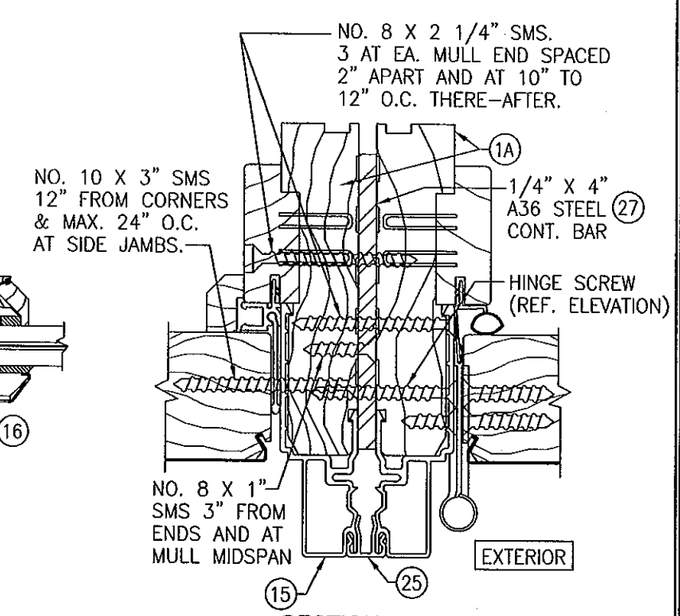

SECTION H/7
SCALE: 1/2 FULL

SEE SHEET 6 FOR "OPTIONAL DIRECT MOUNT" & "OPTIONAL CLIP INSTALLATION DETAILS.

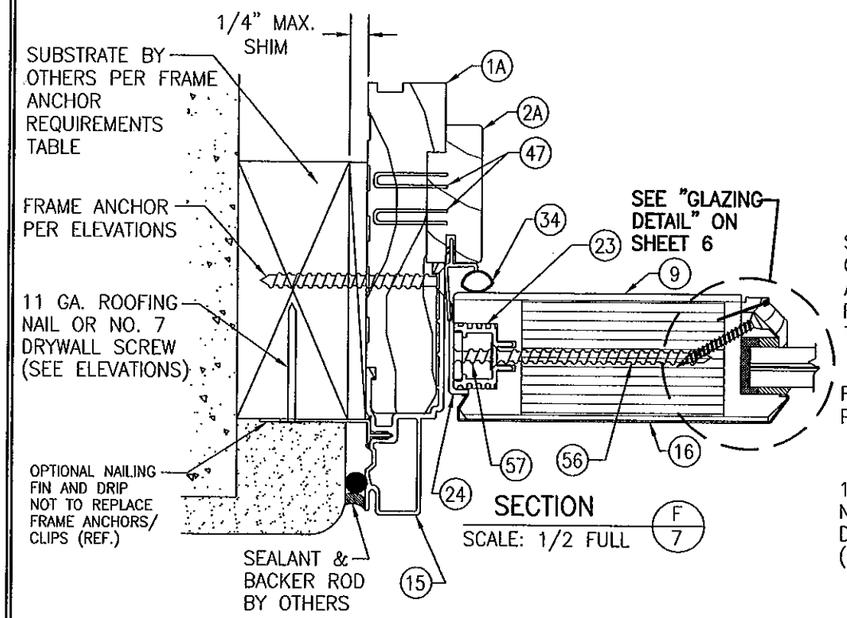

SECTION F/7
SCALE: 1/2 FULL

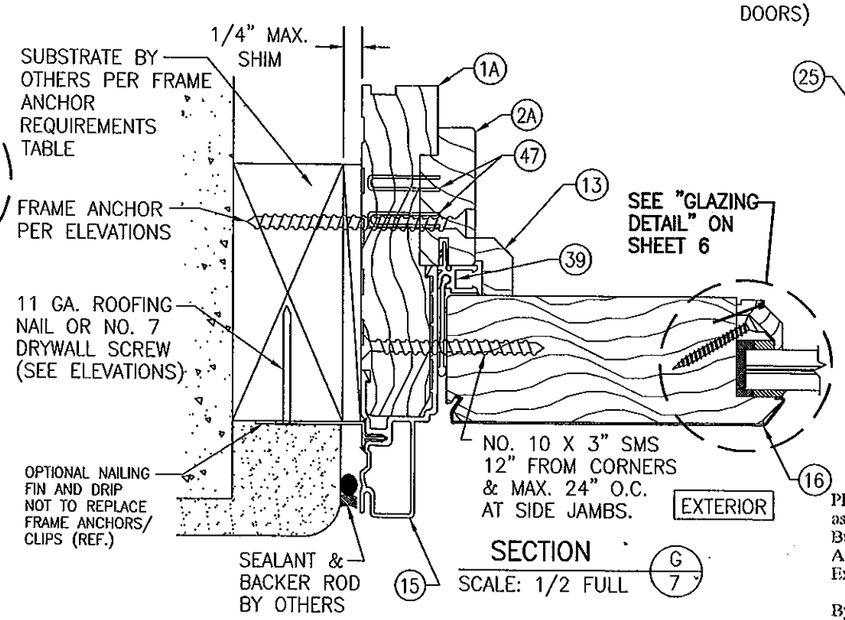

SECTION G/7
SCALE: 1/2 FULL

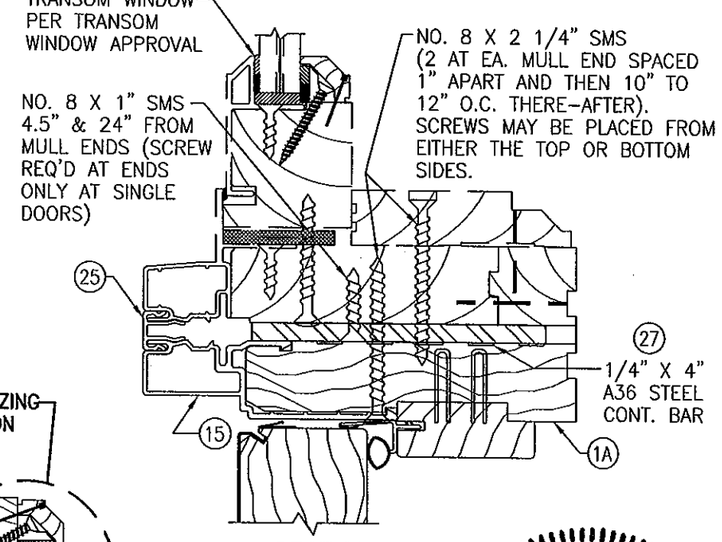

SECTION J/7
SCALE: 1/2 FULL

PRODUCT REVISED
as complying with the Florida Building Code
Acceptance No. 11-1020.05
Expiration Date 10/24/2012
By
Miami Dade Product Control

WARREN W. SCHAEFER ★ LICENSE No. 44135 ★ STATE OF FLORIDA ★ PROFESSIONAL ENGINEER

NO.	REVISION DESCRIPTION	BY	DATE

DRAWN BY: W.W.S. | CHECKED BY: W.W.S.
PLOT: 1=2 | DATE: 04/10/02

DRAWING TITLE: ULTRA SERIES MANOR IMPACT DOOR

MANUFACTURER: KOLBE & KOLBE MILLWORK CO., INC.
1323 SOUTH 11TH AVE.
WAUSAU, WI 54401
715-842-5666

CONSULTANTS: W. W. SCHAEFER ENGINEERING & CONSULTING, P.A. (CA 6809)
7480 150TH COURT NORTH
PALM BEACH GARDENS, FL 33418
PHONE: 561-744-3424

CERTIFICATION
OCT 12 2011
WARREN W. SCHAEFER, P.E.
P.E. NO. 44135

DRAWING NO. 1060 | REV. B
SHEET NO. 7 OF 9

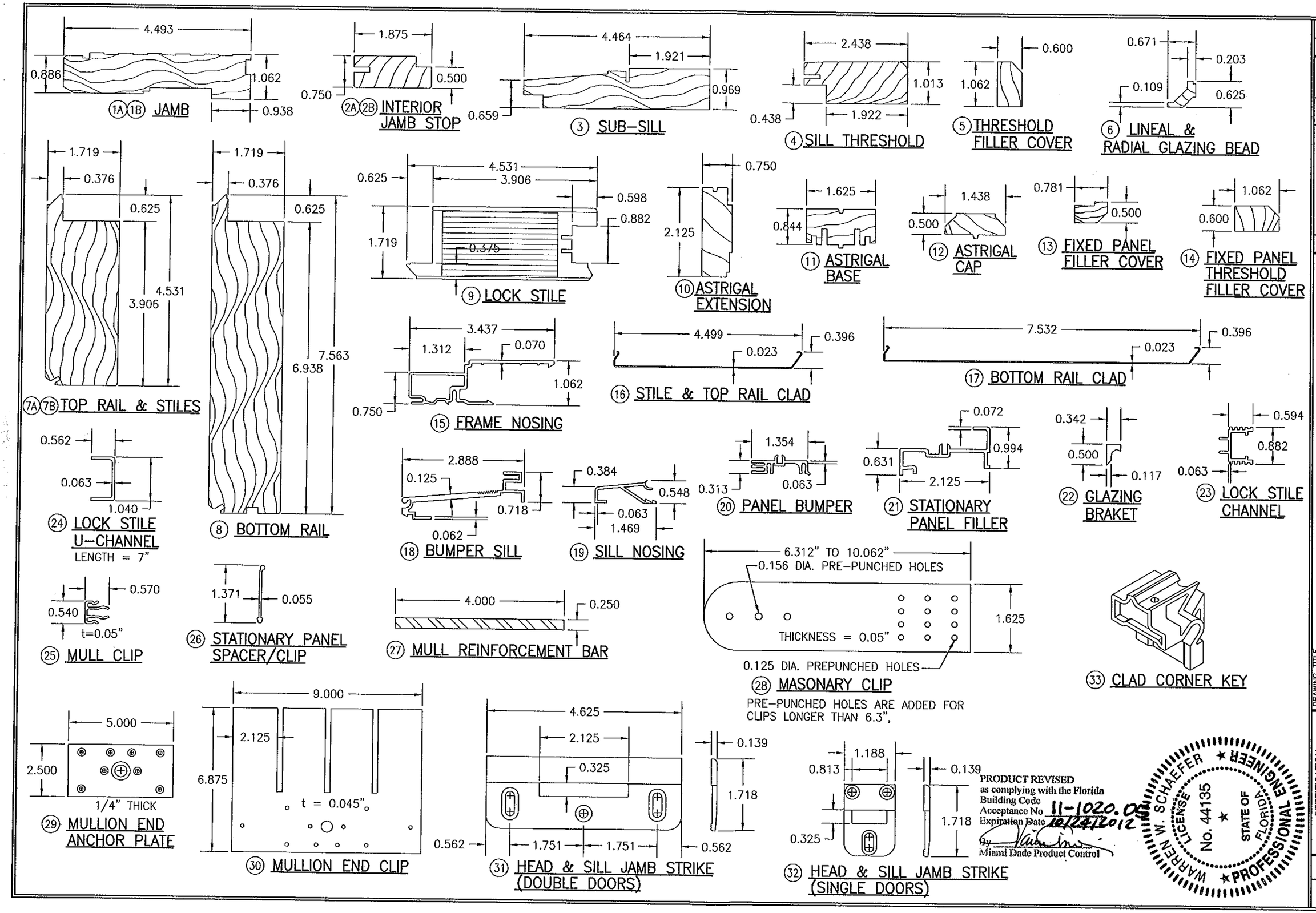
4.493
0.886
1.062
0.938
1A 1B JAMB
1.875
0.750
0.500
2A 2B INTERIOR JAMB STOP
4.464
1.921
0.659
0.969
3 SUB-SILL
2.438
0.438
1.922
1.013
4 SILL THRESHOLD
0.600
1.062
5 THRESHOLD FILLER COVER
0.671
0.203
0.109
0.625
6 LINEAL & RADIAL GLAZING BEAD
1.719
0.376
0.625
4.531
3.906
7A 7B TOP RAIL & STILES
1.719
0.376
0.625
7.563
6.938
8 BOTTOM RAIL
0.625
4.531
3.906
0.598
0.882
1.719
0.375
9 LOCK STILE
0.750
2.125
10 ASTRIGAL EXTENSION
1.625
0.844
11 ASTRIGAL BASE
1.438
0.500
12 ASTRIGAL CAP
0.781
0.500
13 FIXED PANEL FILLER COVER
1.062
0.600
14 FIXED PANEL THRESHOLD FILLER COVER
3.437
1.312
0.070
1.062
0.750
15 FRAME NOSING
4.499
0.023
0.396
16 STILE & TOP RAIL CLAD
7.532
0.023
0.396
17 BOTTOM RAIL CLAD
0.562
0.063
1.040
24 LOCK STILE U-CHANNEL
LENGTH = 7"
2.888
0.125
0.718
0.062
18 BUMPER SILL
0.384
0.548
0.063
1.469
19 SILL NOSING
1.354
0.313
0.063
20 PANEL BUMPER
0.072
0.994
0.631
2.125
21 STATIONARY PANEL FILLER
0.342
0.500
0.117
22 GLAZING BRAKET
0.594
0.882
0.063
23 LOCK STILE CHANNEL
0.570
0.540
t=0.05"
25 MULL CLIP
1.371
0.055
26 STATIONARY PANEL SPACER/CLIP
4.000
0.250
27 MULL REINFORCEMENT BAR
6.312" TO 10.062"
0.156 DIA. PRE-PUNCHED HOLES
1.625
THICKNESS = 0.05"
0.125 DIA. PREPUNCHED HOLES
28 MASONARY CLIP
PRE-PUNCHED HOLES ARE ADDED FOR CLIPS LONGER THAN 6.3",
33 CLAD CORNER KEY
5.000
2.500
1/4" THICK
29 MULLION END ANCHOR PLATE
9.000
2.125
6.875
t = 0.045"
30 MULLION END CLIP
4.625
2.125
0.325
0.139
1.718
0.562
1.751
1.751
0.562
31 HEAD & SILL JAMB STRIKE (DOUBLE DOORS)
1.188
0.813
0.139
1.718
0.325
32 HEAD & SILL JAMB STRIKE (SINGLE DOORS)
PRODUCT REVISED
as complying with the Florida
Building Code
Acceptance No 11-1020.06
Expiration Date 10/24/2012
By
Miami Dade Product Control
WARREN W. SCHAEFER
LICENSE
No. 44135
STATE OF FLORIDA
PROFESSIONAL ENGINEER
DRAWN BY: W.W.S.
CHECKED BY: W.W.S.
PLOT: 1=2
DATE: 04/10/02
NO.
REVISION DESCRIPTION
BY
DATE
DRAWING TITLE
ULTRA SERIES MANOR IMPACT DOOR
MANUFACTURER
KOLBE & KOLBE MILLWORK CO., INC.
1323 SOUTH 11TH AVE.
WAUSAU, WI 54401
715-842-5666
CONSULTANTS
W. W. SCHAEFER ENGINEERING & CONSULTING, P.A. (CA 6809)
7480 150TH COURT NORTH
PALM BEACH GARDENS, FL 33418
PHONE: 561-744-3424
CERTIFICATION
OCT 12 2011
WARREN W. SCHAEFER, P.E.
P.E. NO. 44135
DRAWING NO. 1060
REV. B
SHEET NO. 8 OF 9

ITEM #	PART	ITEM DESCRIPTION	MANUFACTURER/NOTES
		PARTS	
1A	2634	LINEAL FRAME JAMB	* WOOD
1B	2634	RADIAL FRAME JAMB	LVL
2A	2759	INTERIOR LINEAL JAMB STOP	* WOOD
2B	2759	INTERIOR RADIAL JAMB STOP	LVL
3	2771	SUB-SILL	* WOOD
4	2772	SILL THRESHOLD	* WOOD
5	2775	THRESHOLD FILLER COVER	* WOOD
6	1055	GLAZING BEAD	* WOOD
7A	1615	HINGED & FIXED STILES & LINEAL TOP RAIL	* WOOD
7B	1615	RADIAL TOP RAIL	* WOOD (FINGER JOINTED)
8	1617	BOTTOM RAIL	* WOOD
9	1645	LOCK STILE	LVL CORE WITH VINEER
10	2638	ASTRIGAL EXTENSION	* WOOD
11	2745	ASTRIGAL BASE	* WOOD
12	2734	ASTRIGAL CAP	* WOOD
13	2797	FIXED PANEL FILLER COVER	* WOOD
14	2775	FIXED PANEL THRESHOLD FILLER COVER	* WOOD
15	BU608	FRAME NOSING	6063-T5 ALUMINUM
16	BU013	STILE & TOP RAIL CLAD	5052 COLD ROLLED ALUMINUM
17	BU014	BOTTOM RAIL CLAD	5052 COLD ROLLED ALUMINUM
18	B1020	BUMPER SILL	6063-T5 ALUMINUM
19	B1024	SILL NOSING	6063-T5 ALUMINUM
20	B5025	PANEL BUMPER	RIGID PVC BY PPI
21	BU605	STATIONARY PANEL FILLER	6063-T5 ALUMINUM
22	B5800	GLAZING BRACKET	RIGID PVC BY CLIM-A-TECH IND.
23	B1099	LOCK STILE CHANNEL	6063-T5 ALUMINUM
24	B1601	7" LONG S.S. LOCK STILE U-CHANNEL	18-8 S.S. (TOP & BOT OF LOCK STILE)
25	BU817	MULLION CLIP	6063-T5 ALUMINUM
26	B1042	STATIONARY PANEL SPACER/CLIP	6063-T5 ALUMINUM
27	BMFVA	MULLION REINFORCEMENT BAR	A36 STEEL
28	BHDMS	1 5/8" WIDE X 0.05" THK. X MIN. 6 5/16" LONG MASONARY CLIP	ASTM A653 MIN. 33 KSI GALV. STEEL
29	BMFVA	MULLION END ANCHOR PLATE	A36 STEEL
30	BMFVA	MULLION END CLIP	ASTM A653 GALV. STL. (Fy = 50 ksi)
31	BHDXM	HEAD & SILL DOUBLE DOOR STRIKE	6105-T5 ALUMINUM
32	BHDXM	HEAD & SILL SINGLE DOOR STRIKE	6105-T5 ALUMINUM
33	BHDUX	CLAD CORNER KEY	POLYCARBONATE; DARTER PLASTICS
		SEALS & SEALANTS	
34	B5603	BULB/FIN WEATHERSTRIP	INTEK
35	B5089	SILL WEATHERSTRIP	AMESBURY GROUP INC.
36	B5605	BULB/FIN SECONDARY WEATHERSTRIP	INTEK
37	B5604	LEAF WEATHERSTRIP	SANTOPRENE & KRATON; INTEK
38	B5049	EXTERIOR PANEL WEATHERSTRIP	RIGID & FLEXABLE PVC; PPI
39	B5606	STATIONARY PANEL FILLER	RIGID & FLEXABLE PVC; CLIM-A-TECH
		HARDWARE	
40	BHDXM	5-POINT LOCK HARDWARE (ACTIVE PANEL)	HTL HLS-9000 SERIES
41	BHDXM	2-POINT LOCK HARDWARE (INACTIVE PANEL)	HTL HLS-9000 SERIES
42	–	HANDLE	AS REQ'D TO OPERATE LOCKS
43	BHG	4X4 BUTT HINGE W/STATIONARY PIN	LAWRENCE BROTHERS (S.S., STL, BRASS OR BRONZE)
44	BHG	4X4 BRONZE COMMERCIAL BUTT HINGE	LAWRENCE BROTHERS (S.S., STL, BRASS OR BRONZE)
45	BHG	4X4 ADJUSTABLE SET HINGE	HTL (S.S., PLATED STL, BRASS OR BRONZE)
46	BHG	4X4 ADJUSTABLE GUIDE HINGE	HTL (S.S., PLATED STL, BRASS OR BRONZE)

ITEM #	PART	ITEM DESCRIPTION	MANUFACTURER/NOTES
		MISCELLANEOUS FASTENERS	
47	–	1/8" X 1" STAPLE	2" FROM ENDS & 8" O.C.
48	–	#8 X 1 1/4" PPH ZINK SMS	1" FROM ENDS & 8" O.C.
49	–	#8 X 1 1/4" PPH SMS	2" FROM ENDS & 14" O.C.
50	–	#8 X 1 1/2" PFH SMS	4" FROM ENDS & 13.5" O.C.
51	–	3/4" 18 GA. BRAD NAIL	2" FROM ENDS & 8" O.C.
52	–	#6 X 1 1/4" PFH SMS SCREW	1" FROM ENDS & 8" O.C.
53	–	1/8" X 1 1/8" CROWN STAPLE	1/2" FROM ENDS & 8" O.C.
54	–	#8 X 1 3/4" SMS	4" FROM ENDS & 12" O.C.
55	–	#8 X 3" PFH SMS (2 ROWS)	2" FROM ENDS & 6 TO 8" O.C.
56	–	#10 X 3" PFH SMS	6 PER CHANNEL SPACED ALONG STILE
57	–	#10 X 3" PFH SMS	2 PER TOP & 1 PER BOTTOM U-CHANNEL
58	–	HINGE SCREWS	SEE HINGE FASTENING NOTE THIS SHEET

NOTE: WOOD USED IN TESTING WAS PINE WITH A SPECIFIC GRAVITY OF G = 0.43 & E = 1,200,000 PSI. OTHER WOOD SPECIES APPLICABLE FOR USE WITH THIS PRODUCT ARE THOSE WITH A SPECIFIC GRAVITY AND MODULUS OF ELASTICITY EQUAL TO OR GREATER THAN THAT USED WITH TESTING. ALL WOOD IS MINIMUM GRADE 2 MILLED BY KOLBE & KOLBE TO SELECT.

HINGE FASTENING:

COMMERCIAL BUTT HINGE NO 44:
TO PANEL: NO. 12 X 1 1/4" PFH BRASS OR S.S. (4 PER HINGE)
TO FRAME: NO. 12 X 1 1/4" PFH BRASS OR S.S. (2 PER TOP & BOTTOM HINGE; 3 PER MIDDLE HINGE)

BUTT HINGE NO. 43:
TO PANEL: NO. 10 X 3/4" & #10 X 2" PFH BRASS OR S.S. (2 EACH PER TOP & BOTTOM HINGE; THREE 3/4" & ONE 2" PER EA. MIDDLE HINGE)
TO FRAME: NO. 10 X 3/4" PFH BRASS OR S.S. (2 PER TOP & BOTTOM HINGE; 3 PER MIDDLE HINGE) (SEE SECTIONS FOR ADDITIONAL LONG SCREW INTO SUBSTRATE)

ADJUSTABLE HINGE NO. 45 & 46:
TO PANEL: NO. 8 X 1 3/4" PFH BRASS OR S.S. (4 PER HINGE)
TO FRAME: NO. 9 X 3/4" PFH BRASS OR S.S. (2 PER TOP & BOTTOM HINGE; 3 PER MIDDLE HINGE) (SEE SECTIONS FOR ADDITIONAL LONG SCREW INTO SUBSTRATE)

PRODUCT REVISED
as complying with the Florida
Building Code
Acceptance No 11-1020.05
Expiration Date 10/24/2012
By
Miami Dade Product Control

WARREN W. SCHAEFER ★ ENGINEER ★ LICENSE No. 44135 STATE OF FLORIDA ★ PROFESSIONAL

NO.	REVISION DESCRIPTION	BY	DATE

DRAWN BY: W.W.S. | CHECKED BY: W.W.S.
PLOT: 1=2 | DATE: 04/10/02

DRAWING TITLE: ULTRA SERIES MANOR IMPACT DOOR

MANUFACTURER: KOLBE & KOLBE MILLWORK CO., INC.
1323 SOUTH 11TH AVE.
WAUSAU, WI 54401
715-842-5666

CONSULTANTS: W. W. SCHAEFER ENGINEERING & CONSULTING, P.A. (CA 6809)
7480 150TH COURT NORTH
PALM BEACH GARDENS, FL 33418
PHONE: 561-744-3424

CERTIFICATION: OCT 12 2011
WARREN W. SCHAEFER, P.E.
P.E. NO. 44135

DRAWING NO. 1060 | REV. B
SHEET NO. 9 OF 9