MIAMI-DADE COUNTY
DEPARTMENT OF PERMITTING, ENVIRONMENT, AND REGULATORY AFFAIRS (PERA)
BOARD AND CODE ADMINISTRATION DIVISION

# NOTICE OF ACCEPTANCE (NOA)

MIAMI-DADE COUNTY
PRODUCT CONTROL SECTION
11805 SW 26 Street, Room 208
Miami, Florida 33175-2474
T (786) 315-2590 F (786) 315-2599
www.miamidade.gov/pera/

**Peetz Windows and Doors, Inc.**
**15951 S.W. 41 Street, Suite 150**
**Weston, FL 33331**

**SCOPE:**

This NOA is being issued under the applicable rules and regulations governing the use of construction materials. The documentation submitted has been reviewed and accepted by Miami-Dade County PERA -Product Control Section to be used in Miami Dade County and other areas where allowed by the Authority Having Jurisdiction (AHJ).

This NOA shall not be valid after the expiration date stated below. The Miami-Dade County Product Control Section (In Miami Dade County) and/or the AHJ (in areas other than Miami Dade County) reserve the right to have this product or material tested for quality assurance purposes. If this product or material fails to perform in the accepted manner, the manufacturer will incur the expense of such testing and the AHJ may immediately revoke, modify, or suspend the use of such product or material within their jurisdiction. PERA reserves the right to revoke this acceptance, if it is determined by Miami-Dade County Product Control Section that this product or material fails to meet the requirements of the applicable building code.
This product is approved as described herein, and has been designed to comply with the Florida Building Code, including the High Velocity Hurricane Zone.

**DESCRIPTION: Series "Lift & Slide Bronze Clad" Wood Sliding Glass Doors – L.M.I.**

**APPROVAL DOCUMENT:** Drawing No. **1632 Rev A**, titled "Lift & Slide Bronze Clad Sliding Glass Impact Doors", sheets 1 through 31 of 31, dated 04/04/09 and last revised on OCT 19, 2011, prepared by W. W. Schafer Engineering & Consulting, P. A., signed and sealed by Warren W. Schafer, P. E., bearing the Miami-Dade County Product Control Revision stamp with the Notice of Acceptance number and Expiration date by the Miami-Dade County Product Control Section.

**MISSILE IMPACT RATING: Large and Small Missile Impact Resistant**
**Limitation:**

1. Pocket walls are under separate approval.
2. Maximum Panel O.C. width not to exceed 61.5". Min two (2) intermediate anchors are required for panel OC width between 48" to 61.5".
3. Use of ¼" Powers Rawl Tapper (410 SS) in CMU (Side Jambs) is not applicable.

**LABELING:** Each unit shall bear a permanent label with the manufacturer's name or logo, Kall/Eifel, Germany and series and following statement: "Miami-Dade County Product Control Approved", unless otherwise noted herein.

**RENEWAL** of this NOA shall be considered after a renewal application has been filed and there has been no change in the applicable building code negatively affecting the performance of this product.

**TERMINATION** of this NOA will occur after the expiration date or if there has been a revision or change in the materials, use, and/or manufacture of the product or process. Misuse of this NOA as an endorsement of any product, for sales, advertising or any other purposes shall automatically terminate this NOA. Failure to comply with any section of this NOA shall be cause for termination and removal of NOA.

**ADVERTISEMENT:** The NOA number preceded by the words Miami-Dade County, Florida, and followed by the expiration date may be displayed in advertising literature. If any portion of the NOA is displayed, then it shall be done in its entirety.

**INSPECTION:** A copy of this entire NOA shall be provided to the user by the manufacturer or its distributors and shall be available for inspection at the job site at the request of the Building Official.

This NOA **revises NOA # 10-0504.02** and consists of this page 1 and evidence pages E-1, as well as approval document mentioned above.
The submitted documentation was reviewed by **Ishaq I. Chanda, P.E.**

4
11/29/11

MIAMI-DADE COUNTY APPROVED

## NOTICE OF ACCEPTANCE: EVIDENCE SUBMITTED

**A. DRAWINGS** (transferred from file # **10-0504.02**)

1. Manufacturer's die drawings and sections.
2. Drawing No. **1632 Rev A**, titled "Lift & Slide Bronze Clad Sliding Glass Impact Doors", sheets 1 through 31 of 31, dated 04/04/09 and last revised on OCT 19, 2011, prepared by W. W. Schafer Engineering & Consulting, P. A., signed and sealed by Warren W. Schafer, P.E.

(Note: The revision consist of compliance to FBC 2010 only)

**B. TESTS** (transferred from file # **10-0504.02**)

1. Test reports on: 1) Air Infiltration Test, per FBC, TAS 202-94
   2) Uniform Static Air Pressure Test, Loading per FBC TAS 202-94
   3) Water Resistance Test, per FBC, TAS 202-94
   4) Large Missile Impact Test per FBC, TAS 201-94
   5) Cyclic Wind Pressure Loading per FBC, TAS 203-94
   6) Forced Entry Test, per FBC 2411 3.2.1, TAS 202-94

Along with marked-up drawings and installation diagram of Lift and Slider with pocket, prepared by Hurricane Test Laboratory, LLC, Test Report No. **HTL–0284–1009–07**, dated 09/29/08, **HTL–0284–0526–03**, dated 03/14/2005, **HTL–0284–1018–04**, dated 03/14/2005, **HTL–0284–1205–04**, dated 03/14/2005, and **HTL–0284–1113–01**, dated 03/14/2005, all signed and sealed by Vinu J. Abraham, P. E.

**C. CALCULATIONS**

1. Statement letters of conformance to FBC 2010, dated OCT 19, 2011, prepared by W. W. Schafer Engineering & Consulting, P. A., signed and sealed by Warren W. Schafer, P.E.
2. Anchor verification calculations complying w/ FBC-2007, dated 02-22-09, prepared, signed and sealed by Warren W. Schafer, P.E. (transferred from file # **10-0504.02**)
3. Glazing complies with ASTME-1300-02 &-04

**D. QUALITY ASSURANCE**

1. Miami Dade Department of Permitting, Environment, and Regulatory Affairs (PERA).

**E. MATERIAL CERTIFICATIONS**

1. Notice of Acceptance No. **08-1224.04** issued to Solutia, for "**Saflex Composite Glass Interlayer w/ PET**", expiring on 12/11/2013.
2. Notice of Acceptance No. **11-0325.05** issued to Solutia Inc. for "**Saflex Clear or colored interlayer**", expiring on May 21, 2016.

**F. STATEMENTS**

1. Statement letters of conformance to FBC 2010, dated OCT 19, 2011, prepared by W. W. Schafer Engineering & Consulting, P. A., signed and sealed by Warren W. Schafer, P.E.
2. Statement letters of conformance to FBC 2007 and "No financial interest", both dated February 23, 2009, prepared by W. W. Schafer Engineering & Consulting, P. A., signed and sealed by Warren W. Schafer, P.E.( transferred from file # **10-0504.02**)
3. Statement of compliance, issued as part of the above referenced test reports.
4. Distributor Agreement documents in conformance to BCCO guidelines dated April 23, 2009 signed by Christian Peetz, President of Helmut Peetz, GmbH, and by Eva Leon, V. P. of Peetz Windows And Doors, Inc.

**G. OTHER**

1. This NOA **revises** NOA # **10-0504.02**, expiring on 11/24/15.
2. Test Proposals # **06-0091**, approved by BCCO.

Ishaq I. Chanda

**Ishaq I. Chanda, P.E.**
**Product Control Examiner**
**NOA No 11-1024.13**
**Expiration Date: November 24, 2015**
**Approval Date: December 08, 2011**

## GENERAL NOTES:

1. THESE DOOR SYSTEMS HAVE BEEN TESTED, ANALYZED & APPROVED FOR DESIGN PRESSURES NOT TO EXCEED THOSE SHOWN IN THE "ALLOWABLE DESIGN PRESSURE" TABLE(S).
2. OPENINGS, BUCKING & BUCKING FASTENERS MUST BE PROPERLY DESIGNED & INSTALLED TO TRANSFER WIND LOADS TO THE STRUCTURE.
3. ALL HARDWARE & FASTENERS SHALL BE IN ACCORDANCE WITH THESE DRAWINGS & SHALL NOT VARY UNLESS SPECIFICALLY MENTIONED ON THE DRAWINGS. SPECIFIED ANCHOR EMBED TO BASE MATERIAL SHALL BE BEYOND WALL FINISH OR STUCCO.
4. THE DETAILS & SPECIFICATIONS SHOWN HEREIN REPRESENT THE PRODUCTS TESTED & PROPOSED FOR WATER, AIR, IMPACT, CYCLIC & UNIFORM STATIC AIR PRESSURE TESTING IN CONFORMANCE WITH THE FLORIDA BUILDING CODE PROTOCALS TAS-201, 202 & 203 FOR LARGE MISSILE IMPACT DOORS.
5. THESE DOOR SYSTEMS HAVE BEEN DESIGNED IN ACCORDANCE WITH AND MEET THE REQUIREMENTS OF THE FLORIDA BUILDING CODE (FBC) INCLUDING HIGH VELOCITY HURRICANE ZONES (HVHZ).
6. IMPACT SHUTTERS ARE NOT REQUIRED WITH THESE DOORS.
7. ALL ANCHORS SECURING DOOR FRAME TO PRESSURE TREATED BUCKS OR WOOD FRAMING SHALL BE CAPABLE OF RESISTING CORROSION CAUSED BY THE PRESSURE TREATING CHEMICALS IN THE WOOD.
8. DETERMINE THE POSITIVE & NEGATIVE DESIGN LOADS TO USE WHEN REFERENCING THESE DOCUMENTS IN ACCORDANCE WITH THE GOVERNING CODE AND GOVERNING WIND VELOCITY. FOR WIND LOAD CALCULATIONS IN ACCORDANCE WITH THE FLORIDA BUILDING CODE, A DIRECTIONALITY FACTOR OF Kd = 0.85 MAY BE APPLIED PER THE ASCE 7 STANDARD.
9. NO INCREASE IN ALLOWABLE STRESS HAS BEEN USED IN THE CERTIFICATION OF THIS PRODUCT. WIND LOAD DURATION FACTOR Cd = 1.6 WAS USED FOR WOOD SCREW ANALYSIS ONLY.
10. MATERIALS, INCLUDING BUT NOT LIMITED TO STEEL SCREWS, THAT COME INTO CONTACT WITH OTHER DISSIMILAR MATERIALS SHALL MEET THE REQUIREMENTS OF FLORIDA BUILDING CODE CHAPTER 20.
11. All WOOD MEMBERS OF DOORS THAT MAY POSSIBLY COME INTO CONTACT WITH MASONRY OR CONCRETE SUBSTRATES, ARE SUBJECT TO MOISTURE &/OR ARE SUBJECT TO THE OUTSIDE ENVIRONMENT SHALL BE OF AN APPROVED DURABLE SPECIES OR BE TREATED IN AN APPROVED METHOD WITH AN APPROVED PRESERVATIVE PER FBC SECTION 2326.

| LOCKING BOLT QUANTITY REQUIREMENTS | |
|---|---|
| (1) SASH HEIGHT | QUANTITY PER PANEL |
| OVER 104 1/2" | 5 |
| 89" TO 104 1/2" | 4 |
| LESS THAN 89" | 3 |
| (1) SASH HEIGHT DIMENSIONS ARE APPROXIMATELY 5" LESS THAN THE FRAME HEIGHT | |

| INTERLOCK QUANTITY REQUIREMENTS | |
|---|---|
| (1) SASH HEIGHT | QUANTITY PER PANEL |
| OVER 84 7/8" | 4 |
| LESS THAN 84 7/8" | 3 |
| (1) SASH HEIGHT DIMENSIONS ARE APPROXIMATELY 5" LESS THAN THE FRAME HEIGHT | |

PRODUCT REVISED
as complying with the Florida
Building Code
Acceptance No. 11-1024.13
Expiration Date 11/24/2015
By Shaq J. Chandler
Miami-Dade Product Control

| ALLOWABLE DESIGN PRESSURE (ALL DOOR CONDITIONS) |
|---|
| +/-70 PSF |

### FRAME ANCHOR REQUIREMENTS TABLE

| (1) OPENING TYPE (SUBSTRATE) | FRAME/CLIP TO OPENING FASTENER TYPE | MINIMUM EMBED | MINIMUM EDGE DIST. |
|---|---|---|---|
| **FRAME SCREWS** | | | |
| MIN. 2X_ WOOD FRAME OR BUCK (MIN. GR. 3 & G=0.55) | 1/4" CONCRETE SCREW | 1 1/4" | 1 1/2" |
| MIN. 16 GA. 33 KSI METAL STUD | 1/4" GR. 5 SELF TAP/DRILL SCREW | FULL | 1 1/2" |
| MIN. 1/8" THK A36 STEEL | 1/4" GR. 5 SELF TAP/DRILL SCREW | FULL | 1 1/2" |
| MIN. 1/8" THK 6063-T5 ALUM. | 1/4" GR. 5 SELF TAP/DRILL SCREW | FULL | 1 1/2" |
| (3) C-90 CMU/2500 PSI CONCRETE | (2) 1/4" CONCRETE SCREW | 1 1/2" | 2 1/2" |
| **MOUNTING CLIP SCREWS** | | | |
| MIN. 2X_ WOOD FRAME OR BUCK (MIN. GR. 3 & G=0.55) | NO. 8 X 1 1/2" SMS | 1 3/8" | 1/2" |
| MIN. 18 GA. 33 KSI METAL STUD | NO. 8 GR. 5 SELF TAP/DRILL SCREW | FULL | 1/2" |
| MIN. 1/8" THK A36 STEEL | NO. 8 GR. 5 SELF TAP/DRILL SCREW | FULL | 1/2" |
| MIN. 1/8" THK 6063-T5 ALUM. | NO. 8 GR. 5 SELF TAP/DRILL SCREW | FULL | 1/2" |

(1) SUPPORTING SUBSTRATE DEPTH SHALL BE SUCH THAT ALL DOOR FRAME/SILL MEMBER EDGES DO NOT EXTEND MORE THAN 1 1/2" PAST THE SUPPORTING SUBSTRATE EDGES.
(2) CONCRETE SCREWS SHALL BE ELCO ULTRACONS, ITW RAMSET/RED HEAD TAPCONS, HILTI KWIK-CON II OR POWERS RAWL TAPPER (HARDENED STEEL OR S.S.).
(3) CMU IS APPLICABLE AT SIDES ONLY (NOT AT HEAD OR SILL)

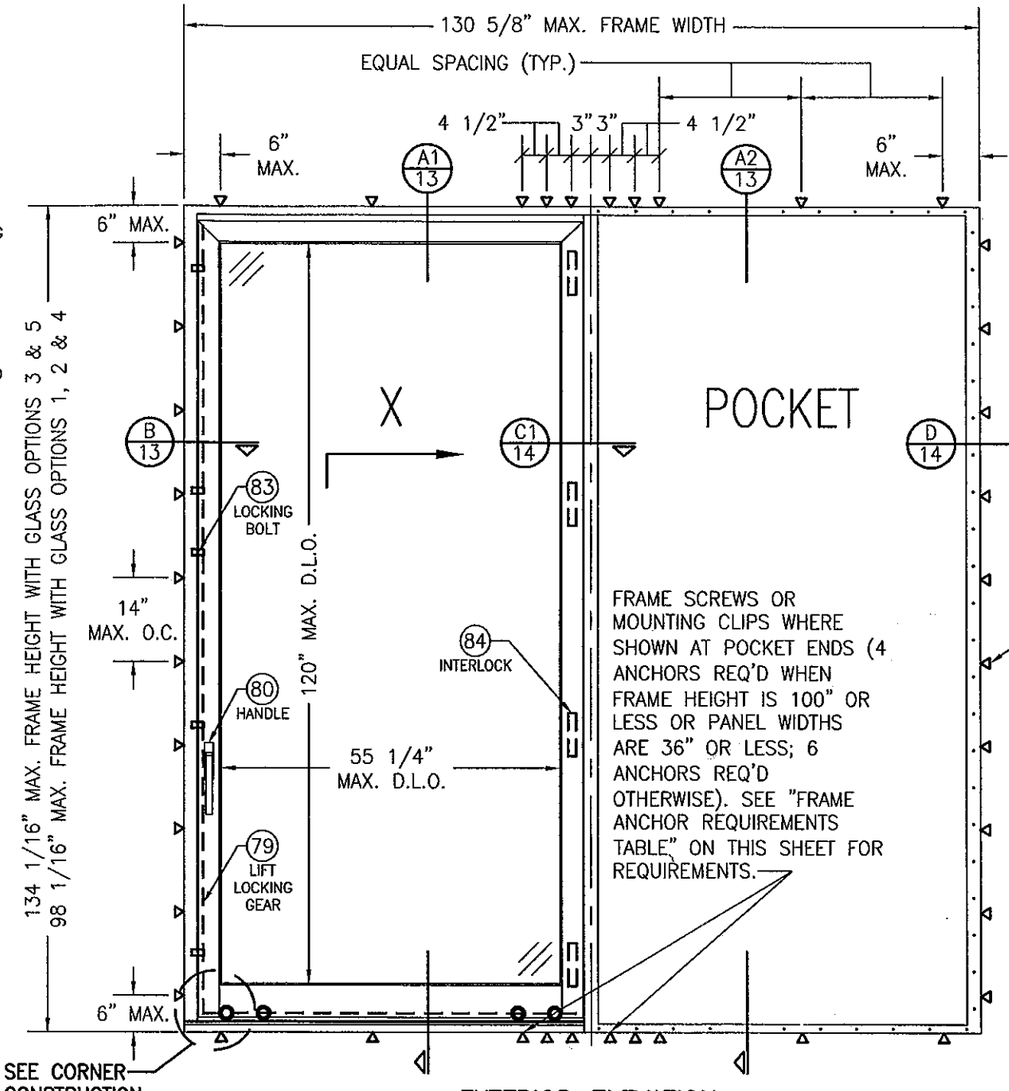


EXTERIOR ELEVATION:
1 PANEL DEEP X DOOR WITH POCKET
SCALE: 1/2" = 1'-0"

FOR SIMPLIFICATION, ONLY FRAME & SASH PROJECTION LINES ARE SHOWN FOR THESE ELEVATIONS

### CORNER CONSTRUCTION:

FRAME HEAD: JAMB MEMBERS ARE COPED, BUTTED & JOINED TO HEAD WITH NO. 10" X 4 3/4" WOOD SCREWS & GLUED/SEALED WITH BINDAN D4; (6 SCREWS REQ'D WITH 4 & 3 PANEL DEEP FRAMES, 4 SCREWS REQ'D WITH 2 PANEL DEEP FRAMES & 3 SCREWS REQ'D WITH 1 PANEL DEEP FRAMES)
FRAME SILL:
OPTION 1: JAMB MEMBERS ARE COPED, BUTTED & JOINED TO SILL WITH M8 X 1 9/16" MACHINE SCREWS THRU THE SILL BASE INTO THE JAMB MEMBERS THREADED INSERT; (4 SCREWS REQ'D WITH 4 PANEL DEEP FRAMES, 3 SCREWS REQ'D WITH 3 PANEL DEEP FRAMES, 2 SCREWS REQ'D WITH 2 & 1 PANEL DEEP FRAMES) & SEALED WITH SG20 SILICONE.
OPTION 2: JAMB MEMBERS ARE SQUARE CUT, BUTTED & JOINED TO SILL WITH M8 x 3 15/16" CYLINDER SCREWS THRU THE SILL BASE INTO THE JAMB MEMBERS DOWELS; (3 SCREWS REQ'D WITH 4 & 3 PANEL DEEP FRAMES & 2 SCREWS REQ'D WITH 2 & 1 PANEL DEEP FRAMES) & SEALED WITH A RUBBER GASKET.
TOP RAIL TO STILE: MEMBERS ARE COPED, BUTTED & JOINED WITH SIX(6) 0.394" X 3.150" DOWELS & GLUED/SEALED WITH BINDAN D4.
BOTTOM RAIL TO STILE: MEMBERS ARE COPED, BUTTED & JOINED WITH TEN(10) 0.394" X 3.150" DOWELS & GLUED/SEALED WITH BINDAN D4.
FRAME CLAD: MEMBERS ARE MITERED TOGETHER & WELDED ON THE INTERIOR SIDE.
SASH CLAD (TOP RAIL TO STILE): MEMBERS ARE MITERED TOGETHER & WELDED TOGETHER ON THE INTERIOR SIDE.
SASH CLAD (BOTTOM RAIL TO STILE): MEMBERS ARE COPED, BUTTED & WELDED TOGETHER ON THE INTERIOR SIDE.

THESE DRAWINGS ARE APPLICABLE ONLY TO THE PRODUCT SPECIFIED. THEY MAY NOT BE USED FOR THE ASSEMBLY AND/OR INSTALLATION OF ANY OTHER PRODUCT NOR MAY THEY BE USED FOR RATIONAL AND/OR LOCAL APPROVAL OF ANY PRODUCT NOT PRODUCED BY THE MANUFACTURER STATED ON THESE DRAWINGS.

DRAWN BY: W.R.M. | CHECKED BY: W.W.S.
PLOT: 1=24 | DATE: 04/04/09

| NO. | REVISION DESCRIPTION / CHANGE CONSULTANTS ADDRESS | BY | DATE |
|---|---|---|---|
| A1 | | W.R.M. | 10/19/11 |

DRAWING TITLE: LIFT & SLIDE BRONZE CLAD SLIDING GLASS IMPACT DOORS

MANUFACTURER: PEETZ WINDOWS & DOORS, 15951 S.W. 41ST STREET; SUITE 150, WESTON, FL 33331, 954-659-3887

CONSULTANTS: W. SCHAEFER ENGINEERING & CONSULTING, P.A. (CA 6809), 7480 150TH COURT NORTH, PALM BEACH GARDENS, FL 33418, PHONE: 561-744-3424

CERTIFICATION

WARREN W. SCHAEFER LICENSE No. 44135 STATE OF FLORIDA PROFESSIONAL ENGINEER

OCT 19 2011

WARREN W. SCHAEFER, P.E. P.E. NO. 44135

DRAWING NO. 1632 | REV. A

SHEET NO. 1 OF 31

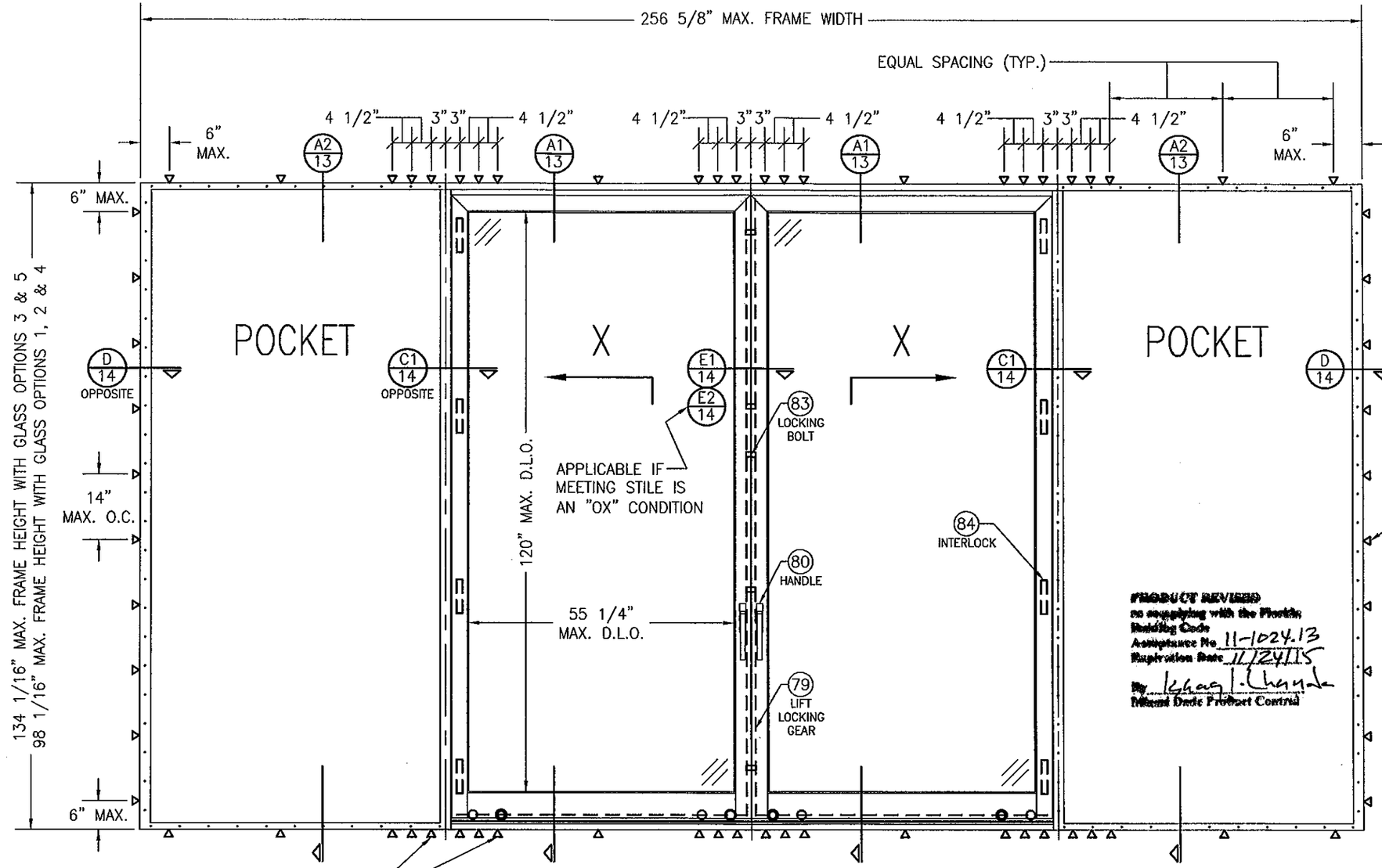


FRAME SCREWS OR MOUNTING CLIPS WHERE SHOWN AT MEETING STILE & POCKET ENDS (4 ANCHORS REQ'D WHEN FRAME HEIGHT IS 100" OR LESS OR PANEL WIDTHS ARE 36" OR LESS; 6 ANCHORS REQ'D OTHERWISE). SEE "FRAME ANCHOR REQUIREMENTS TABLE" ON SHEET 1 FOR REQUIREMENTS.

## EXTERIOR ELEVATION:
## 1 PANEL DEEP X–X DOOR WITH POCKETS

SCALE: 1/2" = 1'–0"

FOR SIMPLIFICATION, ONLY FRAME & SASH PROJECTION LINES ARE SHOWN FOR THESE ELEVATIONS

PRODUCT REVISED
to complying with the Florida Building Code
Acceptance No. 11-1024.13
Expiration Date 11/24/15
By Ishaq I. Chanda
Miami-Dade Product Control

WARREN W. SCHAEFER LICENSE No. 44135 STATE OF FLORIDA PROFESSIONAL ENGINEER

DRAWN BY: W.R.M. | CHECKED BY: W.W.S.
PLOT: 1=24 | DATE: 04/04/09

| NO. | REVISION DESCRIPTION | BY | DATE |
|---|---|---|---|

MANUFACTURER
PEETZ WINDOWS & DOORS
15951 S.W. 41ST STREET; SUITE 150
WESTON, FL 33331
954-659-3887

DRAWING TITLE
LIFT & SLIDE BRONZE CLAD SLIDING GLASS IMPACT DOORS (FL 9809)

CONSULTANTS
W. W. SCHAEFER ENGINEERING & CONSULTING, P.A. (CA 6809)
7480 150TH COURT NORTH
PALM BEACH GARDENS, FL 33418
PHONE: 561-744-3424

CERTIFICATION
OCT 19 2011
WARREN W. SCHAEFER, P.E.
P.E. NO. 44135

DRAWING NO. 1632 | REV. A
SHEET NO. 2 OF 31

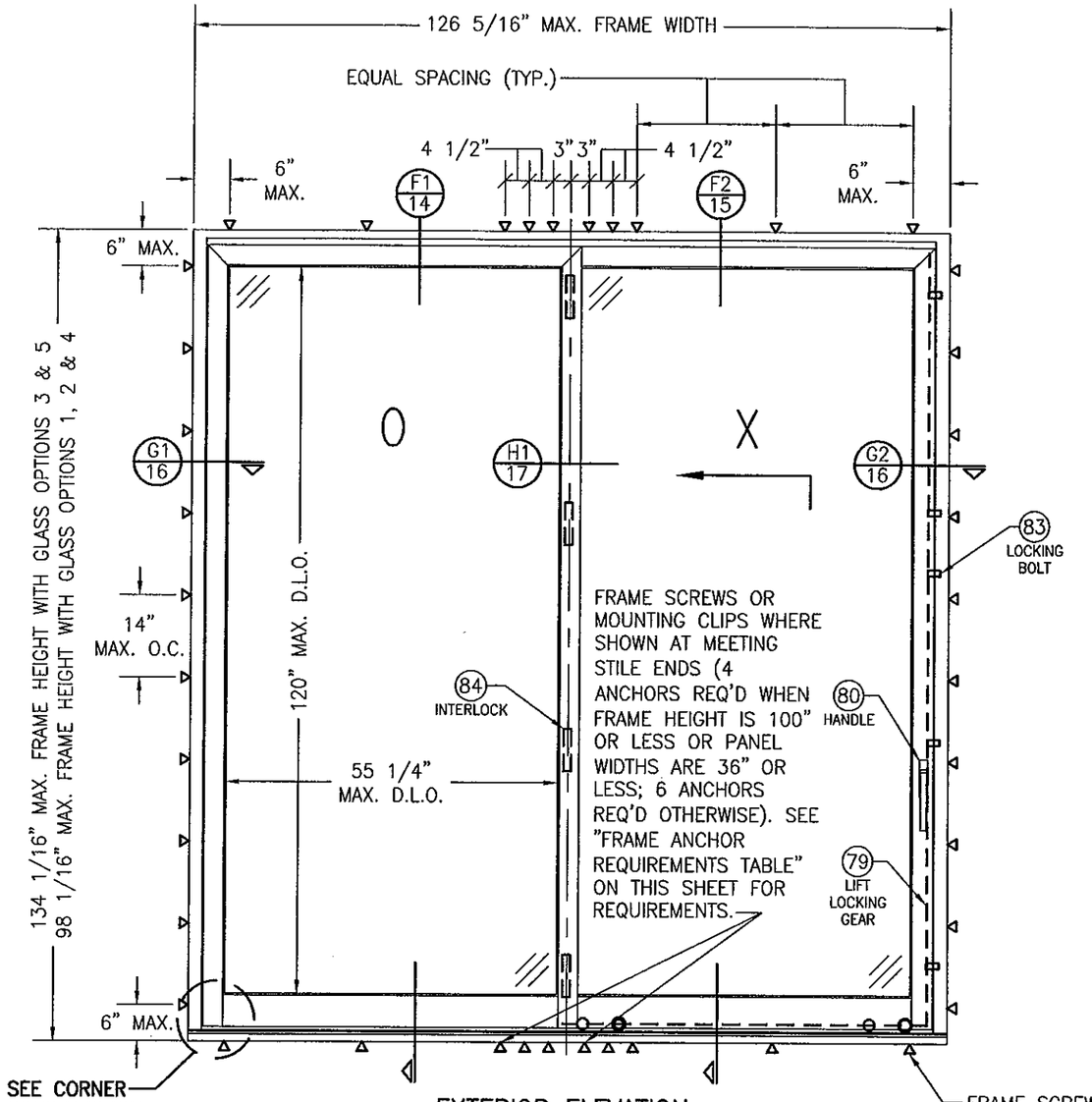


EXTERIOR ELEVATION:
2 PANEL DEEP OX DOOR WITHOUT POCKETS

SCALE: 1/2" = 1'-0"

SEE APPROVED CONFIGURATIONS ON SHEET 12 FOR ADDITIONAL 2-DEEP PANELS

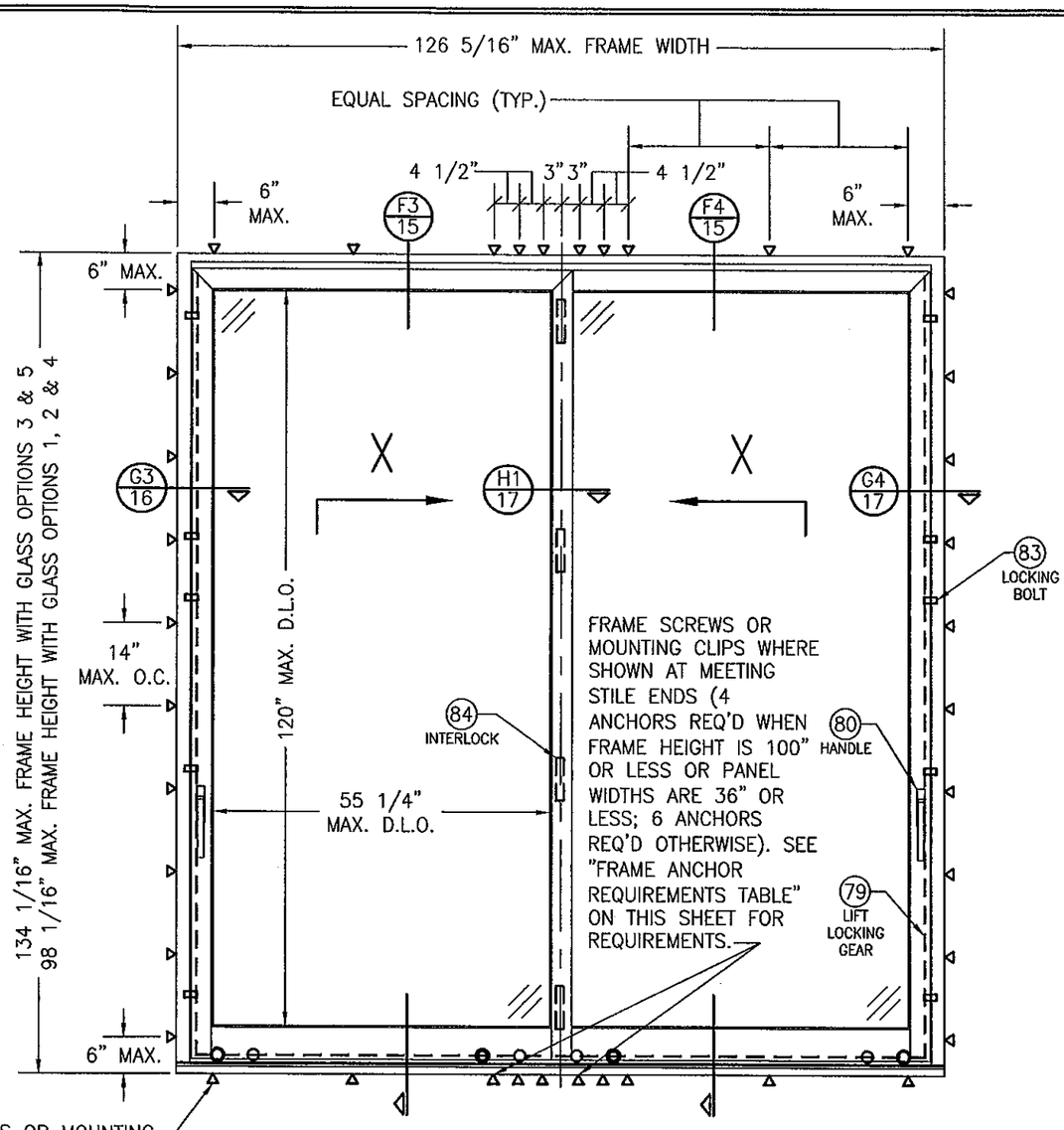


EXTERIOR ELEVATION:
2 PANEL DEEP XX DOOR WITHOUT POCKETS

SCALE: 1/2" = 1'-0"

SEE APPROVED CONFIGURATIONS ON SHEET 12 FOR ADDITIONAL 2-DEEP PANELS

FOR SIMPLIFICATION, ONLY FRAME & SASH PROJECTION LINES ARE SHOWN FOR THESE ELEVATIONS

PRODUCT REVISED
as complying with the Florida Building Code
Acceptance No. 11-1024.13
Expiration Date 11/24/15
By Ishaq I. Chanda
Miami Dade Product Control

WARREN W. SCHAEFER ★ PROFESSIONAL ENGINEER ★ LICENSE No. 44135 ★ STATE OF FLORIDA

| DRAWN BY: W.R.M. | CHECKED BY: W.W.S. |
|---|---|
| PLOT: 1=24 | DATE: 04/04/09 |

| NO. | REVISION DESCRIPTION | BY | DATE |
|---|---|---|---|

DRAWING TITLE
LIFT & SLIDE BRONZE CLAD SLIDING GLASS IMPACT DOORS

MANUFACTURER
PEETZ WINDOWS & DOORS
15951 S.W. 41ST STREET; SUITE 150
WESTON, FL 33331
954-659-3887

CONSULTANTS
W. W. SCHAEFER ENGINEERING & CONSULTING, P.A. (CA 6809)
7480 150TH COURT NORTH
PALM BEACH GARDENS, FL 33418
PHONE: 561-744-3424

CERTIFICATION
OCT 19 2011
WARREN W. SCHAEFER, P.E.
P.E. NO. 44135

DRAWING NO. 1632 REV. A

SHEET NO. 3 OF 31

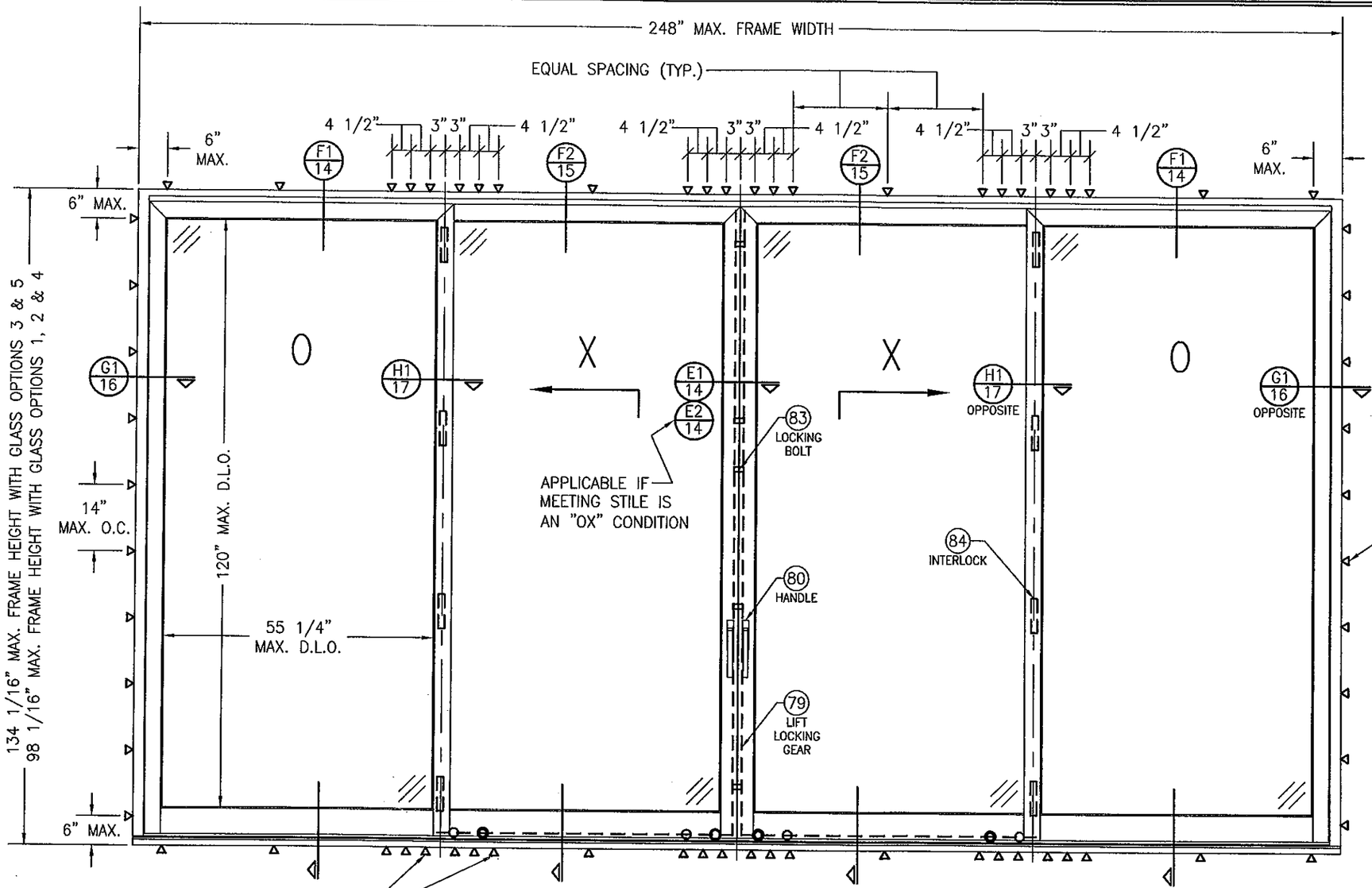


FRAME SCREWS OR MOUNTING CLIPS WHERE SHOWN AT MEETING STILE ENDS (4 ANCHORS REQ'D WHEN FRAME HEIGHT IS 100" OR LESS OR PANEL WIDTHS ARE 36" OR LESS; 6 ANCHORS REQ'D OTHERWISE). SEE "FRAME ANCHOR REQUIREMENTS TABLE" ON THIS SHEET FOR REQUIREMENTS.

## EXTERIOR ELEVATION:
## 2 PANEL DEEP OX-XO DOOR WITHOUT POCKETS

SCALE: 1/2" = 1'-0"

SEE APPROVED CONFIGURATIONS ON SHEET 12 FOR ADDITIONAL 2-DEEP PANELS

FOR SIMPLIFICATION, ONLY FRAME & SASH PROJECTION LINES ARE SHOWN FOR THESE ELEVATIONS

PRODUCT REVISED
to complying with the Florida Building Code
Acceptance No 11-1024.13
Expiration Date 10/29/15
By [signature]
Miami-Dade Product Control

WARREN W. SCHAEFER LICENSE No. 44135 STATE OF FLORIDA PROFESSIONAL ENGINEER

| DRAWN BY: W.R.M. | CHECKED BY: W.W.S. |
|---|---|
| PLOT: 1=24 | DATE: 04/04/09 |

| NO. | REVISION DESCRIPTION | BY | DATE |
|---|---|---|---|
| | | | |

DRAWING TITLE
LIFT & SLIDE BRONZE CLAD SLIDING GLASS IMPACT DOORS

MANUFACTURER
PEETZ WINDOWS & DOORS
15951 S.W. 41ST STREET; SUITE 150
WESTON, FL 33331
954-659-3887

CONSULTANTS
W. W. SCHAEFER ENGINEERING & CONSULTING, P.A. (CA 6809)
7480 150TH COURT NORTH
PALM BEACH GARDENS, FL 33418
PHONE: 561-744-3424

CERTIFICATION
OCT 19 2011
WARREN W. SCHAEFER, P.E.
P.E. NO. 44135

DRAWING NO. 1632 | REV. A
SHEET NO. 4 OF 31

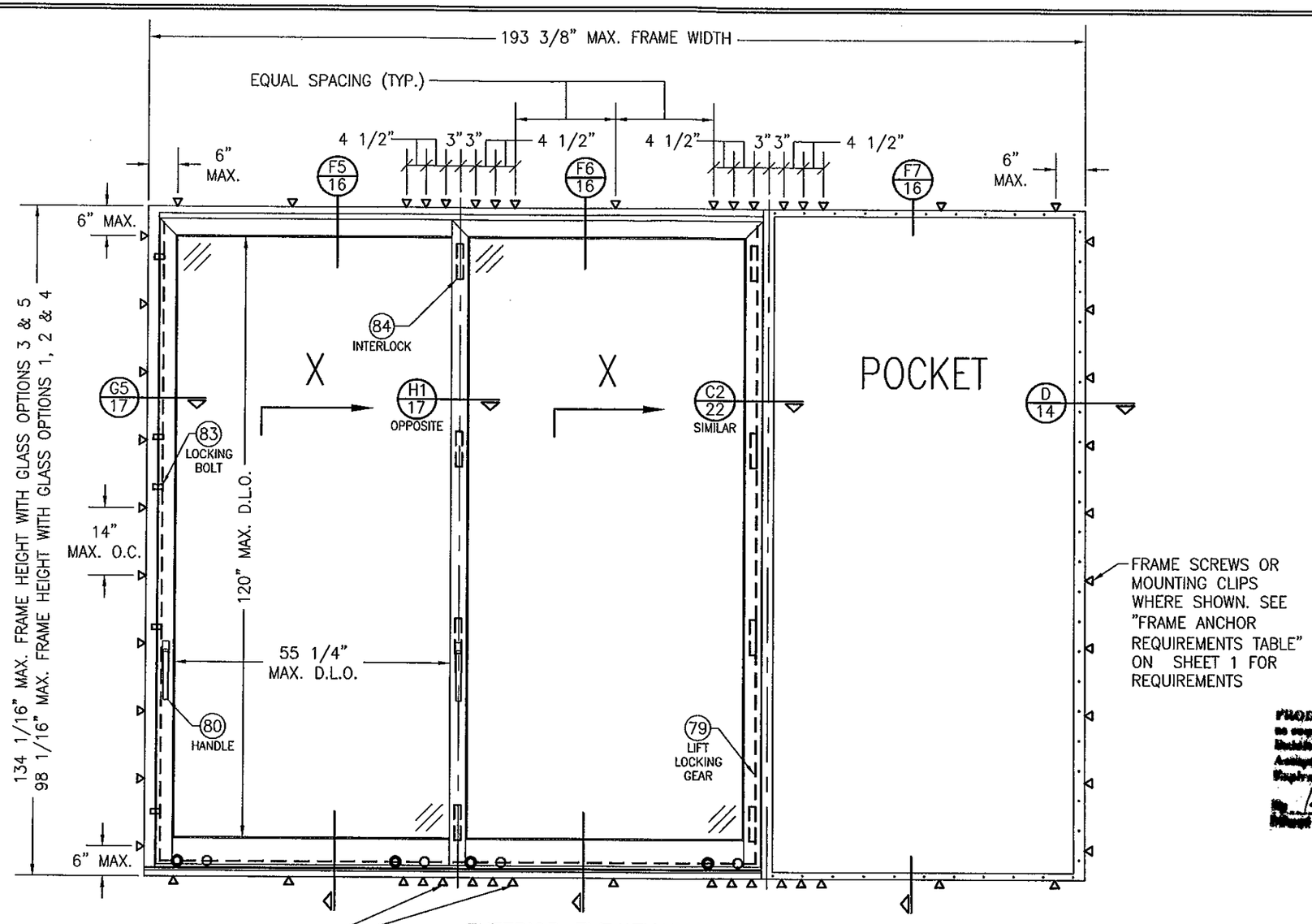


FRAME SCREWS OR MOUNTING CLIPS WHERE SHOWN AT MEETING STILE & POCKET ENDS (4 ANCHORS REQ'D WHEN FRAME HEIGHT IS 100" OR LESS OR PANEL WIDTHS ARE 36" OR LESS; 6 ANCHORS REQ'D OTHERWISE). SEE "FRAME ANCHOR REQUIREMENTS TABLE" ON SHEET 1 FOR REQUIREMENTS.

## EXTERIOR ELEVATION: 2 PANEL DEEP XX DOOR WITH POCKET

SCALE: 1/2" = 1'-0"

SEE APPROVED CONFIGURATIONS ON SHEET 12 FOR ADDITIONAL 2-DEEP PANELS

FOR SIMPLIFICATION, ONLY FRAME & SASH PROJECTION LINES ARE SHOWN FOR THESE ELEVATIONS

PRODUCT REVISED
as complying with the Florida Building Code
Acceptance No. 11-1024.13
Expiration Date 11/26/15
By Ishaq J. Chaudhuri
Miami Dade Product Control

WARREN W. SCHAEFER ★ LICENSE No. 44135 ★ STATE OF FLORIDA ★ PROFESSIONAL ENGINEER

| DRAWN BY: W.R.M. | CHECKED BY: W.W.S. |
|---|---|
| PLOT: 1=24 | DATE: 04/04/09 |

| NO. | REVISION DESCRIPTION | BY | DATE |
|---|---|---|---|

DRAWING TITLE: LIFT & SLIDE BRONZE CLAD SLIDING GLASS IMPACT DOORS

MANUFACTURER: PEETZ WINDOWS & DOORS, 15951 S.W. 41ST STREET; SUITE 150, WESTON, FL 33331, 954-659-3887

CONSULTANTS: W. W. SCHAEFER ENGINEERING & CONSULTING, P.A. (CA 6809), 7480 150TH COURT NORTH, PALM BEACH GARDENS, FL 33418, PHONE: 561-744-3424

CERTIFICATION: OCT 19 2011 — WARREN W. SCHAEFER, P.E. P.E. NO. 44135

DRAWING NO. 1632 | REV. A

SHEET NO. 5 OF 31

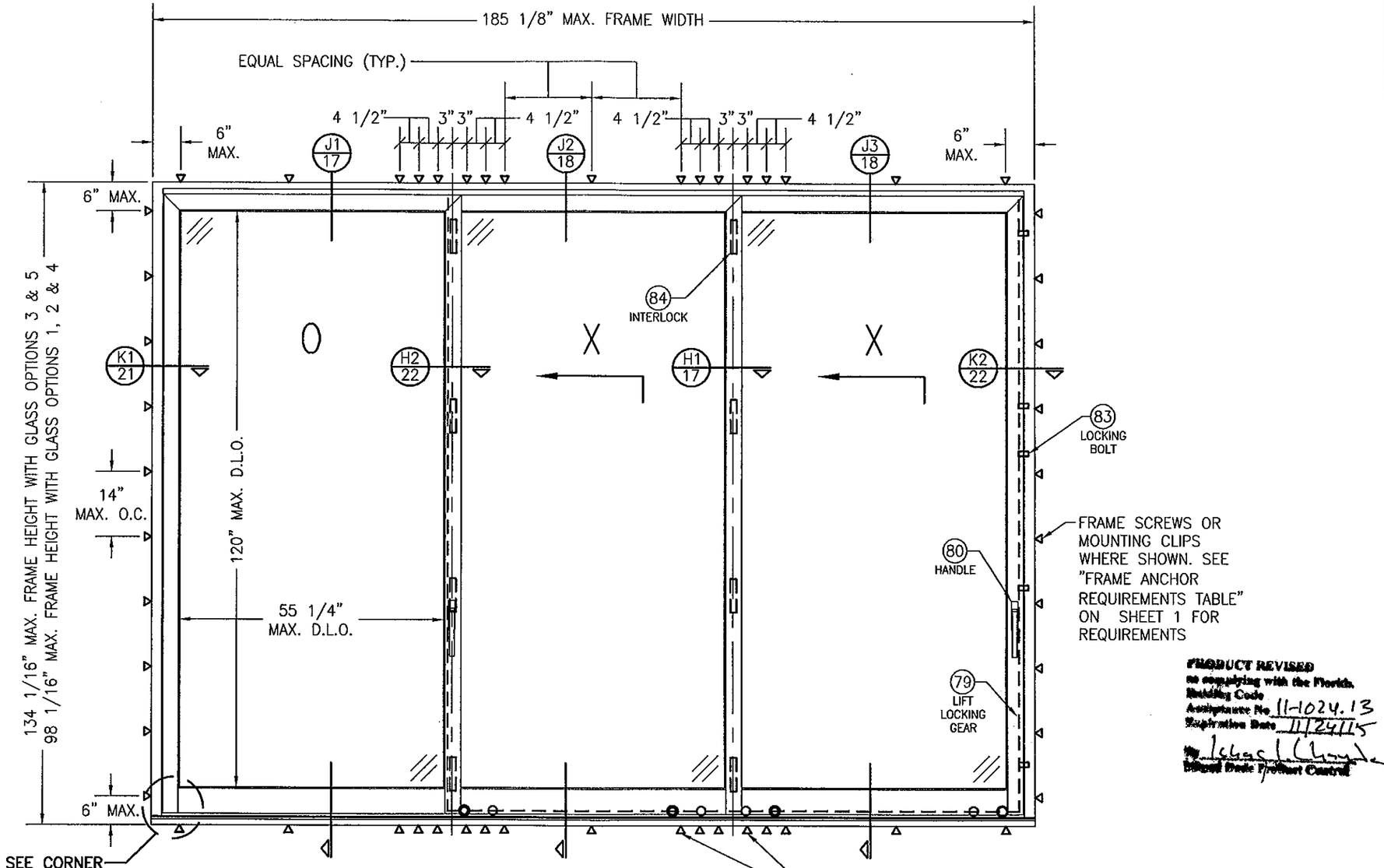


**PRODUCT REVISED**
**to complying with the Florida Building Code**
**Acceptance No.** 11-1024.13
**Expiration Date** 11/24/15
**By** [signature]
**Product Control**

## EXTERIOR ELEVATION:
## 3 PANEL DEEP OXX DOOR WITHOUT POCKETS

SCALE: 1/2" = 1'-0"

SEE APPROVED CONFIGURATIONS ON SHEET 12 FOR ADDITIONAL 3-DEEP PANELS

FOR SIMPLIFICATION, ONLY FRAME & SASH PROJECTION LINES ARE SHOWN FOR THESE ELEVATIONS

WARREN W. SCHAEFER LICENSE No. 44135 STATE OF FLORIDA PROFESSIONAL ENGINEER

OCT 19 2011

| DRAWN BY: W.R.W. | CHECKED BY: W.W.S. |
|---|---|
| PLOT: 1=24 | DATE: 04/04/09 |

| NO. | REVISION DESCRIPTION | BY | DATE |
|---|---|---|---|
| | | | |

DRAWING TITLE: LIFT & SLIDE BRONZE CLAD SLIDING GLASS IMPACT DOORS

MANUFACTURER: PEETZ WINDOWS & DOORS
15951 S.W. 41ST STREET; SUITE 150
WESTON, FL 33331
954-659-3887

CONSULTANTS: W. W. SCHAEFER ENGINEERING & CONSULTING, P.A. (CA 6809)
7480 150TH COURT NORTH
PALM BEACH GARDENS, FL 33418
PHONE: 561-744-3424

CERTIFICATION
WARREN W. SCHAEFER, P.E.
FLA. REG. NO. 44135

DRAWING NO. 1632 | REV. A
SHEET NO. 6 OF 31

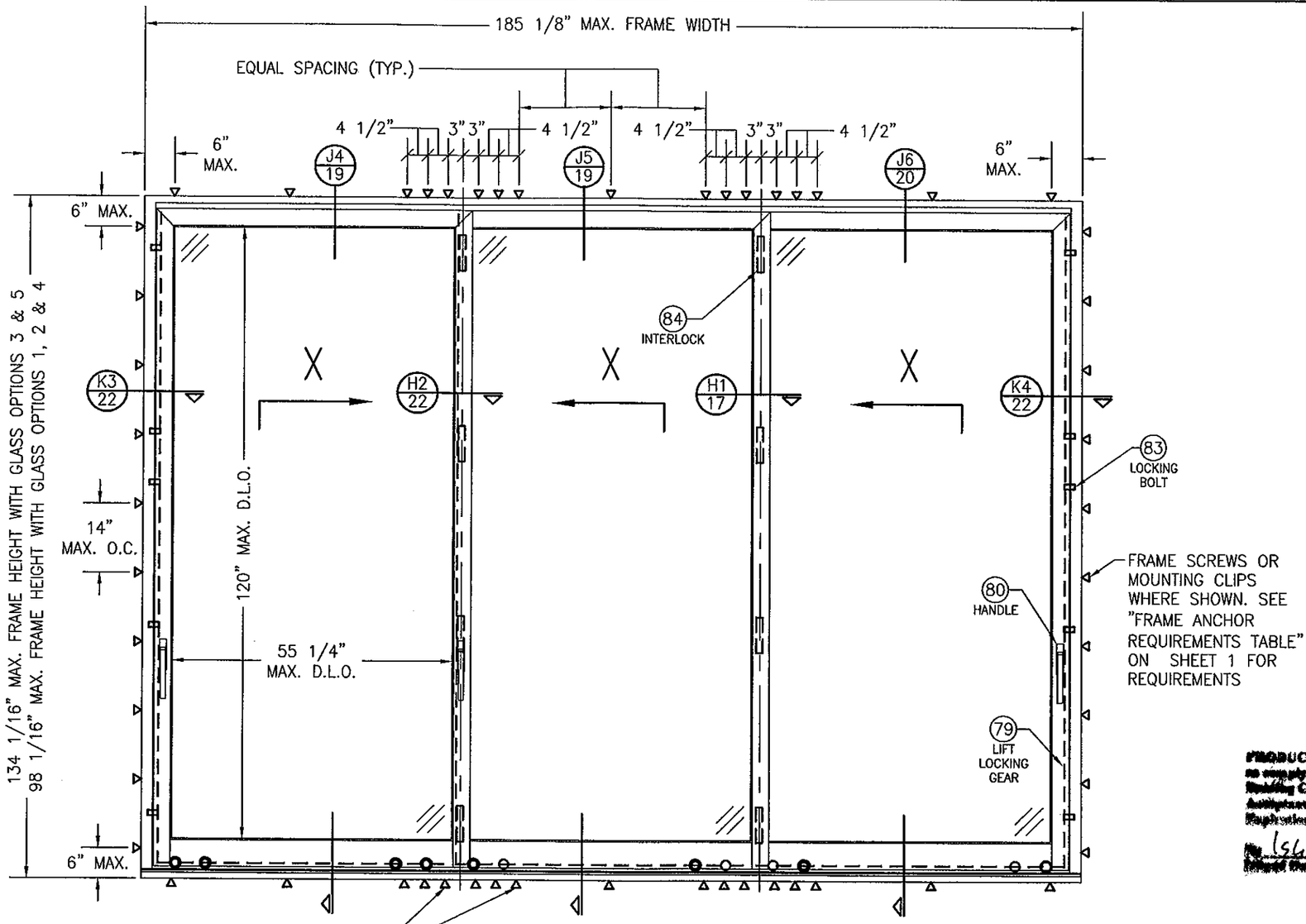


FRAME SCREWS OR MOUNTING CLIPS WHERE SHOWN AT MEETING STILE ENDS (4 ANCHORS REQ'D WHEN FRAME HEIGHT IS 100" OR LESS OR PANEL WIDTHS ARE 36" OR LESS; 6 ANCHORS REQ'D OTHERWISE). SEE "FRAME ANCHOR REQUIREMENTS TABLE" ON THIS SHEET FOR REQUIREMENTS.

## EXTERIOR ELEVATION; 3 PANEL DEEP XXX DOOR WITHOUT POCKETS

SCALE: 1/2" = 1'-0"

SEE APPROVED CONFIGURATIONS ON SHEET 12 FOR ADDITIONAL 3-DEEP PANELS

FOR SIMPLIFICATION, ONLY FRAME & SASH PROJECTION LINES ARE SHOWN FOR THESE ELEVATIONS

PRODUCT REVISED
as complying with the Florida Building Code
Acceptance No. 11-1024.13
Expiration Date 11/24/15
By Ishaq I. Chanda
Broward Dade Product Control

WARREN W. SCHAEFER ★ LICENSE No. 44135 ★ STATE OF FLORIDA ★ PROFESSIONAL ENGINEER

| DRAWN BY: W.R.M. | CHECKED BY: W.W.S. |
|---|---|
| PLOT: 1=24 | DATE: 04/04/09 |

| NO. | REVISION DESCRIPTION | BY | DATE |
|---|---|---|---|
| | | | |

DRAWING TITLE
LIFT & SLIDE BRONZE CLAD SLIDING GLASS IMPACT DOORS

MANUFACTURER
PEETZ WINDOWS & DOORS
15951 S.W. 41ST STREET; SUITE 150
WESTON, FL 33331
954-659-3887

CONSULTANTS
W. W. SCHAEFER ENGINEERING & CONSULTING, P.A. (CA 6809)
7480 150TH COURT NORTH
PALM BEACH GARDENS, FL 33418
PHONE: 561-744-3424

CERTIFICATION
OCT 19 2011
WARREN W. SCHAEFER, P.E.
P.E. NO. 44135

DRAWING NO. 1632 REV. A

SHEET NO. 7 OF 31

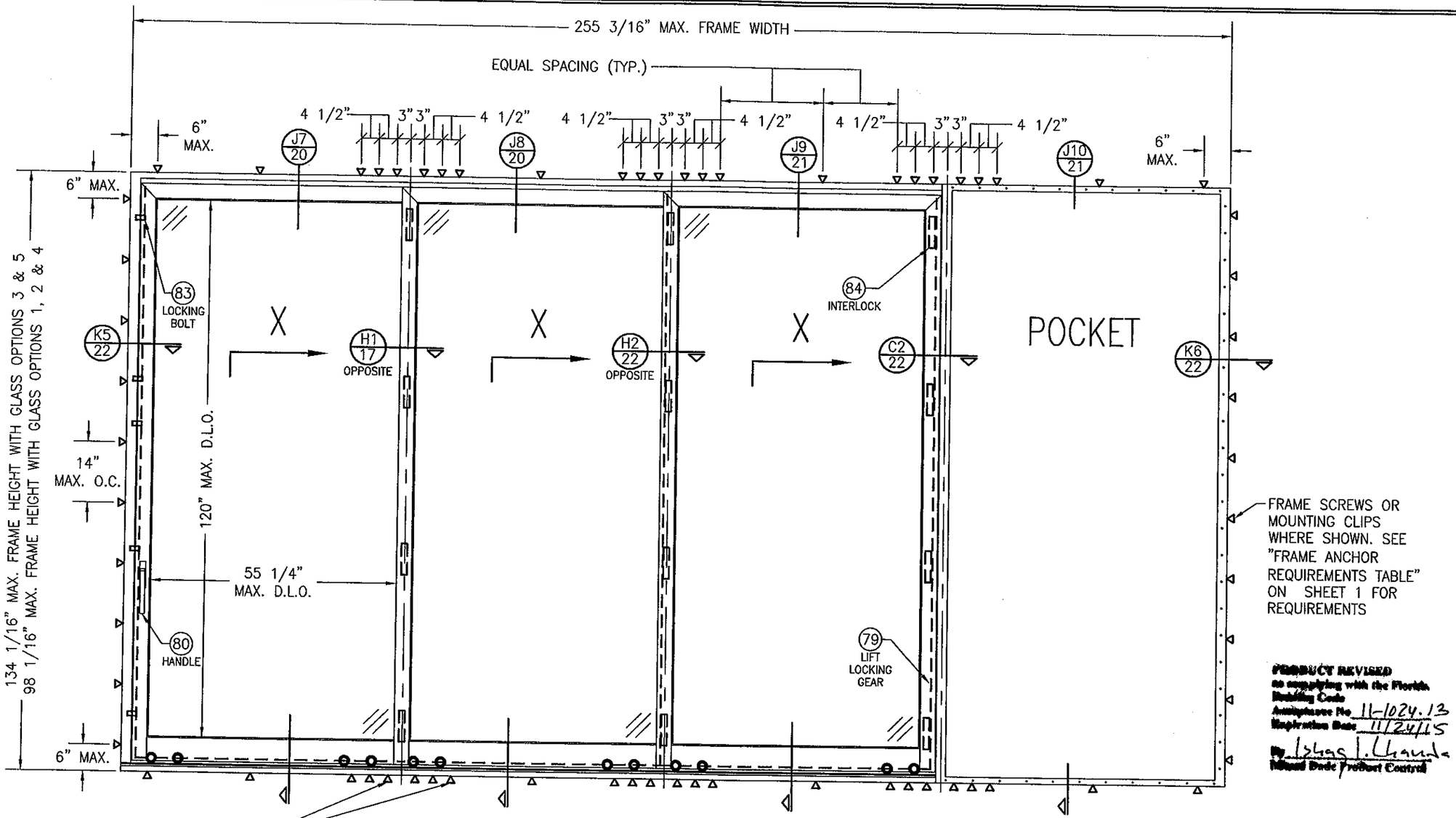


PRODUCT REVISED
as complying with the Florida Building Code
Application No. 11-1024.13
Expiration Date 11/24/15
By Isaac I. Chang
Miami-Dade Product Control

## EXTERIOR ELEVATION:
## 3 PANEL DEEP XXX DOOR WITH POCKET

SCALE: 1/2" = 1'-0"

SEE APPROVED CONFIGURATIONS ON SHEET 12 FOR ADDITIONAL 3-DEEP PANELS

FOR SIMPLIFICATION, ONLY FRAME & SASH PROJECTION LINES ARE SHOWN FOR THESE ELEVATIONS

WARREN W. SCHAEFER LICENSE No. 44135 STATE OF FLORIDA PROFESSIONAL ENGINEER

OCT 19 2011

WARREN W. SCHAEFER, P.E.
P.E. NO. 44135

| NO. | REVISION DESCRIPTION | BY | DATE |
|---|---|---|---|
| | | | |

DRAWN BY: W.R.M. | CHECKED BY: W.W.S.
PLOT: 1=24 | DATE: 04/04/09

DRAWING TITLE
LIFT & SLIDE BRONZE CLAD SLIDING GLASS IMPACT DOORS

MANUFACTURER
PEETZ WINDOWS & DOORS
15951 S.W. 41ST STREET; SUITE 150
WESTON, FL 33331
954-659-3887

CONSULTANTS
W. W. SCHAEFER ENGINEERING & CONSULTING, P.A. (CA 6809)
7480 150TH COURT NORTH
PALM BEACH GARDENS, FL 33418
PHONE: 561-744-3424

CERTIFICATION

DRAWING NO. 1632 | REV. A
SHEET NO. 8 OF 31

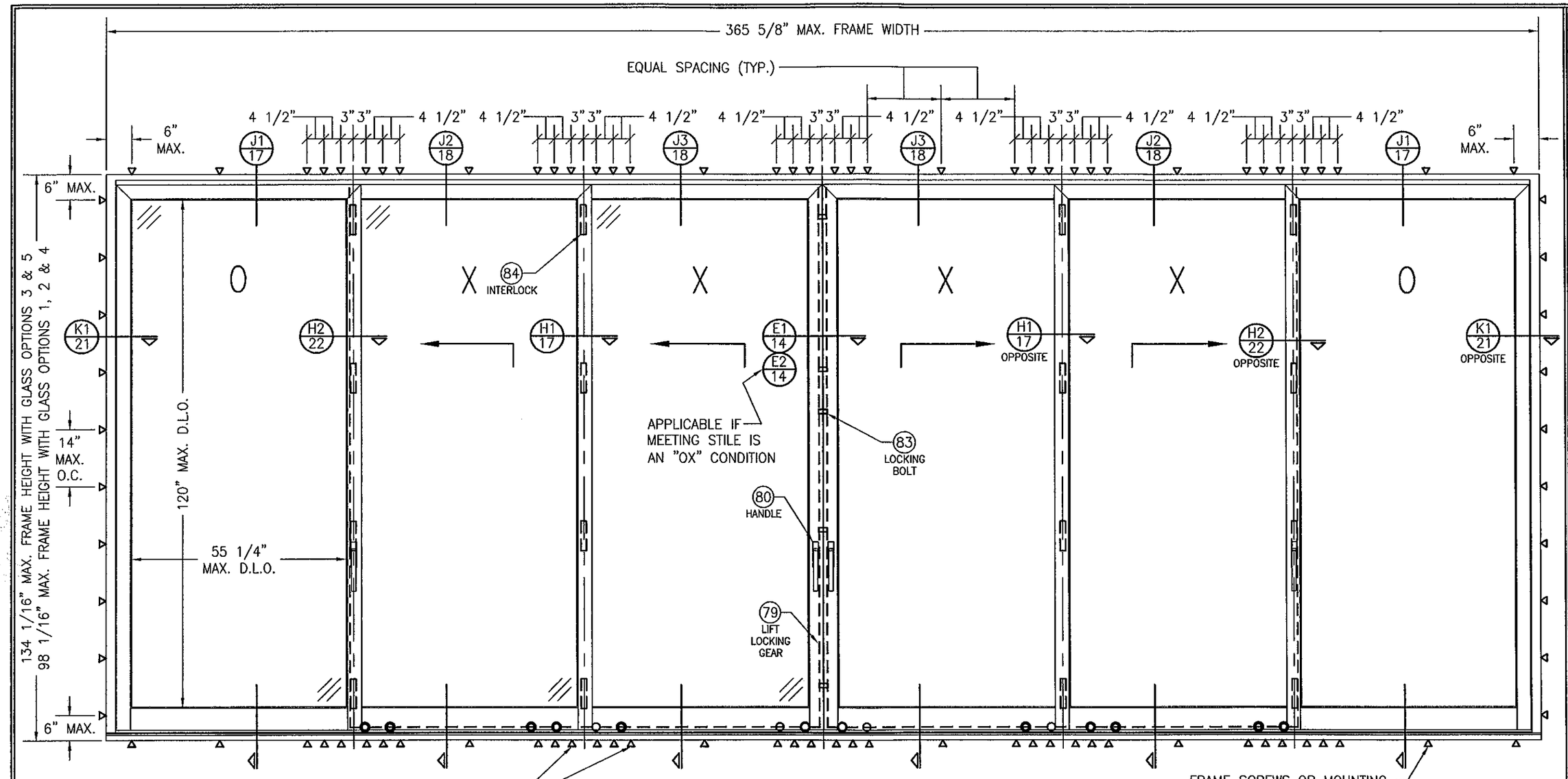


FRAME SCREWS OR MOUNTING CLIPS WHERE SHOWN AT MEETING STILE ENDS (4 ANCHORS REQ'D WHEN FRAME HEIGHT IS 100" OR LESS OR PANEL WIDTHS ARE 36" OR LESS; 6 ANCHORS REQ'D OTHERWISE). SEE "FRAME ANCHOR REQUIREMENTS TABLE" ON THIS SHEET FOR REQUIREMENTS.

FRAME SCREWS OR MOUNTING CLIPS WHERE SHOWN. SEE "FRAME ANCHOR REQUIREMENTS TABLE" ON SHEET 1 FOR REQUIREMENTS

## EXTERIOR ELEVATION:
## 3 PANEL DEEP OXX-XXO DOOR WITHOUT POCKETS

SCALE: N.T.S.

SEE APPROVED CONFIGURATIONS ON SHEET 12 FOR ADDITIONAL 3-DEEP PANELS

FOR SIMPLIFICATION, ONLY FRAME & SASH PROJECTION LINES ARE SHOWN FOR THESE ELEVATIONS

PRODUCT REVISED to complying with the Florida Building Code Acceptance No. 11-1024.13 Expiration Date 11/24/15 By Ishaq I. Chanda Miami-Dade Product Control

WARREN W. SCHAEFER LICENSE No. 44135 STATE OF FLORIDA PROFESSIONAL ENGINEER

OCT 19 2011

WARREN W. SCHAEFER, P.E. P.E. NO. 44135

| DRAWN BY: W.R.M. | CHECKED BY: W.W.S. |
|---|---|
| PLOT: 1=24 | DATE: 04/04/09 |

| NO. | REVISION DESCRIPTION | BY | DATE |
|---|---|---|---|
| | | | |

DRAWING TITLE: LIFT & SLIDE BRONZE CLAD SLIDING GLASS IMPACT DOORS

MANUFACTURER: PEETZ WINDOWS & DOORS, 15951 S.W. 41ST STREET, SUITE 150, WESTON, FL 33331, 954-659-3887

CONSULTANTS: W. W. SCHAEFER ENGINEERING & CONSULTING, P.A. (CA 6809), 7480 150TH COURT NORTH, PALM BEACH GARDENS, FL 33418, PHONE: 561-744-3424

CERTIFICATION

DRAWING NO. 1632 | REV. A

SHEET NO. 9 OF 31

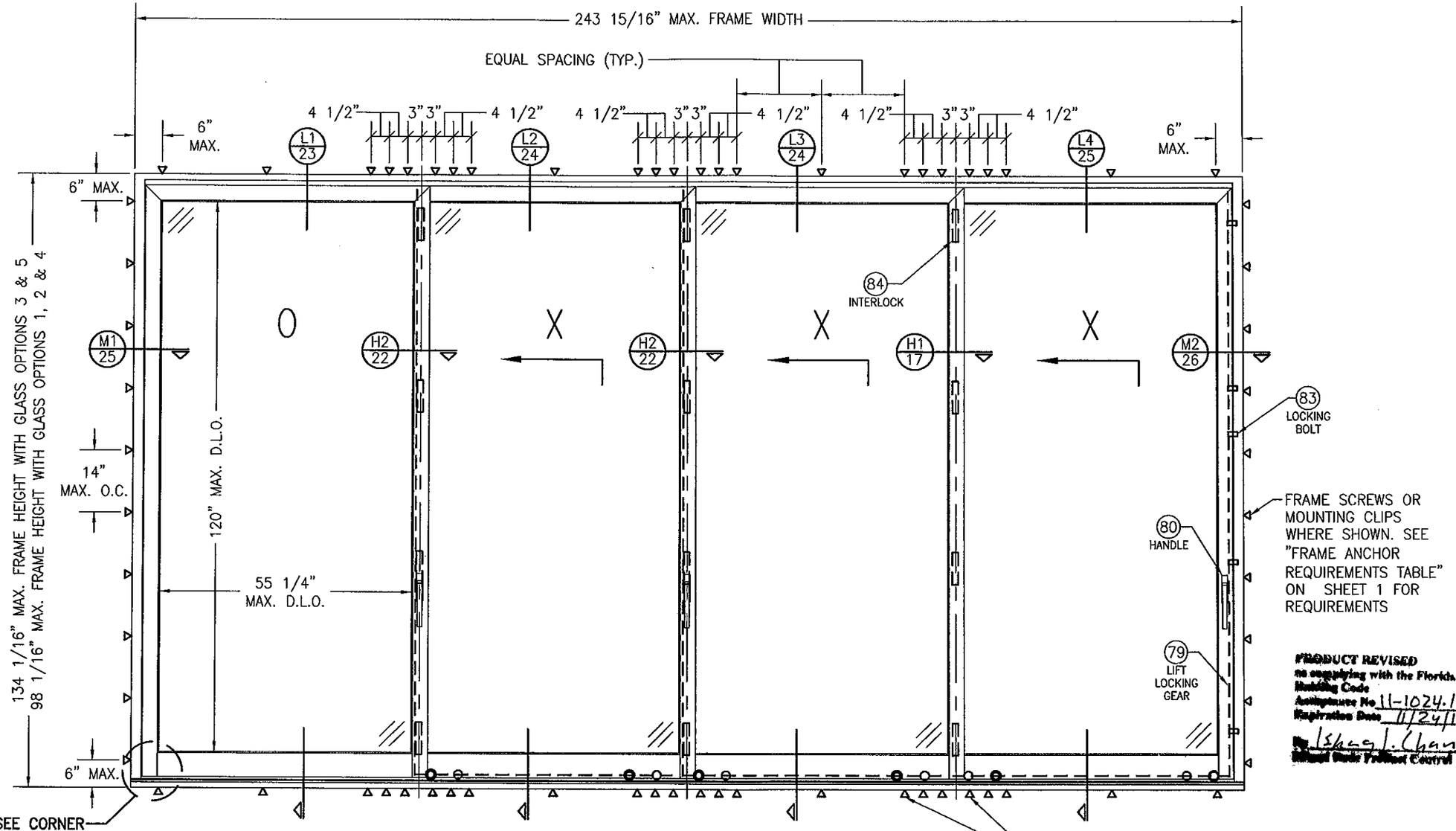


PRODUCT REVISED
to complying with the Florida Building Code
Acceptance No. 11-1024.13
Expiration Date 11/24/15

## EXTERIOR ELEVATION:
## 4 PANEL DEEP OXXX DOOR

SCALE: 1/2" = 1'-0"

SEE APPROVED CONFIGURATIONS ON SHEET 12 FOR ADDITIONAL 4-DEEP PANELS

FOR SIMPLIFICATION, ONLY FRAME & SASH PROJECTION LINES ARE SHOWN FOR THESE ELEVATIONS

WARREN W. SCHAEFER LICENSE No. 44135 STATE OF FLORIDA PROFESSIONAL ENGINEER

OCT 19 2011

| | |
|---|---|
| DRAWN BY: W.R.M. | CHECKED BY: W.W.S. |
| PLOT: 1=24 | DATE: 04/04/09 |

| NO. | REVISION DESCRIPTION | BY | DATE |
|---|---|---|---|

DRAWING TITLE
LIFT & SLIDE BRONZE CLAD SLIDING GLASS IMPACT DOORS

MANUFACTURER
PEETZ WINDOWS & DOORS
15951 S.W. 41ST STREET; SUITE 150
WESTON, FL 33331
954-659-3887

CONSULTANTS
W. W. SCHAEFER ENGINEERING & CONSULTING, P.A. (CA 6809)
7480 150TH COURT NORTH
PALM BEACH GARDENS, FL 33418
PHONE: 561-744-3424

CERTIFICATION
WARREN W. SCHAEFER, P.E.
P.E. NO. 44135

DRAWING NO. 1632 | REV. A

SHEET NO. 10 OF 31

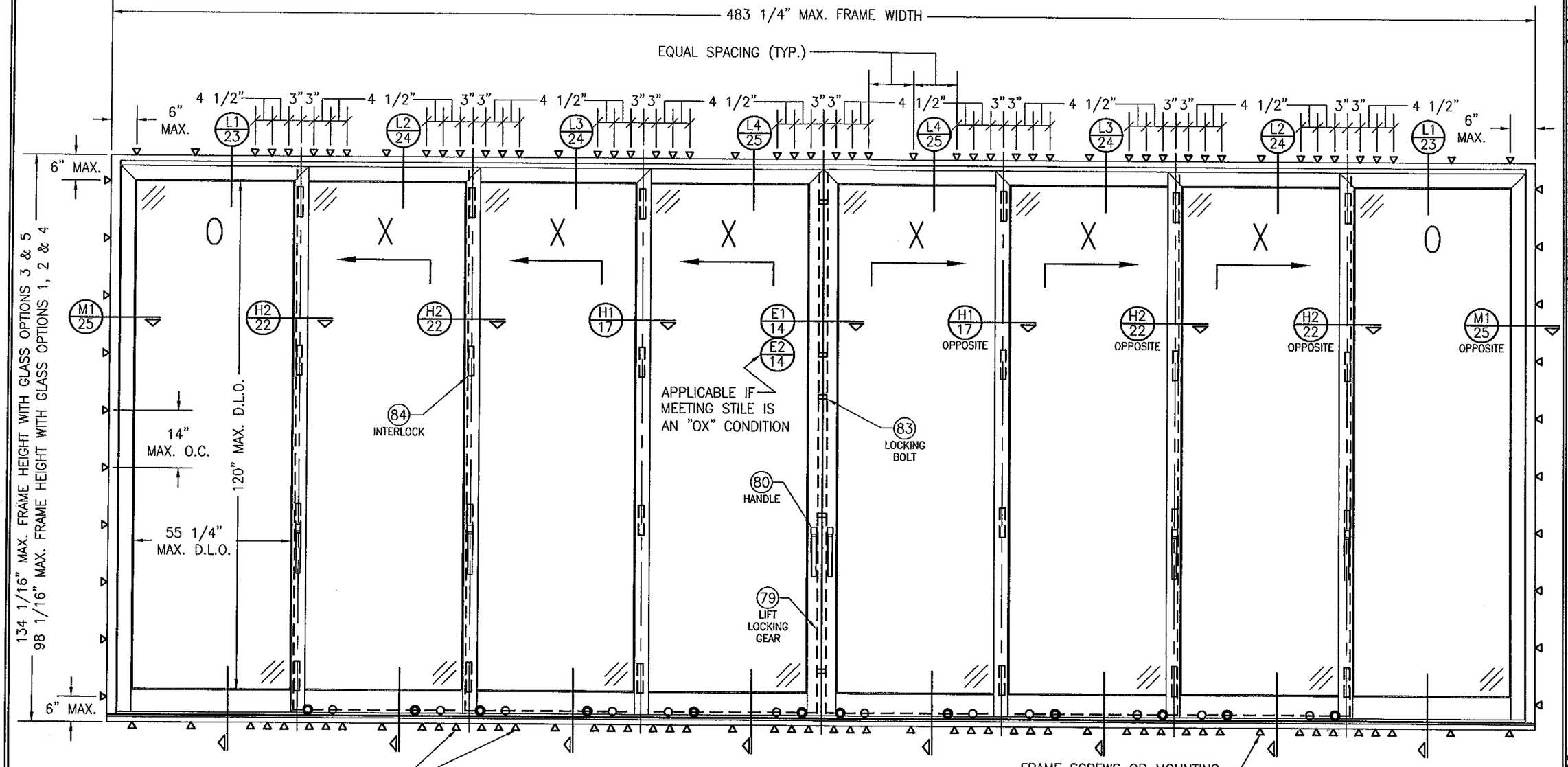


FRAME SCREWS OR MOUNTING CLIPS WHERE SHOWN AT MEETING STILE ENDS (4 ANCHORS REQ'D WHEN FRAME HEIGHT IS 100" OR LESS OR PANEL WIDTHS ARE 36" OR LESS; 6 ANCHORS REQ'D OTHERWISE). SEE "FRAME ANCHOR REQUIREMENTS TABLE" ON THIS SHEET FOR REQUIREMENTS.

## EXTERIOR ELEVATION:
## 4 PANEL DEEP OXXX-XXXO DOOR

SCALE: N.T.S.

SEE APPROVED CONFIGURATIONS ON SHEET 12 FOR ADDITIONAL 4-DEEP PANELS

FRAME SCREWS OR MOUNTING CLIPS WHERE SHOWN. SEE "FRAME ANCHOR REQUIREMENTS TABLE" ON SHEET 1 FOR REQUIREMENTS

FOR SIMPLIFICATION, ONLY FRAME & SASH PROJECTION LINES ARE SHOWN FOR THESE ELEVATIONS

PRODUCT REVISED as complying with the Florida Building Code Application No. 11-1024.13 Expiration Date 11/24/15 By: Ishaq I. Chanda Miami-Dade Product Control

WARREN W. SCHAEFER LICENSE No. 44135 STATE OF FLORIDA PROFESSIONAL ENGINEER

OCT 19 2011

| NO. | REVISION DESCRIPTION | BY | DATE |
|---|---|---|---|
| | | | |

DRAWN BY: W.R.M. | CHECKED BY: W.W.S.
PLOT: 1=24 | DATE: 04/04/09

DRAWING TITLE: LIFT & SLIDE BRONZE CLAD SLIDING GLASS IMPACT DOORS

MANUFACTURER: PEETZ WINDOWS & DOORS, 15951 S.W. 41ST STREET; SUITE 150, WESTON, FL 33331, 954-659-3887

CONSULTANTS: W. W. SCHAEFER ENGINEERING & CONSULTING, P.A. (CA 6809), 7480 150TH COURT NORTH, PALM BEACH GARDENS, FL 33418, PHONE: 561-744-3424

CERTIFICATION: WARREN W. SCHAEFER, P.E., P.E. NO. 44135

DRAWING NO. 1632 | REV. A

SHEET NO. 11 OF 31

# APPROVED CONFIGURATIONS

## CONFIGURATIONS WITHOUT POCKETS

### 2-PANEL DEEP CONDITIONS

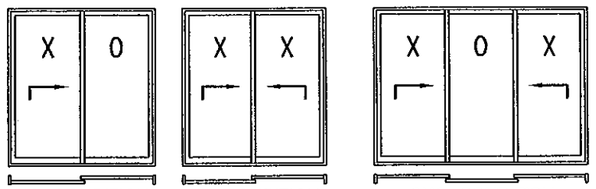


### 3-PANEL DEEP CONDITIONS

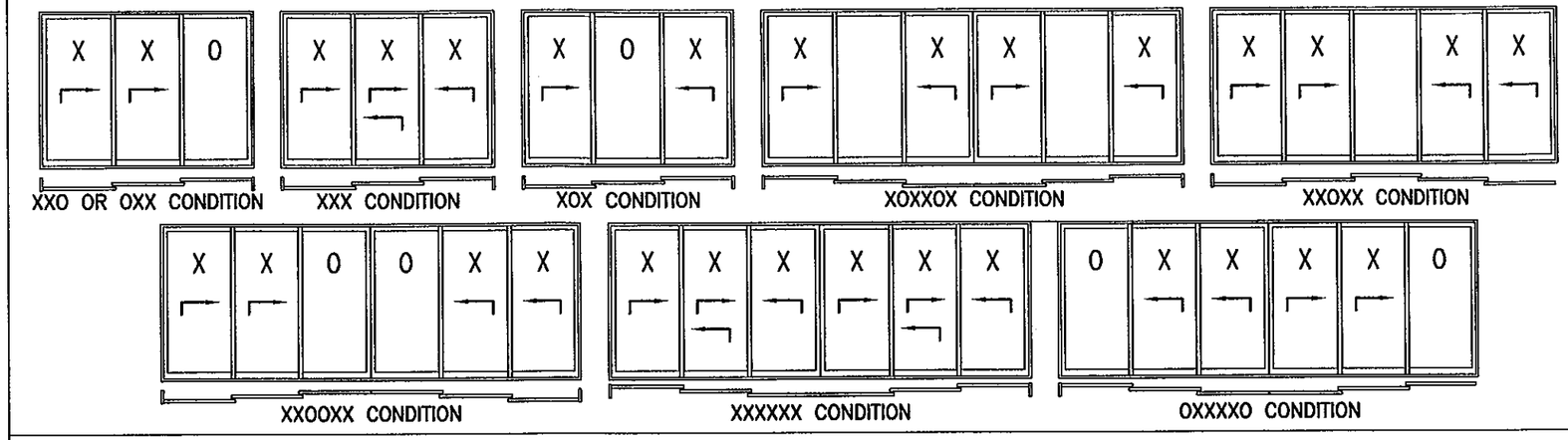


### 4-PANEL DEEP CONDITIONS

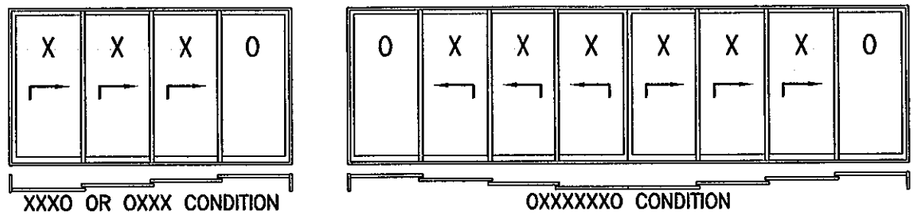


**PRODUCT REVISED**
**as complying with the Florida Building Code**
**Acceptance No. 11-1024.13**
**Expiration Date 11/24/15**
**By: Shuaib Chowdhury**
**Product Control**

## CONFIGURATIONS WITH POCKETS

### 1-PANEL DEEP CONDITIONS

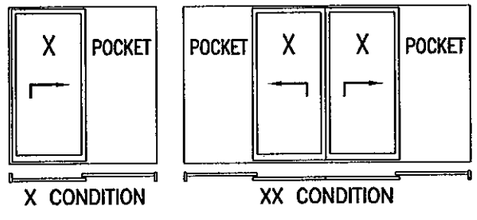


### 2-PANEL DEEP CONDITIONS

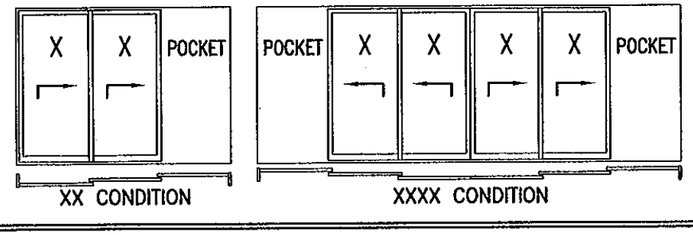


### 3-PANEL DEEP CONDITIONS

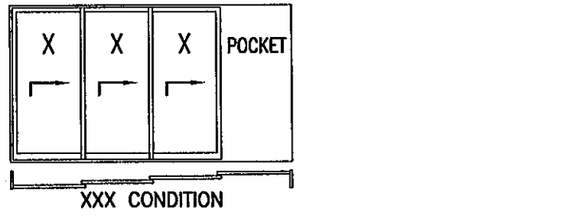


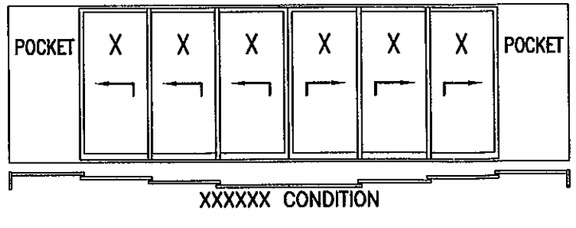


CONDITIONS SHOWN ARE THE MAJORITY OF THOSE USED. OTHER CONDITIONS OF "O" & "X" PANELS APPLY PROVIDING THEY ARE WITHIN THE SCOPE OF THE DETAILS WITHIN THIS DRAWING

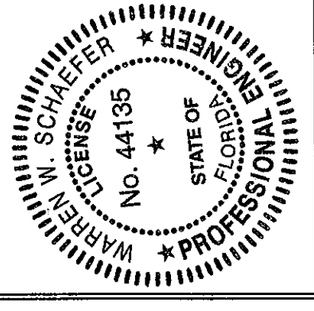


| NO. | REVISION DESCRIPTION | BY | DATE |
|---|---|---|---|
| | | | |

DRAWN BY: W.R.M. | CHECKED BY: W.W.S.
PLOT: 1=24 | DATE: 04/04/09

DRAWING TITLE
LIFT & SLIDE BRONZE CLAD SLIDING GLASS IMPACT DOORS

MANUFACTURER
PEETZ WINDOWS & DOORS
15951 S.W. 41ST STREET; SUITE 150
WESTON, FL 33331
954-659-3887

CONSULTANTS
W. W. SCHAEFER ENGINEERING & CONSULTING, P.A. (CA 6809)
7480 150TH COURT NORTH
PALM BEACH GARDENS, FL 33418
PHONE: 561-744-3424

CERTIFICATION
OCT 19 2011
WARREN W. SCHAEFER P.E. No. 44135

DRAWING NO. 1632 | REV. A
SHEET NO. 12 OF 31

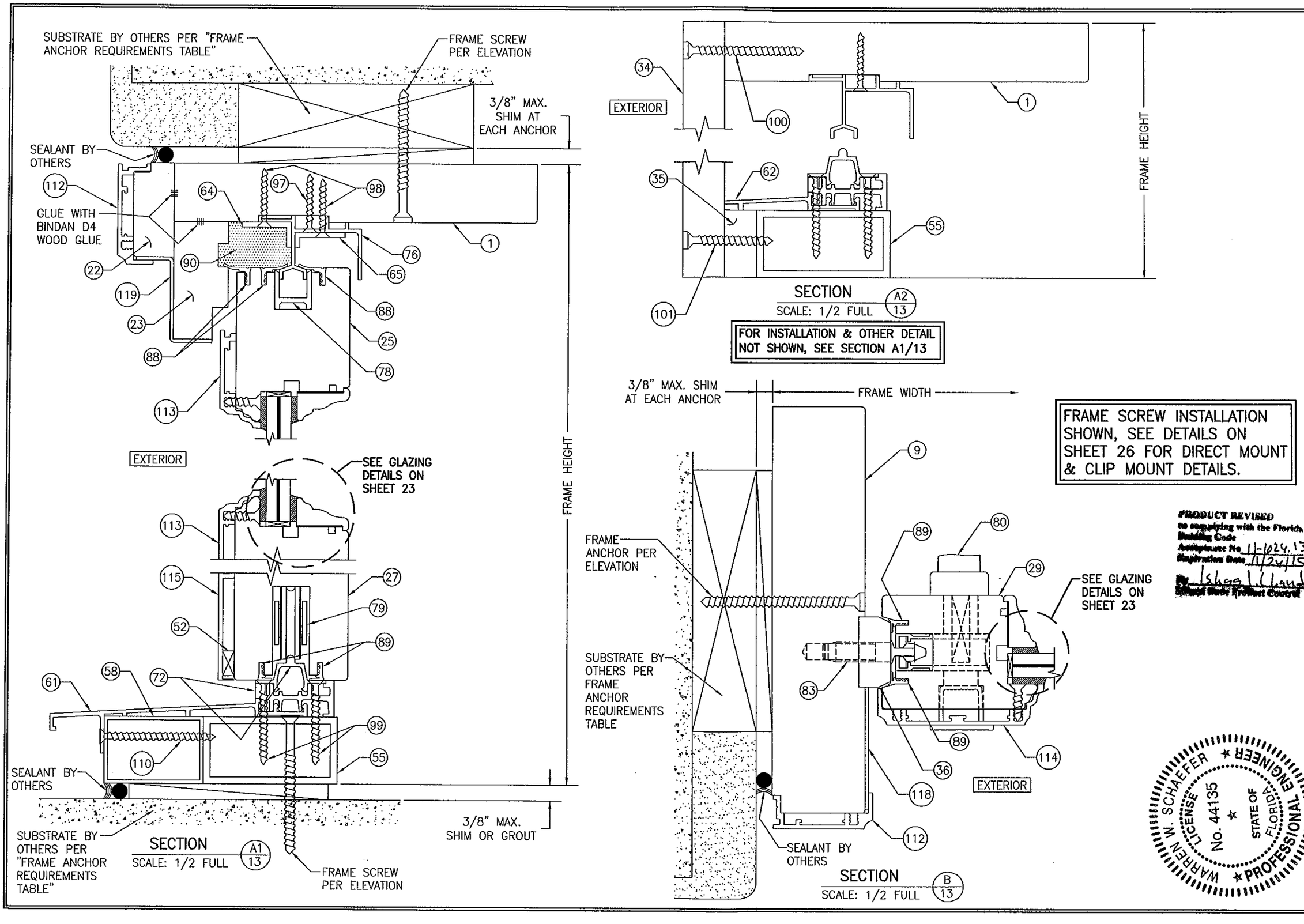


FRAME SCREW INSTALLATION SHOWN, SEE DETAILS ON SHEET 26 FOR DIRECT MOUNT & CLIP MOUNT DETAILS.

PRODUCT REVISED
as complying with the Florida Building Code
Acceptance No. 11-1024.13
Expiration Date 11/24/15
By Ishaq L. Chand
Miami Dade Product Control

WARREN W. SCHAEFER ★ LICENSE No. 44135 ★ STATE OF FLORIDA ★ PROFESSIONAL ENGINEER

| DRAWN BY: W.R.M. | CHECKED BY: W.W.S. |
|---|---|
| PLOT: 1=24 | DATE: 01/23/09 |

| NO. | REVISION DESCRIPTION | BY | DATE |
|---|---|---|---|

DRAWING TITLE
LIFT & SLIDE BRONZE CLAD SLIDING GLASS IMPACT DOORS

MANUFACTURER
PEETZ WINDOWS & DOORS
15951 S.W. 41ST STREET; SUITE 150
WESTON, FL 33331
954-659-3887

CONSULTANTS
W. W. SCHAEFER ENGINEERING & CONSULTING, P.A. (CA 6809)
7480 150TH COURT NORTH
PALM BEACH GARDENS, FL 33418
PHONE: 561-744-3424

CERTIFICATION
OCT 19 2011
WARREN W. SCHAEFER, P.E.
P.E. NO. 44135

DRAWING NO. 1632 REV. A
SHEET NO. 13 OF 31

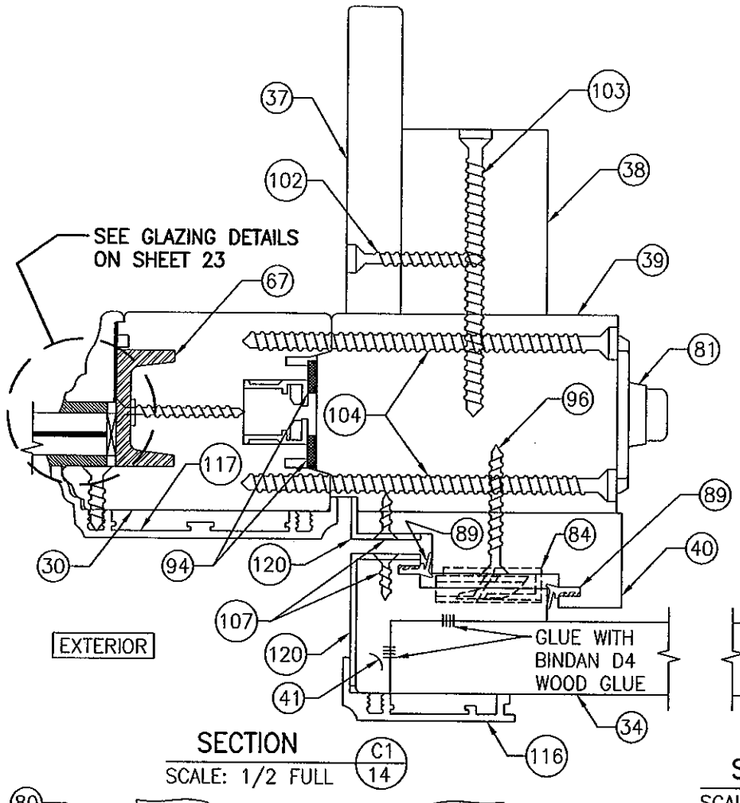


SECTION C1/14
SCALE: 1/2 FULL

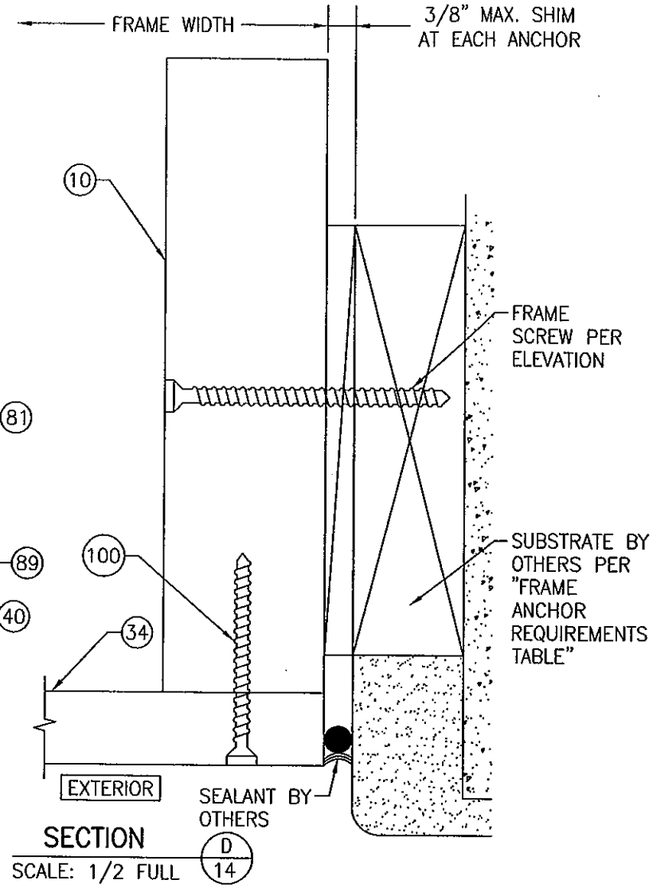


SECTION D/14
SCALE: 1/2 FULL

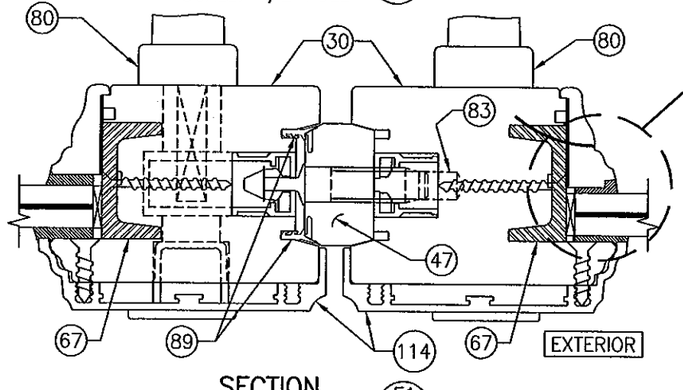


SECTION E1/14
SCALE: 1/2 FULL

(APPLICABLE WITH "XX" MEETING STILE CONDITIONS)

FRAME SCREW INSTALLATION SHOWN, SEE DETAILS ON SHEET 26 FOR DIRECT MOUNT & CLIP MOUNT DETAILS.

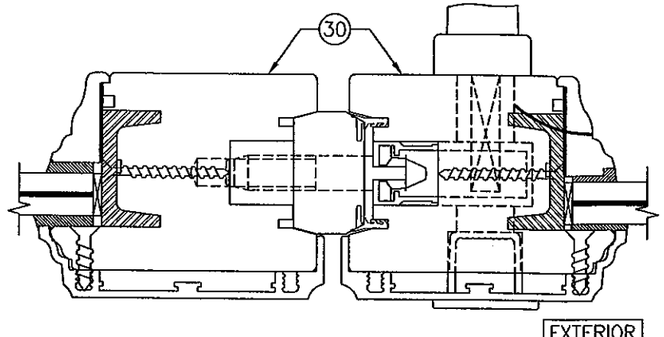


SECTION E2/14
SCALE: 1/2 FULL

(APPLICABLE WITH "OX" MEETING STILE CONDITIONS)
(FOR DETAIL NOT SHOWN, SEE SECTION E1/14)

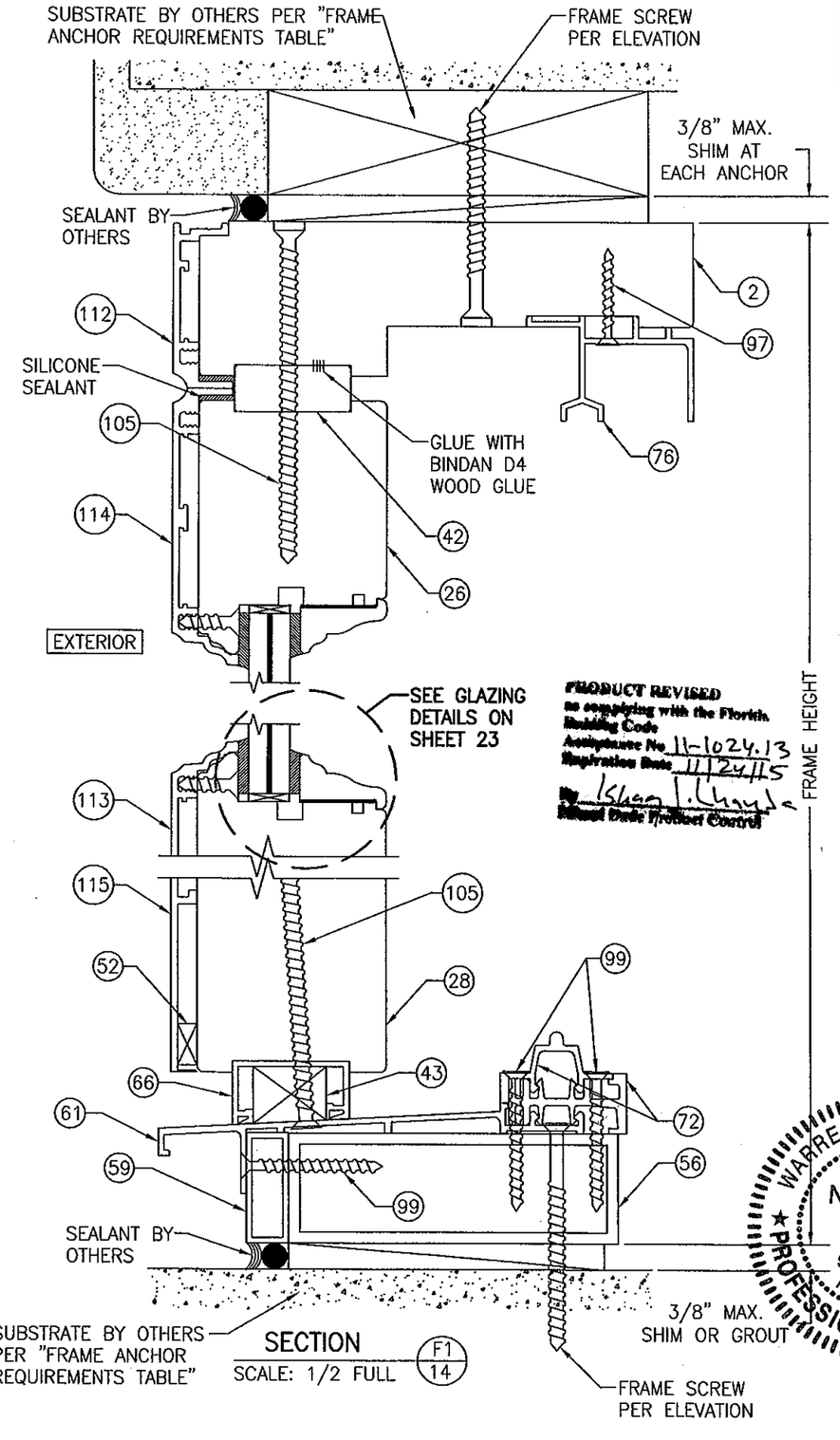


SECTION F1/14
SCALE: 1/2 FULL

| DRAWN BY: W.R.M. | CHECKED BY: W.W.S. |
|---|---|
| PLOT: 1=24 | DATE: 01/23/09 |

| NO. | REVISION DESCRIPTION | BY | DATE |
|---|---|---|---|
| | | | |

DRAWING TITLE
LIFT & SLIDE BRONZE CLAD SLIDING GLASS IMPACT DOORS

MANUFACTURER
PEETZ WINDOWS & DOORS
15951 S.W. 41ST STREET; SUITE 150
WESTON, FL 33331
954-659-3887

CONSULTANTS
W. SCHAEFER ENGINEERING & CONSULTING, P.A. (CA 6809)
7480 150TH COURT NORTH
PALM BEACH GARDENS, FL 33418
PHONE: 561-744-3424

CERTIFICATION
W. SCHAEFER
LICENSE
No. 44131
STATE OF FLORIDA
PROFESSIONAL ENGINEER
WARREN M. SCHAEFER

DRAWING NO. 1632
REV. A
SHEET NO. 14 OF 31

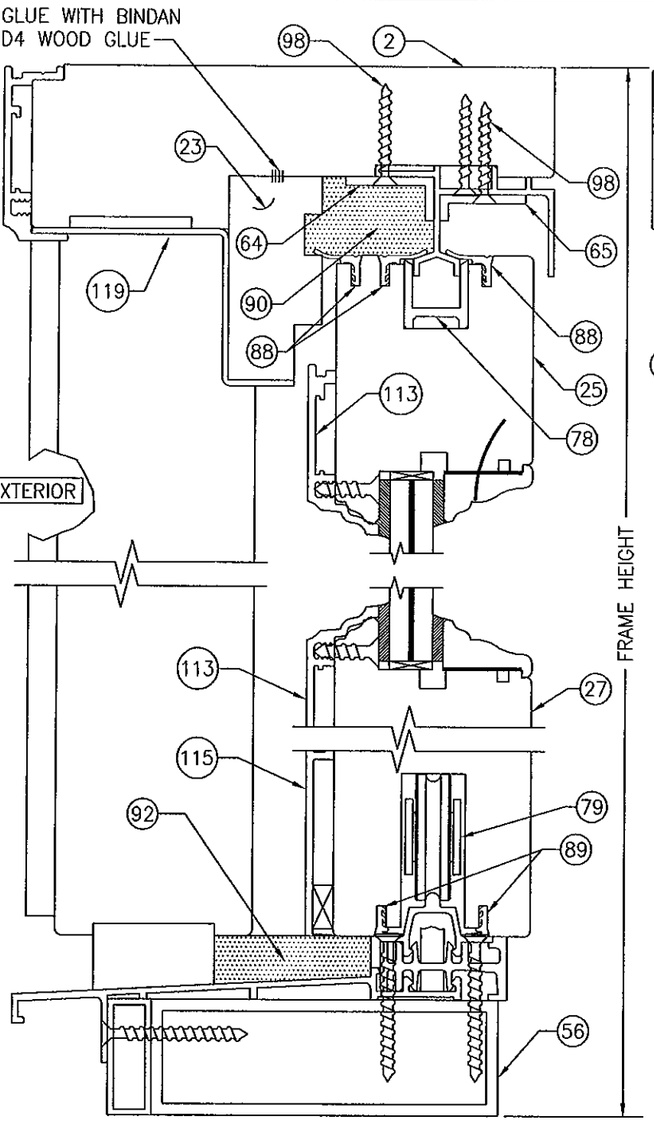


SECTION F2/15
SCALE: 1/2 FULL

FOR INSTALLATION & OTHER DETAIL NOT SHOWN, SEE SECTION F1/14

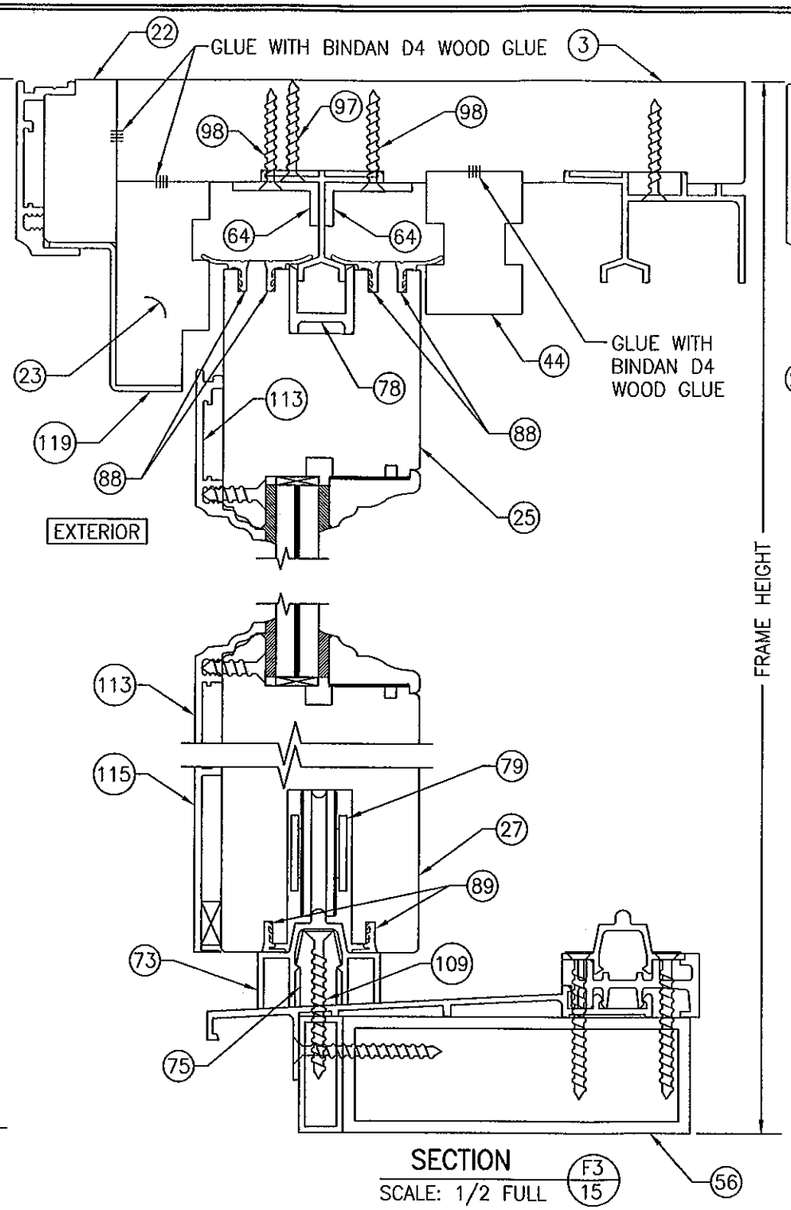


SECTION F3/15
SCALE: 1/2 FULL

FOR INSTALLATION & OTHER DETAIL NOT SHOWN, SEE SECTION F1/14

PRODUCT REVISED
as complying with the Florida Building Code
Acceptance No. 11-1024.13
Expiration Date 11/24/15
Miami-Dade Product Control

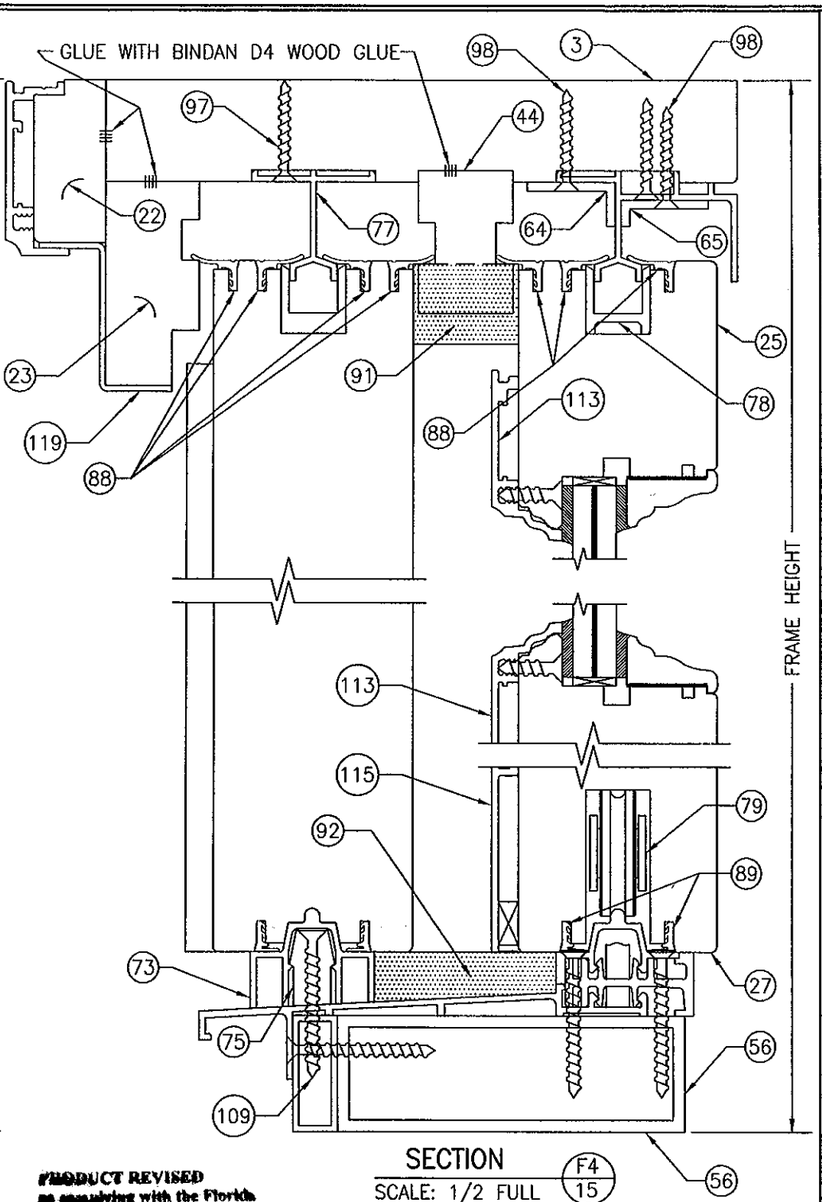


SECTION F4/15
SCALE: 1/2 FULL

FOR INSTALLATION & OTHER DETAIL NOT SHOWN, SEE SECTION F1/14

FRAME SCREW INSTALLATION SHOWN, SEE DETAILS ON SHEET 26 FOR DIRECT MOUNT & CLIP MOUNT DETAILS.

DRAWN BY: W.R.M. | CHECKED BY: W.W.S.
PLOT: 1=24 | DATE: 01/23/09

| NO. | REVISION DESCRIPTION | BY | DATE |
|---|---|---|---|

DRAWING TITLE
LIFT & SLIDE BRONZE CLAD SLIDING GLASS IMPACT DOORS

MANUFACTURER
PEETZ WINDOWS & DOORS
15951 S.W. 41ST STREET; SUITE 150
WESTON, FL 33331
954-659-3887

CONSULTANTS
W. W. SCHAEFER ENGINEERING & CONSULTING, P.A. (CA 6809)
7480 150TH COURT NORTH
PALM BEACH GARDENS, FL 33418
PHONE: 561-744-3424

CERTIFICATION
OCT 19 2011
WARREN W. SCHAEFER P.E.
P.E. NO. 44135

WARREN W. SCHAEFER LICENSE No. 44135 STATE OF FLORIDA PROFESSIONAL ENGINEER

DRAWING NO. 1632 | REV. A
SHEET NO. 15 OF 31

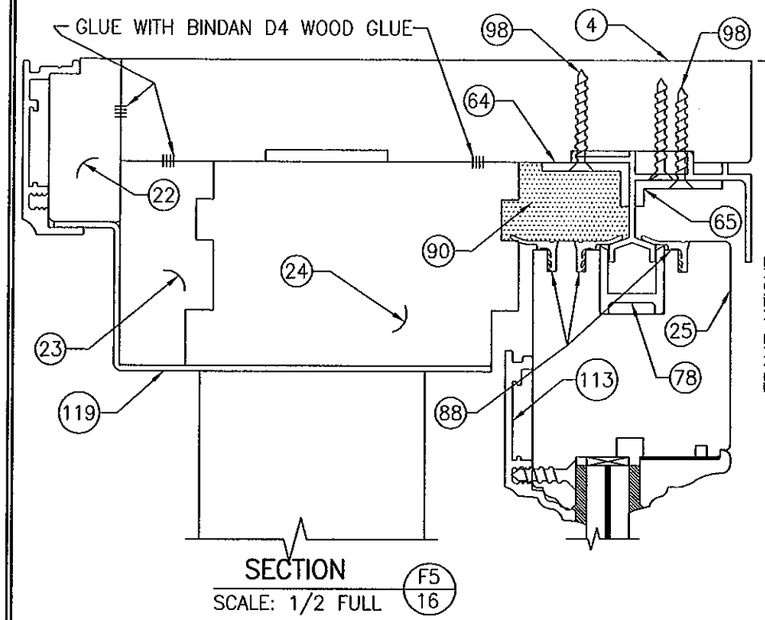


SECTION
SCALE: 1/2 FULL (F5 / 16)

(FOR SILL NOT SHOWN, SEE SECTION F4/15)

FOR INSTALLATION & OTHER DETAIL NOT SHOWN, SEE SECTION F1/14

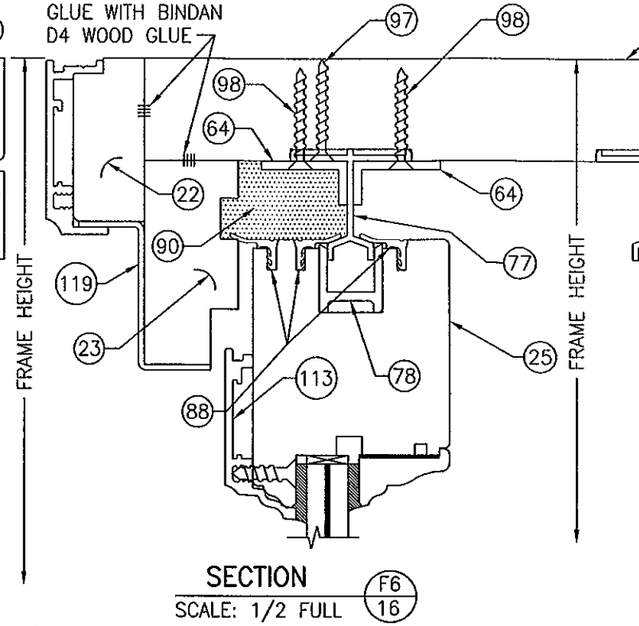


SECTION
SCALE: 1/2 FULL (F6 / 16)

(FOR SILL DETAIL NOT SHOWN, SEE SECTION F3/15)

FOR INSTALLATION & OTHER DETAIL NOT SHOWN, SEE SECTION F1/14

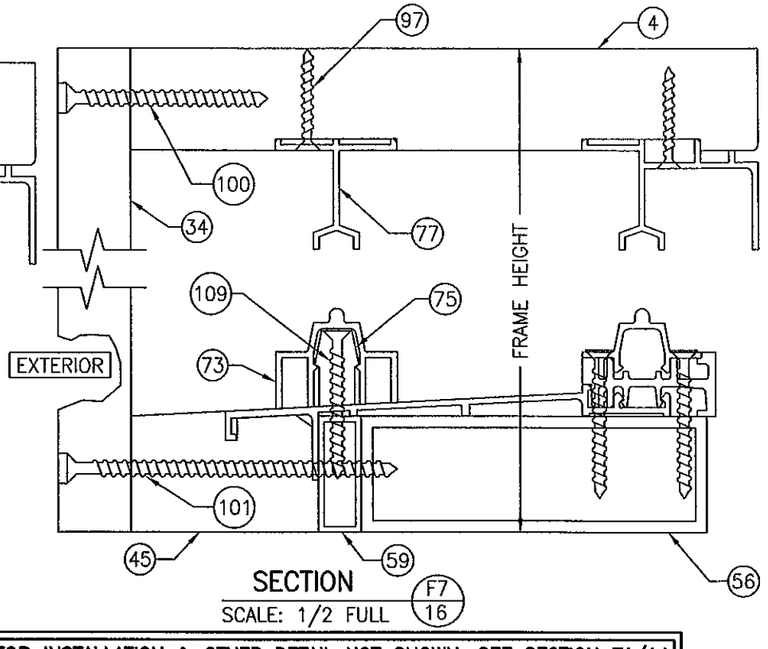


SECTION
SCALE: 1/2 FULL (F7 / 16)

FOR INSTALLATION & OTHER DETAIL NOT SHOWN, SEE SECTION F1/14

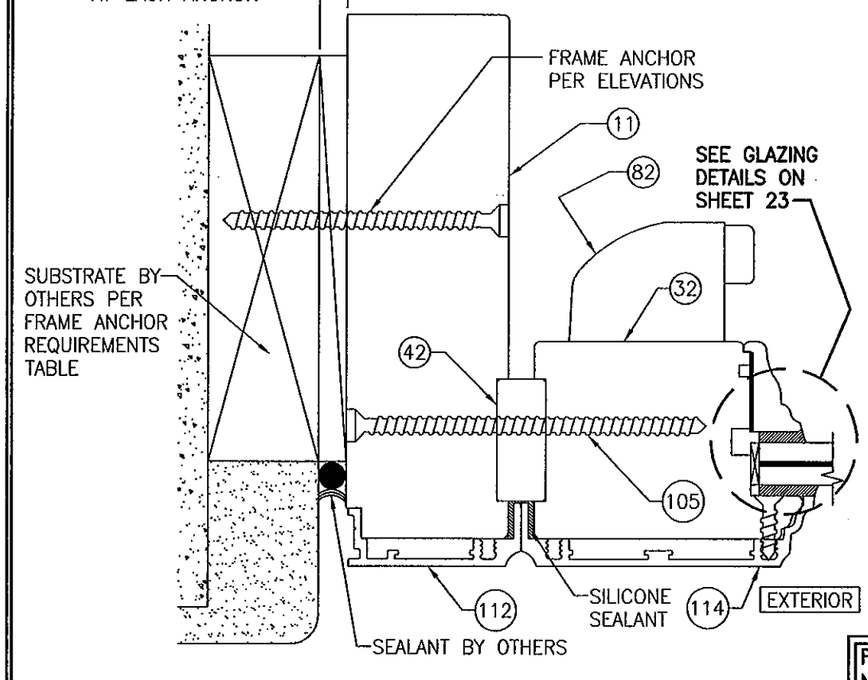


SECTION
SCALE: 1/2 FULL (G1 / 16)

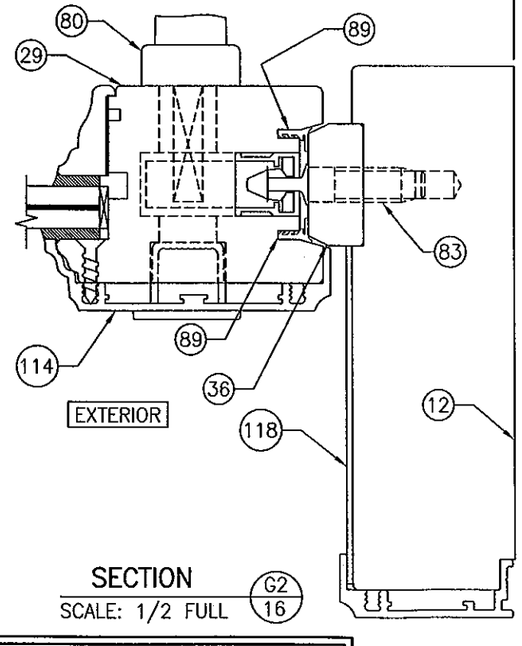


SECTION
SCALE: 1/2 FULL (G2 / 16)

FOR INSTALLATION & OTHER DETAIL NOT SHOWN, SEE SECTION G1/16

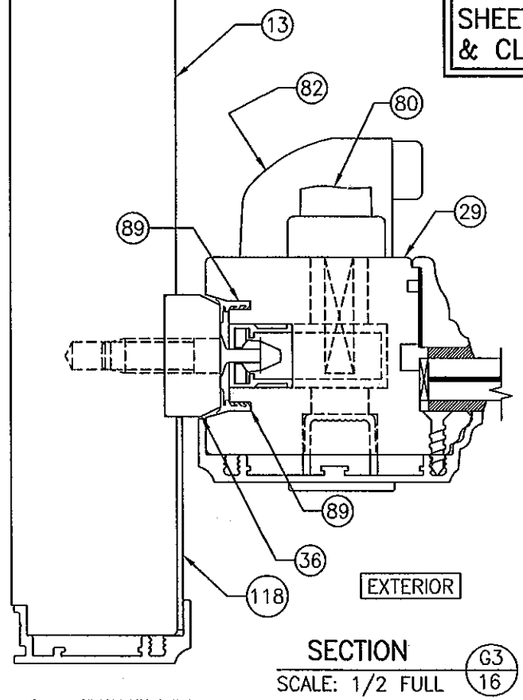


SECTION
SCALE: 1/2 FULL (G3 / 16)

FOR INSTALLATION & OTHER DETAIL NOT SHOWN, SEE SECTION G1/16

FRAME SCREW INSTALLATION SHOWN, SEE DETAILS ON SHEET 26 FOR DIRECT MOUNT & CLIP MOUNT DETAILS.

PRODUCT REVISED
to complying with the Florida Building Code
Acceptance No. 11-1024.13
Expiration Date 11/24/15
By [signature]
Miami-Dade Product Control

WARREN W. SCHAEFER ★ ENGINEER ★ LICENSE No. 44135 ★ STATE OF FLORIDA ★ PROFESSIONAL ENGINEER

OCT 19 2011

| DRAWN BY: W.R.M. | CHECKED BY: W.W.S. |
|---|---|
| PLOT: 1=24 | DATE: 01/23/09 |

| NO. | REVISION DESCRIPTION | BY | DATE |
|---|---|---|---|

DRAWING TITLE: LIFT & SLIDE BRONZE CLAD SLIDING GLASS IMPACT DOORS

MANUFACTURER: PEETZ WINDOWS & DOORS
15951 S.W. 41ST STREET; SUITE 150
WESTON, FL 33331
954-659-3887

CONSULTANTS
W. W. SCHAEFER ENGINEERING & CONSULTING, P.A. (CA 6809)
7480 150TH COURT NORTH
PALM BEACH GARDENS, FL 33418
PHONE: 561-744-3424

CERTIFICATION
WARREN W. SCHAEFER P.E. P.E. NO. 44135

DRAWING NO. 1632 | REV. A
SHEET NO. 16 OF 31

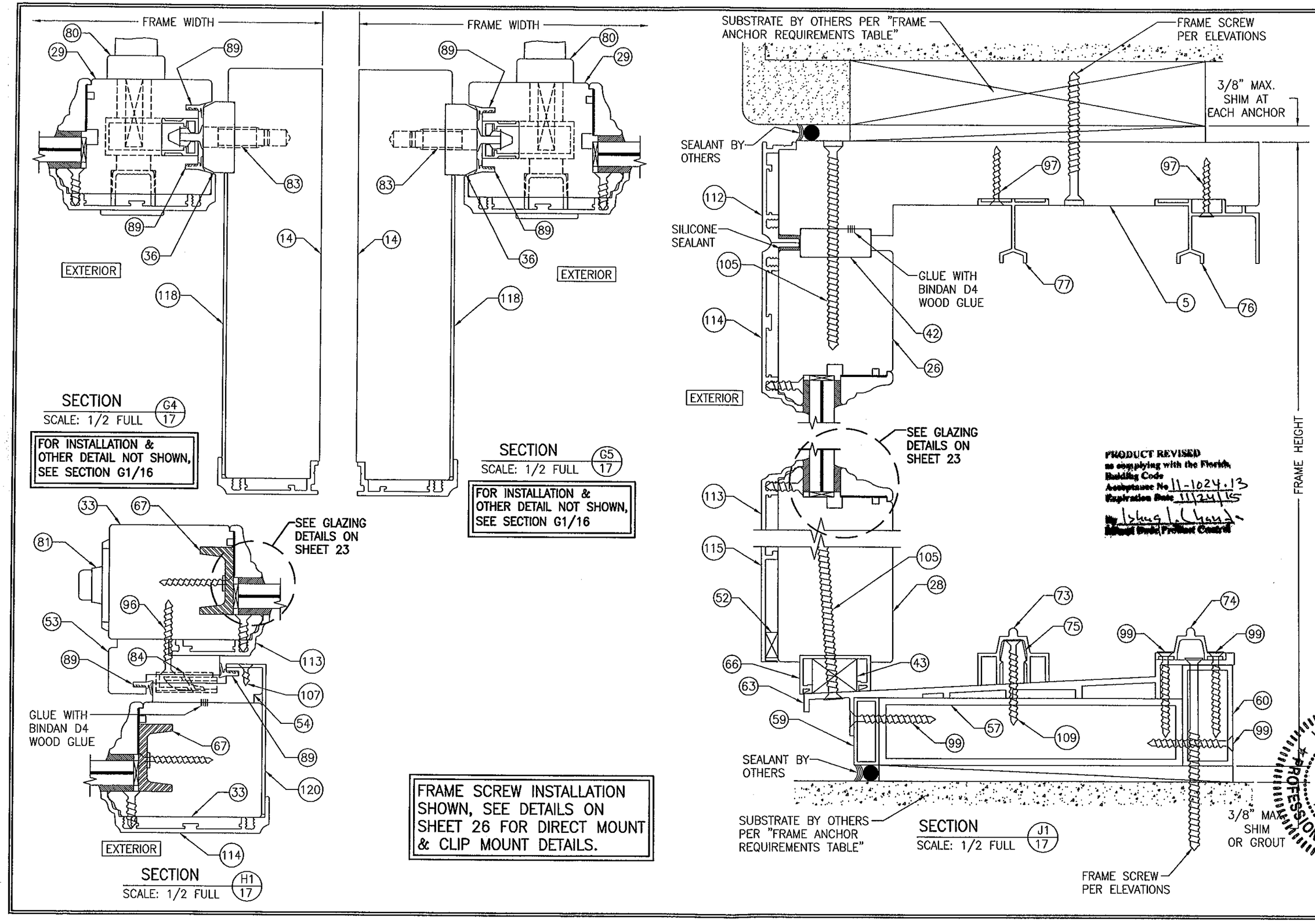


SECTION G4/17
SCALE: 1/2 FULL

FOR INSTALLATION & OTHER DETAIL NOT SHOWN, SEE SECTION G1/16



SECTION G5/17
SCALE: 1/2 FULL

FOR INSTALLATION & OTHER DETAIL NOT SHOWN, SEE SECTION G1/16



SECTION H1/17
SCALE: 1/2 FULL

FRAME SCREW INSTALLATION SHOWN, SEE DETAILS ON SHEET 26 FOR DIRECT MOUNT & CLIP MOUNT DETAILS.



SECTION J1/17
SCALE: 1/2 FULL

PRODUCT REVISED
as complying with the Florida Building Code
Acceptance No 11-1024.13
Expiration Date 11/24/15
By Ishag L. Chand
Manual Dade Product Control

| DRAWN BY: W.R.M. | CHECKED BY: W.W.S. |
|---|---|
| PLOT: 1=24 | DATE: 01/23/09 |

| NO. | REVISION DESCRIPTION | BY | DATE |
|---|---|---|---|

DRAWING TITLE
LIFT & SLIDE BRONZE CLAD SLIDING GLASS IMPACT DOORS

MANUFACTURER
PEETZ WINDOWS & DOORS
15951 S.W. 41ST STREET; SUITE 150
WESTON, FL 33331
954-659-3887

CONSULTANTS
W. W. SCHAEFER ENGINEERING & CONSULTING, P.A. (CA 6809)
7480 150TH COURT NORTH
PALM BEACH GARDENS, FL 33418
PHONE: 561-744-3424

CERTIFICATION
WARREN W. SCHAEFER
LICENSE NO. 44135
STATE OF FLORIDA
PROFESSIONAL ENGINEER
1/9/2014
WARREN W. SCHAEFER, P.E. NO. 44135

DRAWING NO. 1632 | REV. A
SHEET NO. 17 OF 31

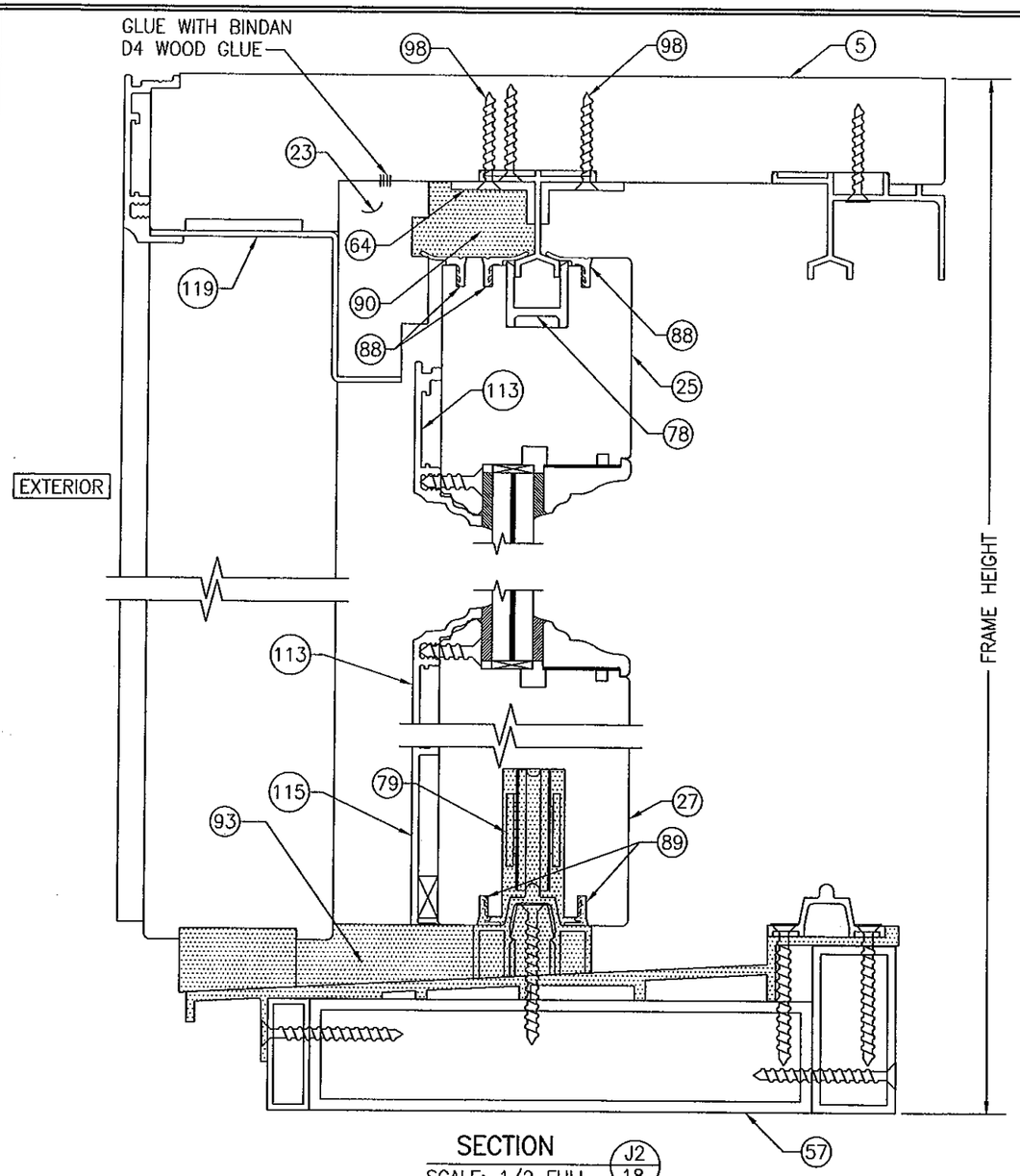


SECTION J2/18
SCALE: 1/2 FULL

FOR INSTALLATION & OTHER DETAIL NOT SHOWN, SEE SECTION J1/17

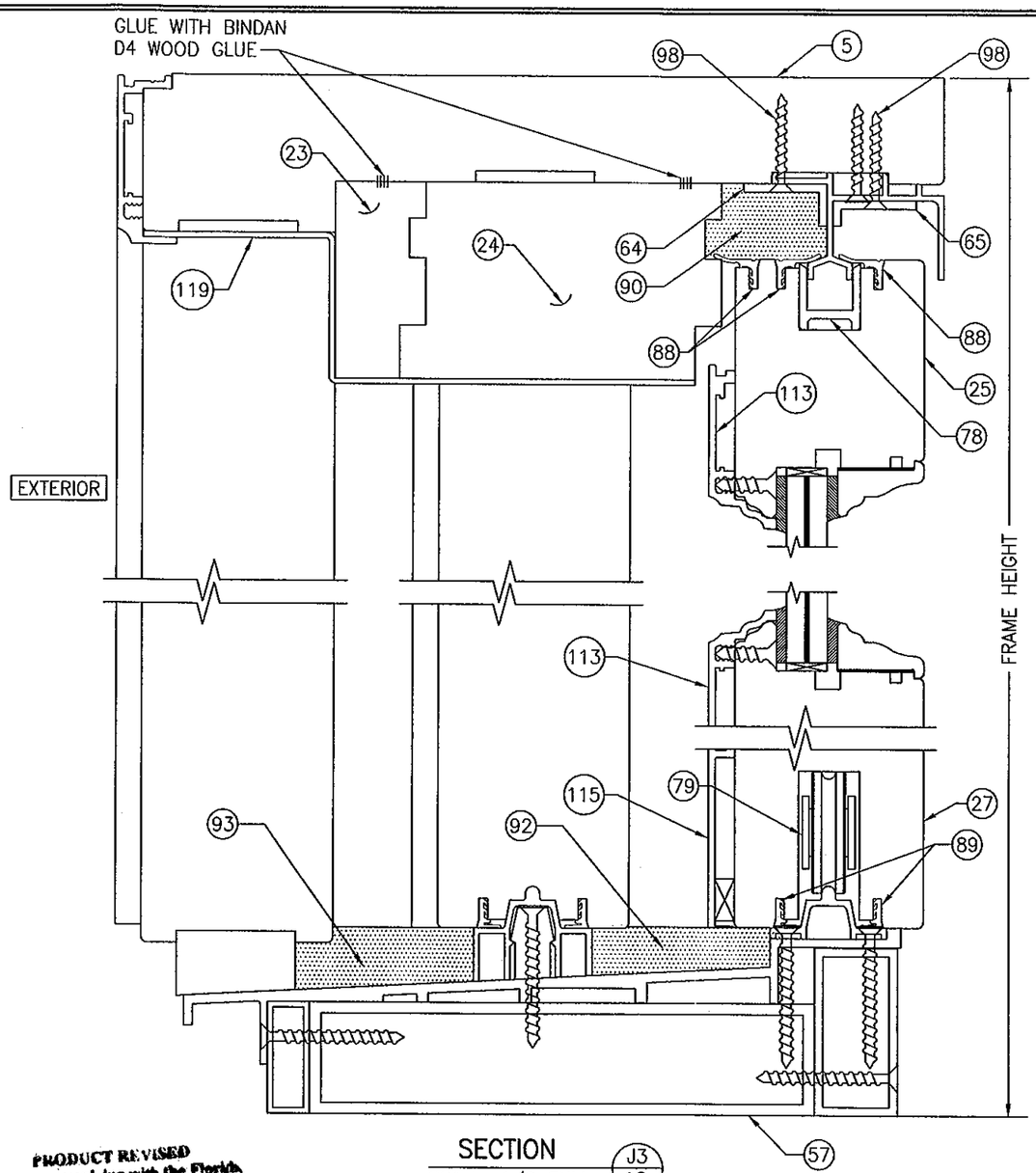


SECTION J3/18
SCALE: 1/2 FULL

FOR INSTALLATION & OTHER DETAIL NOT SHOWN, SEE SECTION J1/17

PRODUCT REVISED
as complying with the Florida
Building Code
Acceptance No 11-1024.13
Expiration Date 1/24/15
By Ishag I. Chanda
Broward Code Product Control

WARREN W. SCHAEFER ★ LICENSE No. 44135 ★ STATE OF FLORIDA ★ PROFESSIONAL ENGINEER

| DRAWN BY: W.R.M. | CHECKED BY: W.W.S. |
|---|---|
| PLOT: 1=24 | DATE: 01/23/09 |

| NO. | REVISION DESCRIPTION | BY | DATE |
|---|---|---|---|

DRAWING TITLE
LIFT & SLIDE BRONZE CLAD SLIDING GLASS IMPACT DOORS

MANUFACTURER
PEETZ WINDOWS & DOORS
15951 S.W. 41ST STREET; SUITE 150
WESTON, FL 33331
954-659-3887

CONSULTANTS
W. W. SCHAEFER ENGINEERING & CONSULTING, P.A. (CA 6809)
7480 150TH COURT NORTH
PALM BEACH GARDENS, FL 33418
PHONE: 561-744-3424

CERTIFICATION
OCT 19 2011
WARREN W. SCHAEFER, P.E.
P.E. NO. 44135

DRAWING NO. 1632 REV. A
SHEET NO. 18 OF 31

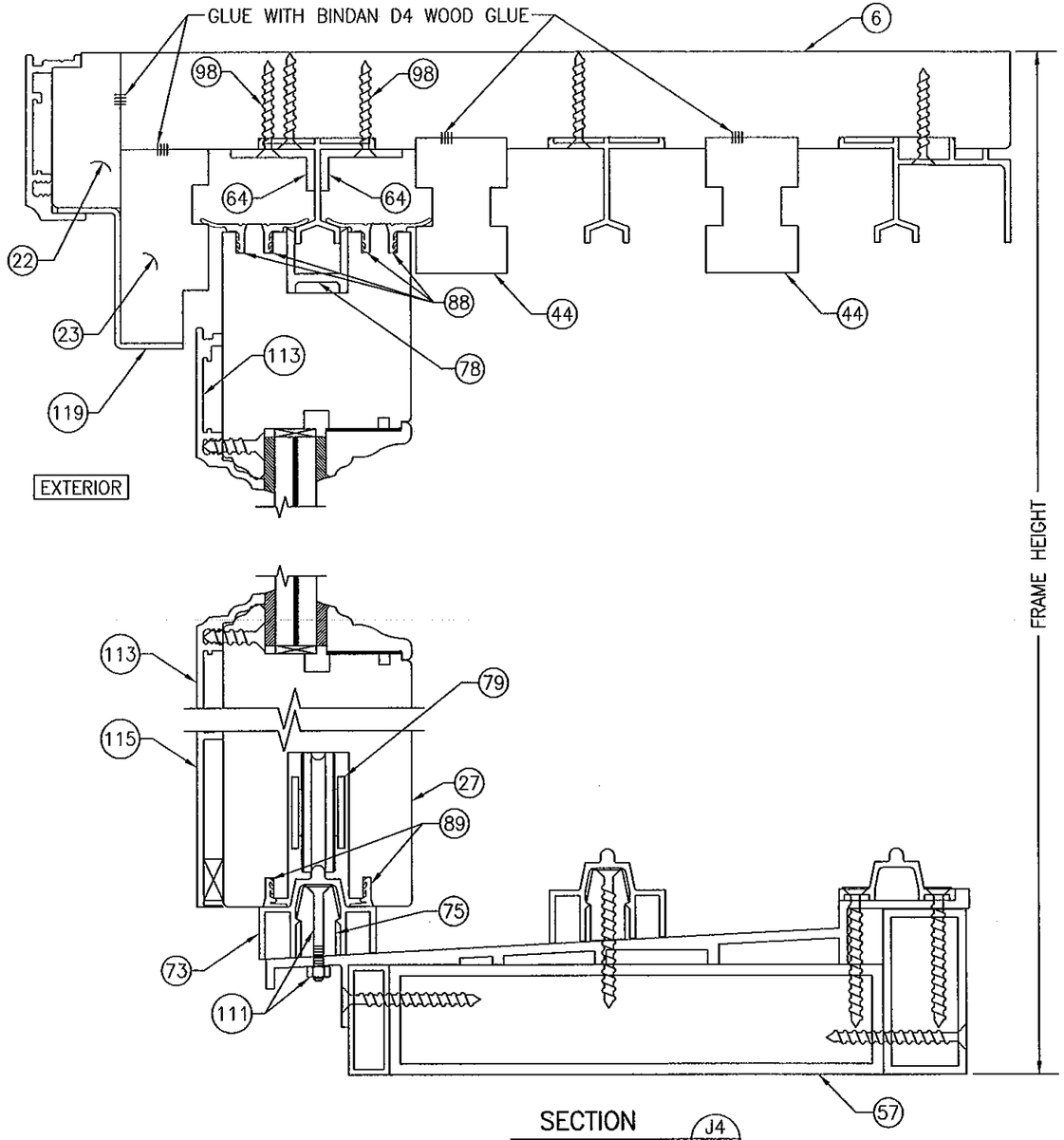


SECTION J4/19
SCALE: 1/2 FULL

FOR INSTALLATION & OTHER DETAIL NOT SHOWN, SEE SECTION J1/17

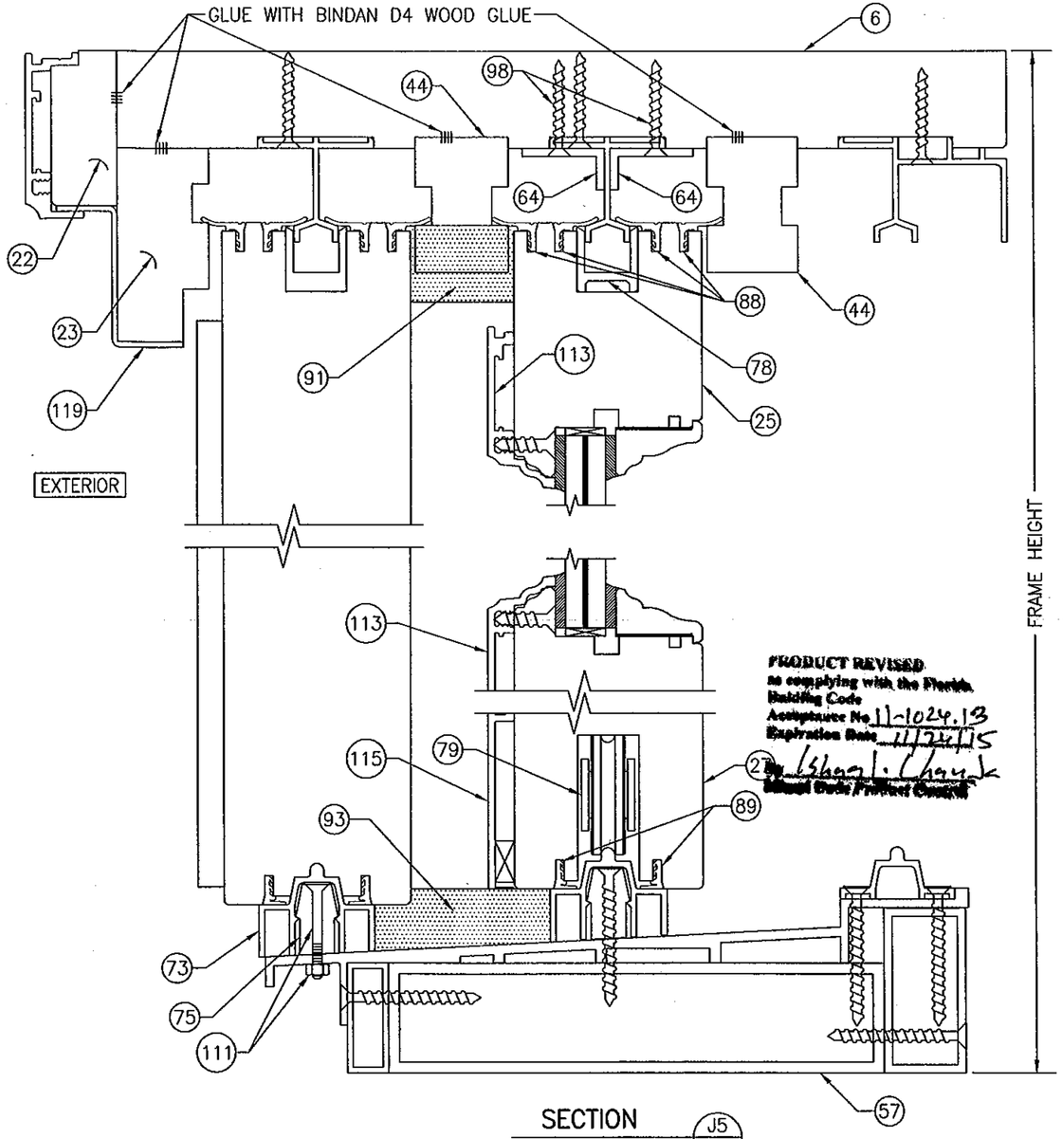


SECTION J5/19
SCALE: 1/2 FULL

FOR INSTALLATION & OTHER DETAIL NOT SHOWN, SEE SECTION J1/17

PRODUCT REVISED
as complying with the Florida Building Code
Acceptance No. 11-1024.13
Expiration Date 11/24/15
By Ishaq I. Chaujk
Miami Dade Product Control

WARREN W. SCHAEFER ★ PROFESSIONAL ENGINEER ★ LICENSE No. 44135 STATE OF FLORIDA

| DRAWN BY: W.R.M. | CHECKED BY: W.W.S. |
|---|---|
| PLOT: 1=24 | DATE: 01/23/09 |

| NO. | REVISION DESCRIPTION | BY | DATE |
|---|---|---|---|

DRAWING TITLE
LIFT & SLIDE BRONZE CLAD SLIDING GLASS IMPACT DOORS

MANUFACTURER
PEETZ WINDOWS & DOORS
15951 S.W. 41ST STREET; SUITE 150
WESTON, FL 33331
954-659-3887

CONSULTANTS
W. W. SCHAEFER ENGINEERING & CONSULTING, P.A. (CA 6809)
7480 150TH COURT NORTH
PALM BEACH GARDENS, FL 33418
PHONE: 561-744-3424

CERTIFICATION
OCT 19 2011
WARREN W. SCHAEFER, P.E.
P.E. NO. 44135

DRAWING NO. 1632 REV. A
SHEET NO. 19 OF 31

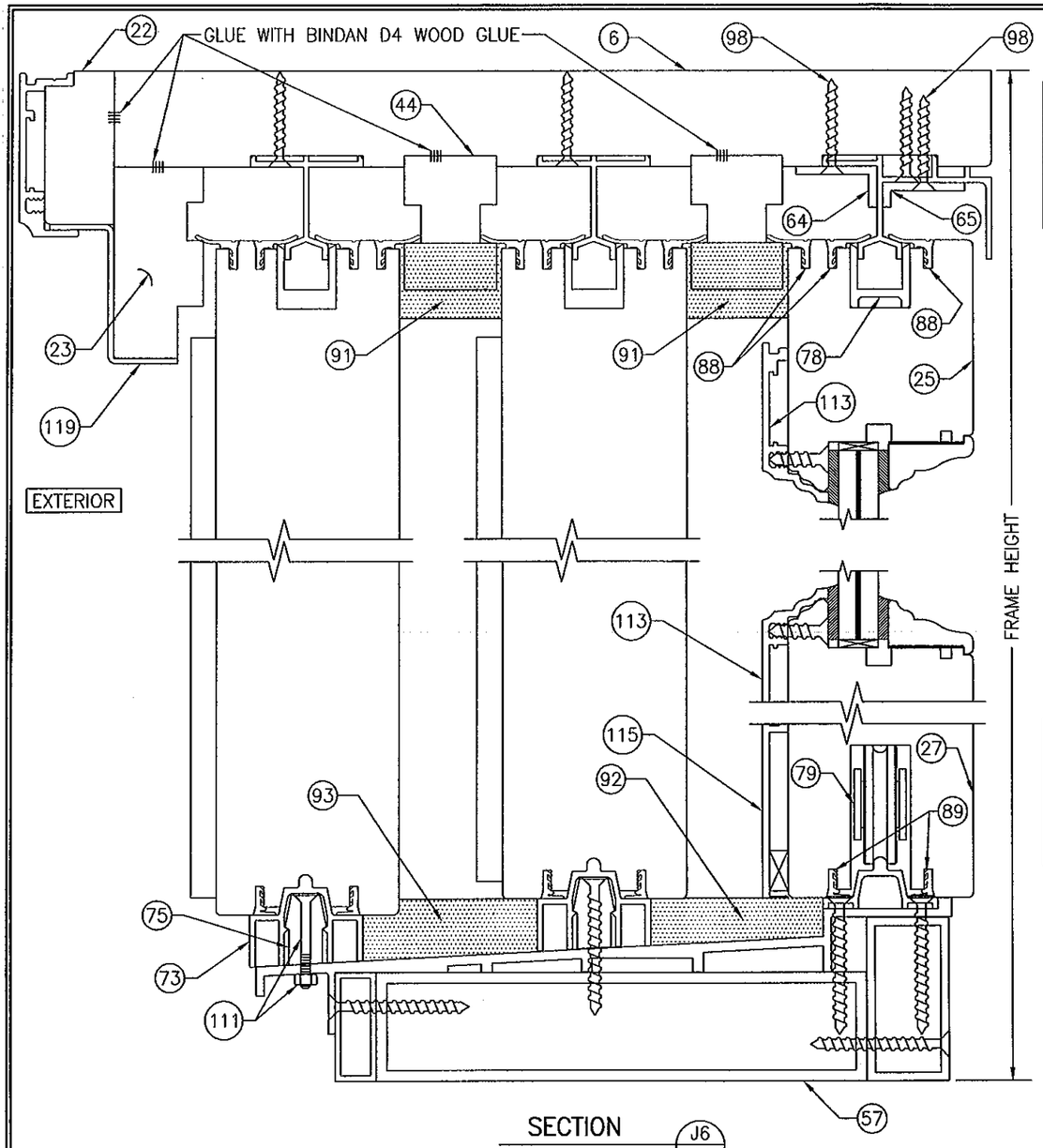


SECTION J6/20
SCALE: 1/2 FULL

FOR INSTALLATION & OTHER DETAIL NOT SHOWN, SEE SECTION J1/17

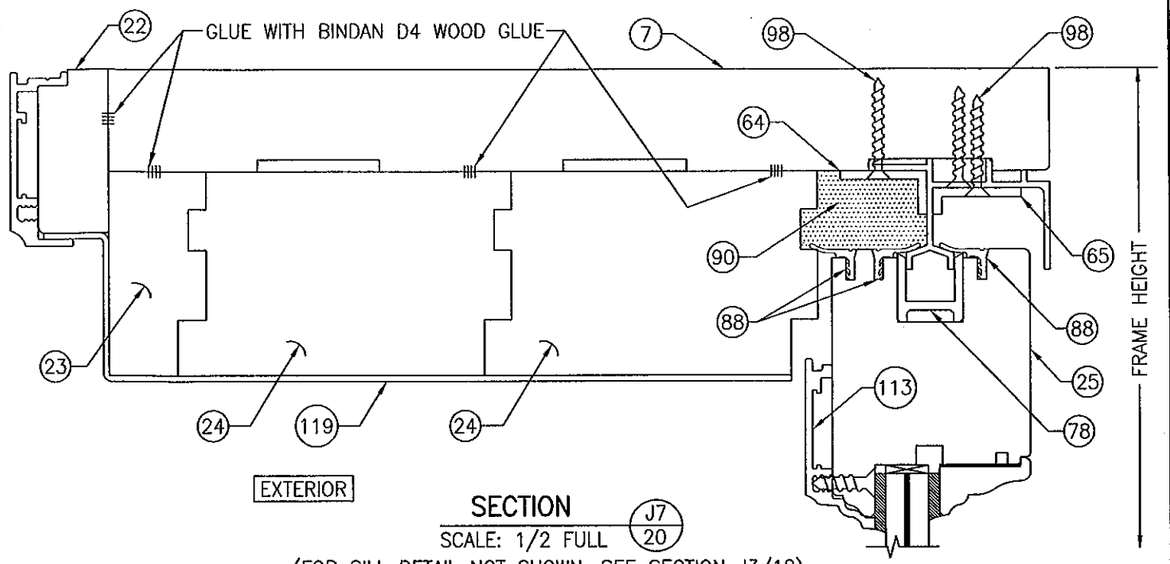


SECTION J7/20
SCALE: 1/2 FULL
(FOR SILL DETAIL NOT SHOWN, SEE SECTION J3/18)

FOR INSTALLATION & OTHER DETAIL NOT SHOWN, SEE SECTION J1/17

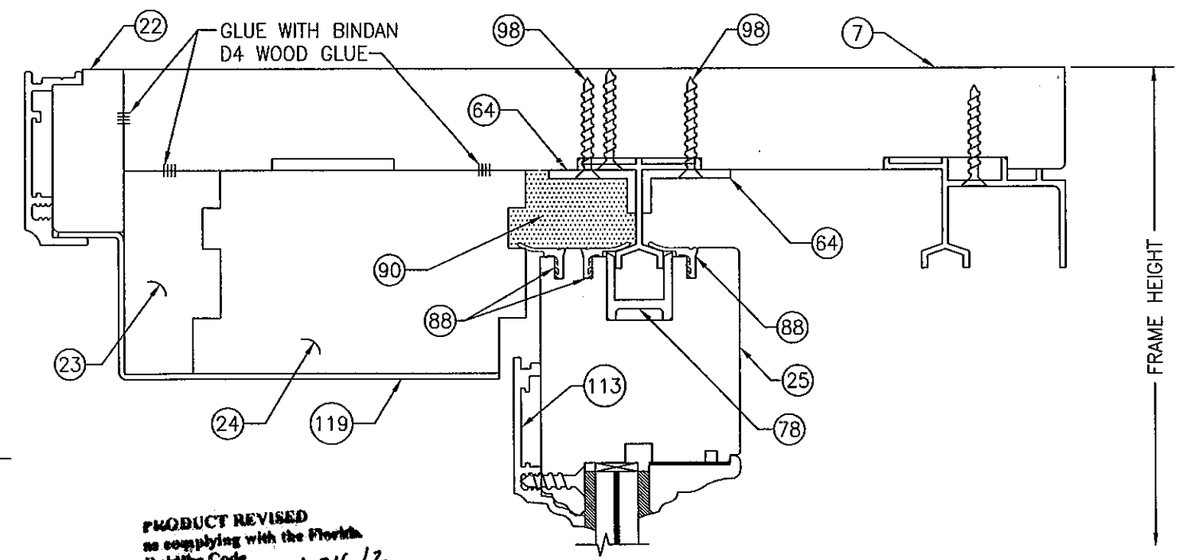


SECTION J8/20
SCALE: 1/2 FULL
(FOR SILL DETAIL NOT SHOWN, SEE SECTION J2/18)

FOR INSTALLATION & OTHER DETAIL NOT SHOWN, SEE SECTION J1/17

PRODUCT REVISED
as complying with the Florida Building Code
Acceptance No. 11-1024.13
Expiration Date 11/24/15
By Ishag I. Chan
Initial Date Product Control

WARREN W. SCHAEFER ★ LICENSE No. 44135 ★ STATE OF FLORIDA ★ PROFESSIONAL ENGINEER

| DRAWN BY: W.R.M. | CHECKED BY: W.W.S. |
|---|---|
| PLOT: 1=24 | DATE: 01/23/09 |

| NO. | REVISION DESCRIPTION | BY | DATE |
|---|---|---|---|

DRAWING TITLE
LIFT & SLIDE BRONZE CLAD SLIDING GLASS IMPACT DOORS

MANUFACTURER
PEETZ WINDOWS & DOORS
15951 S.W. 41ST STREET; SUITE 150
WESTON, FL 33331
954-659-3887

CONSULTANTS
W. W. SCHAEFER ENGINEERING & CONSULTING, P.A. (CA 6809)
7480 150TH COURT NORTH
PALM BEACH GARDENS, FL 33418
PHONE: 561-744-3424

CERTIFICATION
OCT 19 2011
WARREN W. SCHAEFER, P.E.
P.E. NO. 44135

DRAWING NO. 1632 REV. A
SHEET NO. 20 OF 31

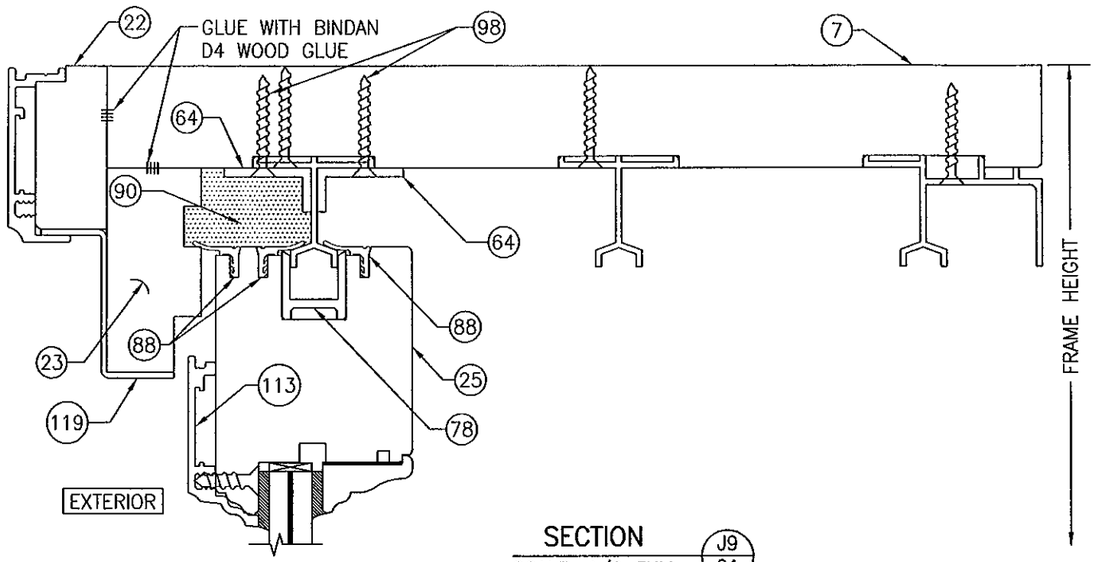


SECTION J9/21
SCALE: 1/2 FULL
(FOR SILL DETAIL NOT SHOWN, SEE SECTION J4/19)

FOR INSTALLATION & OTHER DETAIL NOT SHOWN, SEE SECTION J1/17

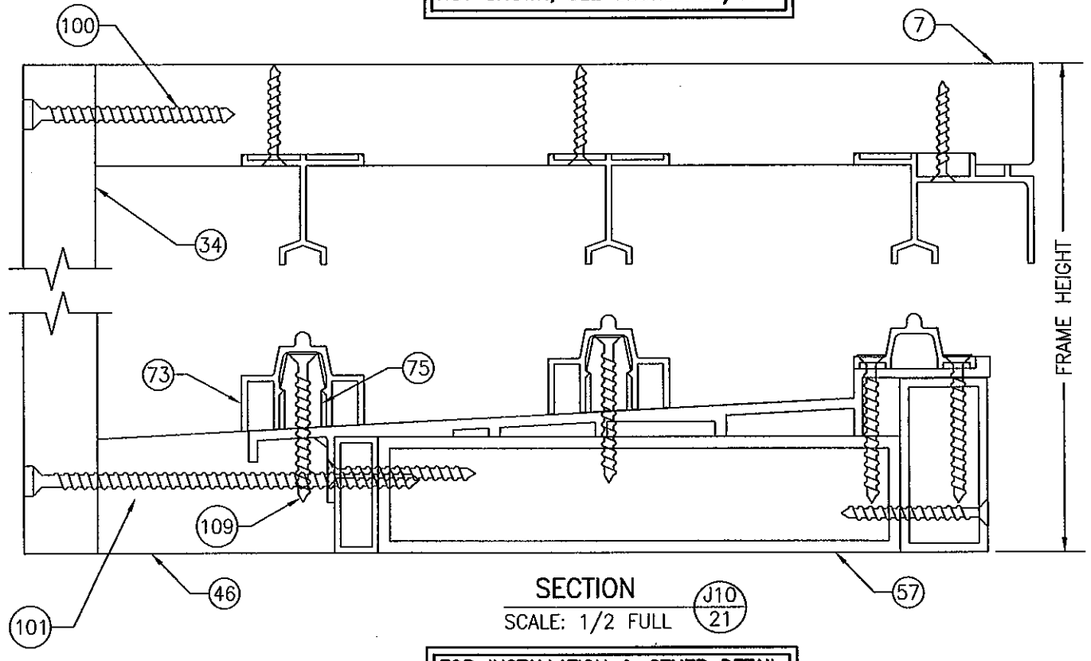


SECTION J10/21
SCALE: 1/2 FULL

FOR INSTALLATION & OTHER DETAIL NOT SHOWN, SEE SECTION J1/17

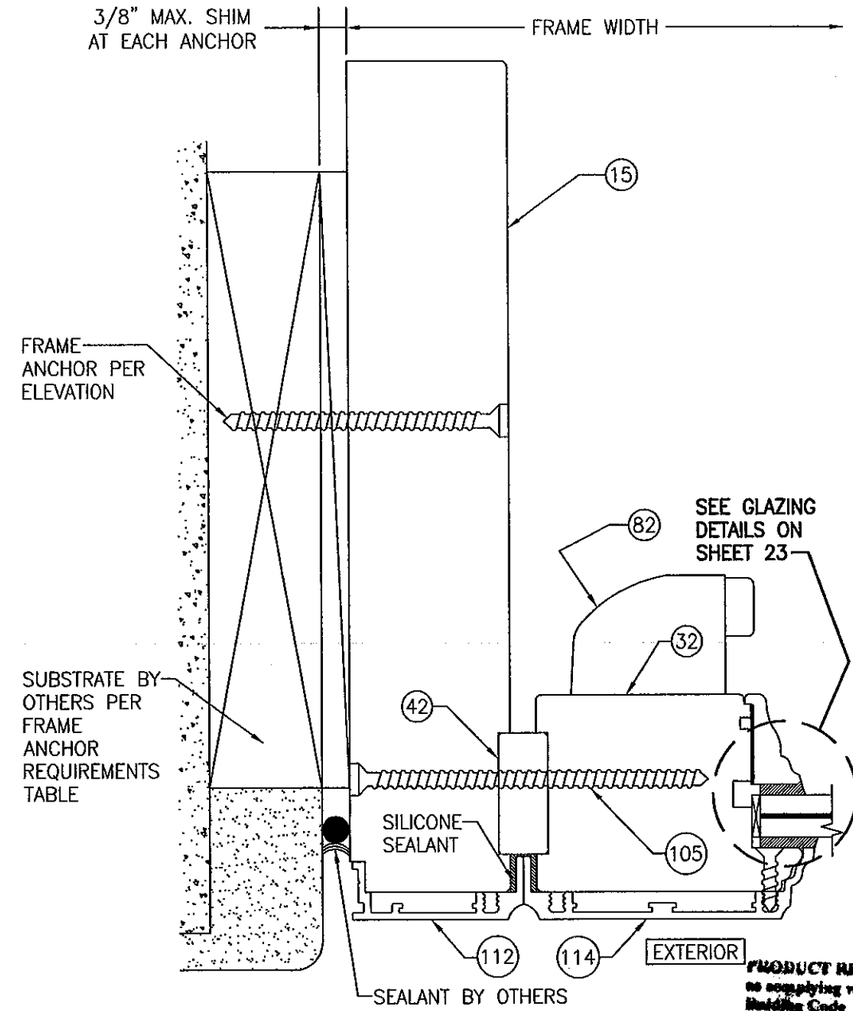


SECTION K1/21
SCALE: 1/2 FULL

PRODUCT REVISED
as complying with the Florida
Building Code
Acceptance No. 11-1024.13
Expiration Date 11/24/15
By Ishaq J. Chand
Miami Dade Product Control

FRAME SCREW INSTALLATION SHOWN, SEE DETAILS ON SHEET 26 FOR DIRECT MOUNT & CLIP MOUNT DETAILS.

WARREN W. SCHAEFER ★ PROFESSIONAL ENGINEER ★
LICENSE No. 44135
STATE OF FLORIDA

| DRAWN BY: W.R.M. | CHECKED BY: W.W.S. |
|---|---|
| PLOT: 1=24 | DATE: 01/23/09 |

| NO. | REVISION DESCRIPTION | BY | DATE |
|---|---|---|---|

DRAWING TITLE
LIFT & SLIDE BRONZE CLAD SLIDING GLASS IMPACT DOORS

MANUFACTURER
PEETZ WINDOWS & DOORS
15951 S.W. 41ST STREET; SUITE 150
WESTON, FL 33331
954-659-3887

CONSULTANTS
W. W. SCHAEFER ENGINEERING & CONSULTING, P.A. (CA 6809)
7480 150TH COURT NORTH
PALM BEACH GARDENS, FL 33418
PHONE: 561-744-3424

CERTIFICATION
OCT 19 2011
WARREN W. SCHAEFER, P.E.
P.E. NO. 44135

DRAWING NO. 1632 REV. A
SHEET NO. 21 OF 31

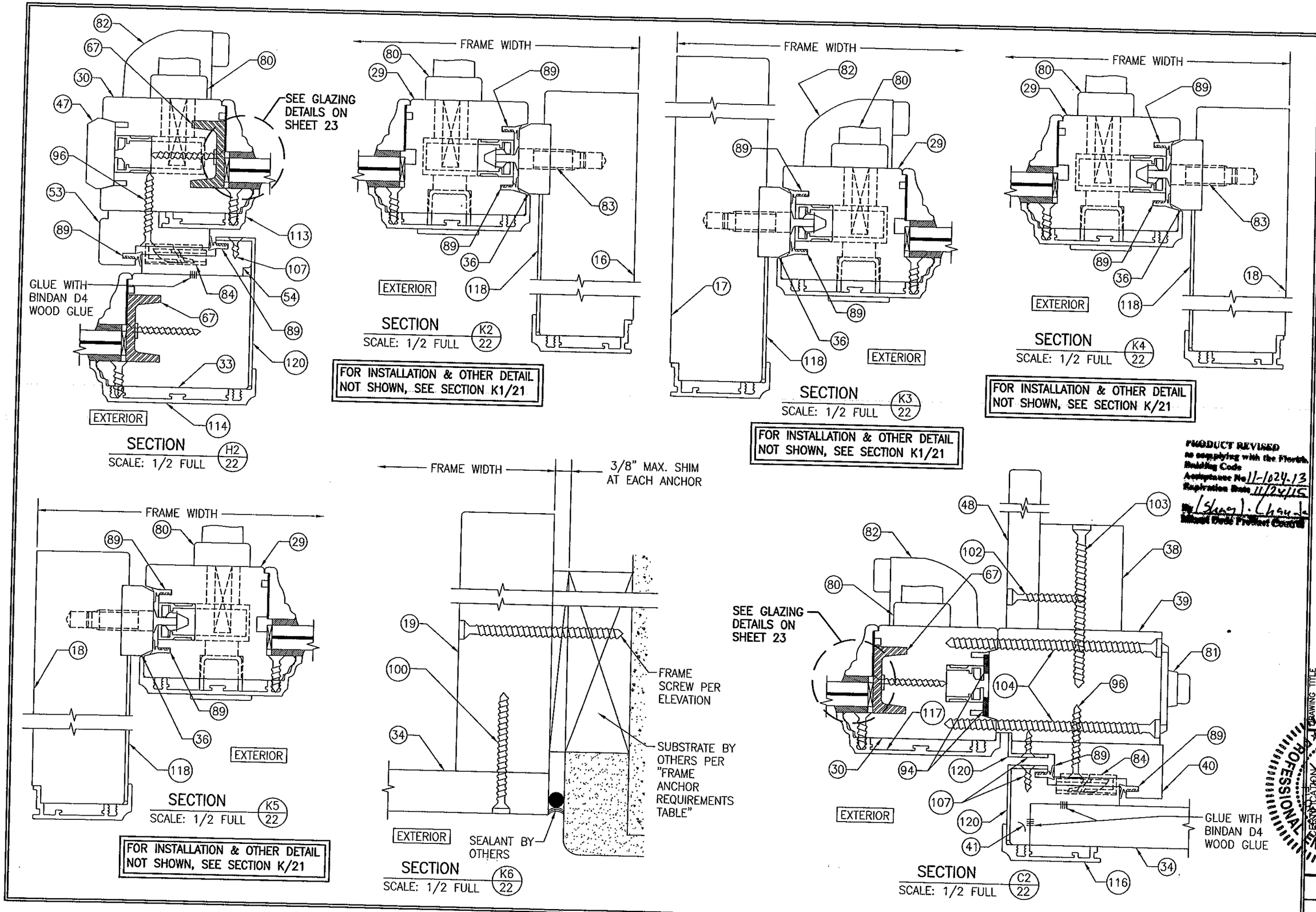


PRODUCT REVISED
as complying with the Florida Building Code
Acceptance No. 11-1024.13
Expiration Date 11/24/15
By [signature]
Miami Dade Product Control

| DRAWN BY: W.R.M. | CHECKED BY: W.W.S. |
|---|---|
| PLOT: 1=24 | DATE: 01/23/09 |

| NO. | REVISION DESCRIPTION | BY | DATE |
|---|---|---|---|

DRAWING TITLE
LIFT & SLIDE BRONZE CLAD SLIDING GLASS IMPACT DOORS

MANUFACTURER
PEETZ WINDOWS & DOORS
15951 S.W. 41ST STREET; SUITE 150
WESTON, FL 33331
954-659-3887

CONSULTANTS
W. W. SCHAEFER ENGINEERING & CONSULTING, P.A. (CA 6809)
7480 150TH COURT NORTH
PALM BEACH GARDENS, FL 33418
PHONE: 561-744-3424

WARREN W. SCHAEFER, P.E.
LICENSED
No. 44135
STATE OF FLORIDA
PROFESSIONAL ENGINEER

| DRAWING NO. | REV. |
|---|---|
| 1632 | A |

SHEET NO. 22 OF 31

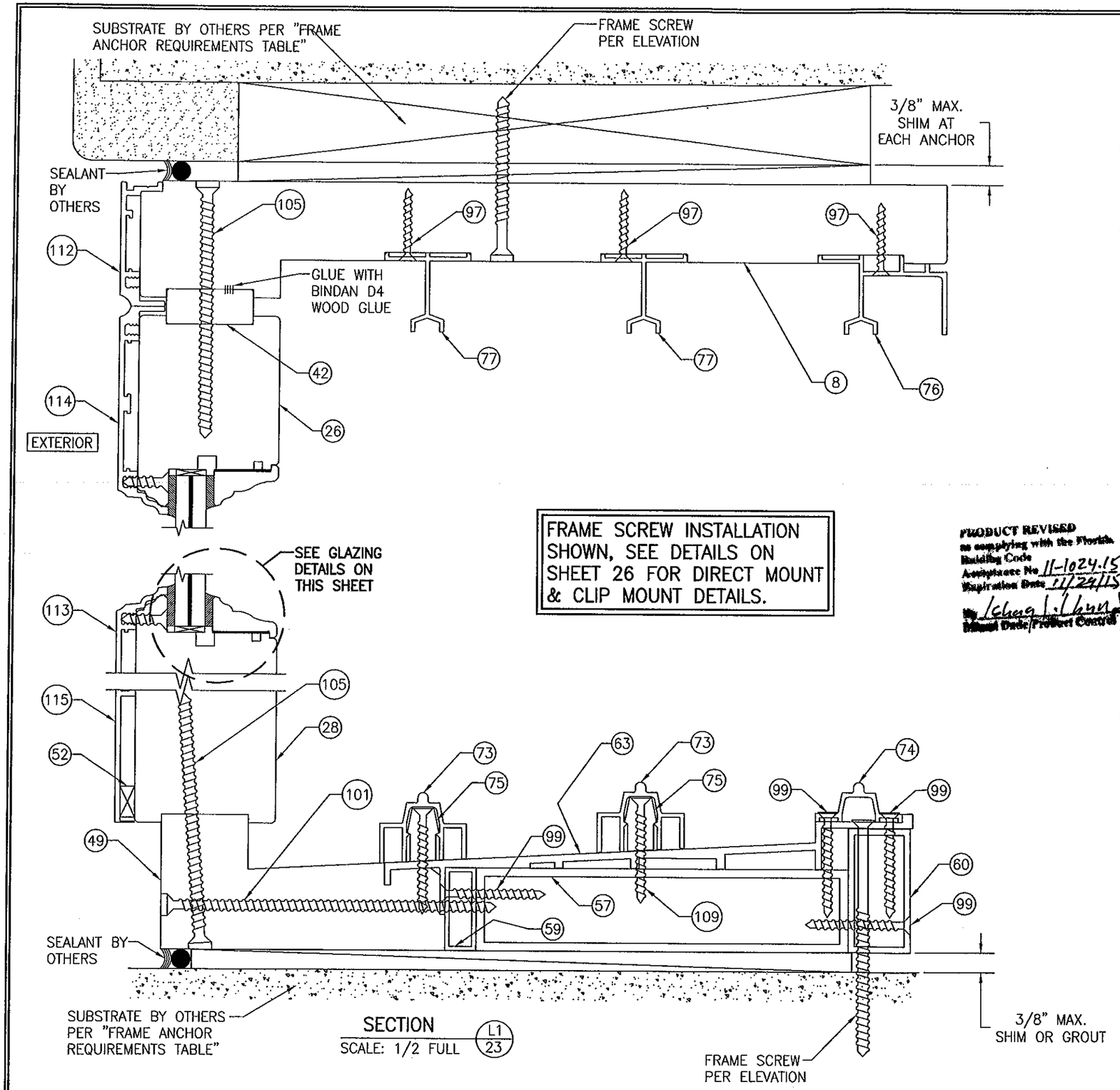


FRAME SCREW INSTALLATION SHOWN, SEE DETAILS ON SHEET 26 FOR DIRECT MOUNT & CLIP MOUNT DETAILS.

SECTION L1/23
SCALE: 1/2 FULL

PRODUCT REVISED as complying with the Florida Building Code
Acceptance No. 11-1024.15
Expiration Date 11/24/15
By [signature]
Manual Date/Product Control

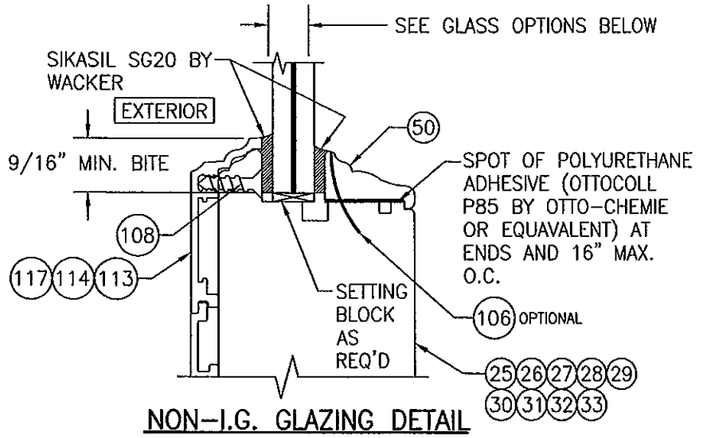


## NON-I.G. GLAZING DETAIL
## GLASS OPTIONS 1, 2 & 3

GLASS OPTION 1: 1/2" LAMINATED GLASS (3/16" H.S./0.075" SOLUTIA VANCEVA/1/4" H.S.)

GLASS OPTION 2: 9/16" LAMINATED GLASS (3/16" H.S./0.12" SOLUTIA SALFEX IIIG PVB/1/4" H.S.)

GLASS OPTION 3: 9/16" LAMINATED GLASS (1/4" H.S./0.075" SOLUTIA VANCEVA/1/4" H.S.)

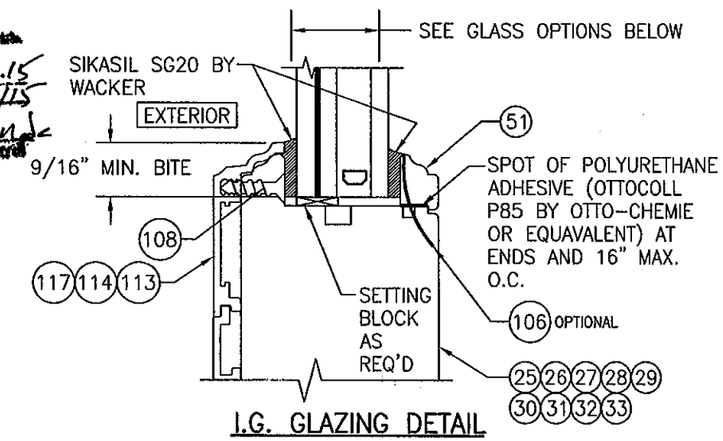


## I.G. GLAZING DETAIL
## GLASS OPTIONS 4 & 5

GLASS OPTION 4: 1 1/4" LAMINATED I.G. (3/16" H.S./0.12" SOLUTIA SALFEX IIIG PVB/1/4" H.S./1/2" AIR SPACE/3/16 TEMP.)

GLASS OPTION 5: 1 5/16" LAMINATED I.G. (1/4" AN./0.075" SOLUTIA VANCEVA/1/4" H.S./1/2" AIR SPACE/1/4 TEMP.)

WARREN W. SCHAEFER LICENSE No. 44135 STATE OF FLORIDA PROFESSIONAL ENGINEER

| DRAWN BY: W.R.M. | CHECKED BY: W.W.S. |
|---|---|
| PLOT: 1=24 | DATE: 01/23/09 |

| NO. | REVISION DESCRIPTION | BY | DATE |
|---|---|---|---|

DRAWING TITLE: LIFT & SLIDE BRONZE CLAD SLIDING GLASS IMPACT DOORS

MANUFACTURER: PEETZ WINDOWS & DOORS, 15951 S.W. 41ST STREET; SUITE 150, WESTON, FL 33331, 954-659-3887

CONSULTANTS: W. W. SCHAEFER ENGINEERING & CONSULTING, P.A. (CA 6809), 7480 150TH COURT NORTH, PALM BEACH GARDENS, FL 33418, PHONE: 561-744-3424

CERTIFICATION: OCT 19 2011 WARREN W. SCHAEFER, P.E. P.E. NO. 44135

DRAWING NO. 1632 REV. A

SHEET NO. 23 OF 31

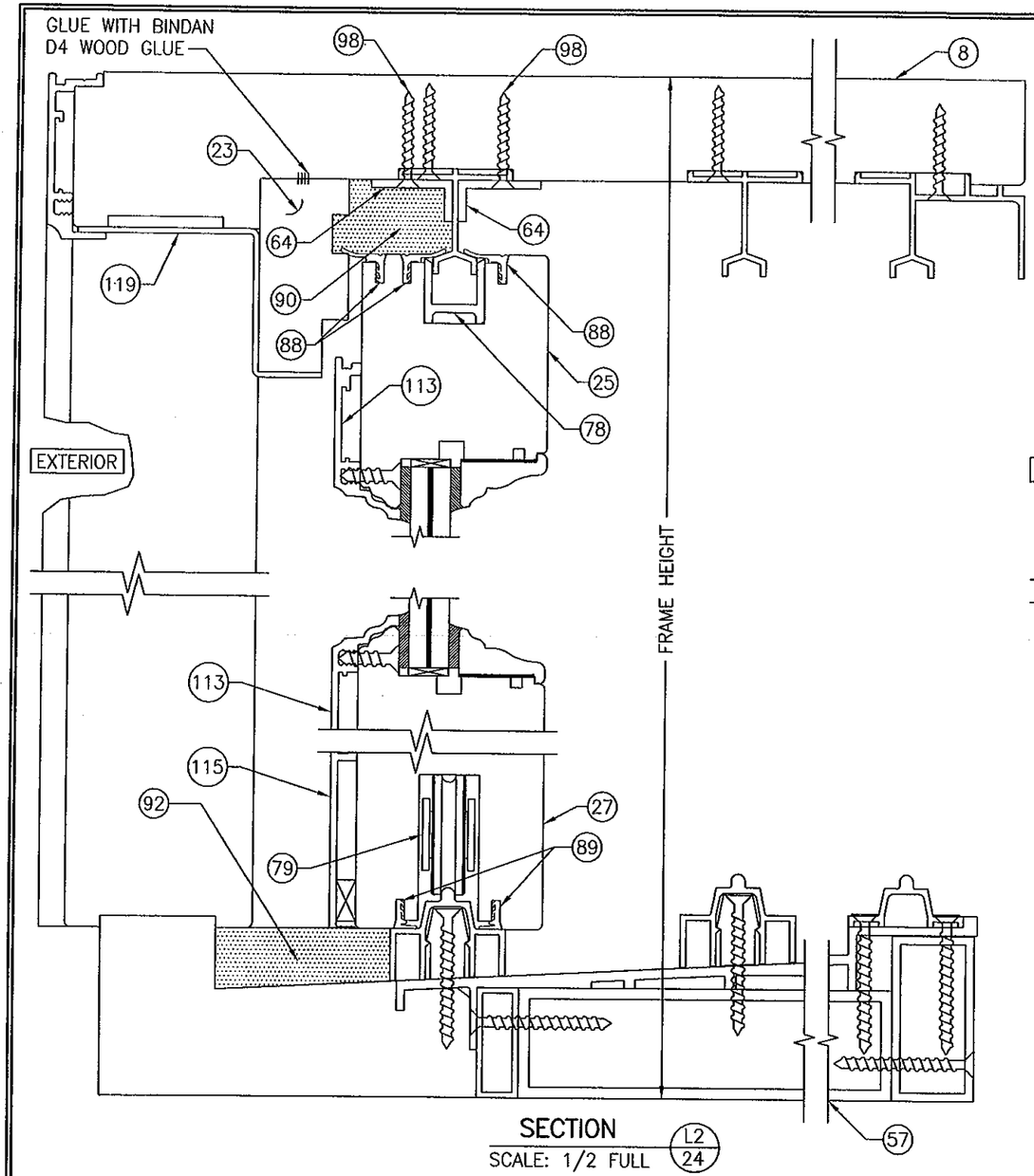


SECTION L2/24
SCALE: 1/2 FULL

FOR INSTALLATION & OTHER DETAIL NOT SHOWN, SEE SECTION L1/23

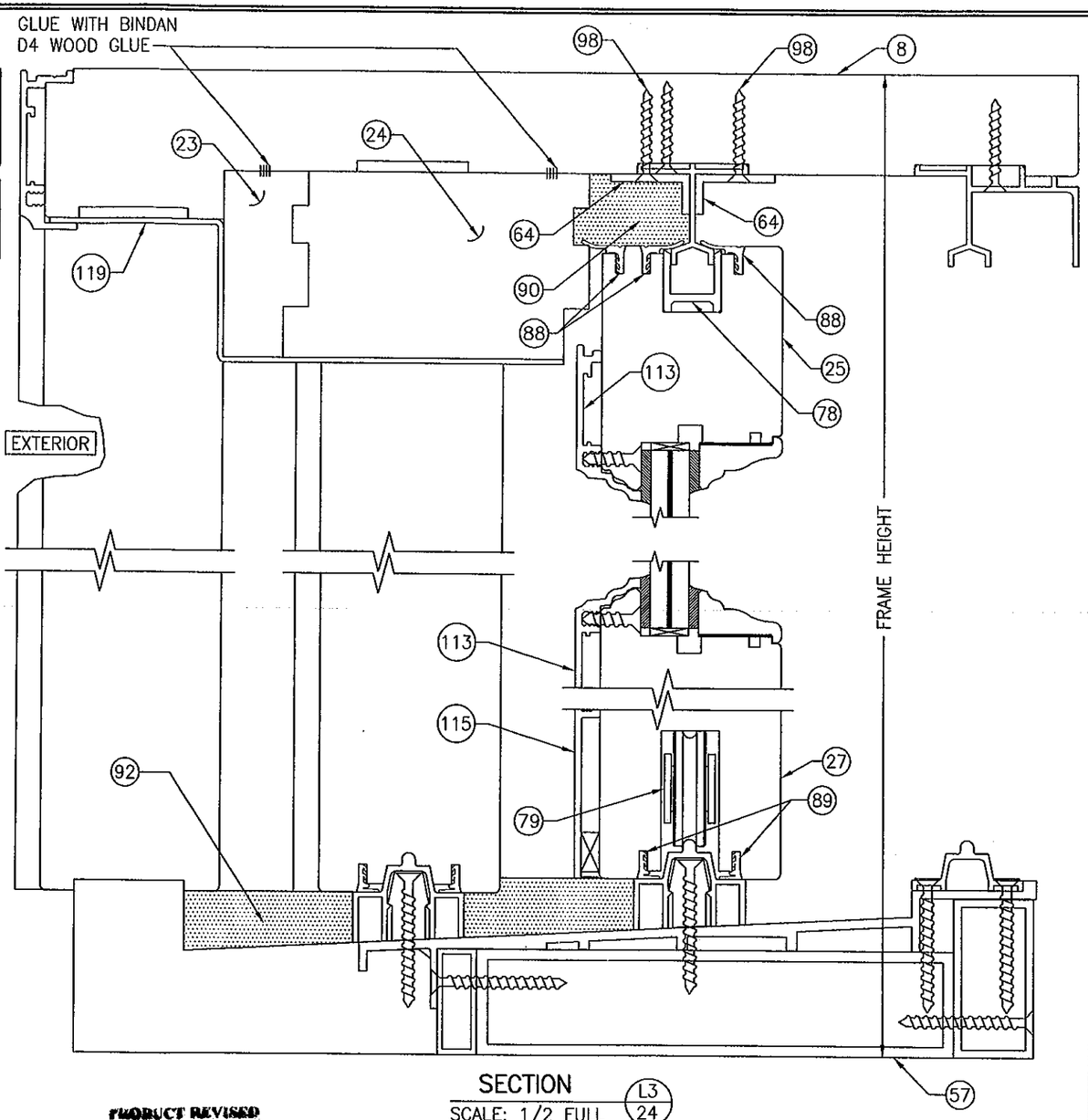


SECTION L3/24
SCALE: 1/2 FULL

FOR INSTALLATION & OTHER DETAIL NOT SHOWN, SEE SECTION L1/23

PRODUCT REVISED
as complying with the Florida
Building Code
Acceptance No. 11-1024.13
Expiration Date 11/24/15
By Ishaq L. Chand
Miami Dade Product Control

WARREN W. SCHAEFER ★ PROFESSIONAL ENGINEER ★ LICENSE No. 44135 ★ STATE OF FLORIDA

| DRAWN BY: W.R.M. | CHECKED BY: W.W.S. |
|---|---|
| PLOT: 1=24 | DATE: 01/23/09 |

| NO. | REVISION DESCRIPTION | BY | DATE |
|---|---|---|---|

DRAWING TITLE
LIFT & SLIDE BRONZE CLAD SLIDING GLASS IMPACT DOORS

MANUFACTURER
PEETZ WINDOWS & DOORS
15951 S.W. 41ST STREET; SUITE 150
WESTON, FL 33331
954-659-3887

CONSULTANTS
W. W. SCHAEFER ENGINEERING & CONSULTING, P.A. (CA 6809)
7480 150TH COURT NORTH
PALM BEACH GARDENS, FL 33418
PHONE: 561-744-3424

CERTIFICATION
OCT 19 2011
WARREN W. SCHAEFER, P.E.
P.E. NO. 44135

DRAWING NO. 1632 REV. A
SHEET NO. 24 OF 31

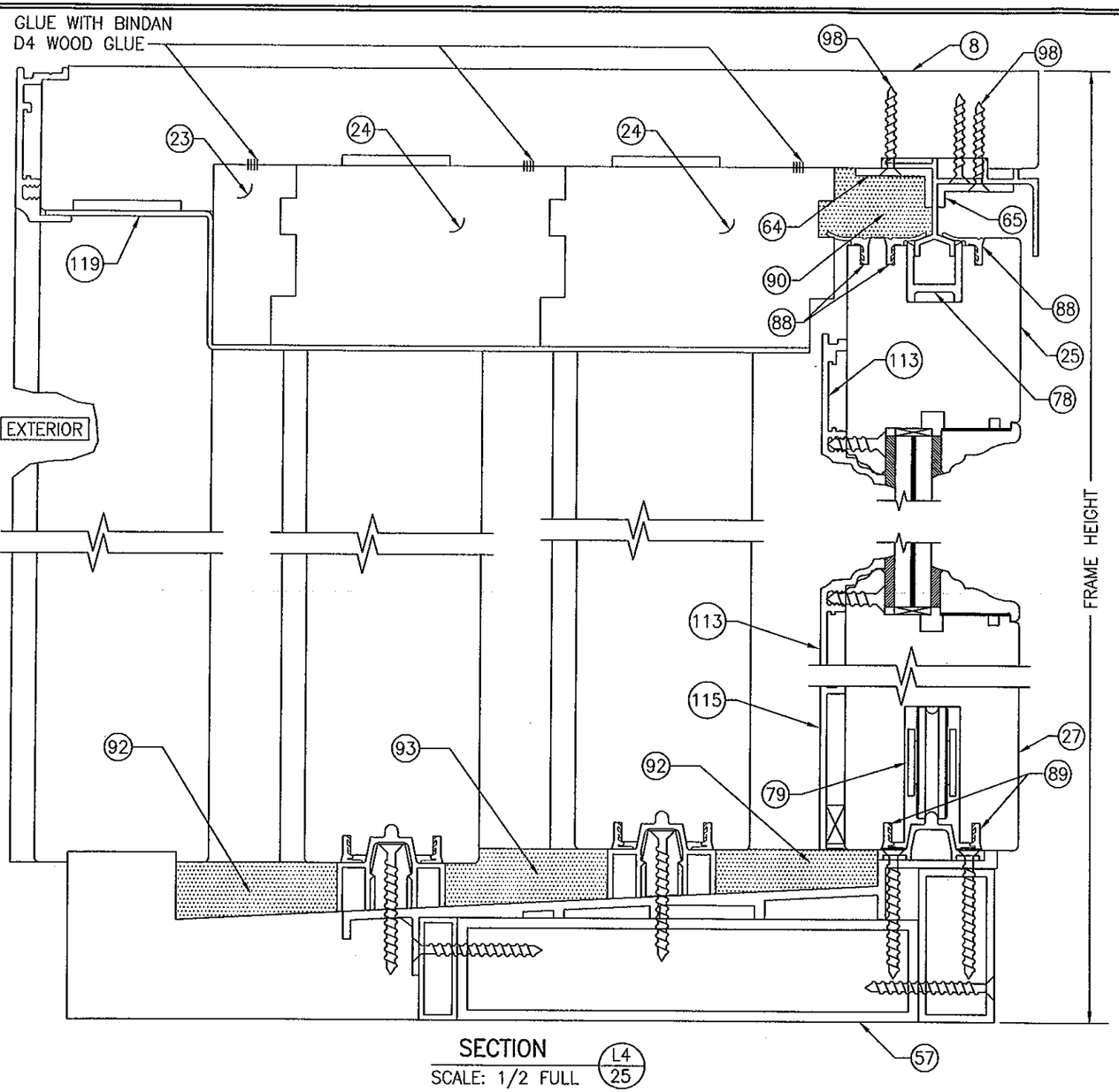


SECTION L4/25
SCALE: 1/2 FULL

FOR INSTALLATION & OTHER DETAIL NOT SHOWN, SEE SECTION L1/23

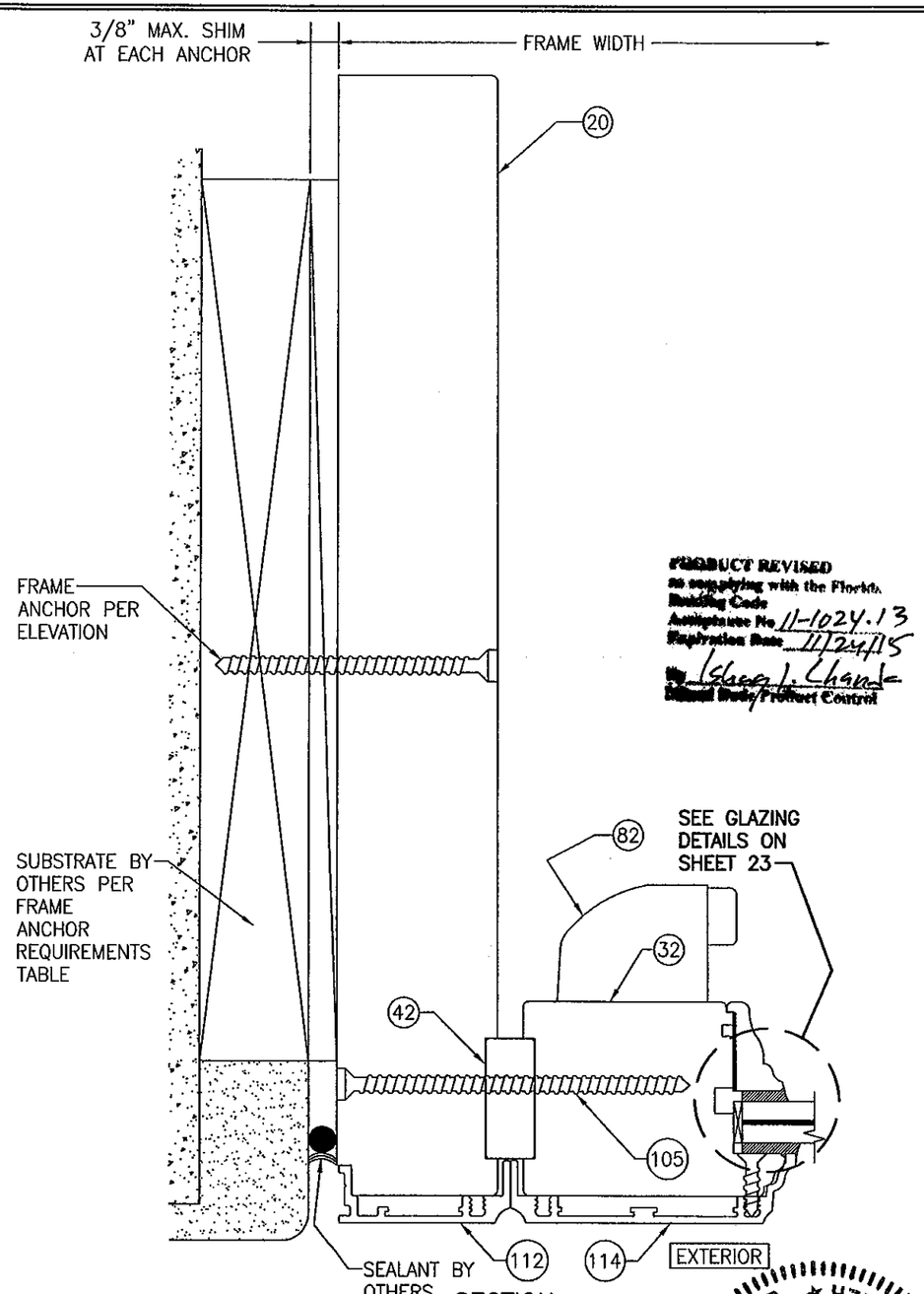


SECTION M1/25
SCALE: 1/2 FULL

FRAME SCREW INSTALLATION SHOWN, SEE DETAILS ON SHEET 26 FOR DIRECT MOUNT & CLIP MOUNT DETAILS.

PRODUCT REVISED
as complying with the Florida Building Code
Acceptance No. 11-1024.13
Expiration Date 11/24/15
By Ishaq J. Chand
Dated Date/Product Control

WARREN W. SCHAEFER ★ LICENSE No. 44135 ★ STATE OF FLORIDA ★ PROFESSIONAL ENGINEER

| DRAWN BY: W.R.M. | CHECKED BY: W.W.S. |
|---|---|
| PLOT: 1=24 | DATE: 01/23/09 |

| NO. | REVISION DESCRIPTION | BY | DATE |
|---|---|---|---|

DRAWING TITLE
LIFT & SLIDE BRONZE CLAD SLIDING GLASS IMPACT DOORS

MANUFACTURER
PEETZ WINDOWS & DOORS
15951 S.W. 41ST STREET; SUITE 150
WESTON, FL 33331
954-659-3887

CONSULTANTS
W. W. SCHAEFER ENGINEERING & CONSULTING, P.A. (CA 6809)
7480 150TH COURT NORTH
PALM BEACH GARDENS, FL 33418
PHONE: 561-744-3424

CERTIFICATION
OCT 19 2011
WARREN W. SCHAEFER, P.E.
P.E. NO. 44135

DRAWING NO. 1632 | REV. A

SHEET NO. 25 OF 31

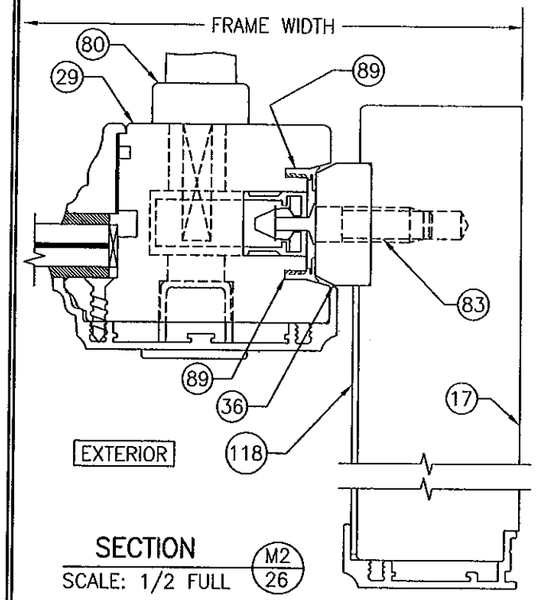


SECTION M2/26
SCALE: 1/2 FULL

FOR INSTALLATION & OTHER DETAIL NOT SHOWN, SEE SECTION M1/25

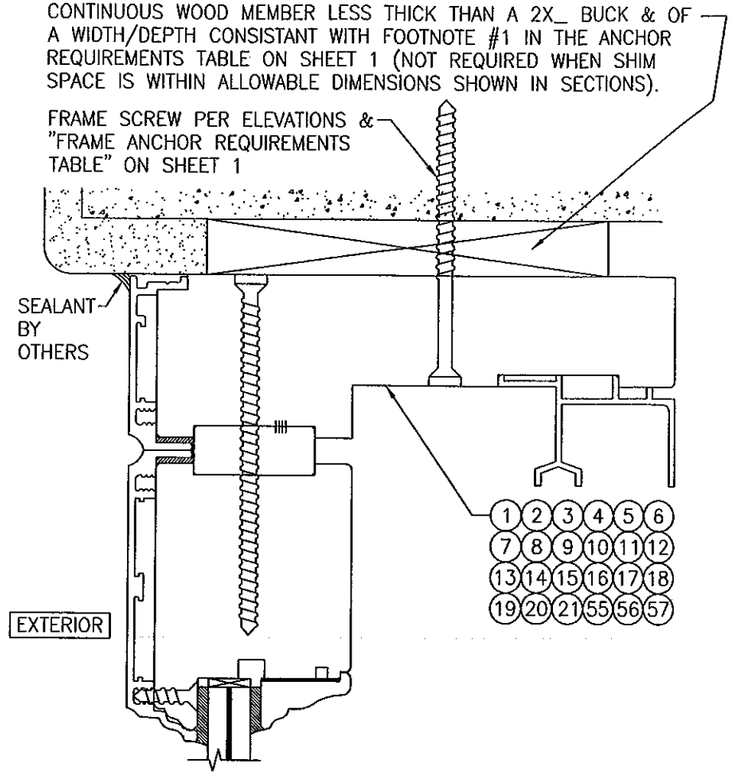


OPTIONAL DIRECT MOUNT DETAIL TO SUBSTRATE WITH SPACER

(2 PANEL DEEP HEAD SECTION SHOWN, ALL OTHER APPROVED HEAD, SILL & SIDE CONDITIONS ARE INSTALLED THE SAME)
(FOR DETAIL NOT SHOWN, SEE OTHER SECTIONS)

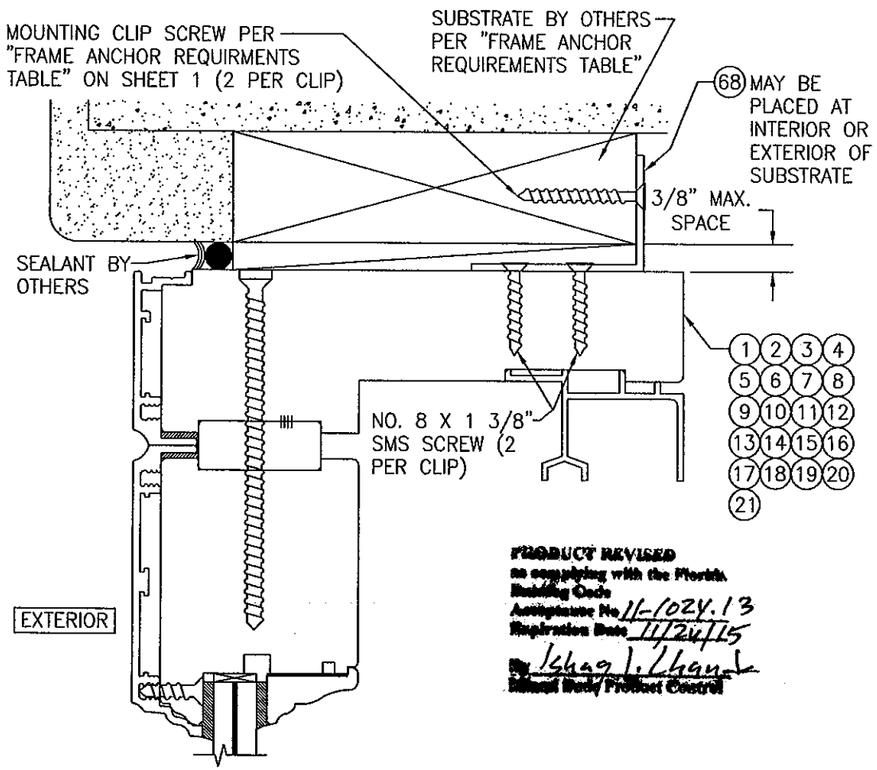


PRODUCT REVISED
as complying with the Florida Building Code
Acceptance No. 11-1024.13
Expiration Date 11/24/15
By Ishag I. Chan
Miami Dade Product Control

OPTIONAL MOUNTING CLIP DETAIL AT HEAD & SIDES

(2 PANEL DEEP HEAD SECTION SHOWN, ALL OTHER APPROVED HEAD & SIDE CONDITIONS ARE INSTALLED THE SAME)
(FOR DETAIL NOT SHOWN, SEE OTHER SECTIONS)

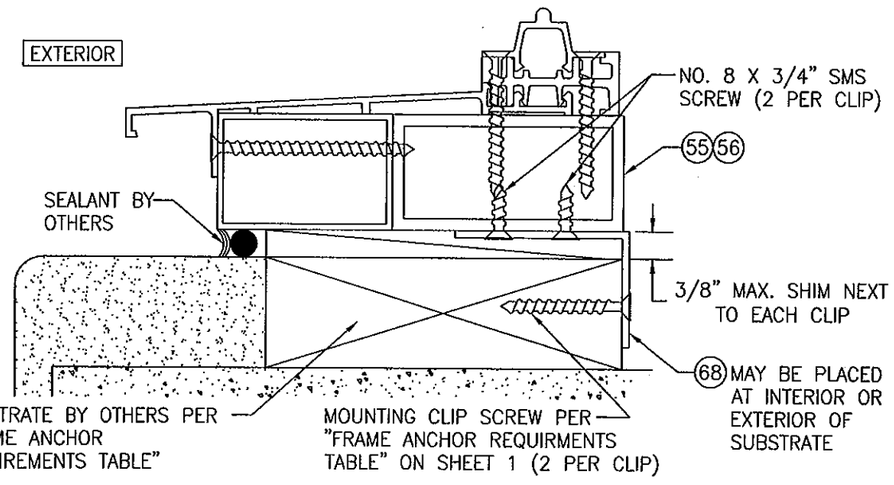


OPTIONAL MOUNTING CLIP DETAIL AT 1 & 2 PANEL DEEP SILLS

(1 PANEL DEEP SILL SECTION SHOWN, 2 PANEL DEEP SILL IS INSTALLED THE SAME)
(FOR DETAIL NOT SHOWN, SEE OTHER SECTIONS)

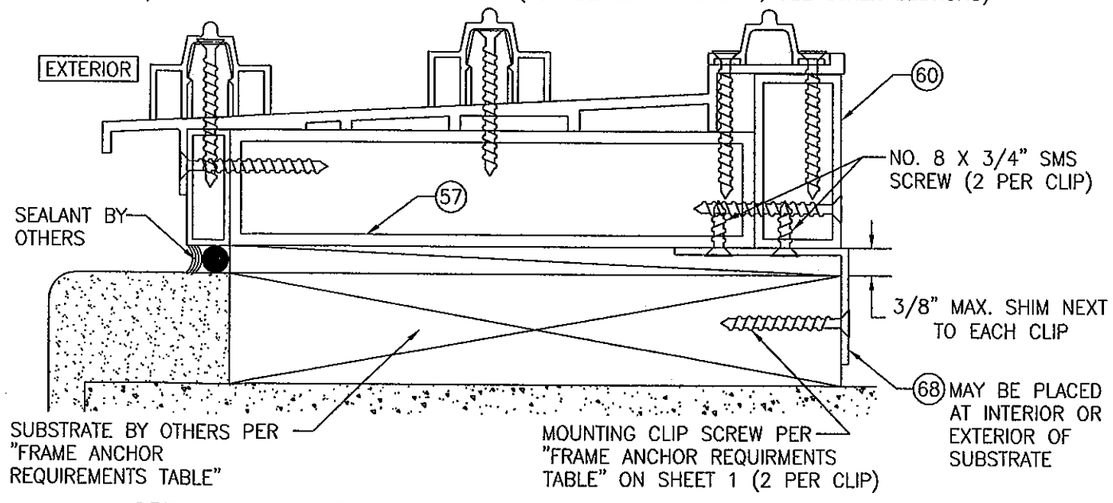


OPTIONAL MOUNTING CLIP DETAIL AT 3 & 4 PANEL DEEP SILLS

(3 PANEL DEEP SILL SECTION SHOWN, 4 PANEL DEEP SILL IS INSTALLED THE SAME)
(FOR DETAIL NOT SHOWN, SEE OTHER SECTIONS)

| DRAWN BY: W.R.M. | CHECKED BY: W.W.S. |
|---|---|
| PLOT: 1=24 | DATE: 01/23/09 |

| NO. | REVISION DESCRIPTION | BY | DATE |
|---|---|---|---|

DRAWING TITLE
LIFT & SLIDE BRONZE CLAD SLIDING GLASS IMPACT DOORS

MANUFACTURER
PEETZ WINDOWS & DOORS
15951 S.W. 41ST STREET; SUITE 150
WESTON, FL 33331
954-659-3887

CONSULTANTS
W. W. SCHAEFER ENGINEERING CONSULTING, P.A. (CA 6809)
7480 150TH COURT NORTH
PALM BEACH GARDENS, FL 33418
PHONE: 561-744-3424

CERTIFICATION
WARREN W. SCHAEFER
LICENSED
No. 44135
PROFESSIONAL ENGINEER
FLORIDA

| DRAWING NO. | REV. |
|---|---|
| 1632 | A |

SHEET NO. 26 OF 31

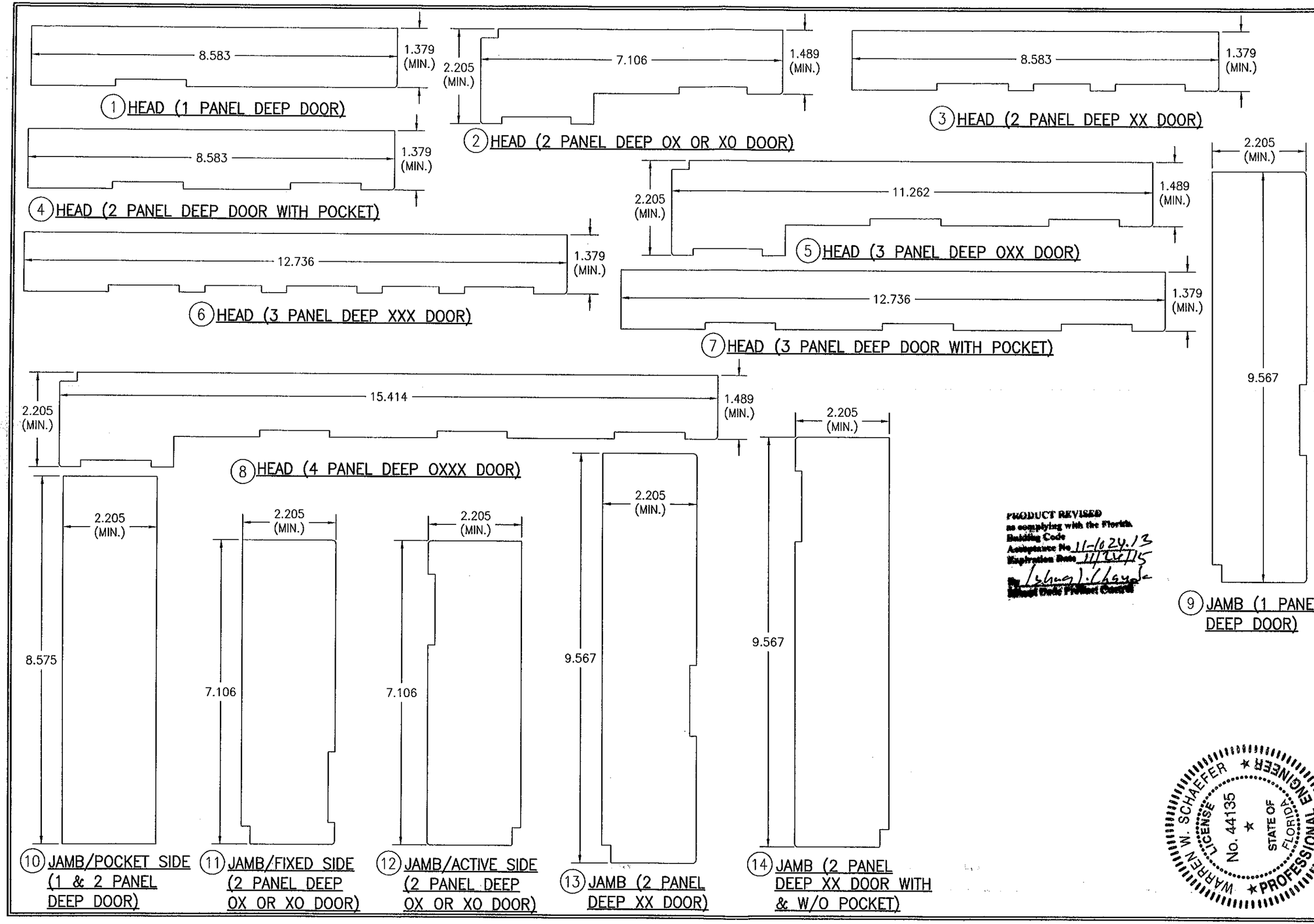


PRODUCT REVISED
as complying with the Florida
Building Code
Acceptance No 11-1024.13
Expiration Date 11/24/15
By [signature]
Miami Dade Product Control

WARREN W. SCHAEFER
LICENSE
No. 44135
STATE OF FLORIDA
PROFESSIONAL ENGINEER

| DRAWN BY: W.R.M. | CHECKED BY: W.W.S. |
|---|---|
| PLOT: 1=24 | DATE: 01/23/09 |

| NO. | REVISION DESCRIPTION | BY | DATE |
|---|---|---|---|

DRAWING TITLE
LIFT & SLIDE BRONZE CLAD SLIDING GLASS IMPACT DOORS

MANUFACTURER
PEETZ WINDOWS & DOORS
15951 S.W. 41ST STREET; SUITE 150
WESTON, FL 33331
954-659-3887

CONSULTANTS
W. W. SCHAEFER ENGINEERING & CONSULTING, P.A. (CA 6809)
7480 150TH COURT NORTH
PALM BEACH GARDENS, FL 33418
PHONE: 561-744-3424

CERTIFICATION
OCT 19 2011
WARREN W. SCHAEFER, P.E.
P.E. NO. 44135

DRAWING NO. 1632
REV. A
SHEET NO. 27 OF 31

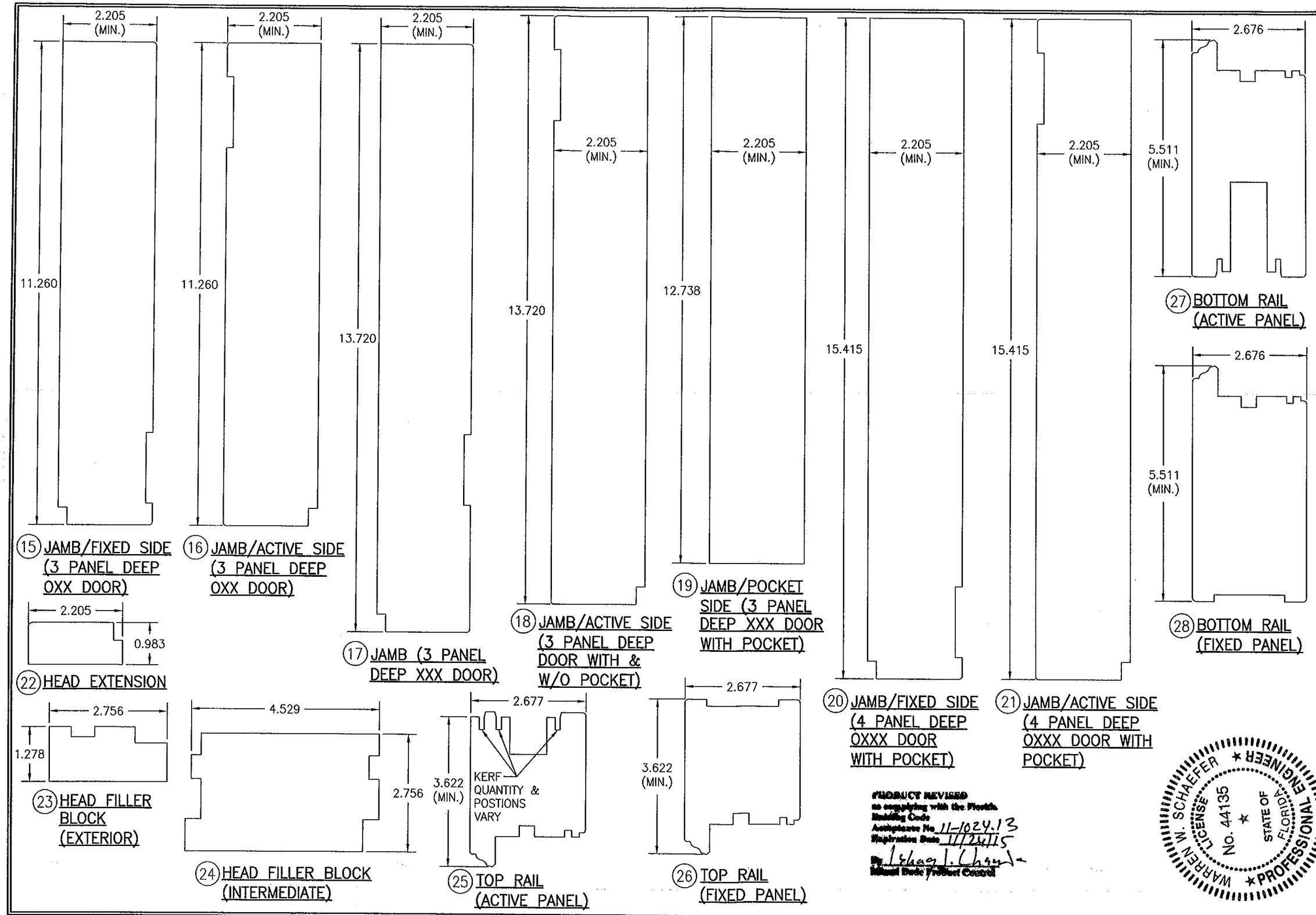


PRODUCT REVISED
as complying with the Florida Building Code
Acceptance No. 11-1024.13
Expiration Date 11/24/15
By Ishaq J. Chaudhary
Miami Dade Product Control

WARREN W. SCHAEFER ★ LICENSE No. 44135 ★ STATE OF FLORIDA ★ PROFESSIONAL ENGINEER

| DRAWN BY: W.R.M. | CHECKED BY: W.W.S. |
|---|---|
| PLOT: 1=24 | DATE: 01/23/09 |

| NO. | REVISION DESCRIPTION | BY | DATE |
|---|---|---|---|
| | | | |

DRAWING TITLE
LIFT & SLIDE BRONZE CLAD SLIDING GLASS IMPACT DOORS

MANUFACTURER
PEETZ WINDOWS & DOORS
15951 S.W. 41ST STREET; SUITE 150
WESTON, FL 33331
954-659-3887

CONSULTANTS
W. W. SCHAEFER ENGINEERING & CONSULTING, P.A. (CA 6809)
7480 150TH COURT NORTH
PALM BEACH GARDENS, FL 33418
PHONE: 561-744-3424

CERTIFICATION
OCT 19 2011
WARREN W. SCHAEFER, P.E.
P.E. NO. 44135

DRAWING NO. 1632 | REV. A

SHEET NO. 28 OF 31

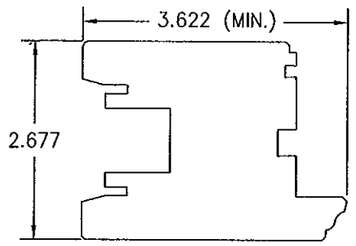


29 STILE (ACTIVE PANEL)

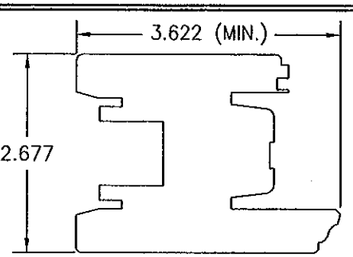


30 MEETING STILE

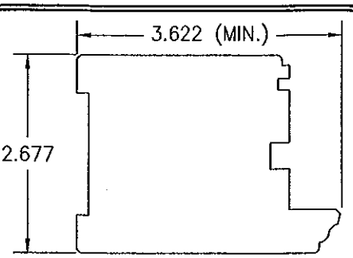


32 STILE (FIXED PANEL)

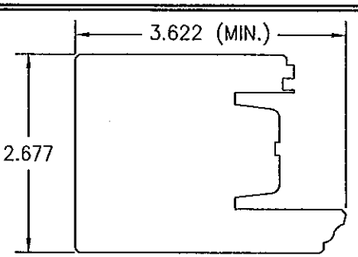


33 INTERLOCK STILE

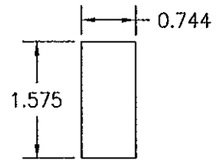


35 SILL BASE EXTENSION (1 PANEL DEEP WITH POCKET)

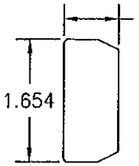


36 LOCKING BOLT BLOCK

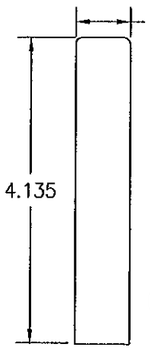


37 POCKET COVER

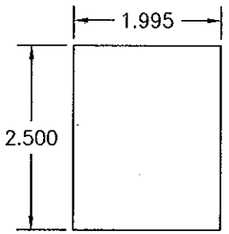


38 POCKET COVER SUPPORT BLOCK

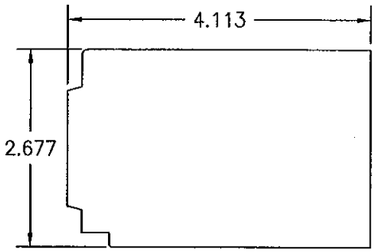


39 POCKET STILE EXTENSION

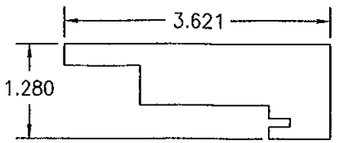


40 ACTIVE INTERLOCK POCKET ASTRAGAL

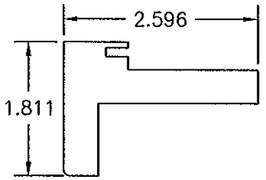


41 FIXED INTERLOCK POCKET ASTRAGAL

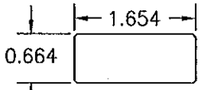


42 CONTINUOUS KEY

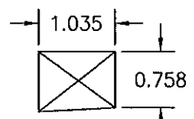


43 FIXED SILL BLOCKING

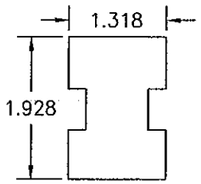


44 TRACK BRIDGING

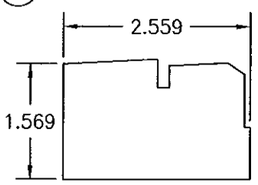


45 SILL BASE EXTENSION (2 PANEL DEEP DOOR WITH POCKET)

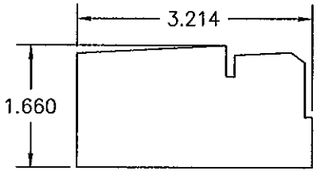


46 SILL BASE EXTENSION (3 PANEL DEEP DOOR WITH POCKET)

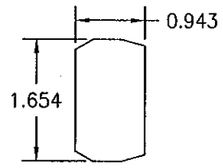


47 DECORATIVE CAP

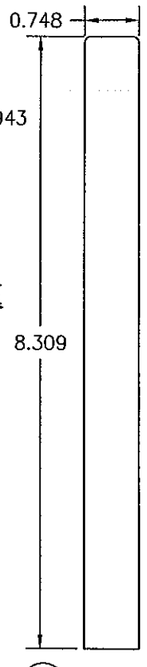


48 POCKET COVER

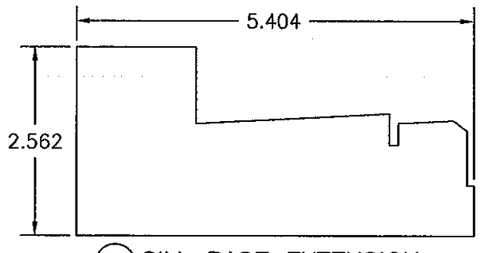


49 SILL BASE EXTENSION (4 PANEL DEEP DOOR)

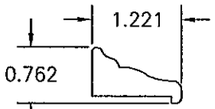


50 NON-I.G. GLAZING BEAD

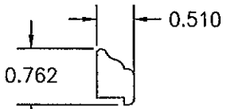


51 I.G. GLAZING BEAD

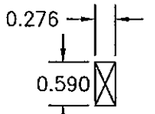


52 SILL RAIL CLADDING BLOCK

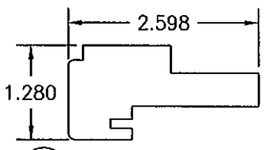


53 ACTIVE INTERLOCK ASTRAGAL

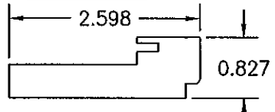


54 ACTIVE INTERLOCK ASTRAGAL

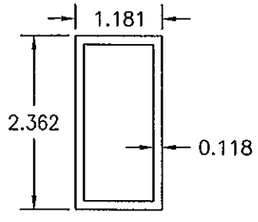


60 INTERIOR SILL BASE EXTENSION (3 & 4 PANEL DEEP DOORS)

PRODUCT REVISED
as complying with the Florida
Building Code
Acceptance No. 11-1024.13
Expiration Date 11/24/15
By: Khan J. Chan
Product Control

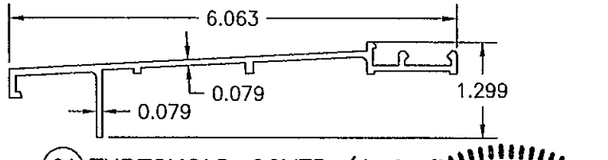


61 THRESHOLD COVER (1 & 2 PANEL DEEP DOORS)

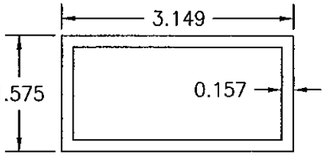


55 SILL BASE (1 PANEL DEEP DOOR)

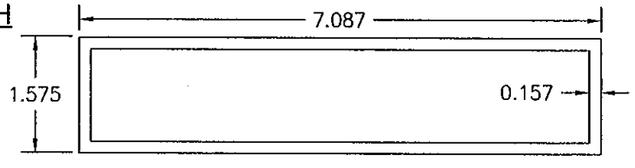


57 SILL BASE (3 & 4 PANEL DEEP DOORS)

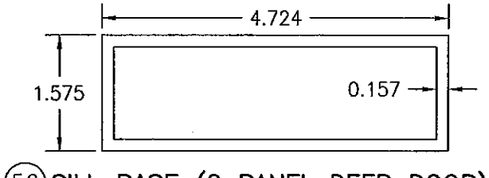


56 SILL BASE (2 PANEL DEEP DOOR)

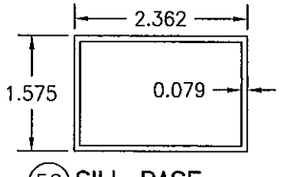


58 SILL BASE EXTENSION (1 PANEL DEEP DOOR)

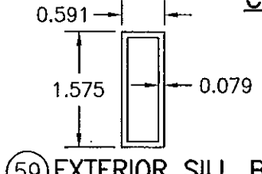


59 EXTERIOR SILL BASE EXTENSION (2, 3 & 4 PANEL DEEP DOORS)

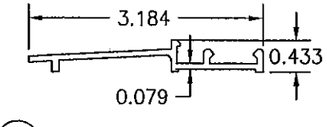


62 THRESHOLD COVER (1 PANEL DEEP DOORS WITH POCKET)

WARREN W. SCHAEFER LICENSE No. 44135 STATE OF FLORIDA PROFESSIONAL ENGINEER

| DRAWN BY: W.R.M. | CHECKED BY: W.W.S. |
|---|---|
| PLOT: 1=24 | DATE: 01/23/09 |

| NO. | REVISION DESCRIPTION | BY | DATE |
|---|---|---|---|
| | | | |

DRAWING TITLE
LIFT & SLIDE BRONZE CLAD SLIDING GLASS IMPACT DOORS

MANUFACTURER
PEETZ WINDOWS & DOORS
15951 S.W. 41ST STREET; SUITE 150
WESTON, FL 33331
954-659-3887

CONSULTANTS
W. W. SCHAEFER ENGINEERING & CONSULTING, P.A. (CA 6809)
7480 150TH COURT NORTH
PALM BEACH GARDENS, FL 33418
PHONE: 561-744-3424

CERTIFICATION
OCT 19 2011
WARREN W. SCHAEFER, P.E.
P.E. NO. 44135

| DRAWING NO. | REV. |
|---|---|
| 1632 | A |

SHEET NO.
29 OF 31

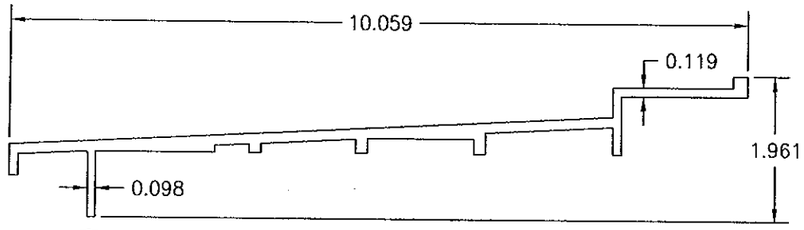


63 THRESHOLD COVER (3 & 4 PANEL DEEP DOORS)

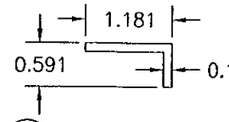


64 GUIDING RAIL SUPPORT BRACKET

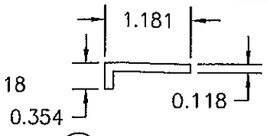


65 GUIDING RAIL SUPPORT BRACKET

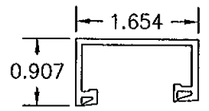


66 SILL TRACK (FIXED PANEL)

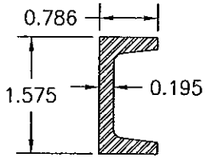


67 STILE REINFORCEMENT

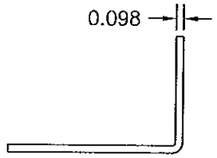


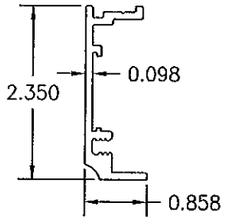


112 FRAME CLADDING

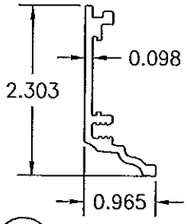


113 ACTIVE TOP RAIL & BOTTOM RAIL EXTENSION CLADDING

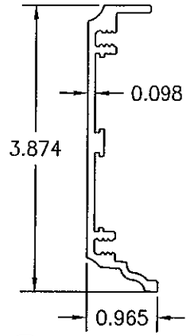


114 FIXED TOP RAIL & STILE CLADDING

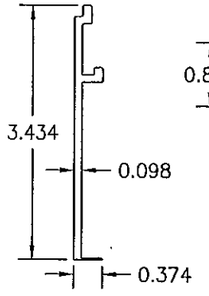


115 BOTTOM RAIL CLADDING

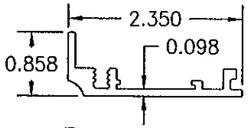


116 POCKET CLADDING

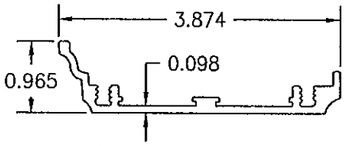


117 POCKET STILE CLADDING

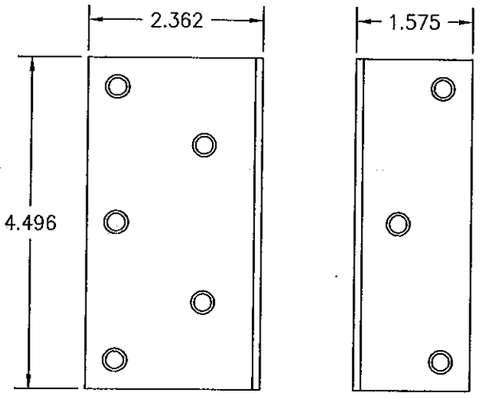


68 MOUNTING CLIP

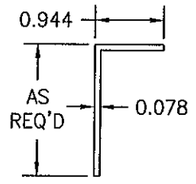


120 POCKET INTERLOCK SKIN CLADDING

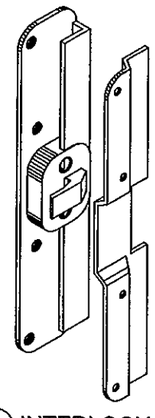

84 INTERLOCK

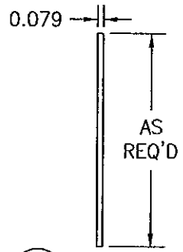


118 JAMB SKIN CLADDING

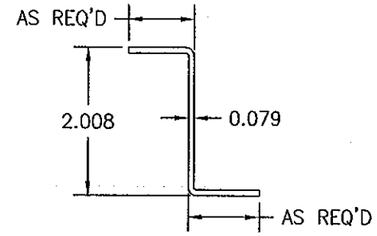


119 HEAD SKIN CLADDING

PRODUCT REVISED
in complying with the Florida
Building Code
Acceptance No. 11-1024.13
Expiration Date 11/24/15
By Shang J. Chang
Miami-Dade Product Control

WARREN W. SCHAEFER LICENSE No. 44135 STATE OF FLORIDA PROFESSIONAL ENGINEER

| DRAWN BY: W.R.M. | CHECKED BY: W.W.S. |
|---|---|
| PLOT: 1=24 | DATE: 01/23/09 |

| NO. | REVISION DESCRIPTION | BY | DATE |
|---|---|---|---|
| | | | |

DRAWING TITLE
LIFT & SLIDE BRONZE CLAD SLIDING GLASS IMPACT DOORS

MANUFACTURER
PEETZ WINDOWS & DOORS
15951 S.W. 41ST STREET; SUITE 150
WESTON, FL 33331
954-659-3887

CONSULTANTS
W. W. SCHAEFER ENGINEERING & CONSULTING, P.A. (CA 6809)
7480 150TH COURT NORTH
PALM BEACH GARDENS, FL 33418
PHONE: 561-744-3424

CERTIFICATION
OCT 19 2011
WARREN W. SCHAEFER, P.E. NO. 44135

| DRAWING NO. | REV. |
|---|---|
| 1632 | A |

SHEET NO.
30 OF 31

| ITEM # | ITEM DESCRIPTION | MANUFACTURER/NOTES |
|---|---|---|
| | WOOD & MISCELLANEOUS PARTS | |
| 1 | HEAD (1 PANEL DEEP DOOR) | MAHOGANY |
| 2 | HEAD (2 PANEL DEEP OX OR XO DOOR) | MAHOGANY |
| 3 | HEAD (2 PANEL DEEP XX DOOR) | MAHOGANY |
| 4 | HEAD (2 PANEL DEEP DOOR WITH POCKET) | MAHOGANY |
| 5 | HEAD (3 PANEL DEEP OXX DOOR) | MAHOGANY |
| 6 | HEAD (2 PANEL DEEP XXX DOOR) | MAHOGANY |
| 7 | HEAD (2 PANEL DEEP DOOR WITH POCKET) | MAHOGANY |
| 8 | HEAD (4 PANEL DEEP OXXX DOOR) | MAHOGANY |
| 9 | JAMB (1 PANEL DEEP DOOR) | MAHOGANY |
| 10 | JAMB/POCKET SIDE (1 & 2 PANEL DEEP DOOR) | MAHOGANY |
| 11 | JAMB/FIXED SIDE (2 PANEL DEEP OX OR XO DOOR) | MAHOGANY |
| 12 | JAMB/ACTIVE SIDE (2 PANEL DEEP OX OR XO DOOR) | MAHOGANY |
| 13 | JAMB (2 PANEL DEEP XX DOOR) | MAHOGANY |
| 14 | JAMB (2 PANEL DEEP XX DOOR WITH POCKET) | MAHOGANY |
| 15 | JAMB/FIXED SIDE (3 PANEL DEEP OXX DOOR) | MAHOGANY |
| 16 | JAMB/ACTIVE SIDE (3 PANEL DEEP OXX DOOR) | MAHOGANY |
| 17 | JAMB (3 PANEL DEEP XXX DOOR) | MAHOGANY |
| 18 | JAMB/ACTIVE SIDE (3 PANEL DEEP XXX DOOR WITH POCKET) | MAHOGANY |
| 19 | JAMB/POCKET SIDE (3 PANEL DEEP XXX DOOR WITH POCKET) | MAHOGANY |
| 20 | JAMB/FIXED SIDE (4 PANEL DEEP OXXX DOOR WITH POCKET) | MAHOGANY |
| 21 | JAMB/ACTIVE SIDE (4 PANEL DEEP OXXX DOOR WITH POCKET) | MAHOGANY |
| 22 | HEAD EXTENSION | MAHOGANY |
| 23 | HEAD FILLER BLOCK (EXTERIOR) | MAHOGANY |
| 24 | HEAD FILLER BLOCK (INTERMEDIATE) | MAHOGANY |
| 25 | TOP RAIL (ACTIVE PANEL) | MAHOGANY |
| 26 | TOP RAIL (FIXED PANEL) | MAHOGANY |
| 27 | BOTTOM RAIL (ACTIVE PANEL) | MAHOGANY |
| 28 | BOTTOM RAIL (FIXED PANEL) | MAHOGANY |
| 29 | STILE (ACTIVE PANEL) | MAHOGANY |
| 30 | MEETING STILE | MAHOGANY |
| 32 | STILE (FIXED PANEL) | MAHOGANY |
| 33 | INTERLOCK STILE | MAHOGANY |
| 34 | MIN. 1" THICK POCKET COVER (OVERALL SIZE PER POCKET REQUIREMENTS) | PLYWOOD |
| 35 | SILL BASE EXTENSION (1 PANEL DEEP WITH POCKET) | MAHOGANY |
| 36 | LOCKING BOLT BLOCK | MAHOGANY |
| 37 | POCKET COVER | MAHOGANY |
| 38 | POCKET COVER SUPPORT BLOCK | MAHOGANY |
| 39 | POCKET STILE EXTENSION | MAHOGANY |
| 40 | ACTIVE INTERLOCK ASTRAGAL | MAHOGANY |
| 41 | FIXED INTERLOCK ASTRAGAL | MAHOGANY |
| 42 | CONTINUOUS KEY | MAHOGANY |
| 43 | FIXED SILL BLOCKING | MAHOGANY |
| 44 | TRACK BRIDGING | MAHOGANY |
| 45 | SILL BASE EXTENSION (2 PANEL DEEP DOOR WITH POCKET) | MAHOGANY |
| 46 | SILL BASE EXTENSION (3 PANEL DEEP DOOR WITH POCKET) | MAHOGANY |
| 47 | DECORATIVE CAP | MAHOGANY |
| 48 | POCKET COVER | MAHOGANY |
| 49 | SILL BASE EXTENSION (4 PANEL DEEP DOOR) | MAHOGANY |
| 50 | NON-I.G. GLAZING BEAD | MAHOGANY |
| 51 | I.G. GLAZING BEAD | MAHOGANY |
| 52 | SILL RAIL CLADDING BLOCK | MAHOGANY |
| 53 | ACTIVE INTERLOCK ASTRAGAL | MAHOGANY |
| 54 | ACTIVE INTERLOCK ASTRAGAL | MAHOGANY |
| 55 | SILL BASE (1 PANEL DEEP DOOR) | 6063-T5 ALUMINUM |
| 56 | SILL BASE (2 PANEL DEEP DOOR) | 6063-T5 ALUMINUM |
| 57 | SILL BASE (3 & 4 PANEL DEEP DOORS) | 6063-T5 ALUMINUM |

WOOD USED IN TESTING WAS MAHOGANY WITH A SPECIFIC GRAVITY OF G = 0.46 AND A MODULUS OF ELASTICITY OF E = 1,500,000 PSI. OTHER WOOD SPECIES APPLICABLE FOR USE WITH THIS PRODUCT ARE THOSE WITH A SPECIFIC GRAVITY OF 0.46 AND MODULUS OF ELASTICITY OF 1,500,000 PSI OR GREATER. ALL WOOD IS MINIMUM GRADE 2 MILLED BY PEETZ WINDOWS & DOORS TO SELECT.

| ITEM # | ITEM DESCRIPTION | MANUFACTURER/NOTES |
|---|---|---|
| | WOOD & MISCELLANEOUS PARTS | |
| 58 | SILL BASE EXTENSION (1 PANEL DEEP DOOR) | 6063-T5 ALUMINUM |
| 59 | EXTERIOR SILL BASE EXTENSION (2, 3 & 4 PANEL DEEP DOORS) | 6063-T5 ALUMINUM |
| 60 | INTERIOR SILL BASE EXTENSION (3 & 4 PANEL DEEP DOORS) | 6063-T5 ALUMINUM |
| 61 | THRESHOLD COVER (1 & 2 PANEL DEEP DOORS) | BRONZE OR 6063-T5 ALUMINUM |
| 62 | THRESHOLD COVER (1 PANEL DEEP DOORS WITH POCKET) | BRONZE OR 6063-T5 ALUMINUM |
| 63 | THRESHOLD COVER (3 & 4 PANEL DEEP DOORS) | BRONZE OR 6063-T5 ALUMINUM |
| 64 | GUIDING RAIL SUPPORT BRACKET | 6063-T5 ALUMINUM |
| 65 | GUIDING RAIL SUPPORT BRACKET | 6063-T5 ALUMINUM |
| 66 | SILL TRACK (FIXED PANEL) | PVC |
| 67 | STILE REINFORCEMENT | GALVANIZED 34 KSI STEEL |
| 68 | MOUNTING CLIP | GALVANIZED 34 KSI STEEL |
| | HARDWARE | |
| 72 | ALUMINUM ROLLER TRACK | SUPPLIED WITH GU OR FFI HARDWARE |
| 73 | ALUMINUM ROLLER TRACK | SUPPLIED WITH GU OR FFI HARDWARE |
| 74 | ALUMINUM ROLLER TRACK | SUPPLIED WITH GU OR FFI HARDWARE |
| 75 | 2" LONG ROLLER TRACK CONNECTOR | WITHIN 3" OF ENDS & MAX. 12" O.C. |
| 76 | MALE GUIDING RAIL | GU #740 |
| 77 | INTERMEDIATE GUIDING RAIL | GU #741 |
| 78 | LIFT AND SLIDE DOOR HARDWARE | FFI #255JH OR GU #934 |
| 79 | LIFT AND SLIDE DOOR HARDWARE | FFI #255JH OR GU #934 |
| 80 | HANDLE | AS REQUIRED TO OPERATE LOCK/LIFT SLIDE SYSTEM |
| 81 | BUMPER | GU OR FFI |
| 82 | STOPPER | GU OR FFI |
| 83 | LOCKING BOLT | GU OR FFI |
| 84 | INTERLOCK | GU OR FFI |
| | SEALS & SEALANTS | |
| 88 | SASH GASKET | GU OR FFI |
| 89 | SASH GASKET | GU OR FFI |
| 90 | SOFT RUBBER SEALING BRIDGE | GU/FFI (SCREWED TO FRAME W/#6X7/8 SMS) |
| 91 | SOFT RUBBER SEALING BRIDGE | GU/FFI (SCREWED TO FRAME W/#6X7/8 SMS) |
| 92 | SOFT RUBBER SEALING PIECE | GU/FFI (GLUED ONTO RUNNING RAIL) |
| 93 | SOFT RUBBER SEALING PIECE | GU/FFI (GLUED ONTO RUNNING RAIL) |
| 94 | 3/8" X 3/16" PRECOMPRESSED TAPE | AS REQ'D |
| | FASTENERS | |
| 96 | NO. 8 X 1 3/4" WOOD SCREW | WITHIN 6" OF ENDS & 24" MAX. O.C. |
| 97 | NO. 8 X 1 3/8" S.S. WOOD SCREW | WITHIN 4" OF CORNERS & 12" MAX. O.C. |
| 98 | NO. 8 X 1 3/8" S.S. WOOD SCREW | WITHIN 2" OF CORNERS & 8" MAX. O.C. |
| 99 | NO. 8 X 2" S.S. SMS SCREW | WITHIN 4" OF CORNERS & 12" MAX. O.C. |
| 100 | NO. 12 X 2 3/4" S.S. WOOD SCREW | WITHIN 4" OF CORNERS & 6" MAX. O.C. |
| 101 | NO. 12 S.S. SMS SCREW (LENGTH AS REQ'D TO PENETRATE ALUMINUM SILL BASE) | WITHIN 4" OF CORNERS & 6" MAX. O.C. |
| 102 | NO. 8 X 1 3/4" S.S. SCREW | WITHIN 6" OF CORNERS & 17" MAX. O.C. |
| 103 | NO. 14 X 3 3/4" WOOD SCREW | WITHIN 4" OF CORNERS & 14" MAX. O.C. |
| 104 | NO. 14 X 5" WOOD SCREW | WITHIN 4" OF CORNERS & 14" MAX. O.C. |
| 105 | NO. 14 X 4 3/4" WOOD SCREW | WITHIN 5 1/2" OF CORNERS & 10" MAX. O.C. |
| 106 | 18 GA. X 1 1/4" GALV. CURVED NAIL | WITHIN 10" OF CORNERS & 20" MAX. O.C. |
| 107 | NO. 6 X 5/8" WOOD SCREW | WITHIN 4 OF CORNERS & 20" MAX. O.C. |
| 108 | NO. 12 X 7/8" SELF TAPPING SCREW | WITHIN 4 OF CORNERS & 14" MAX. O.C. |
| 109 | 3/16" X 1 9/16 SELF TAP/DRILLING SCREW | 2 PER TRACK CONNECTOR |
| 110 | NO. 8 X 2 3/4" S.S. SMS SCREW | WITHIN 4" OF CORNERS & 12" MAX. O.C. |
| 111 | m4 X 1 3/8" MACHINE SCREW & NUT | WITHIN 4" OF CORNERS & 12" MAX. O.C. |
| | CLAD PARTS | |
| 112 | SILL BASE (1 PANEL DEEP DOOR) | BRONZE OR 6063-T5 ALUMINUM |
| 113 | SILL BASE (2 PANEL DEEP DOOR) | BRONZE OR 6063-T5 ALUMINUM |
| 114 | SILL BASE (3 & 4 PANEL DEEP DOORS) | BRONZE OR 6063-T5 ALUMINUM |
| 115 | SILL BASE EXTENSION (1 PANEL DEEP DOOR) | BRONZE OR 6063-T5 ALUMINUM |
| 116 | SILL BASE (1 PANEL DEEP DOOR) | BRONZE OR 6063-T5 ALUMINUM |
| 117 | SILL BASE (2 PANEL DEEP DOOR) | BRONZE OR 6063-T5 ALUMINUM |
| 118 | SILL BASE (3 & 4 PANEL DEEP DOORS) | BRONZE OR 6063-T5 ALUMINUM |
| 119 | SILL BASE EXTENSION (1 PANEL DEEP DOOR) | BRONZE OR 6063-T5 ALUMINUM |
| 120 | SILL BASE EXTENSION (1 PANEL DEEP DOOR) | BRONZE OR 6063-T5 ALUMINUM |

PRODUCT REVISED
to complying with the Florida Building Code
Acceptance No. 11-1024.13
Expiration Date 11/24/15
By: Ishaq I. Chanda
Miami-Dade Product Control

DRAWN BY: W.R.M. | CHECKED BY: W.W.S.
PLOT: 1=24 | DATE: 01/23/09

| NO. | REVISION DESCRIPTION | BY | DATE |
|---|---|---|---|

DRAWING TITLE
LIFT & SLIDE BRONZE CLAD SLIDING GLASS IMPACT DOORS

MANUFACTURER
PEETZ WINDOWS & DOORS
15951 S.W. 41ST STREET; SUITE 150
WESTON, FL 33331
954-659-3887

CONSULTANTS
W. W. SCHAEFER ENGINEERING & CONSULTING, P.A. (CA 6809)
7480 150TH COURT NORTH
PALM BEACH GARDENS, FL 33418
PHONE: 561-744-3424

CERTIFICATION
OCT 19 2011
WARREN W. SCHAEFER, P.E.
P.E. NO. 44135

WARREN W. SCHAEFER ★ ENGINEER ★ No. 44135 ★ STATE OF FLORIDA ★ PROFESSIONAL ENGINEER

DRAWING NO. 1632 | REV. A
SHEET NO. 31 OF 31