MIAMI-DADE COUNTY
DEPARTMENT OF PERMITTING, ENVIRONMENT, AND REGULATORY AFFAIRS (PERA)
BOARD AND CODE ADMINISTRATION DIVISION

NOTICE OF ACCEPTANCE (NOA)

MIAMI-DADE COUNTY
PRODUCT CONTROL SECTION
11805 SW 26 Street, Room 208
Miami, Florida 33175-2474
T (786) 315-2590 F (786) 315-2599
www.miamidade.gov/pera/

Peetz Windows and Doors, Inc.
15951 S.W. 41 Street, Suite 150
Weston, FL 33331

SCOPE:

This NOA is being issued under the applicable rules and regulations governing the use of construction materials. The documentation submitted has been reviewed and accepted by Miami-Dade County PERA -Product Control Section to be used in Miami Dade County and other areas where allowed by the Authority Having Jurisdiction (AHJ).

This NOA shall not be valid after the expiration date stated below. The Miami-Dade County Product Control Section (In Miami Dade County) and/or the AHJ (in areas other than Miami Dade County) reserve the right to have this product or material tested for quality assurance purposes. If this product or material fails to perform in the accepted manner, the manufacturer will incur the expense of such testing and the AHJ may immediately revoke, modify, or suspend the use of such product or material within their jurisdiction. PERA reserves the right to revoke this acceptance, if it is determined by Miami-Dade County Product Control Section that this product or material fails to meet the requirements of the applicable building code.
This product is approved as described herein, and has been designed to comply with the Florida Building Code, including the High Velocity Hurricane Zone.

DESCRIPTION: Series "Lift & Slide" Wood Sliding Glass Doors – L.M.I.

APPROVAL DOCUMENT: Drawing No. **1321 Rev B**, titled "Lift & Slide Wood Sliding Glass Impact Doors", sheets 1 through 31 of 31, dated 03/18/05 and last revised on OCT 19, 2011, prepared by W. W. Schafer Engineering & Consulting, P. A., signed and sealed by Warren W. Schafer, P. E., bearing the Miami-Dade County Product Control Revision stamp with the Notice of Acceptance number and Expiration date by the Miami-Dade County Product Control Section.

MISSILE IMPACT RATING: Large and Small Missile Impact Resistant

Limitation:

1. Pocket walls are under separate approval.
2. Maximum Panel O.C. width not to exceed 61.5". Min two (2) intermediate anchors are required for panel OC width between 48" to 61.5".
3. Use of ¼" Powers Rawl Tapper (410 SS) in CMU (Side Jambs) is <u>not</u> applicable.

LABELING: Each unit shall bear a permanent label with the manufacturer's name or logo, Kall/Eifel, Germany and series and following statement: "Miami-Dade County Product Control Approved", unless otherwise noted herein.

RENEWAL of this NOA shall be considered after a renewal application has been filed and there has been no change in the applicable building code negatively affecting the performance of this product.

TERMINATION of this NOA will occur after the expiration date or if there has been a revision or change in the materials, use, and/or manufacture of the product or process. Misuse of this NOA as an endorsement of any product, for sales, advertising or any other purposes shall automatically terminate this NOA. Failure to comply with any section of this NOA shall be cause for termination and removal of NOA.

ADVERTISEMENT: The NOA number preceded by the words Miami-Dade County, Florida, and followed by the expiration date may be displayed in advertising literature. If any portion of the NOA is displayed, then it shall be done in its entirety.

INSPECTION: A copy of this entire NOA shall be provided to the user by the manufacturer or its distributors and shall be available for inspection at the job site at the request of the Building Official.

This NOA **revises NOA # 10-0504.02** and consists of this page 1 and evidence pages E-1, as well as approval document mentioned above.
The submitted documentation was reviewed by **Ishaq I. Chanda, P.E.**

MIAMI-DADE COUNTY APPROVED
11/29/11

NOTICE OF ACCEPTANCE: EVIDENCE SUBMITTED

A. DRAWINGS (transferred from file # **10-0504.03**)

1. Manufacturer's die drawings and sections.
2. Drawing No. **1321 Rev B**, titled "Lift & Slide Wood Sliding Glass Impact Doors", sheets 1 through 31 of 31, dated 03/18/05 and last revised on OCT 19, 2011, prepared by W. W. Schafer Engineering & Consulting, P. A., signed and sealed by Warren W. Schafer, P.E.

(Note: The revision consist of compliance to FBC 2010 only)

B. TESTS (transferred from file # **10-0504.03**)

1. Test reports on: 1) Air Infiltration Test, per FBC, TAS 202-94
   2) Uniform Static Air Pressure Test, Loading per FBC TAS 202-94
   3) Water Resistance Test, per FBC, TAS 202-94
   4) Large Missile Impact Test per FBC, TAS 201-94
   5) Cyclic Wind Pressure Loading per FBC, TAS 203-94
   6) Forced Entry Test, per FBC 2411 3.2.1, TAS 202-94

Along with marked-up drawings and installation diagram of Lift and Slider with pocket, prepared by Hurricane Test Laboratory, LLC, Test Report No. **HTL–0284–1009–07**, dated 09/29/08, **HTL–0284–0526–03**, dated 03/14/2005, **HTL–0284–1018–04**, dated 03/14/2005, **HTL–0284–1205–04**, dated 03/14/2005, and **HTL–0284–1113–01**, dated 03/14/2005, all signed and sealed by Vinu J. Abraham, P. E.

C. CALCULATIONS

1. Statement letters of conformance to FBC 2010, dated OCT 19, 2011, prepared by W. W. Schafer Engineering & Consulting, P. A., signed and sealed by Warren W. Schafer, P.E.
2. Anchor verification calculations complying w/ FBC-2007, dated 02-22-09, prepared, signed and sealed by Warren W. Schafer, P.E. (transferred from file # **10-0504.03**)
3. Glazing complies with ASTME-1300-02 &-04

D. QUALITY ASSURANCE

1. Miami Dade Department of Permitting, Environment, and Regulatory Affairs (PERA).

E. MATERIAL CERTIFICATIONS

1. Notice of Acceptance No. **08-1224.04** issued to Solutia, for "**Saflex Composite Glass Interlayer w/ PET**", expiring on 12/11/2013.
2. Notice of Acceptance No. **11-0325.05** issued to Solutia Inc. for "**Saflex Clear or colored interlayer**", expiring on May 21, 2016.

F. STATEMENTS

1. Statement letters of conformance to FBC 2010, dated OCT 19, 2011, prepared by W. W. Schafer Engineering & Consulting, P. A., signed and sealed by Warren W. Schafer, P.E.
2. Statement letters of conformance to FBC 2007 and "No financial interest", both dated February 23, 2009, prepared by W. W. Schafer Engineering & Consulting, P. A., signed and sealed by Warren W. Schafer, P.E.(transferred from file # **10-0504.03**)
3. Statement of compliance, issued as part of the above referenced test reports.
4. Distributor Agreement documents in conformance to BCCO guidelines dated April 23, 2009 signed by Christian Peetz, President of Helmut Peetz, GmbH, and by Eva Leon, V. P. of Peetz Windows And Doors, Inc.

G. OTHER

1. This NOA **revises** NOA # **10-0504.03**, expiring on 11/24/15.
2. Test Proposals # **06-0091**, approved by BCCO.

Ishaq I. Chanda

Ishaq I. Chanda, P.E.
Product Control Examiner
NOA No 11-1024.14
Expiration Date: November 24, 2015
Approval Date: December 08, 2011

GENERAL NOTES:

1. THESE DOOR SYSTEMS HAVE BEEN TESTED, ANALYZED & APPROVED FOR DESIGN PRESSURES NOT TO EXCEED THOSE SHOWN IN THE "ALLOWABLE DESIGN PRESSURE" TABLE(S).
2. OPENINGS, BUCKING & BUCKING FASTENERS MUST BE PROPERLY DESIGNED & INSTALLED TO TRANSFER WIND LOADS TO THE STRUCTURE.
3. ALL HARDWARE & FASTENERS SHALL BE IN ACCORDANCE WITH THESE DRAWINGS & SHALL NOT VARY UNLESS SPECIFICALLY MENTIONED ON THE DRAWINGS. SPECIFIED ANCHOR EMBED TO BASE MATERIAL SHALL BE BEYOND WALL FINISH OR STUCCO.
4. THE DETAILS & SPECIFICATIONS SHOWN HEREIN REPRESENT THE PRODUCTS TESTED & PROPOSED FOR WATER, AIR, IMPACT, CYCLIC & UNIFORM STATIC AIR PRESSURE TESTING IN CONFORMANCE WITH THE FLORIDA BUILDING CODE PROTOCALS TAS-201, 202 & 203 FOR LARGE MISSILE IMPACT DOORS.
5. THESE DOOR SYSTEMS HAVE BEEN DESIGNED IN ACCORDANCE WITH AND MEET THE REQUIREMENTS OF THE FLORIDA BUILDING CODE (FBC) INCLUDING HIGH VELOCITY HURRICANE ZONES (HVHZ).
6. IMPACT SHUTTERS ARE NOT REQUIRED WITH THESE DOORS.
7. ALL ANCHORS SECURING DOOR FRAME TO PRESSURE TREATED BUCKS OR WOOD FRAMING SHALL BE CAPABLE OF RESISTING CORROSION CAUSED BY THE PRESSURE TREATING CHEMICALS IN THE WOOD.
8. DETERMINE THE POSITIVE & NEGATIVE DESIGN LOADS TO USE WHEN REFERENCING THESE DOCUMENTS IN ACCORDANCE WITH THE GOVERNING CODE AND GOVERNING WIND VELOCITY. FOR WIND LOAD CALCULATIONS IN ACCORDANCE WITH THE FLORIDA BUILDING CODE, A DIRECTIONALITY FACTOR OF Kd = 0.85 MAY BE APPLIED PER THE ASCE 7 STANDARD.
9. NO INCREASE IN ALLOWABLE STRESS HAS BEEN USED IN THE CERTIFICATION OF THIS PRODUCT. WIND LOAD DURATION FACTOR Cd = 1.6 WAS USED FOR WOOD SCREW ANALYSIS ONLY.
10. MATERIALS, INCLUDING BUT NOT LIMITED TO STEEL SCREWS, THAT COME INTO CONTACT WITH OTHER DISSIMILAR MATERIALS SHALL MEET THE REQUIREMENTS OF FLORIDA BUILDING CODE CHAPTER 20.
11. All WOOD MEMBERS OF DOORS THAT MAY POSSIBLY COME INTO CONTACT WITH MASONRY OR CONCRETE SUBSTRATES, ARE SUBJECT TO MOISTURE &/OR ARE SUBJECT TO THE OUTSIDE ENVIRONMENT SHALL BE OF AN APPROVED DURABLE SPECIES OR BE TREATED IN AN APPROVED METHOD WITH AN APPROVED PRESERVATIVE PER FBC SECTION 2326.

LOCKING BOLT QUANTITY REQUIREMENTS

(1) SASH HEIGHT	QUANTITY PER PANEL
OVER 104 1/2"	5
89" TO 104 1/2"	4
LESS THAN 89"	3

(1) SASH HEIGHT DIMENSIONS ARE APPROXIMATELY 5" LESS THAN THE FRAME HEIGHT

INTERLOCK QUANTITY REQUIREMENTS

(1) SASH HEIGHT	QUANTITY PER PANEL
OVER 84 7/8"	4
LESS THAN 84 7/8"	3

(1) SASH HEIGHT DIMENSIONS ARE APPROXIMATELY 5" LESS THAN THE FRAME HEIGHT

ALLOWABLE DESIGN PRESSURE
(ALL DOOR CONDITIONS)
+/-70 PSF

PRODUCT REVISED
as complying with the Florida Building Code
Acceptance No. 11-1024.14
Expiration Date 11/24/2015
By Sherry L. Chandler
Miami-Dade/Product Control

FRAME ANCHOR REQUIREMENTS TABLE

(1) OPENING TYPE (SUBSTRATE)	FRAME/CLIP TO OPENING FASTENER TYPE	MINIMUM EMBED	MINIMUM EDGE DIST.
FRAME SCREWS			
MIN. 2X_ WOOD FRAME OR BUCK (MIN. GR. 3 & G=0.55)	1/4" CONCRETE SCREW	1 1/4"	1 1/2"
MIN. 16 GA. 33 KSI METAL STUD	1/4" GR. 5 SELF TAP/DRILL SCREW	FULL	1 1/2"
MIN. 1/8" THK A36 STEEL	1/4" GR. 5 SELF TAP/DRILL SCREW	FULL	1 1/2"
MIN. 1/8" THK 6063-T5 ALUM.	1/4" GR. 5 SELF TAP/DRILL SCREW	FULL	1 1/2"
(3) C-90 CMU/2500 PSI CONCRETE	(2) 1/4" CONCRETE SCREW	1 1/2"	2 1/2"
MOUNTING CLIP SCREWS			
MIN. 2X_ WOOD FRAME OR BUCK (MIN. GR. 3 & G=0.55)	NO. 8 X 1 1/2" SMS	1 3/8"	1/2"
MIN. 1/8" THK A36 STEEL	NO. 8 GR. 5 SELF TAP/DRILL SCREW	FULL	1/2"
MIN. 1/8" THK 6063-T5 ALUM.	NO. 8 GR. 5 SELF TAP/DRILL SCREW	FULL	1/2"

(1) SUPPORTING SUBSTRATE DEPTH SHALL BE SUCH THAT ALL DOOR FRAME/SILL MEMBER EDGES DO NOT EXTEND MORE THAN 1 1/2" PAST THE SUPPORTING SUBSTRATE EDGES.
(2) CONCRETE SCREWS SHALL BE ELCO ULTRACONS, ITW RAMSET/RED HEAD TAPCONS, HILTI KWIK-CON II OR POWERS RAWL TAPPER (HARDENED STEEL OR S.S.).
(3) CMU IS APPLICABLE AT SIDES ONLY (NOT AT HEAD OR SILL)

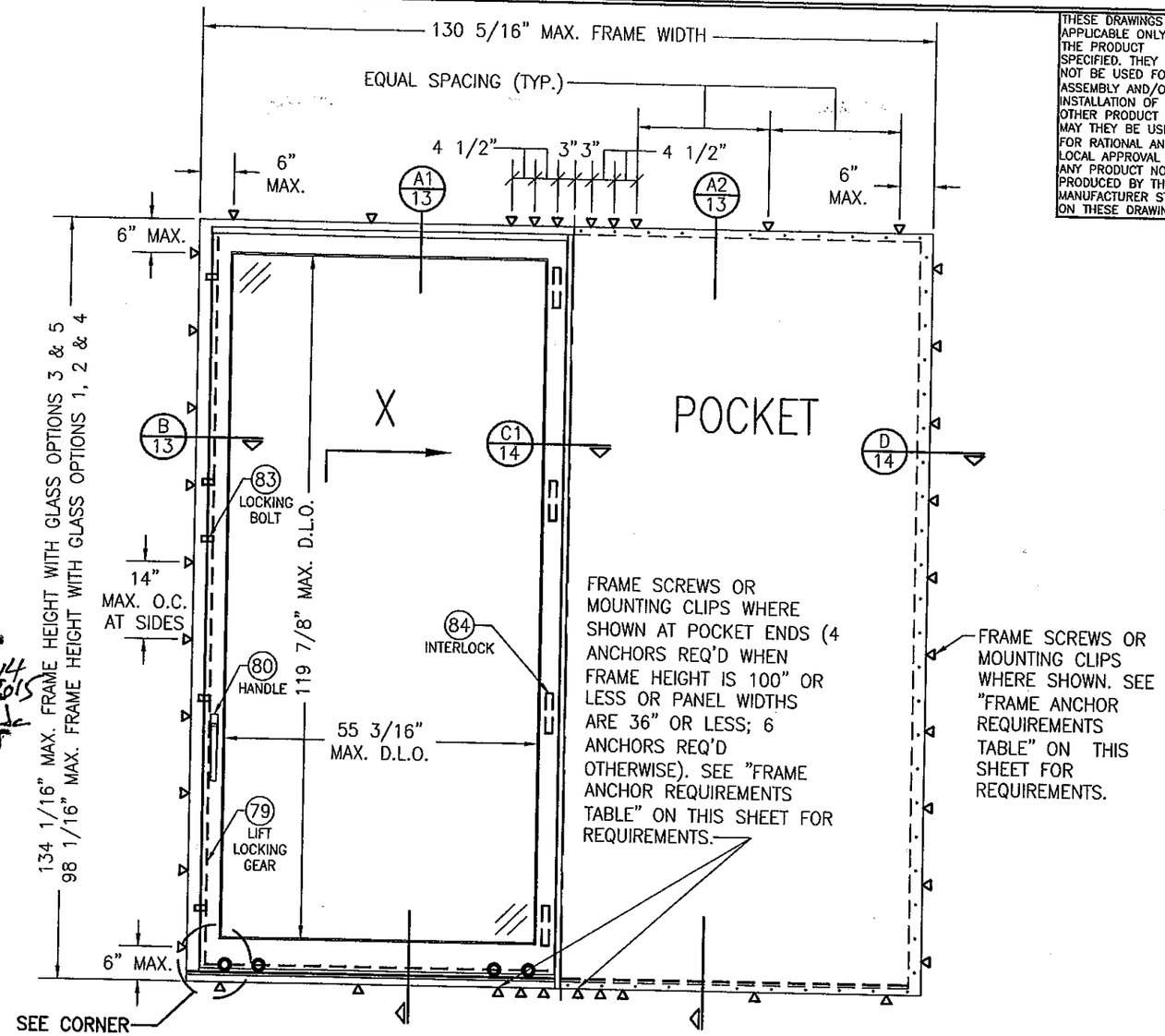

EXTERIOR ELEVATION:
1 PANEL DEEP X DOOR WITH POCKET
SCALE: 1/2" = 1'-0"

FOR SIMPLIFICATION, ONLY FRAME & SASH PROJECTION LINES ARE SHOWN FOR THESE ELEVATIONS

CORNER CONSTRUCTION:

FRAME HEAD: JAMB MEMBERS ARE COPED, BUTTED & JOINED TO HEAD WITH NO. 10" X 4 3/4" WOOD SCREWS & GLUED/SEALED WITH BINDAN D4; (6 SCREWS REQ'D WITH 4 & 3 PANEL DEEP FRAMES, 4 SCREWS REQ'D WITH 2 PANEL DEEP FRAMES & 3 SCREWS REQ'D WITH 1 PANEL DEEP FRAMES)

FRAME SILL OPTION 1: JAMB MEMBERS ARE COPED, BUTTED, JOINED TO SILL WITH M8 X 1 9/16" MACHINE SCREWS THRU THE SILL BASE INTO THE JAMB MEMBERS THREADED INSERT & SEALED WITH SG20 SILICONE (4 SCREWS REQ'D WITH 4 PANEL DEEP FRAMES; 3 SCREWS REQ'D WITH 3 PANEL DEEP FRAMES; 2 SCREWS REQ'D WITH 2 & 1 PANEL DEEP FRAMES).

FRAME SILL OPTION 2: JAMB MEMBERS ARE SQUARE CUT, BUTTED, JOINED TO SILL WITH M8 X 3 15/16" CYLINDER SCREWS THRU THE SILL BASE INTO THE JAMB MEMBERS DOWELS & SEALED WITH A RUBBER GASKET; (3 SCREWS REQ'D WITH 4 & 3 PANEL DEEP FRAMES; 2 SCREWS REQ'D WITH 2 & 1 PANEL DEEP FRAMES).

TOP RAIL TO STILE: MEMBERS ARE COPPED, BUTTED, JOINED WITH SIX(6) 0.394" X 3.150" DOWELS & GLUED/SEALED WITH BINDAN D4.

BOTTOM RAIL TO STILE: MEMBERS ARE COPPED, BUTTED, JOINED WITH TEN(10) 0.394" X 3.150" DOWELS & GLUED/SEALED WITH BINDAN D4.

WARREN W. SCHAEFER ★ ENGINEER ★ No. 44135 ★ STATE OF FLORIDA ★ PROFESSIONAL ENGINEER LICENSE

THESE DRAWINGS ARE APPLICABLE ONLY TO THE PRODUCT SPECIFIED. THEY MAY NOT BE USED FOR THE ASSEMBLY AND/OR INSTALLATION OF ANY OTHER PRODUCT NOR MAY THEY BE USED FOR RATIONAL AND/OR LOCAL APPROVAL OF ANY PRODUCT NOT PRODUCED BY THE MANUFACTURER STATED ON THESE DRAWINGS.

DRAWN BY: S.T.R.	CHECKED BY: W.W.S.
PLOT: 1=24	DATE: 3/18/05

NO.	REVISION DESCRIPTION	BY	DATE
A1	ADDED POCKET CONDITION & UPDATED ANCHOR CONDITION	W.R.M.	04/04/09
B1	CHANGE CONSULTANTS ADDRESS	W.R.M.	10/19/11

DRAWING TITLE: LIFT & SLIDE WOOD SLIDING GLASS IMPACT DOORS

MANUFACTURER: PEETZ WINDOWS & DOORS, 15951 S.W. 41ST STREET; SUITE 150, WESTON, FL 33331, 954-659-3887

CONSULTANTS: W. W. SCHAEFER ENGINEERING & CONSULTING, P.A. (CA 6809), 7480 150TH COURT NORTH, PALM BEACH GARDENS, FL 33418, PHONE: 561-744-3424

CERTIFICATION: OCT 19 2011 — WARREN W. SCHAEFER, P.E. P.E. NO. 44135

DRAWING NO. 1321 | REV. B

SHEET NO. 1 OF 31

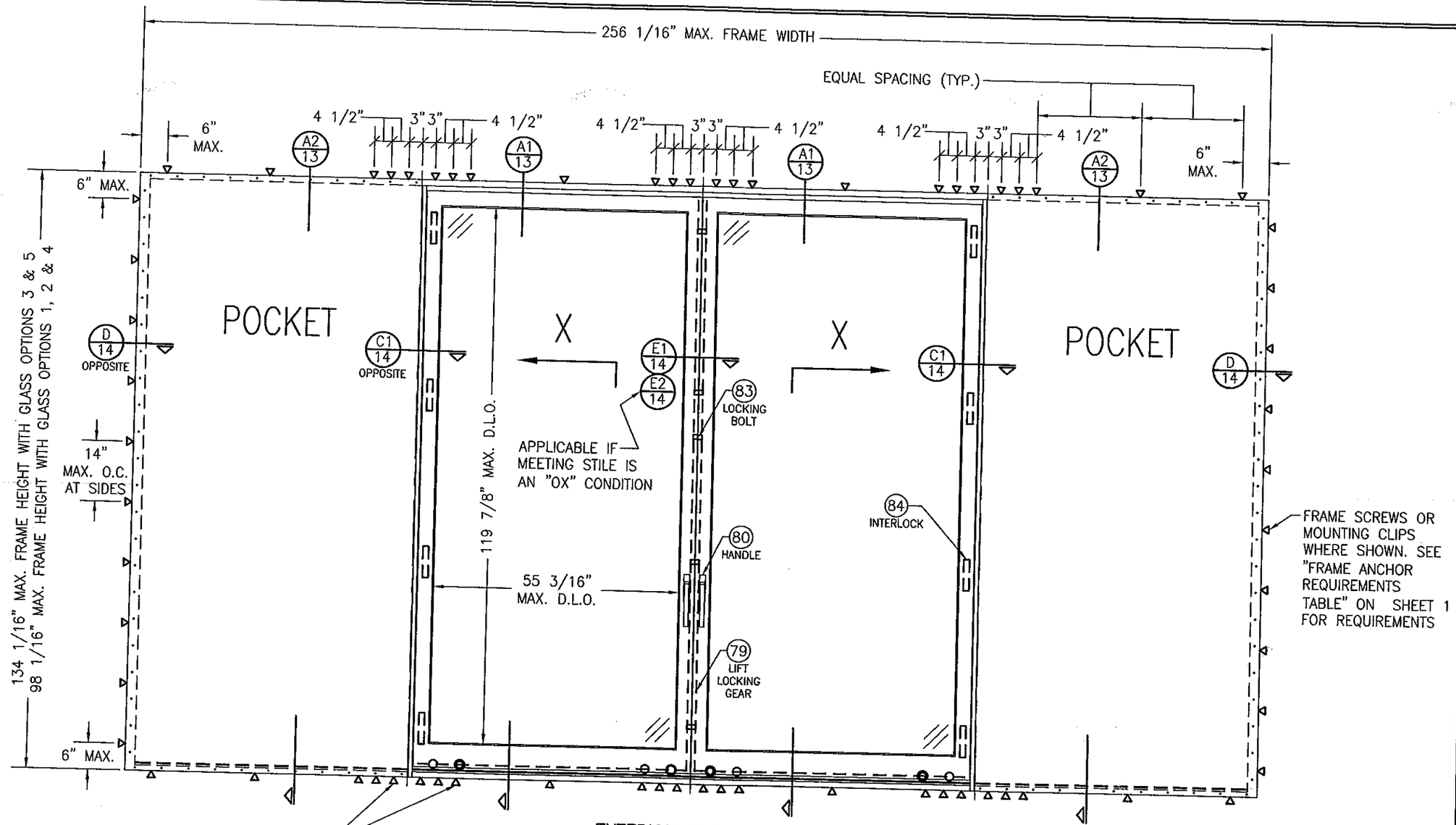

FRAME SCREWS OR MOUNTING CLIPS WHERE SHOWN AT MEETING STILE & POCKET ENDS (4 ANCHORS REQ'D WHEN FRAME HEIGHT IS 100" OR LESS OR PANEL WIDTHS ARE 36" OR LESS; 6 ANCHORS REQ'D OTHERWISE). SEE "FRAME ANCHOR REQUIREMENTS TABLE" ON SHEET 1 FOR REQUIREMENTS.

EXTERIOR ELEVATION:
1 PANEL DEEP X-X DOOR WITH POCKETS

SCALE: 1/2" = 1'-0"

FOR SIMPLIFICATION, ONLY FRAME & SASH PROJECTION LINES ARE SHOWN FOR THESE ELEVATIONS

PRODUCT REVISED
in complying with the Florida Building Code
Acceptance No. 11-1024.14
Expiration Date 11/24/15
By Ishaq I. Quraishi
Miami Dade Product Control

WARREN W. SCHAEFER LICENSE No. 44135 STATE OF FLORIDA PROFESSIONAL ENGINEER

DRAWN BY: S.T.R.	CHECKED BY: W.W.S.
PLOT: 1=24	DATE: 3/18/05

NO.	REVISION DESCRIPTION	BY	DATE

DRAWING TITLE
LIFT & SLIDE WOOD SLIDING GLASS IMPACT DOORS

MANUFACTURER
PEETZ WINDOWS & DOORS
15951 S.W. 41ST STREET; SUITE 150
WESTON, FL 33331
954-659-3887

CONSULTANTS
W. W. SCHAEFER ENGINEERING & CONSULTING, P.A. (CA 6809)
7480 150TH COURT NORTH
PALM BEACH GARDENS, FL 33418
PHONE: 561-744-3424

CERTIFICATION
OCT 19 2011
WARREN W. SCHAEFER, P.E.
P.E. NO. 44135

DRAWING NO. 1321
REV. B
SHEET NO. 2 OF 31

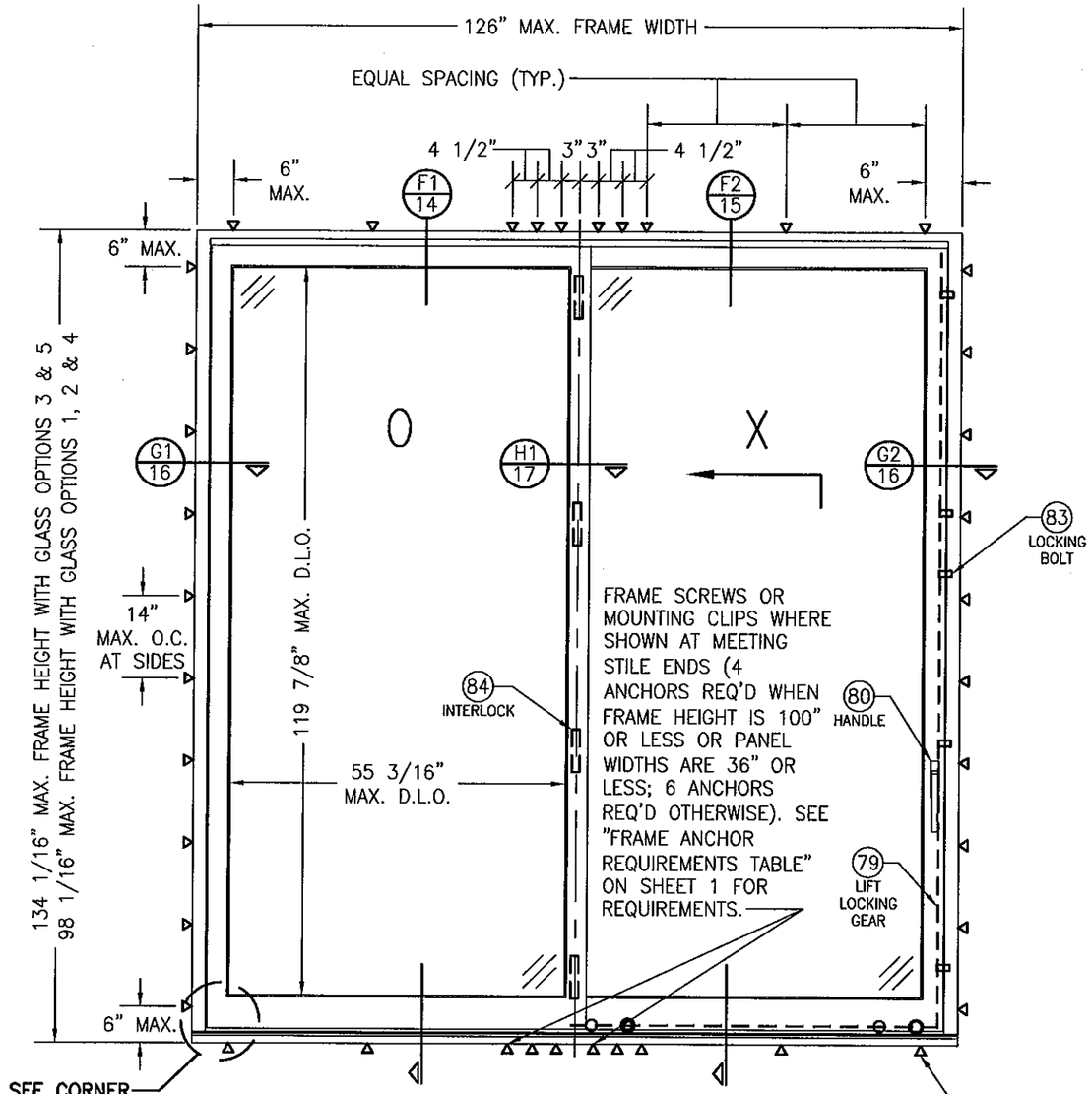

EXTERIOR ELEVATION:
2 PANEL DEEP OX DOOR WITHOUT POCKETS

SCALE: 1/2" = 1'-0"

SEE APPROVED CONFIGURATIONS ON SHEET 12 FOR ADDITIONAL 2-DEEP PANEL CONFIGURATIONS

FRAME SCREWS OR MOUNTING CLIPS WHERE SHOWN. SEE "FRAME ANCHOR REQUIREMENTS TABLE" ON SHEET 1 FOR REQUIREMENTS

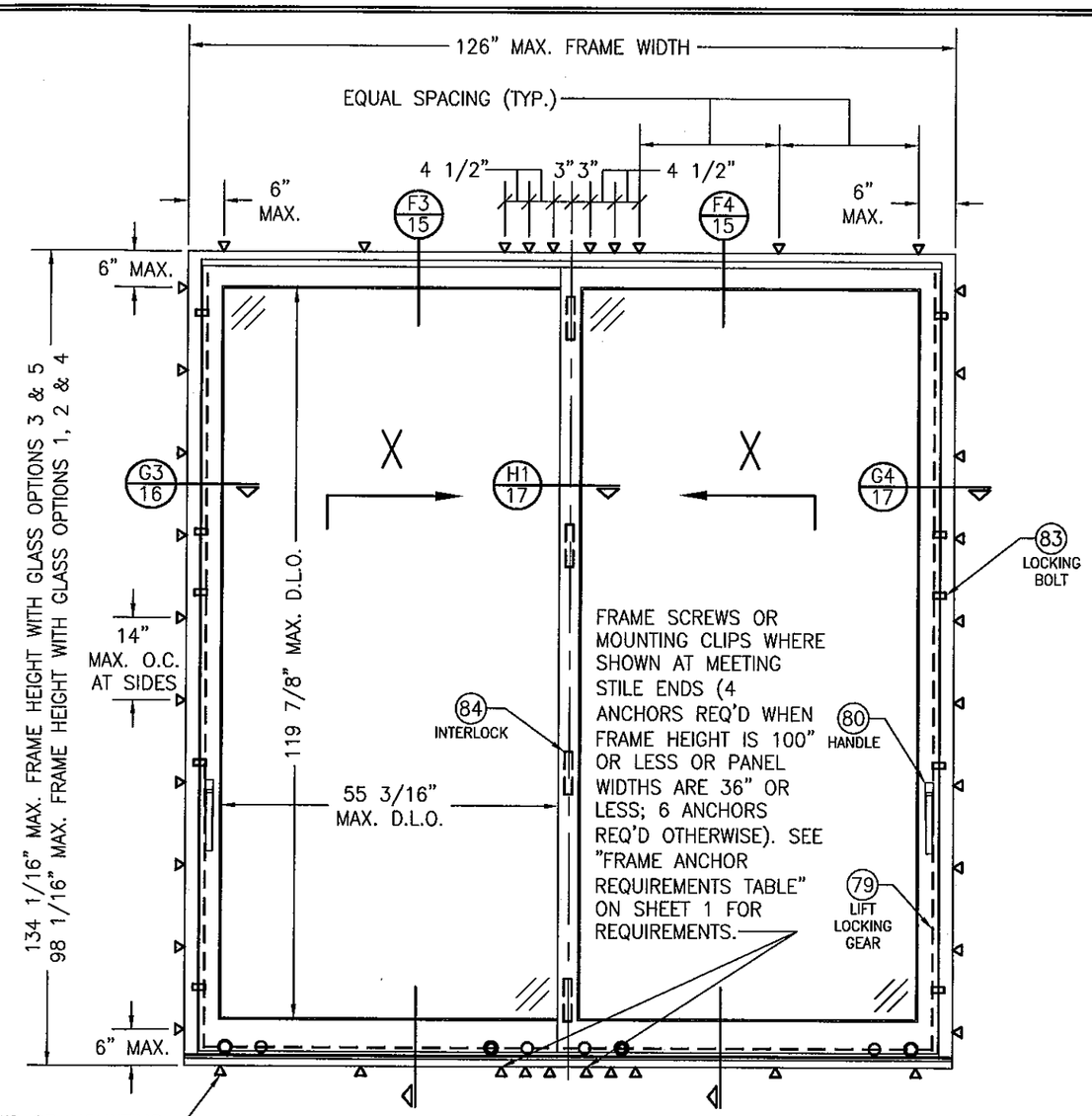

EXTERIOR ELEVATION:
2 PANEL DEEP XX DOOR WITHOUT POCKETS

SCALE: 1/2" = 1'-0"

SEE APPROVED CONFIGURATIONS ON SHEET 12 FOR ADDITIONAL 2-DEEP PANEL CONFIGURATIONS

FOR SIMPLIFICATION, ONLY FRAME & SASH PROJECTION LINES ARE SHOWN FOR THESE ELEVATIONS

PRODUCT REVISED
as complying with the Florida Building Code
Acceptance No. 11-1024.14
Expiration Date 11/24/15
By Ishag J. Chaul
Miami Dade Product Control

WARREN W. SCHAEFER ★ LICENSE No. 44135 ★ STATE OF FLORIDA ★ PROFESSIONAL ENGINEER

DRAWN BY: S.T.R.	CHECKED BY: W.W.S.
PLOT: 1=24	DATE: 3/18/05

NO.	REVISION DESCRIPTION	BY	DATE

DRAWING TITLE
LIFT & SLIDE WOOD SLIDING GLASS IMPACT DOORS

MANUFACTURER
PEETZ WINDOWS & DOORS
15951 S.W. 41ST STREET; SUITE 150
WESTON, FL 33331
954-659-3887

CONSULTANTS
W. W. SCHAEFER ENGINEERING & CONSULTING, P.A. (CA 6809)
7480 150TH COURT NORTH
PALM BEACH GARDENS, FL 33418
PHONE: 561-744-3424

CERTIFICATION
OCT 19 2011
WARREN W. SCHAEFER, P.E.
P.E. NO. 44135

DRAWING NO. 1321 | REV. B

SHEET NO. 3 OF 31

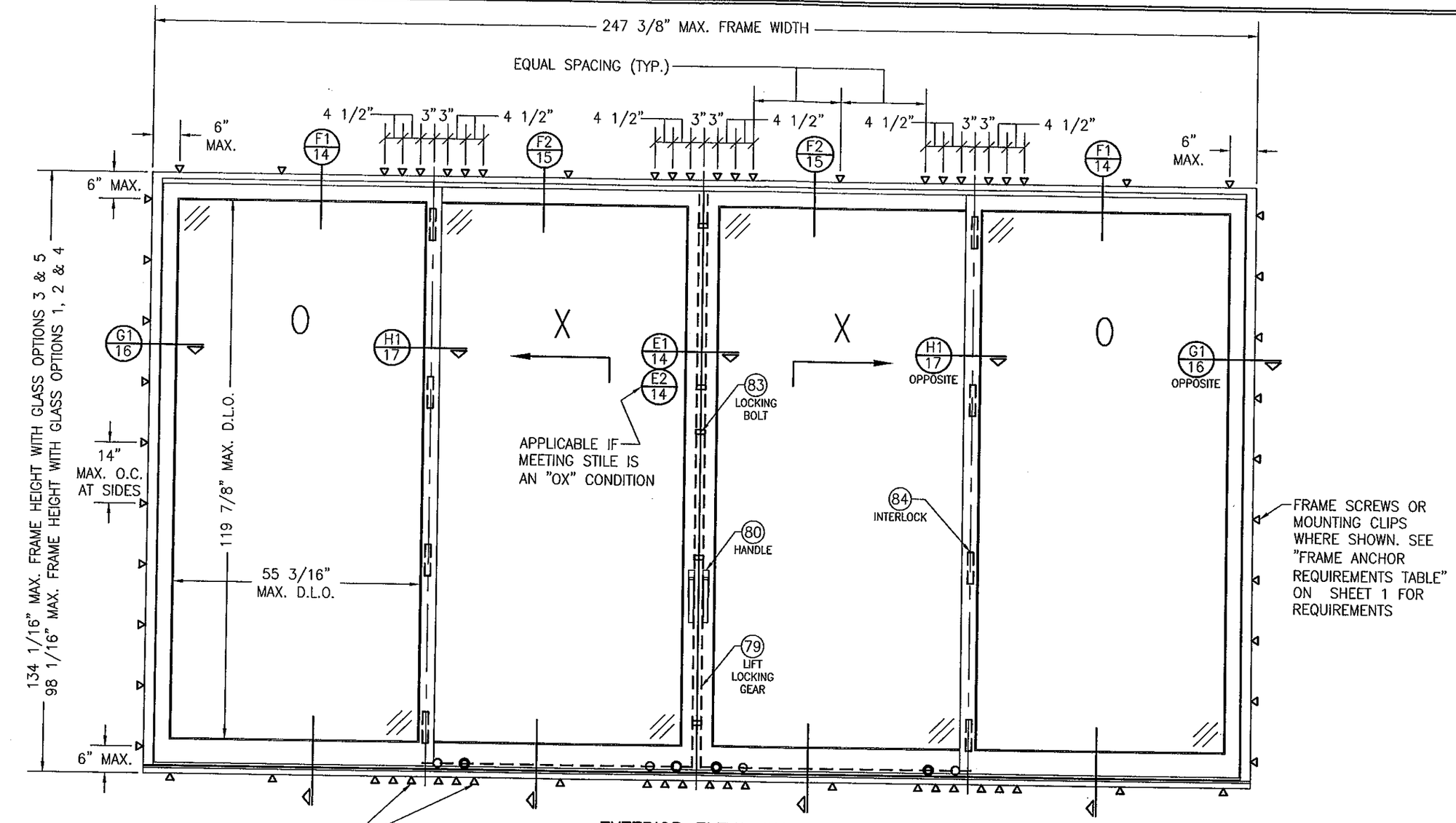

EXTERIOR ELEVATION:
2 PANEL DEEP OXXO DOOR WITHOUT POCKETS

SCALE: 1/2" = 1'-0"

SEE APPROVED CONFIGURATIONS ON SHEET 12 FOR ADDITIONAL 2-DEEP PANEL CONFIGURATIONS

FOR SIMPLIFICATION, ONLY FRAME & SASH PROJECTION LINES ARE SHOWN FOR THESE ELEVATIONS

PRODUCT REVISED
as complying with the Florida Building Code
Acceptance No. 11-1024.14
Expiration Date 11/24/15
By Ishaq I. Chang
Miami-Dade Product Control

WARREN W. SCHAEFER ★ ENGINEER ★ LICENSE No. 44135 ★ STATE OF FLORIDA ★ PROFESSIONAL ENGINEER

NO.	REVISION DESCRIPTION	BY	DATE

DRAWN BY: S.T.R. | CHECKED BY: W.W.S.
PLOT: 1=24 | DATE: 3/18/05

DRAWING TITLE
LIFT & SLIDE WOOD SLIDING GLASS IMPACT DOORS

MANUFACTURER
PEETZ WINDOWS & DOORS
15951 S.W. 41ST STREET; SUITE 150
WESTON, FL 33331
954-659-3887

CONSULTANTS
W. W. SCHAEFER ENGINEERING & CONSULTING, P.A. (CA 6809)
7480 150TH COURT NORTH
PALM BEACH GARDENS, FL 33418
PHONE: 561-744-3424

CERTIFICATION
OCT 19 2011
WARREN W. SCHAEFER, P.E.
P.E. NO. 44135

DRAWING NO. 1321 | REV. B
SHEET NO. 4 OF 31

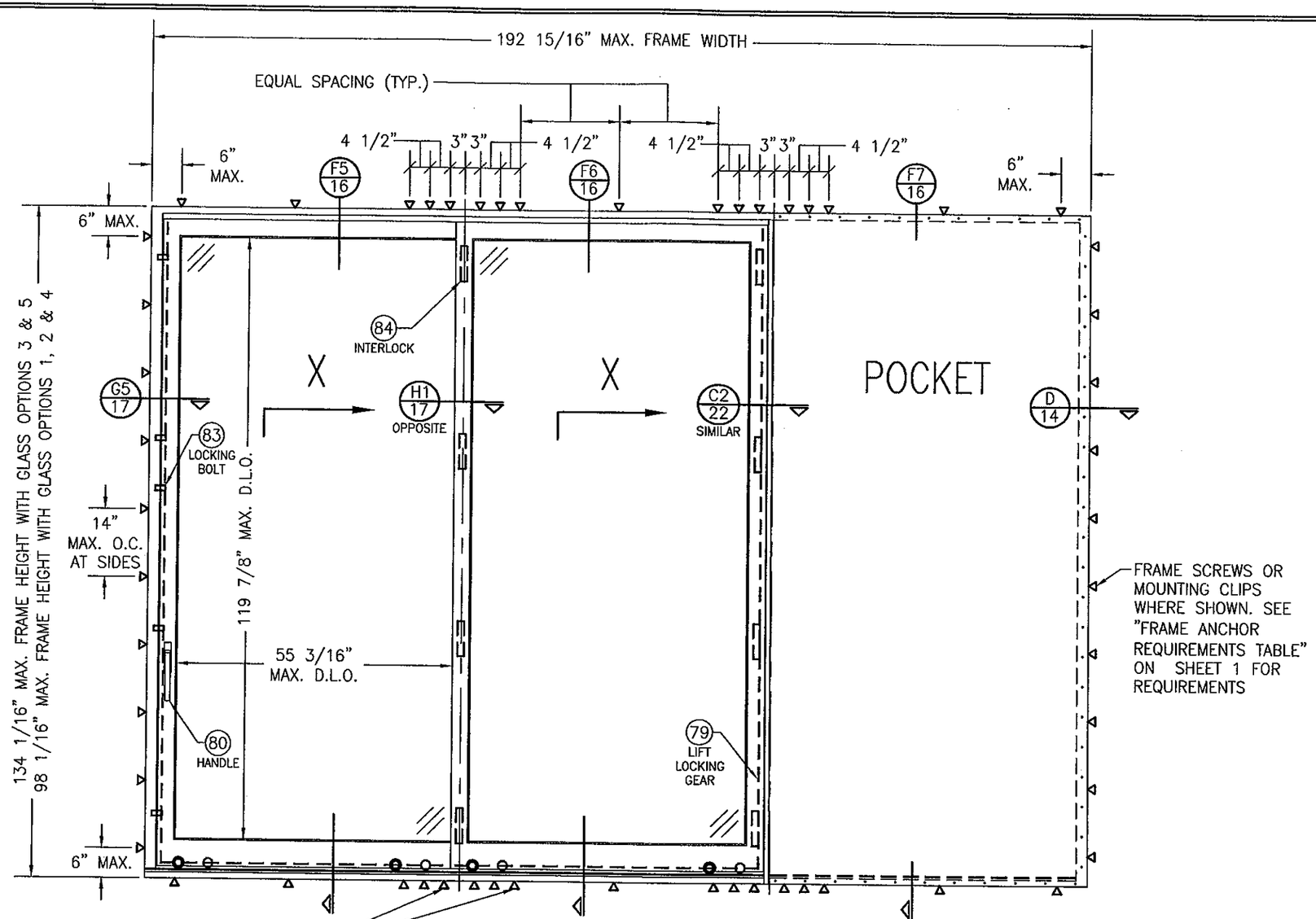

FRAME SCREWS OR MOUNTING CLIPS WHERE SHOWN AT MEETING STILE & POCKET ENDS (4 ANCHORS REQ'D WHEN FRAME HEIGHT IS 100" OR LESS OR PANEL WIDTHS ARE 36" OR LESS; 6 ANCHORS REQ'D OTHERWISE). SEE "FRAME ANCHOR REQUIREMENTS TABLE" ON SHEET 1 FOR REQUIREMENTS.

EXTERIOR ELEVATION: 2 PANEL DEEP XX DOOR WITH POCKET

SCALE: 1/2" = 1'-0"

SEE APPROVED CONFIGURATIONS ON SHEET 12 FOR ADDITIONAL 2-DEEP PANEL CONFIGURATIONS

FOR SIMPLIFICATION, ONLY FRAME & SASH PROJECTION LINES ARE SHOWN FOR THESE ELEVATIONS

PRODUCT REVISED
as complying with the Florida Building Code
Acceptance No. 11-1024.14
Expiration Date 11/24/15
By Chang I. Chang
Miami Dade Product Control

WARREN W. SCHAEFER LICENSE No. 44135 STATE OF FLORIDA PROFESSIONAL ENGINEER

DRAWN BY: S.T.R.	CHECKED BY: W.W.S.
PLOT: 1=24	DATE: 3/18/05

NO.	REVISION DESCRIPTION	BY	DATE

DRAWING TITLE
LIFT & SLIDE WOOD SLIDING GLASS IMPACT DOORS

MANUFACTURER
PEETZ WINDOWS & DOORS
15951 S.W. 41ST STREET; SUITE 150
WESTON, FL 33331
954-659-3887

CONSULTANTS
W. W. SCHAEFER ENGINEERING & CONSULTING, P.A. (CA 6809)
7480 150TH COURT NORTH
PALM BEACH GARDENS, FL 33418
PHONE: 561-744-3424

CERTIFICATION
OCT 19 2011
WARREN W. SCHAEFER, P.E.
P.E. NO. 44135

DRAWING NO. 1321 REV. B

SHEET NO. 5 OF 31

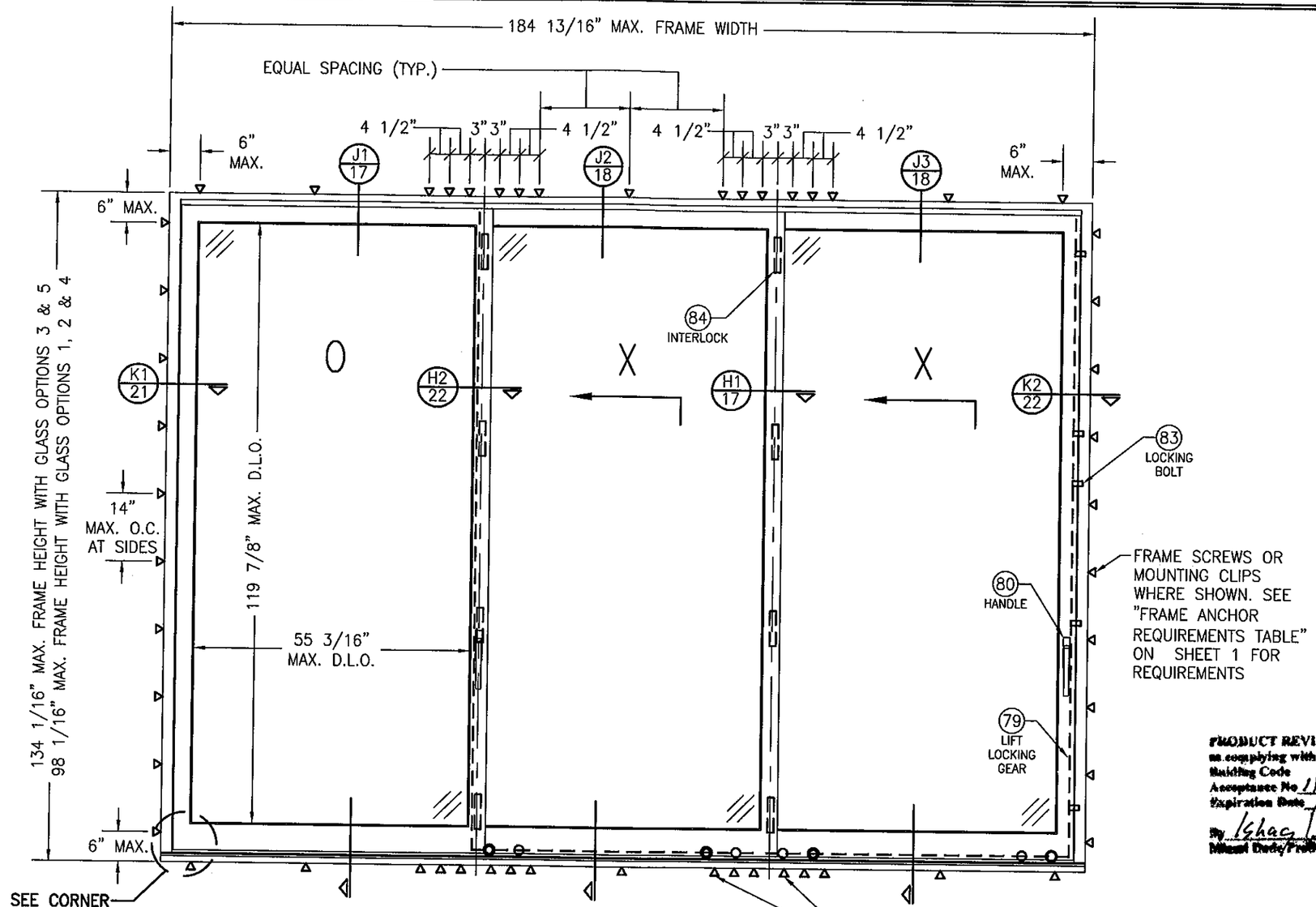

PRODUCT REVISED
as complying with the Florida Building Code
Acceptance No 11-1024.14
Expiration Date 11/30/15
By Ishaq I. Chand
Miami Dade/Product Control

EXTERIOR ELEVATION:
3 PANEL DEEP OXX DOOR WITHOUT POCKETS

SCALE: 1/2" = 1'-0"

SEE APPROVED CONFIGURATIONS ON SHEET 12 FOR ADDITIONAL 3-DEEP PANEL CONFIGURATIONS

FRAME SCREWS OR MOUNTING CLIPS WHERE SHOWN AT MEETING STILE ENDS (4 ANCHORS REQ'D WHEN FRAME HEIGHT IS 100" OR LESS OR PANEL WIDTHS ARE 36" OR LESS; 6 ANCHORS REQ'D OTHERWISE). SEE "FRAME ANCHOR REQUIREMENTS TABLE" ON SHEET 1 FOR REQUIREMENTS.

FOR SIMPLIFICATION, ONLY FRAME & SASH PROJECTION LINES ARE SHOWN FOR THESE ELEVATIONS

WARREN W. SCHAEFER ★ LICENSE No. 44135 ★ STATE OF FLORIDA ★ PROFESSIONAL ENGINEER

DRAWN BY: S.T.R.	CHECKED BY: W.W.S.
PLOT: 1=24	DATE: 3/18/05

NO.	REVISION DESCRIPTION	BY	DATE

DRAWING TITLE
LIFT & SLIDE WOOD SLIDING GLASS IMPACT DOORS

MANUFACTURER
PEETZ WINDOWS & DOORS
15951 S.W. 41ST STREET; SUITE 150
WESTON, FL 33331
954-659-3887

CONSULTANTS
W. W. SCHAEFER ENGINEERING & CONSULTING, P.A. (CA 6809)
7480 150TH COURT NORTH
PALM BEACH GARDENS, FL 33418
PHONE: 561-744-3424

CERTIFICATION
OCT 19 2011
WARREN W. SCHAEFER, P.E.
P.E. NO. 44135

DRAWING NO. 1321
REV. B
SHEET NO. 6 OF 31

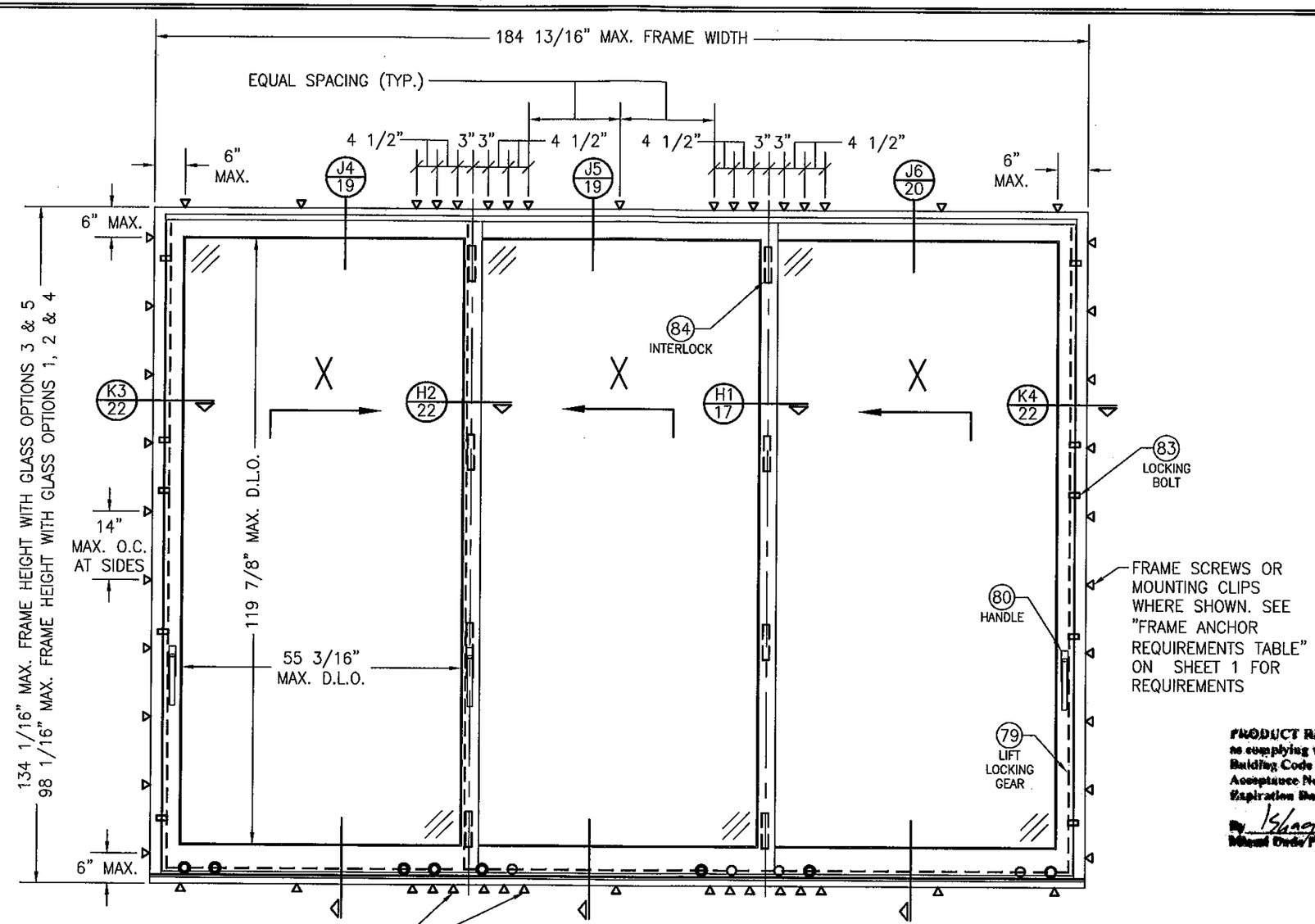

FRAME SCREWS OR MOUNTING CLIPS WHERE SHOWN AT MEETING STILE ENDS (4 ANCHORS REQ'D WHEN FRAME HEIGHT IS 100" OR LESS OR PANEL WIDTHS ARE 36" OR LESS; 6 ANCHORS REQ'D OTHERWISE). SEE "FRAME ANCHOR REQUIREMENTS TABLE" ON SHEET 1 FOR REQUIREMENTS.

EXTERIOR ELEVATION: 3 PANEL DEEP XXX DOOR WITHOUT POCKETS

SCALE: 1/2" = 1'-0"

SEE APPROVED CONFIGURATIONS ON SHEET 12 FOR ADDITIONAL 3-DEEP PANEL CONFIGURATIONS

FOR SIMPLIFICATION, ONLY FRAME & SASH PROJECTION LINES ARE SHOWN FOR THESE ELEVATIONS

PRODUCT REVISED
as complying with the Florida Building Code
Acceptance No 11-1024.14
Expiration Date 11/24/15
By Ishag T. Chanda
Miami Dade Product Control

WARREN W. SCHAEFER LICENSE No. 44135 STATE OF FLORIDA PROFESSIONAL ENGINEER

DRAWN BY: S.T.R.	CHECKED BY: W.W.S.
PLOT: 1=24	DATE: 3/18/05

NO.	REVISION DESCRIPTION	BY	DATE

DRAWING TITLE
LIFT & SLIDE WOOD SLIDING GLASS IMPACT DOORS

MANUFACTURER
PEETZ WINDOWS & DOORS
15951 S.W. 41ST STREET; SUITE 150
WESTON, FL 33331
954-659-3887

CONSULTANTS
W. W. SCHAEFER ENGINEERING & CONSULTING, P.A. (CA 6809)
7480 150TH COURT NORTH
PALM BEACH GARDENS, FL 33418
PHONE: 561-744-3424

CERTIFICATION
OCT 19 2011
WARREN W. SCHAEFER, P.E.
P.E. NO. 44135

DRAWING NO. 1321
REV. B
SHEET NO. 7 OF 31

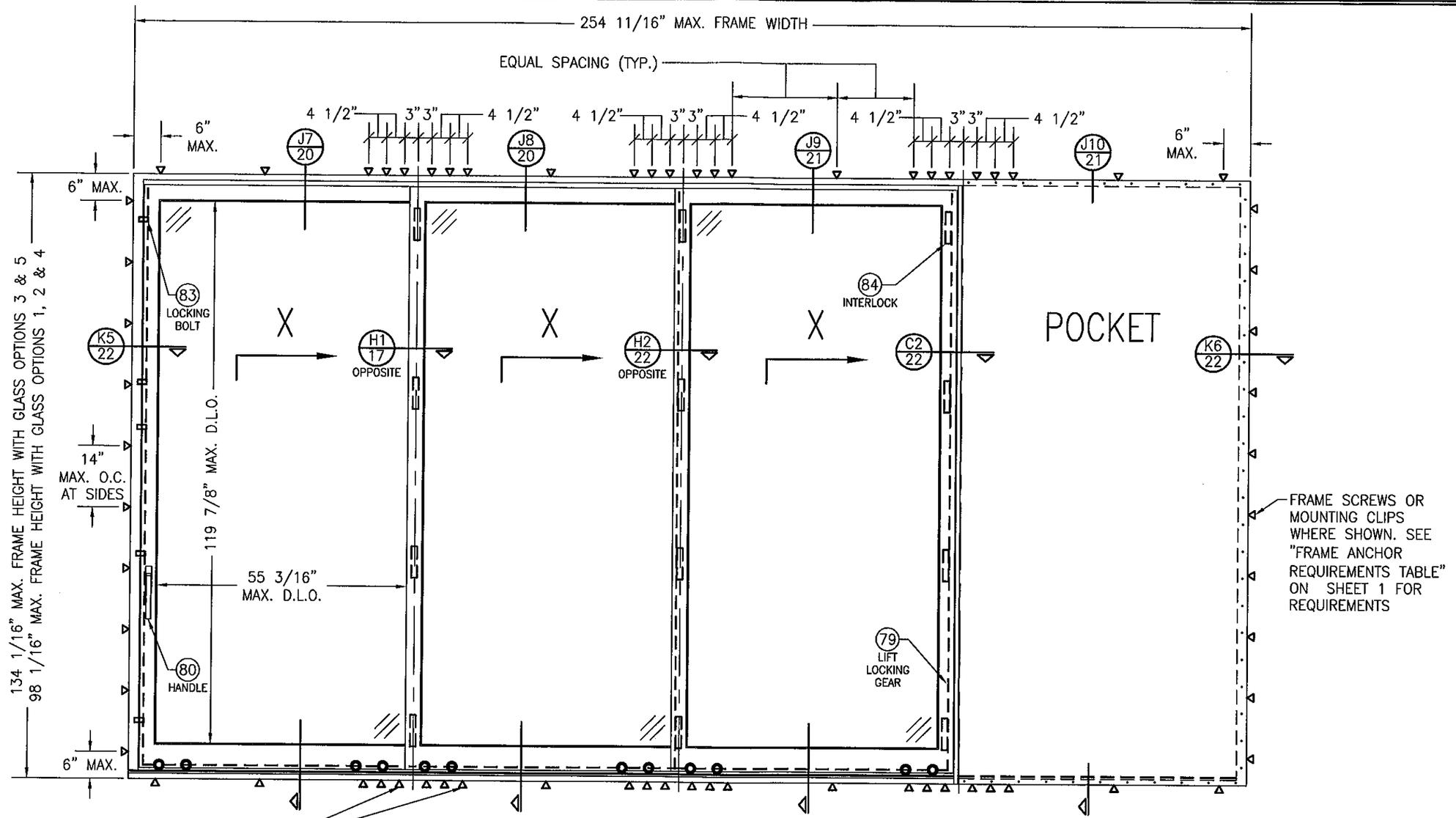

FRAME SCREWS OR MOUNTING CLIPS WHERE SHOWN AT MEETING STILE & POCKET ENDS (4 ANCHORS REQ'D WHEN FRAME HEIGHT IS 100" OR LESS OR PANEL WIDTHS ARE 36" OR LESS; 6 ANCHORS REQ'D OTHERWISE). SEE "FRAME ANCHOR REQUIREMENTS TABLE" ON SHEET 1 FOR REQUIREMENTS.

EXTERIOR ELEVATION:
3 PANEL DEEP XXX DOOR WITH POCKET

SCALE: 1/2" = 1'-0"

SEE APPROVED CONFIGURATIONS ON SHEET 12 FOR ADDITIONAL 3-DEEP PANEL CONFIGURATIONS

FOR SIMPLIFICATION, ONLY FRAME & SASH PROJECTION LINES ARE SHOWN FOR THESE ELEVATIONS

PRODUCT REVISED
as complying with the Florida Building Code
Acceptance No. 11-1024.14
Expiration Date 11/24/15
By Ishaq I. Ishaq
Miami Dade Product Control

WARREN W. SCHAEFER ★ ENGINEER ★ LICENSE No. 44135 ★ STATE OF FLORIDA ★ PROFESSIONAL ENGINEER

DRAWN BY: S.T.R.	CHECKED BY: W.W.S.
PLOT: 1=24	DATE: 3/18/05

NO.	REVISION DESCRIPTION	BY	DATE

DRAWING TITLE
LIFT & SLIDE WOOD SLIDING GLASS IMPACT DOORS

MANUFACTURER
PEETZ WINDOWS & DOORS
15951 S.W. 41ST STREET; SUITE 150
WESTON, FL 33331
954-659-3887

CONSULTANTS
W. W. SCHAEFER ENGINEERING & CONSULTING, P.A. (CA 6809)
7480 150TH COURT NORTH
PALM BEACH GARDENS, FL 33418
PHONE: 561-744-3424

CERTIFICATION
OCT 19 2011
WARREN W. SCHAEFER, P.E.
P.E. NO. 44135

DRAWING NO. 1321 REV. B

SHEET NO. 8 OF 31

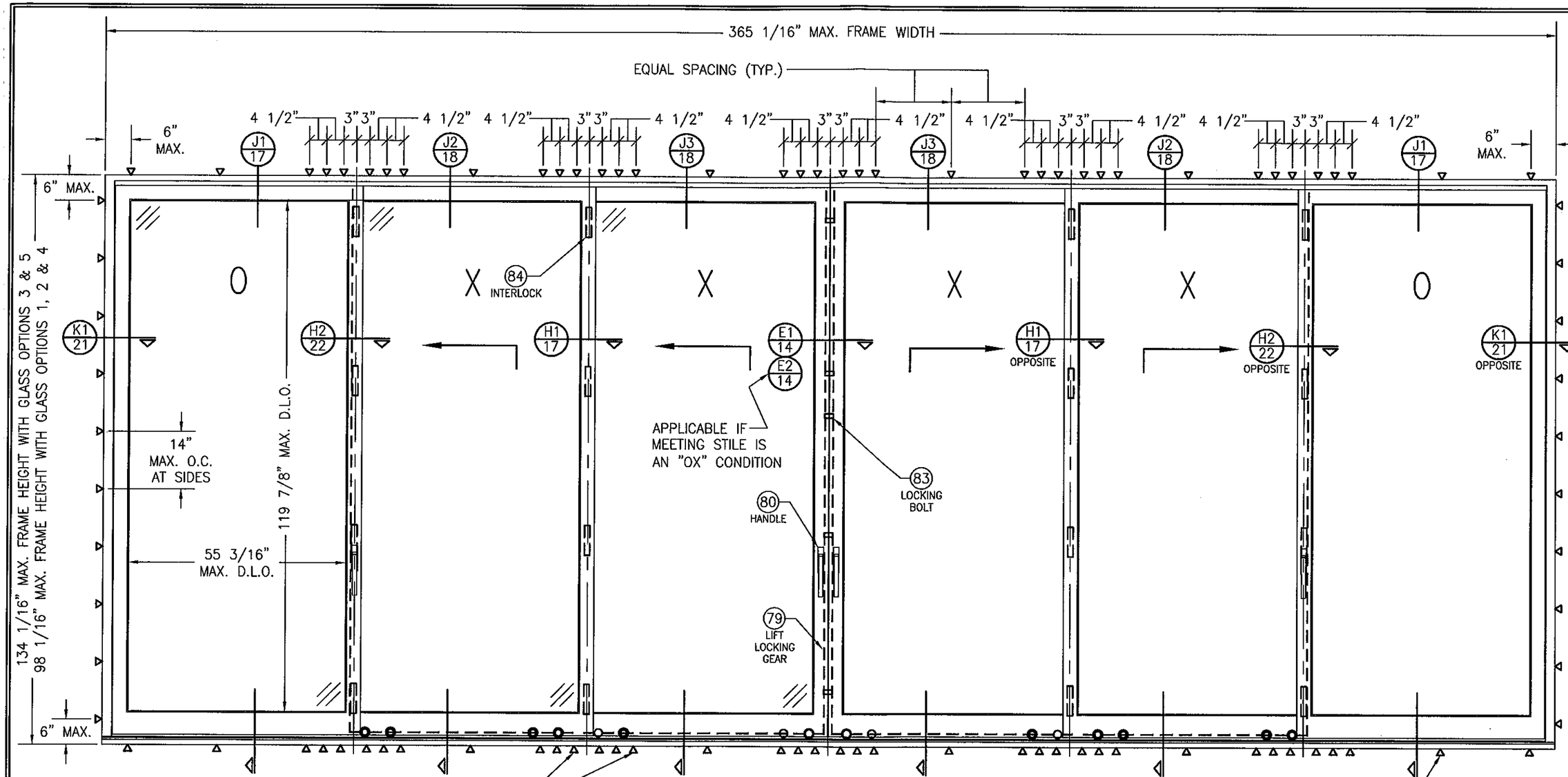

FRAME SCREWS OR MOUNTING CLIPS WHERE SHOWN AT MEETING STILE ENDS (4 ANCHORS REQ'D WHEN FRAME HEIGHT IS 100" OR LESS OR PANEL WIDTHS ARE 36" OR LESS; 6 ANCHORS REQ'D OTHERWISE). SEE "FRAME ANCHOR REQUIREMENTS TABLE" ON SHEET 1 FOR REQUIREMENTS.

FRAME SCREWS OR MOUNTING CLIPS WHERE SHOWN. SEE "FRAME ANCHOR REQUIREMENTS TABLE" ON SHEET 1 FOR REQUIREMENTS

EXTERIOR ELEVATION:
3 PANEL DEEP OXXXXO DOOR WITHOUT POCKETS

SCALE: N.T.S.

SEE APPROVED CONFIGURATIONS ON SHEET 12 FOR ADDITIONAL 3-DEEP PANEL CONFIGURATIONS

FOR SIMPLIFICATION, ONLY FRAME & SASH PROJECTION LINES ARE SHOWN FOR THESE ELEVATIONS

PRODUCT REVISED
as complying with the Florida Building Code
Acceptance No. 11-1024.15
Expiration Date 11/24/15
By Ichng T. Chaurd
Miami Dade Product Control

WARREN W. SCHAEFER ★ ENGINEER ★ LICENSE No. 44135 ★ STATE OF FLORIDA ★ PROFESSIONAL ENGINEER

NO.	REVISION DESCRIPTION	BY	DATE

DRAWN BY: S.T.R.
CHECKED BY: W.W.S.
PLOT: 1=24
DATE: 3/18/05

DRAWING TITLE
LIFT & SLIDE WOOD SLIDING GLASS IMPACT DOORS

MANUFACTURER
PEETZ WINDOWS & DOORS
15951 S.W. 41ST STREET; SUITE 150
WESTON, FL 33331
954-659-3887

CONSULTANTS
W. W. SCHAEFER ENGINEERING & CONSULTING, P.A. (CA 6809)
7480 150TH COURT NORTH
PALM BEACH GARDENS, FL 33418
PHONE: 561-744-3424

CERTIFICATION
OCT 19 2011
WARREN W. SCHAEFER, P.E.
P.E. NO. 44135

DRAWING NO. 1321
REV. B
SHEET NO. 9 OF 31

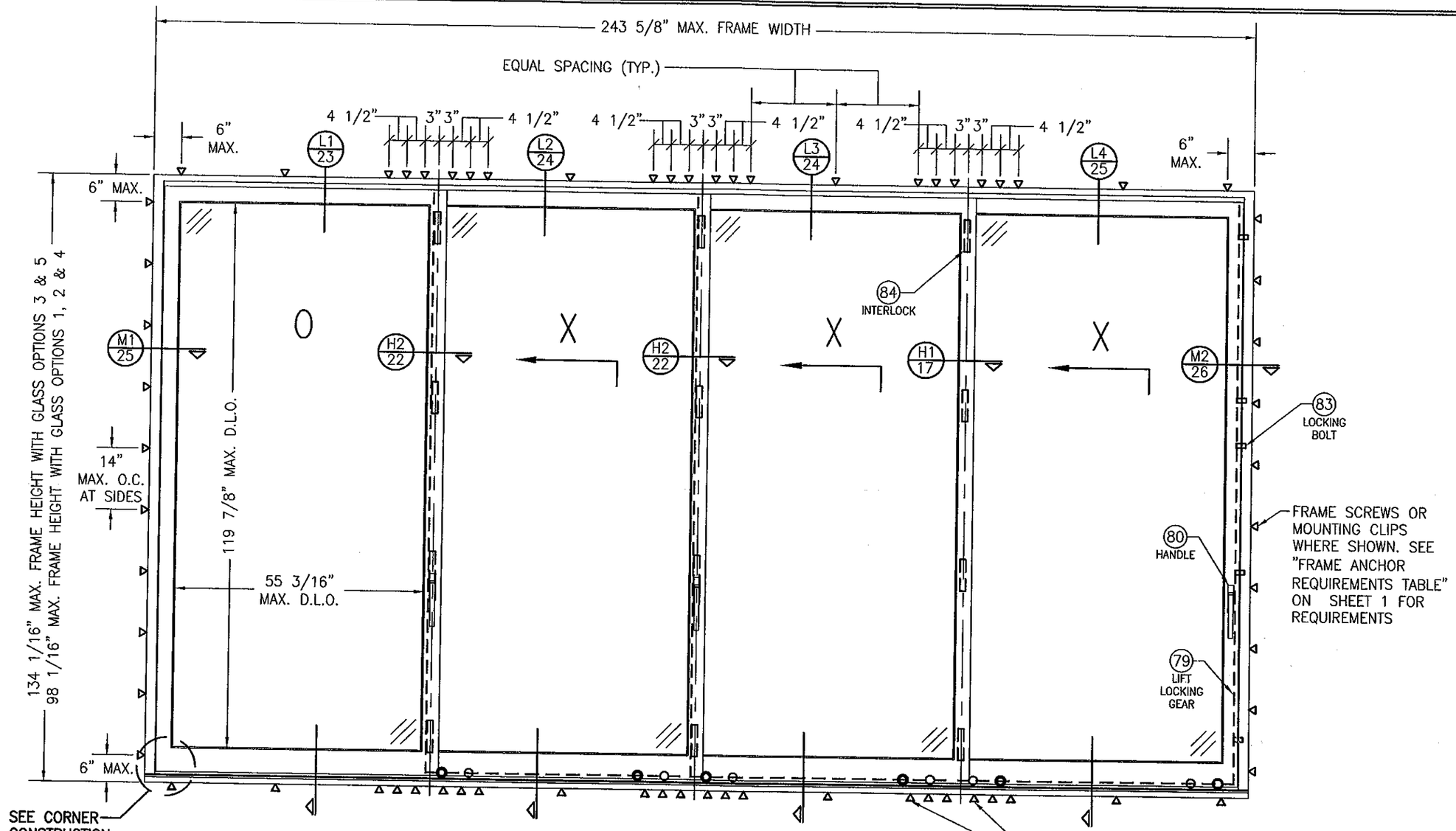

EXTERIOR ELEVATION: 4 PANEL DEEP OXXX DOOR

SCALE: 1/2" = 1'-0"

SEE APPROVED CONFIGURATIONS ON SHEET 12 FOR ADDITIONAL 4-DEEP PANEL CONFIGURATIONS

FOR SIMPLIFICATION, ONLY FRAME & SASH PROJECTION LINES ARE SHOWN FOR THESE ELEVATIONS

PRODUCT REVISED
as complying with the Florida Building Code
Acceptance No 11-1024.14
Expiration Date 11/24/15
By [signature]
Miami Dade Product Control

WARREN W. SCHAEFER LICENSE No. 44135 STATE OF FLORIDA PROFESSIONAL ENGINEER

DRAWN BY: S.T.R.	CHECKED BY: W.W.S.
PLOT: 1=24	DATE: 3/18/05

NO.	REVISION DESCRIPTION	BY	DATE

DRAWING TITLE
LIFT & SLIDE WOOD SLIDING GLASS IMPACT DOORS

MANUFACTURER
PEETZ WINDOWS & DOORS
15951 S.W. 41ST STREET; SUITE 150
WESTON, FL 33331
954-659-3887

CONSULTANTS
W. W. SCHAEFER ENGINEERING & CONSULTING, P.A. (CA 6809)
7480 150TH COURT NORTH
PALM BEACH GARDENS, FL 33418
PHONE: 561-744-3424

CERTIFICATION
OCT 19 2011
WARREN W. SCHAEFER, P.E.
P.E. NO. 44135

DRAWING NO. 1321 REV. B

SHEET NO. 10 OF 31

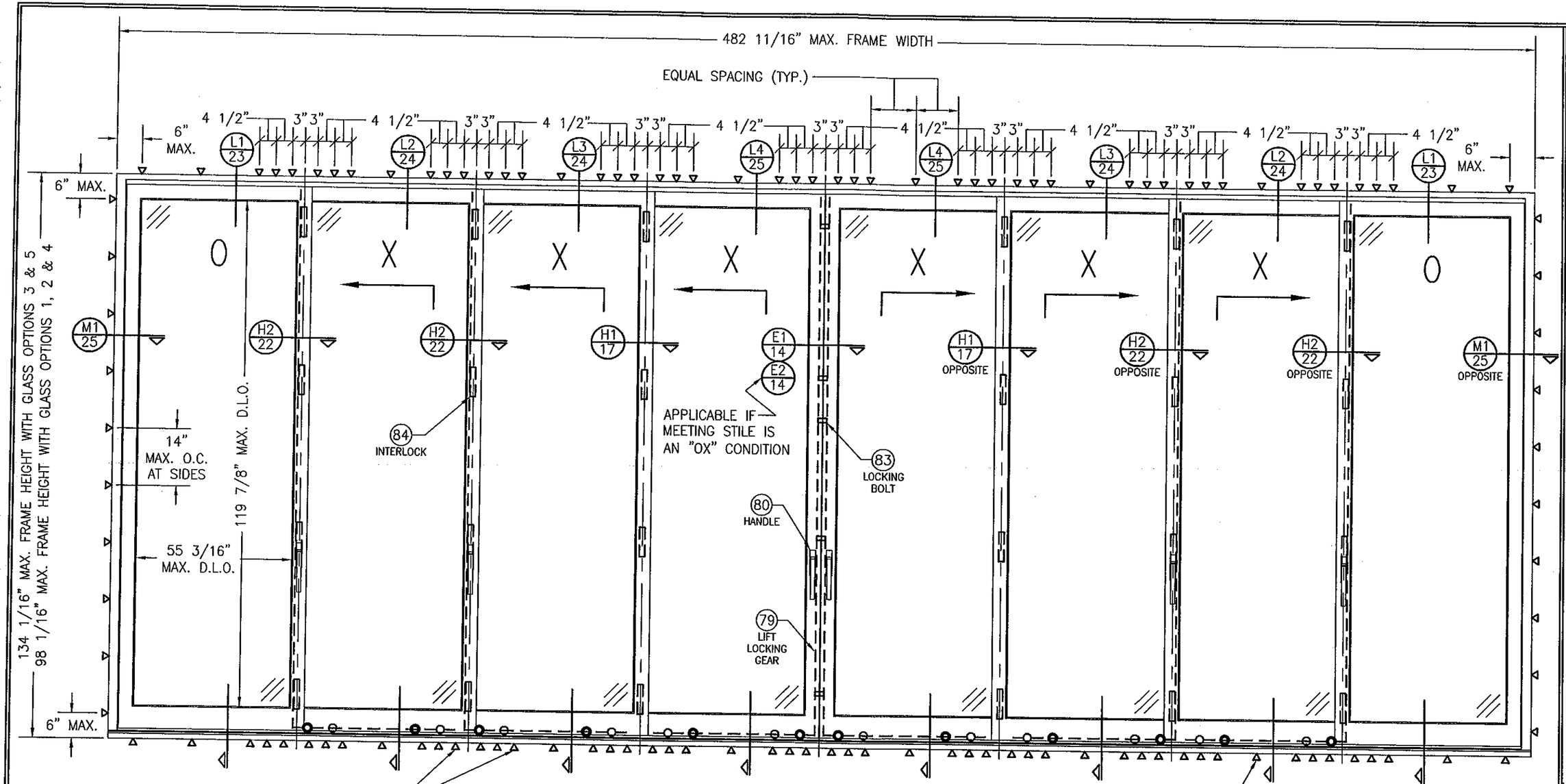

FRAME SCREWS OR MOUNTING CLIPS WHERE SHOWN AT MEETING STILE ENDS (4 ANCHORS REQ'D WHEN FRAME HEIGHT IS 100" OR LESS OR PANEL WIDTHS ARE 36" OR LESS; 6 ANCHORS REQ'D OTHERWISE). SEE "FRAME ANCHOR REQUIREMENTS TABLE" ON SHEET 1 FOR REQUIREMENTS .

FRAME SCREWS OR MOUNTING CLIPS WHERE SHOWN. SEE "FRAME ANCHOR REQUIREMENTS TABLE" ON SHEET 1 FOR REQUIREMENTS

EXTERIOR ELEVATION: 4 PANEL DEEP OXXXXXXO DOOR

SCALE: N.T.S.

SEE APPROVED CONFIGURATIONS ON SHEET 12 FOR ADDITIONAL 4-DEEP PANEL CONFIGURATIONS

FOR SIMPLIFICATION, ONLY FRAME & SASH PROJECTION LINES ARE SHOWN FOR THESE ELEVATIONS

PRODUCT REVISED
in complying with the Florida Building Code
Acceptance No. 11-1024.14
Expiration Date 11/24/15
By Shan L. Chaudhe
Miami Dade Product Control

WARREN W. SCHAEFER ★ LICENSE No. 44135 ★ STATE OF FLORIDA ★ PROFESSIONAL ENGINEER

DRAWN BY: S.T.R.	CHECKED BY: W.W.S.
PLOT: 1=24	DATE: 3/18/05

NO.	REVISION DESCRIPTION	BY	DATE

DRAWING TITLE
LIFT & SLIDE WOOD SLIDING GLASS IMPACT DOORS

MANUFACTURER
PEETZ WINDOWS & DOORS
15951 S.W. 41ST STREET; SUITE 150
WESTON, FL 33331
954-659-3887

CONSULTANTS
W. W. SCHAEFER ENGINEERING & CONSULTING, P.A. (CA 6809)
7480 150TH COURT NORTH
PALM BEACH GARDENS, FL 33418
PHONE: 561-744-3424

CERTIFICATION
OCT 19 2011
WARREN W. SCHAEFER, P.E.
P.E. NO. 44135

DRAWING NO. 1321 REV. B

SHEET NO. 11 OF 31

APPROVED CONFIGURATIONS

CONFIGURATIONS WITHOUT POCKETS

2-PANEL DEEP CONDITIONS

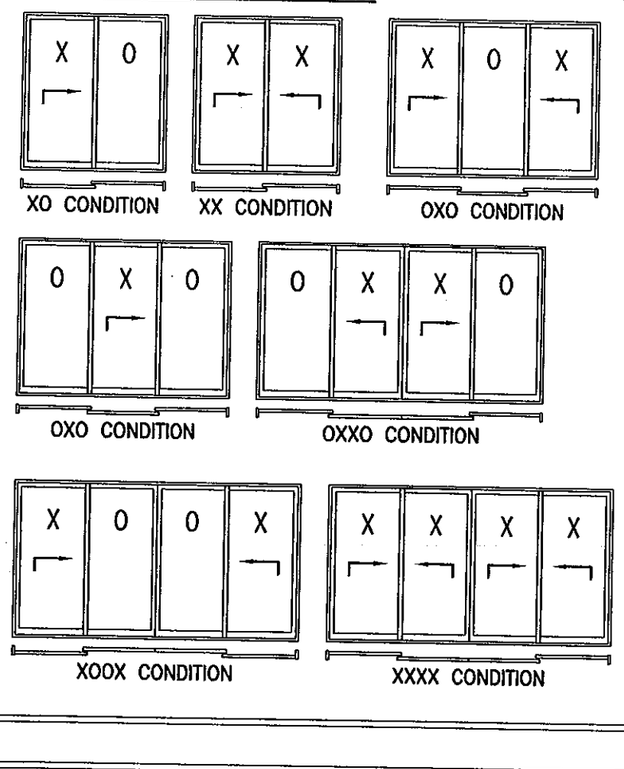

3-PANEL DEEP CONDITIONS

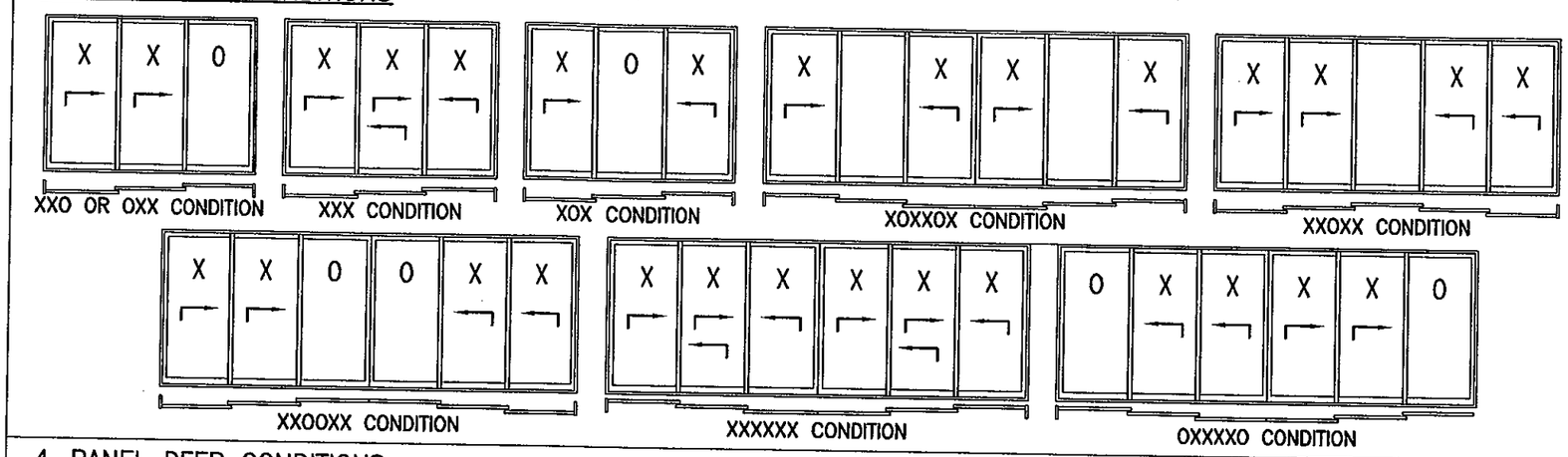

4-PANEL DEEP CONDITIONS

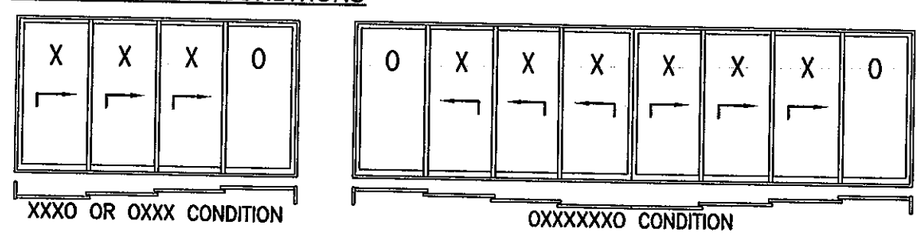

CONFIGURATIONS WITH POCKETS

1-PANEL DEEP CONDITIONS

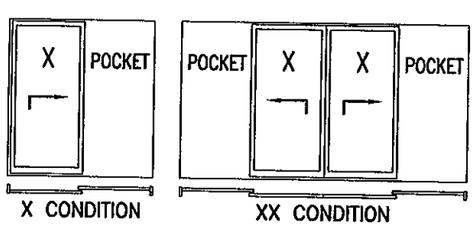

3-PANEL DEEP CONDITIONS

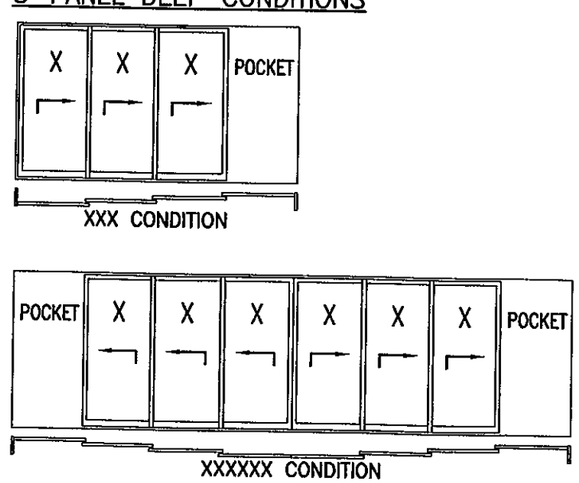

2-PANEL DEEP CONDITIONS

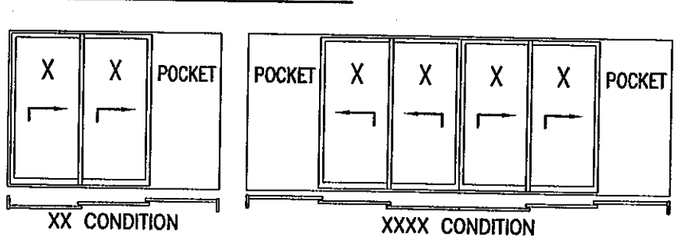

CONDITIONS SHOWN ARE THE MAJORITY OF THOSE USED. OTHER CONDITIONS OF "O" & "X" PANELS APPLY PROVIDING THEY ARE WITHIN THE SCOPE OF THE DETAILS WITHIN THIS DRAWING

PRODUCT REVISED
as complying with the Florida
Building Code
Acceptance No. 11-1024.14
Expiration Date 11/24/15
By Craig T. Lauda
Miami Dade Product Control

WARREN W. SCHAEFER LICENSE No. 44135 STATE OF FLORIDA PROFESSIONAL ENGINEER

NO.	REVISION DESCRIPTION	BY	DATE

DRAWN BY: S.T.R.
CHECKED BY: W.W.S.
PLOT: 1=24
DATE: 3/18/05

DRAWING TITLE
LIFT & SLIDE WOOD SLIDING GLASS IMPACT DOORS

MANUFACTURER
PEETZ WINDOWS & DOORS
15951 S.W. 41ST STREET, SUITE 150
WESTON, FL 33331
954-659-3887

CONSULTANTS
W. W. SCHAEFER ENGINEERING & CONSULTING, P.A. (CA 6809)
7480 150TH COURT NORTH
PALM BEACH GARDENS, FL 33418
PHONE: 561-744-3424

CERTIFICATION
OCT 19 2011
WARREN W. SCHAEFER, P.E.
P.E. NO. 44135

DRAWING NO. 1321
REV. B
SHEET NO. 12 OF 31

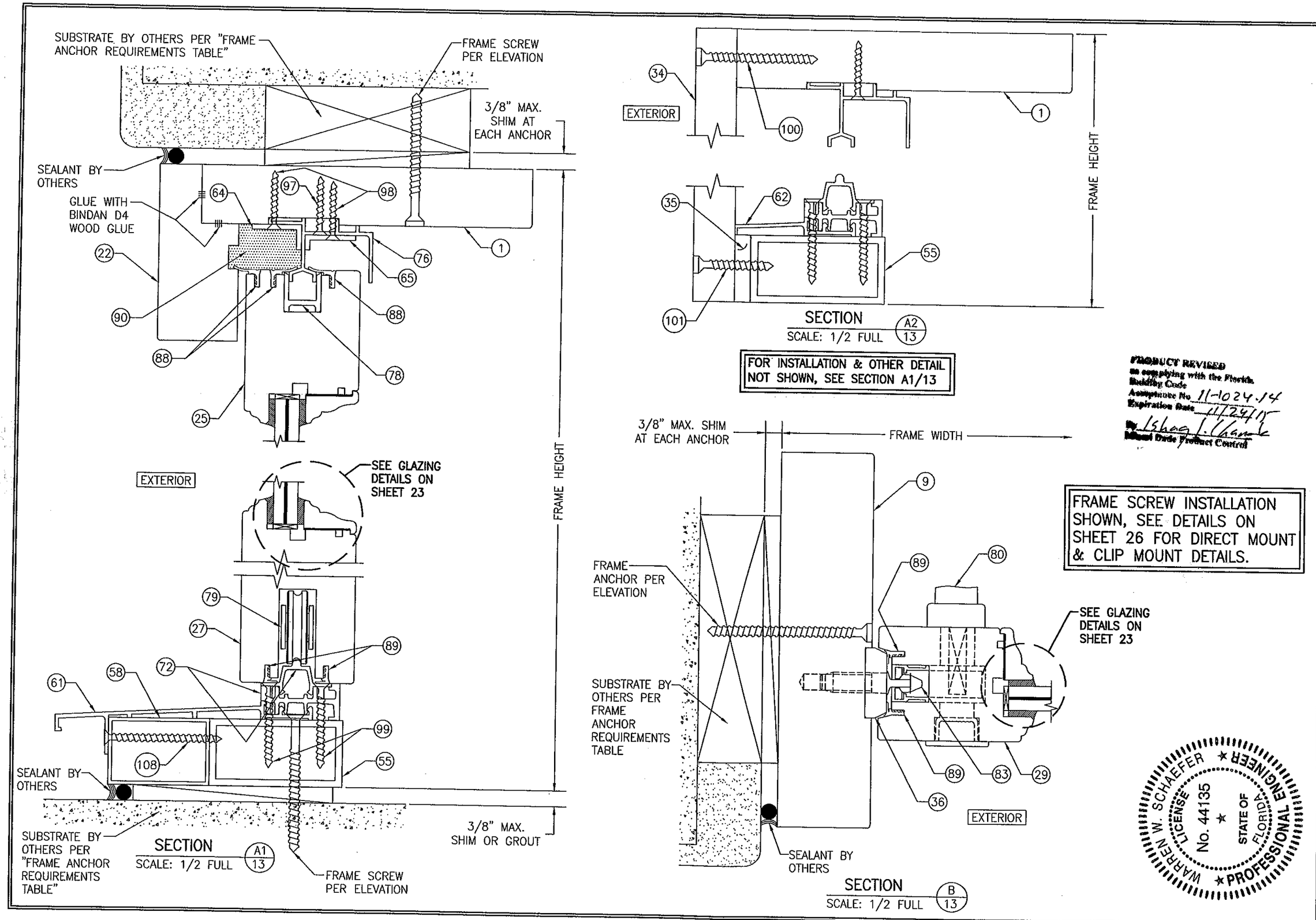

FRAME SCREW INSTALLATION SHOWN, SEE DETAILS ON SHEET 26 FOR DIRECT MOUNT & CLIP MOUNT DETAILS.

PRODUCT REVISED
as complying with the Florida Building Code
Acceptance No. 11-1024.14
Expiration Date 11/24/15
By Ishag J. Chanak
Miami Dade Product Control

WARREN W. SCHAEFER ★ LICENSE No. 44135 ★ STATE OF FLORIDA ★ PROFESSIONAL ENGINEER

DRAWN BY: S.T.R.	CHECKED BY: W.W.S.
PLOT: 1=2	DATE: 3/18/05

NO.	REVISION DESCRIPTION	BY	DATE

DRAWING TITLE: LIFT & SLIDE WOOD SLIDING GLASS IMPACT DOORS

MANUFACTURER: PEETZ WINDOWS & DOORS, 15951 S.W. 41ST STREET; SUITE 150, WESTON, FL 33331, 954-659-3887

CONSULTANTS: W. W. SCHAEFER ENGINEERING & CONSULTING, P.A. (CA 6809), 7480 150TH COURT NORTH, PALM BEACH GARDENS, FL 33418, PHONE: 561-744-3424

CERTIFICATION: OCT 19 2011 WARREN W. SCHAEFER, P.E. P.E. NO. 44135

DRAWING NO. 1321 REV. B

SHEET NO. 13 OF 31

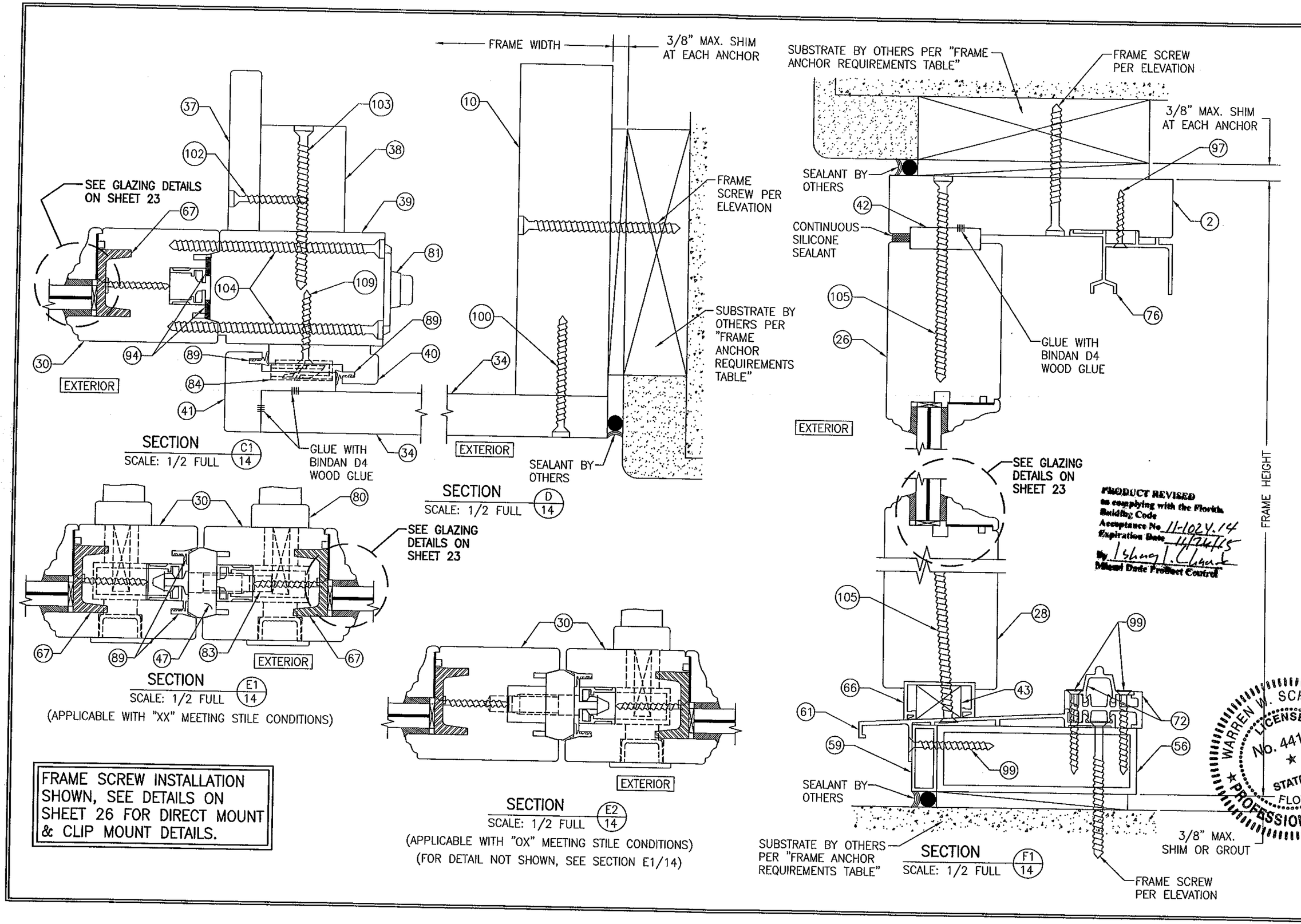

FRAME SCREW INSTALLATION SHOWN, SEE DETAILS ON SHEET 26 FOR DIRECT MOUNT & CLIP MOUNT DETAILS.

PRODUCT REVISED
as complying with the Florida Building Code
Acceptance No. 11-1024.14
Expiration Date 11/24/15
By Ishaq I. Chaudhary
Miami Dade Product Control

DRAWN BY: S.T.R.	CHECKED BY: W.W.S.
PLOT: 1=2	DATE: 3/18/05

NO.	REVISION DESCRIPTION	BY	DATE

DRAWING TITLE: LIFT & SLIDE WOOD SLIDING GLASS IMPACT DOORS

MANUFACTURER: PEETZ WINDOWS & DOORS
15951 S.W. 41ST STREET; SUITE 150
WESTON, FL 33331
954-659-3887

CONSULTANTS: W. W. SCHAEFER ENGINEERING & CONSULTING, P.A. (CA 6809)
7480 150TH COURT NORTH
PALM BEACH GARDENS, FL 33418
PHONE: 561-744-3424

CERTIFICATION: WARREN W. SCHAEFER, P.E. NO. 44135
OCT 19 2011

WARREN W. SCHAEFER LICENSE No. 44135 STATE OF FLORIDA PROFESSIONAL ENGINEER

DRAWING NO. 1321 | REV. B

SHEET NO. 14 OF 31

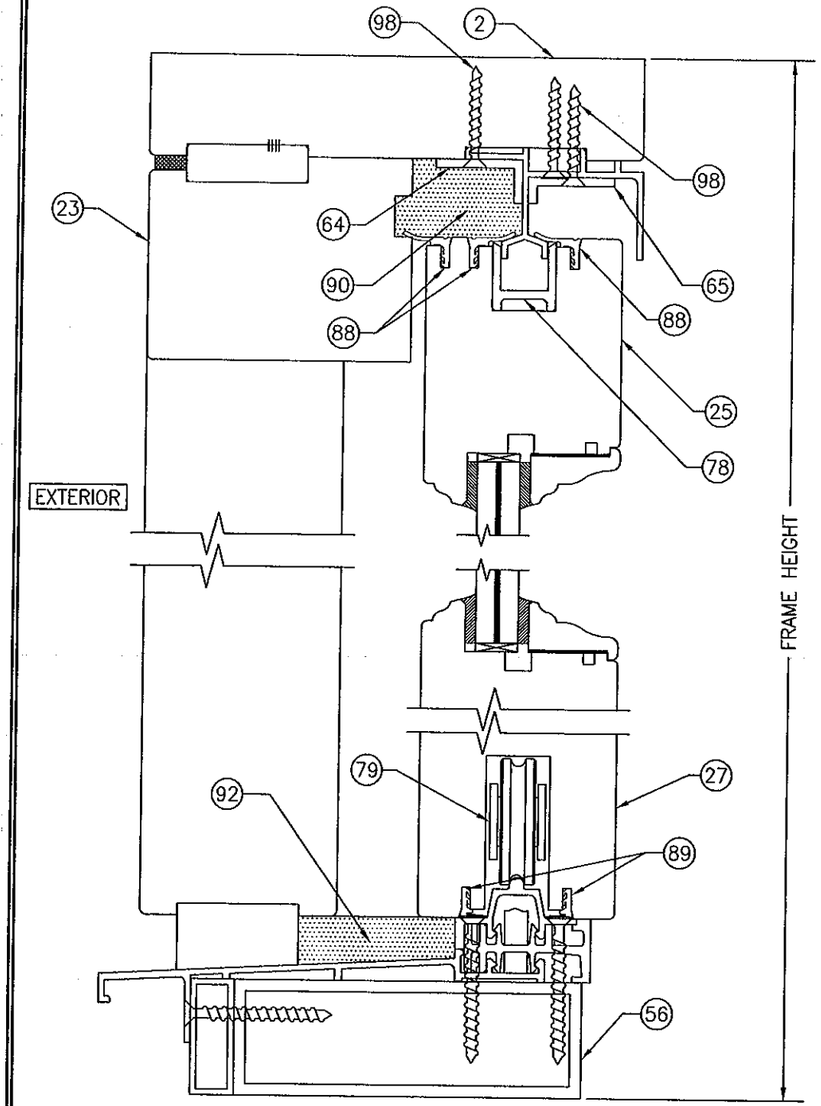

SECTION F2/15
SCALE: 1/2 FULL

FOR INSTALLATION & OTHER DETAIL NOT SHOWN, SEE SECTION F1/14

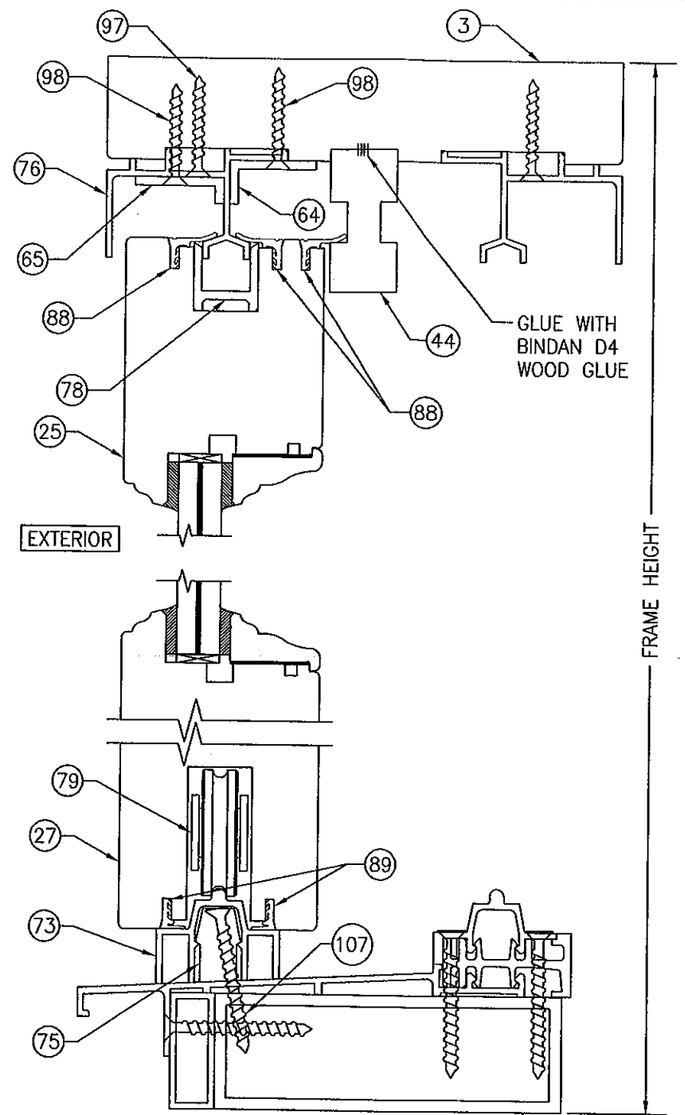

SECTION F3/15
SCALE: 1/2 FULL

FOR INSTALLATION & OTHER DETAIL NOT SHOWN, SEE SECTION F1/14

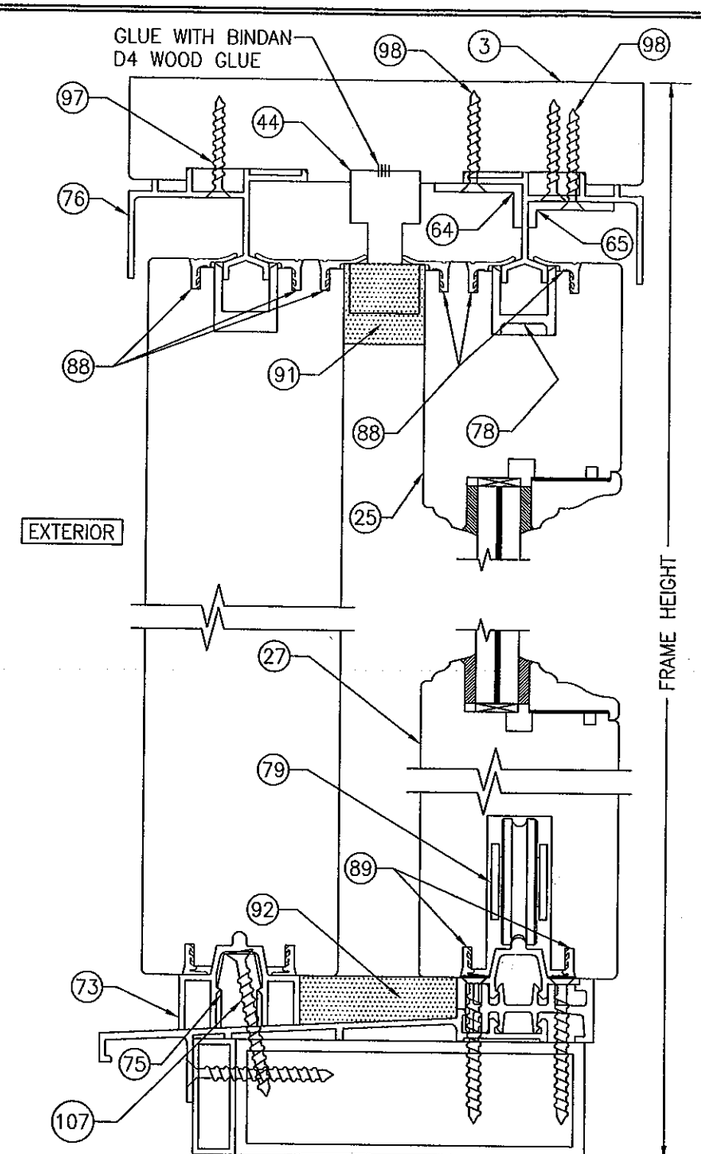

SECTION F4/15
SCALE: 1/2 FULL

FOR INSTALLATION & OTHER DETAIL NOT SHOWN, SEE SECTION F1/14

FRAME SCREW INSTALLATION SHOWN, SEE DETAILS ON SHEET 26 FOR DIRECT MOUNT & CLIP MOUNT DETAILS.

PRODUCT REVISED
as complying with the Florida Building Code
Acceptance No. 11-1024.14
Expiration Date 11/24/15
By Craig T. Chandler
Miami Dade Product Control

WARREN W. SCHAEFER ★ LICENSE No. 44135 ★ STATE OF FLORIDA ★ PROFESSIONAL ENGINEER

NO.	REVISION DESCRIPTION	BY	DATE

DRAWN BY: S.T.R.
CHECKED BY: W.W.S.
PLOT: 1=2
DATE: 3/18/05

DRAWING TITLE: LIFT & SLIDE WOOD SLIDING GLASS IMPACT DOORS

MANUFACTURER: PEETZ WINDOWS & DOORS
15951 S.W. 41ST STREET; SUITE 150
WESTON, FL 33331
954-659-3887

CONSULTANTS: W. W. SCHAEFER ENGINEERING & CONSULTING, P.A. (CA 6809)
7480 150TH COURT NORTH
PALM BEACH GARDENS, FL 33418
PHONE: 561-744-3424

CERTIFICATION: OCT 19 2011
WARREN W. SCHAEFER, P.E.
P.E. NO. 44135

DRAWING NO. 1321
REV. B
SHEET NO. 15 OF 31

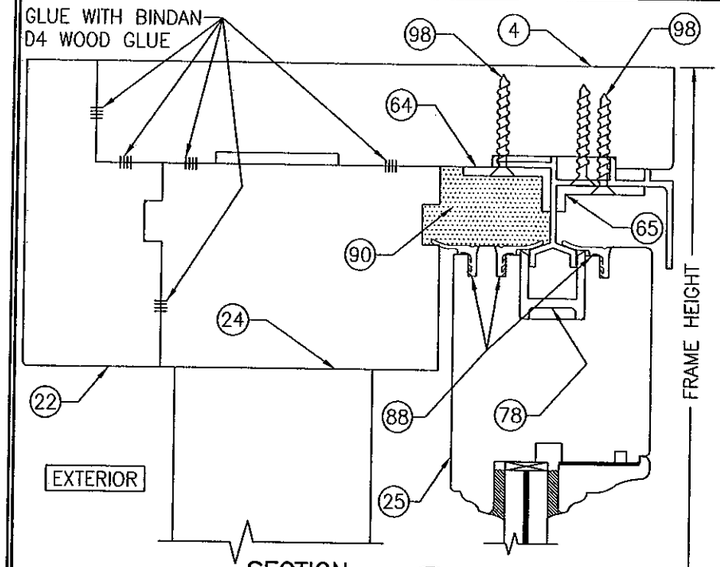

SECTION F5/16
SCALE: 1/2 FULL
(FOR SILL NOT SHOWN, SEE SECTION F4/15)

FOR INSTALLATION & OTHER DETAIL NOT SHOWN, SEE SECTION F1/14

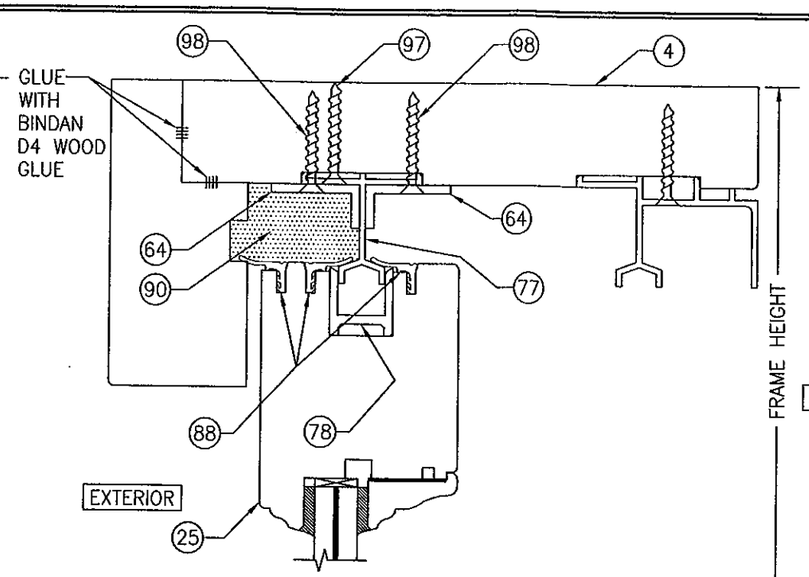

SECTION F6/16
SCALE: 1/2 FULL
(FOR SILL DETAIL NOT SHOWN, SEE SECTION F3/15)

FOR INSTALLATION & OTHER DETAIL NOT SHOWN, SEE SECTION F1/14

PRODUCT REVISED
as complying with the Florida Building Code
Acceptance No. 11-1024.14
Expiration Date: 11/24/15
By: Ishaq I. Chang
Miami-Dade Product Control

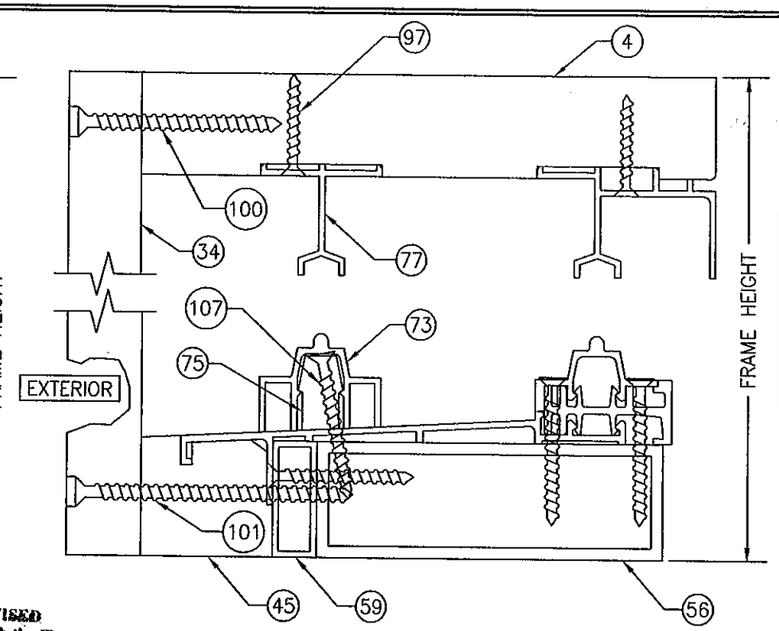

SECTION F7/16
SCALE: 1/2 FULL

FOR INSTALLATION & OTHER DETAIL NOT SHOWN, SEE SECTION F1/14

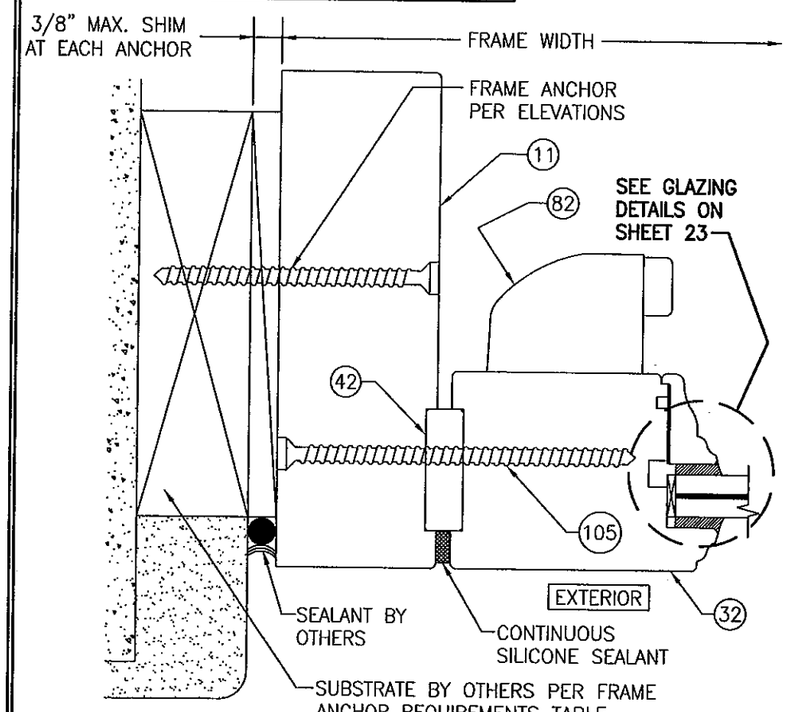

SECTION G1/16
SCALE: 1/2 FULL

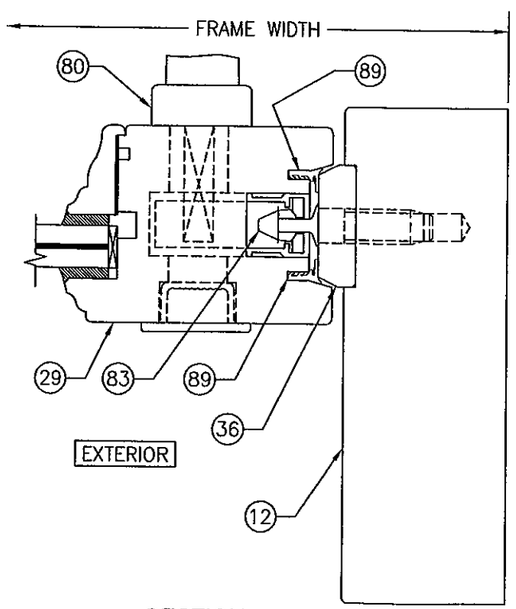

SECTION G2/16
SCALE: 1/2 FULL

FOR INSTALLATION & OTHER DETAIL NOT SHOWN, SEE SECTION G1/16

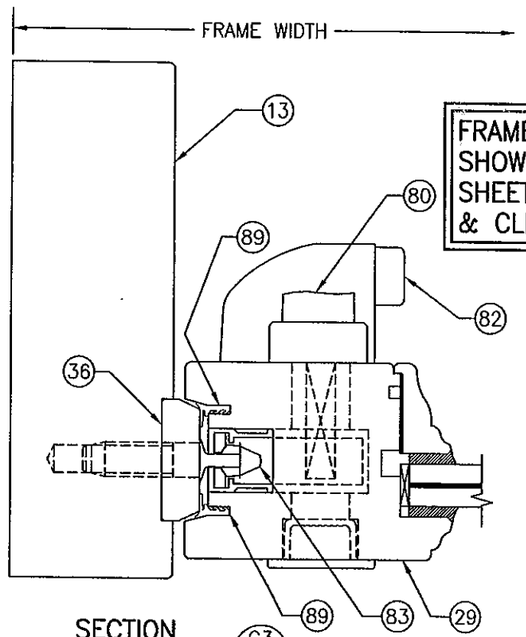

SECTION G3/16
SCALE: 1/2 FULL

FOR INSTALLATION & OTHER DETAIL NOT SHOWN, SEE SECTION G1/16

FRAME SCREW INSTALLATION SHOWN, SEE DETAILS ON SHEET 26 FOR DIRECT MOUNT & CLIP MOUNT DETAILS.

WARREN W. SCHAEFER LICENSE No. 44135 STATE OF FLORIDA PROFESSIONAL ENGINEER

DRAWN BY: S.T.R.	CHECKED BY: W.W.S.
PLOT: 1=2	DATE: 3/18/05

NO.	REVISION DESCRIPTION	BY	DATE

DRAWING TITLE
LIFT & SLIDE WOOD SLIDING GLASS IMPACT DOORS

MANUFACTURER
PEETZ WINDOWS & DOORS
15951 S.W. 41ST STREET; SUITE 150
WESTON, FL 33331
954-659-3887

CONSULTANTS
W. W. SCHAEFER ENGINEERING & CONSULTING, P.A. (CA 6809)
7480 150TH COURT NORTH
PALM BEACH GARDENS, FL 33418
PHONE: 561-744-3424

CERTIFICATION
OCT 19 2011
WARREN W. SCHAEFER, P.E.
P.E. NO. 44135

DRAWING NO. 1321
REV. B
SHEET NO. 16 OF 31

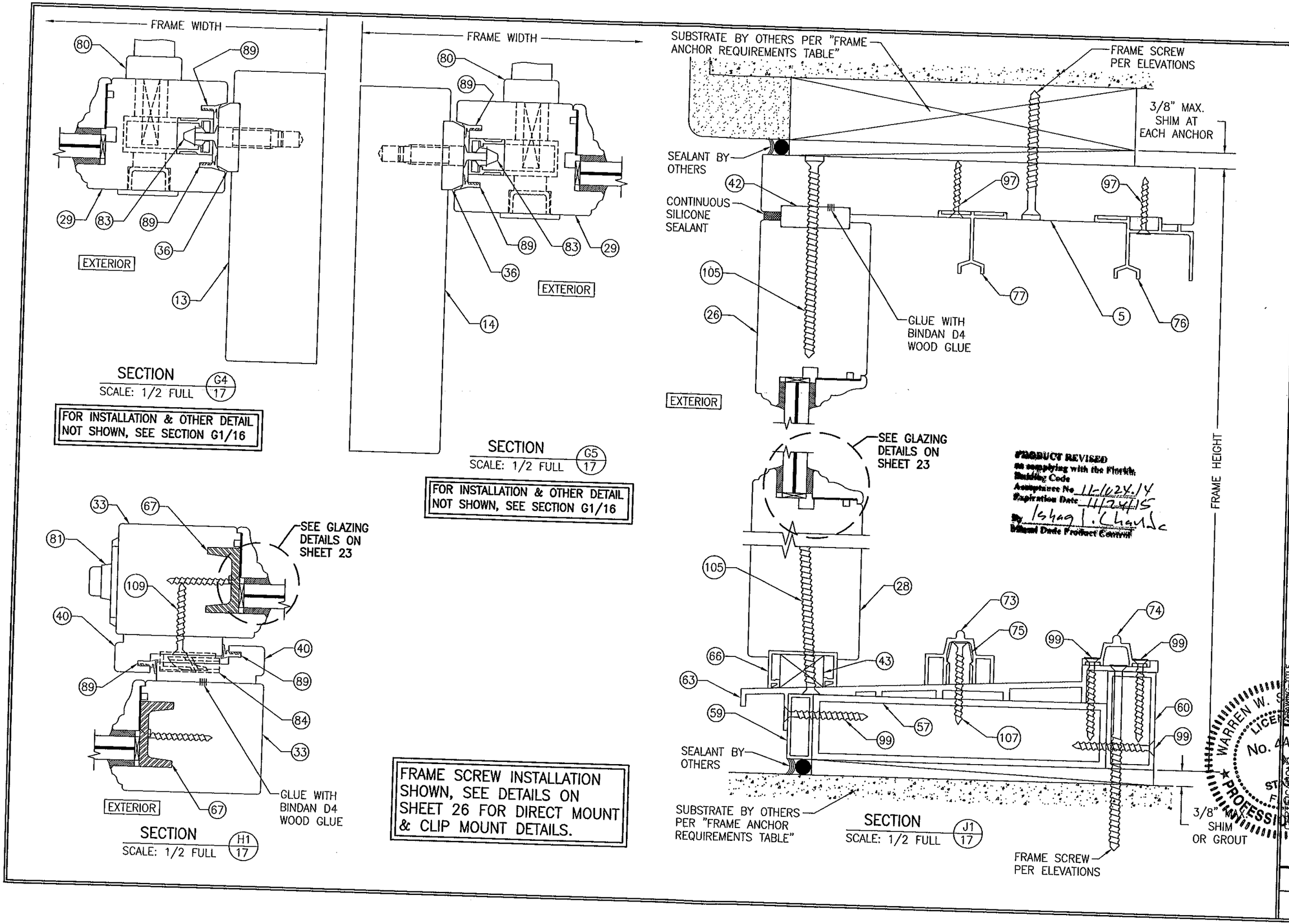

SECTION G4/17
SCALE: 1/2 FULL

FOR INSTALLATION & OTHER DETAIL NOT SHOWN, SEE SECTION G1/16

SECTION G5/17
SCALE: 1/2 FULL

FOR INSTALLATION & OTHER DETAIL NOT SHOWN, SEE SECTION G1/16

SECTION J1/17
SCALE: 1/2 FULL

SECTION H1/17
SCALE: 1/2 FULL

FRAME SCREW INSTALLATION SHOWN, SEE DETAILS ON SHEET 26 FOR DIRECT MOUNT & CLIP MOUNT DETAILS.

PRODUCT REVISED
as complying with the Florida Building Code
Acceptance No. 11-1024.14
Expiration Date 11/24/15
By Ishag I. Chaudc
Miami Dade Product Control

WARREN W. SCHAEFER LICENSE No. 44135 STATE OF FLORIDA PROFESSIONAL ENGINEER
OCT 19 2014

DRAWN BY: S.T.R.	CHECKED BY: W.W.S.
PLOT: 1=2	DATE: 3/18/05

NO.	REVISION DESCRIPTION	BY	DATE

DRAWING TITLE: LIFT & SLIDE WOOD SLIDING GLASS IMPACT DOORS

MANUFACTURER: PEETZ WINDOWS & DOORS
15951 S.W. 41ST STREET; SUITE 150
WESTON, FL 33331
954-659-3887

CONSULTANTS: W. W. SCHAEFER ENGINEERING CONSULTING, P.A. (CA 6809)
7480 150TH COURT NORTH
PALM BEACH GARDENS, FL 33418
PHONE: 561-744-3424

CERTIFICATION: WARREN W. SCHAEFER, P.E. NO. 44135

DRAWING NO.	REV.
1321	B

SHEET NO. 17 OF 31

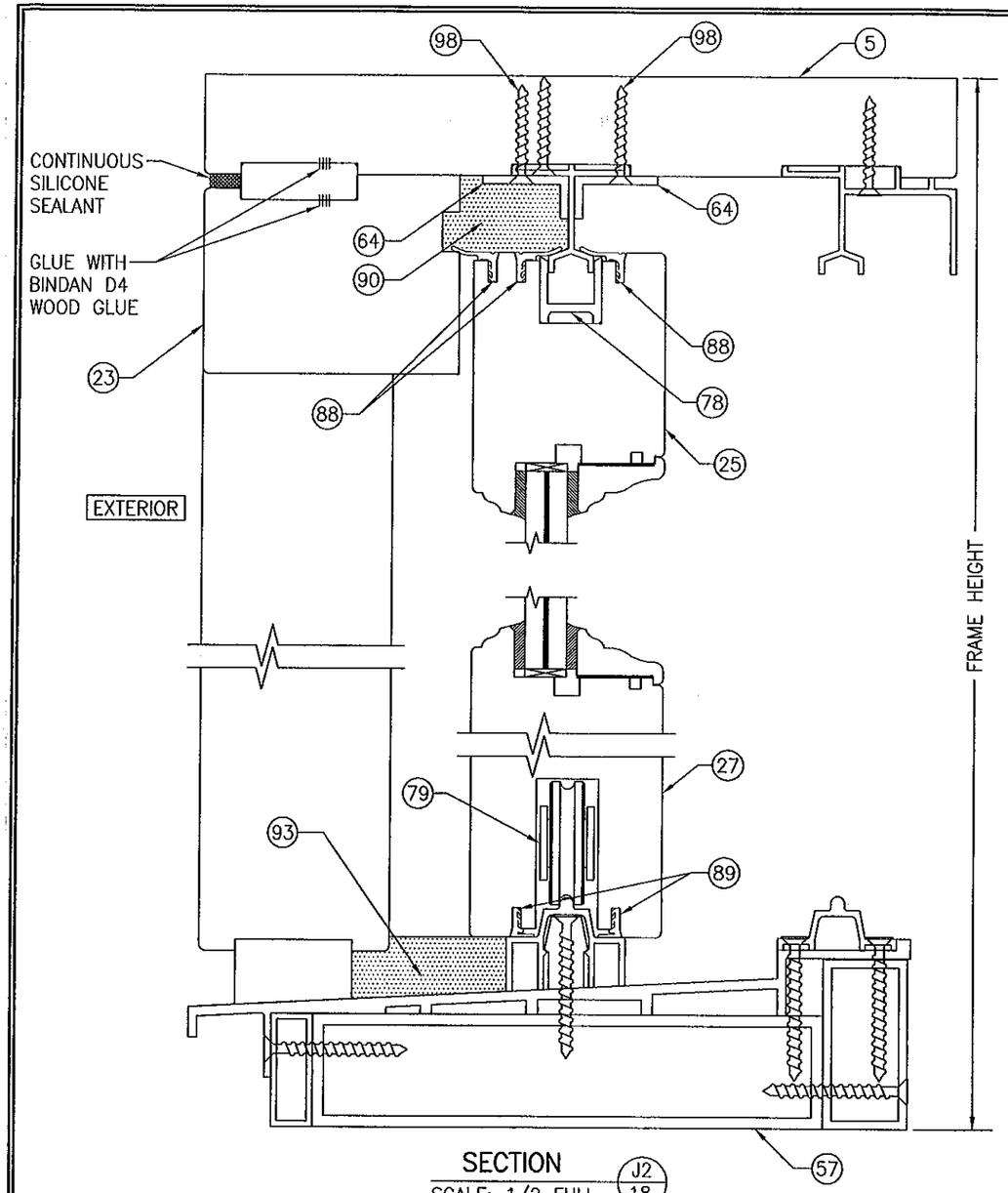

SECTION J2/18
SCALE: 1/2 FULL

FOR INSTALLATION & OTHER DETAIL NOT SHOWN, SEE SECTION J1/17

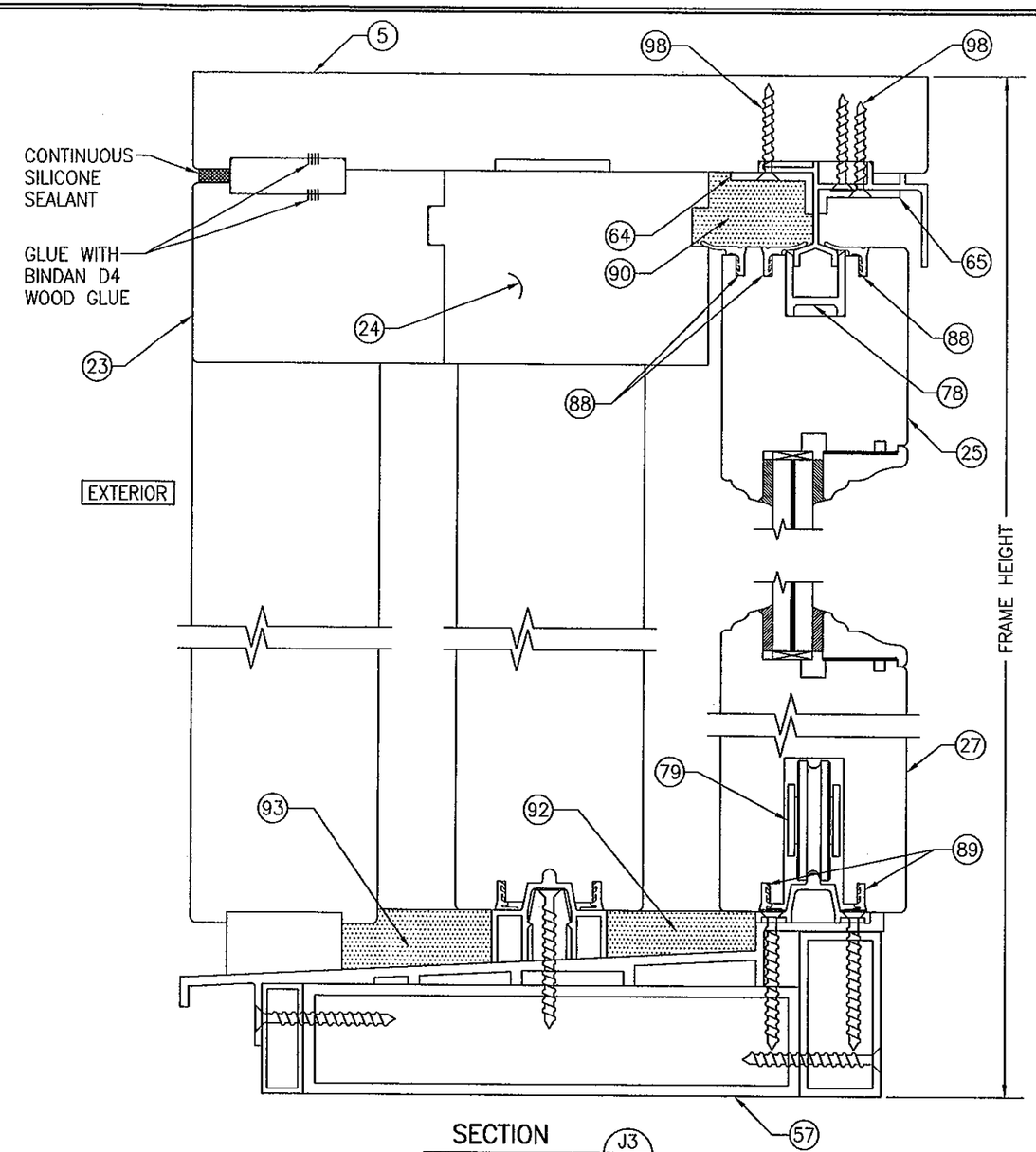

SECTION J3/18
SCALE: 1/2 FULL

FOR INSTALLATION & OTHER DETAIL NOT SHOWN, SEE SECTION J1/17

PRODUCT REVISED
as complying with the Florida Building Code
Acceptance No. 11-1024.14
Expiration Date 11/24/15
By Shang L. Chang
Miami Dade Product Control

WARREN W. SCHAEFER ★ ENGINEER ★ LICENSE No. 44135 ★ STATE OF FLORIDA ★ PROFESSIONAL

DRAWN BY: S.T.R.	CHECKED BY: W.W.S.
PLOT: 1=2	DATE: 3/18/05

NO.	REVISION DESCRIPTION	BY	DATE

DRAWING TITLE
LIFT & SLIDE WOOD SLIDING GLASS IMPACT DOORS

MANUFACTURER
PEETZ WINDOWS & DOORS
15951 S.W. 41ST STREET, SUITE 150
WESTON, FL 33331
954-659-3887

CONSULTANTS
W. W. SCHAEFER ENGINEERING & CONSULTING, P.A. (CA 6809)
7480 150TH COURT NORTH
PALM BEACH GARDENS, FL 33418
PHONE: 561-744-3424

CERTIFICATION
OCT 19 2011
WARREN W. SCHAEFER, P.E.
P.E. NO. 44135

DRAWING NO. 1321
REV. B
SHEET NO. 18 OF 31

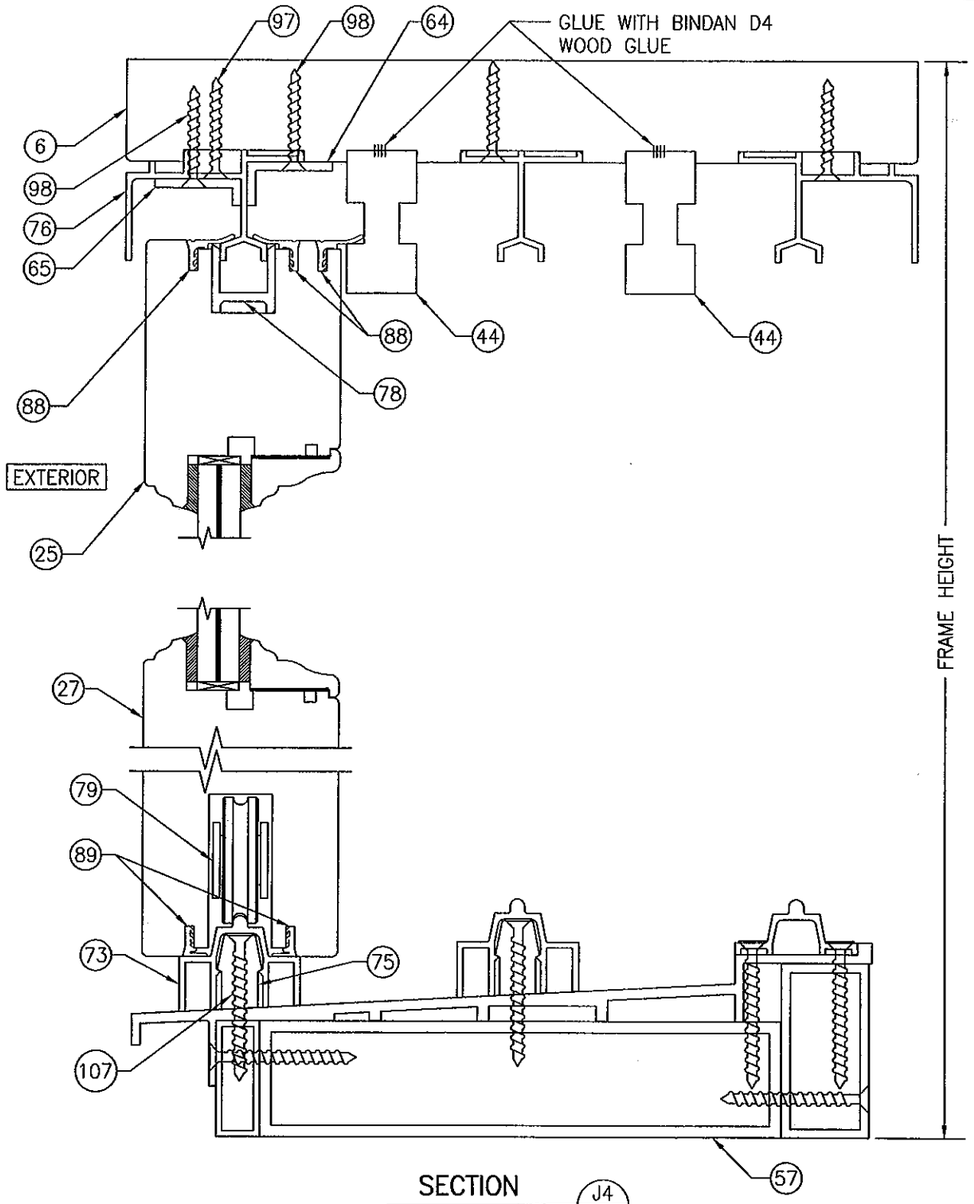

SECTION J4/19
SCALE: 1/2 FULL

FOR INSTALLATION & OTHER DETAIL NOT SHOWN, SEE SECTION J1/17

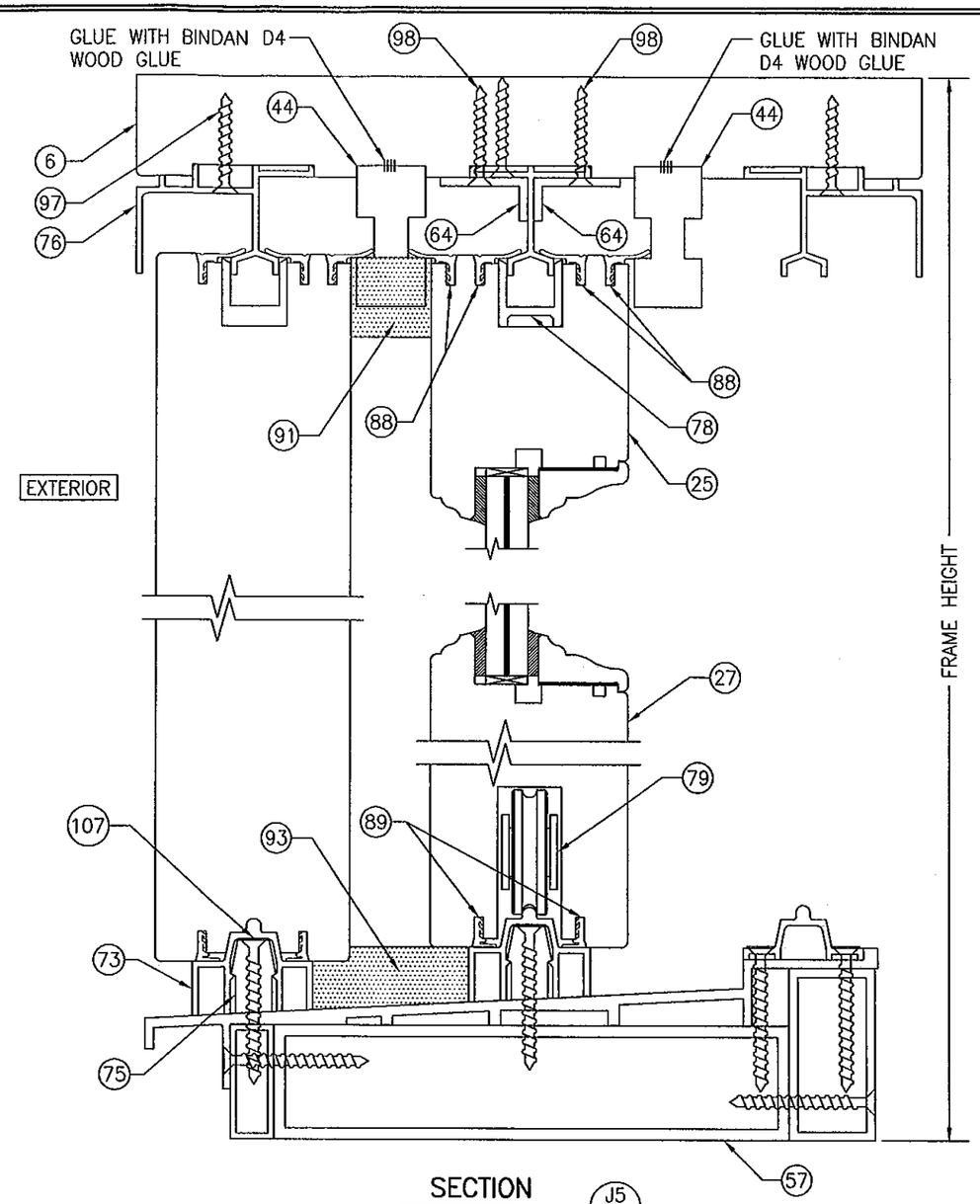

SECTION J5/19
SCALE: 1/2 FULL

FOR INSTALLATION & OTHER DETAIL NOT SHOWN, SEE SECTION J1/17

PRODUCT REVISED
as complying with the Florida
Building Code
Acceptance No 11-1024.14
Expiration Date 11/24/15
By Ishaq I. Chand
Miami Dade Product Control

WARREN W. SCHAEFER ★ ENGINEER
LICENSE No. 44135 ★ STATE OF FLORIDA
★ PROFESSIONAL ENGINEER

DRAWN BY: S.T.R.	CHECKED BY: W.W.S.
PLOT: 1=2	DATE: 3/18/05

NO.	REVISION DESCRIPTION	BY	DATE

DRAWING TITLE
LIFT & SLIDE WOOD SLIDING GLASS IMPACT DOORS

MANUFACTURER
PEETZ WINDOWS & DOORS
15951 S.W. 41ST STREET; SUITE 150
WESTON, FL 33331
954-659-3887

CONSULTANTS
W. W. SCHAEFER ENGINEERING & CONSULTING, P.A. (CA 6809)
7480 150TH COURT NORTH
PALM BEACH GARDENS, FL 33418
PHONE: 561-744-3424

CERTIFICATION
OCT 19 2011
WARREN W. SCHAEFER, P.E.
P.E. NO. 44135

DRAWING NO. 1321
REV. B
SHEET NO. 19 OF 31

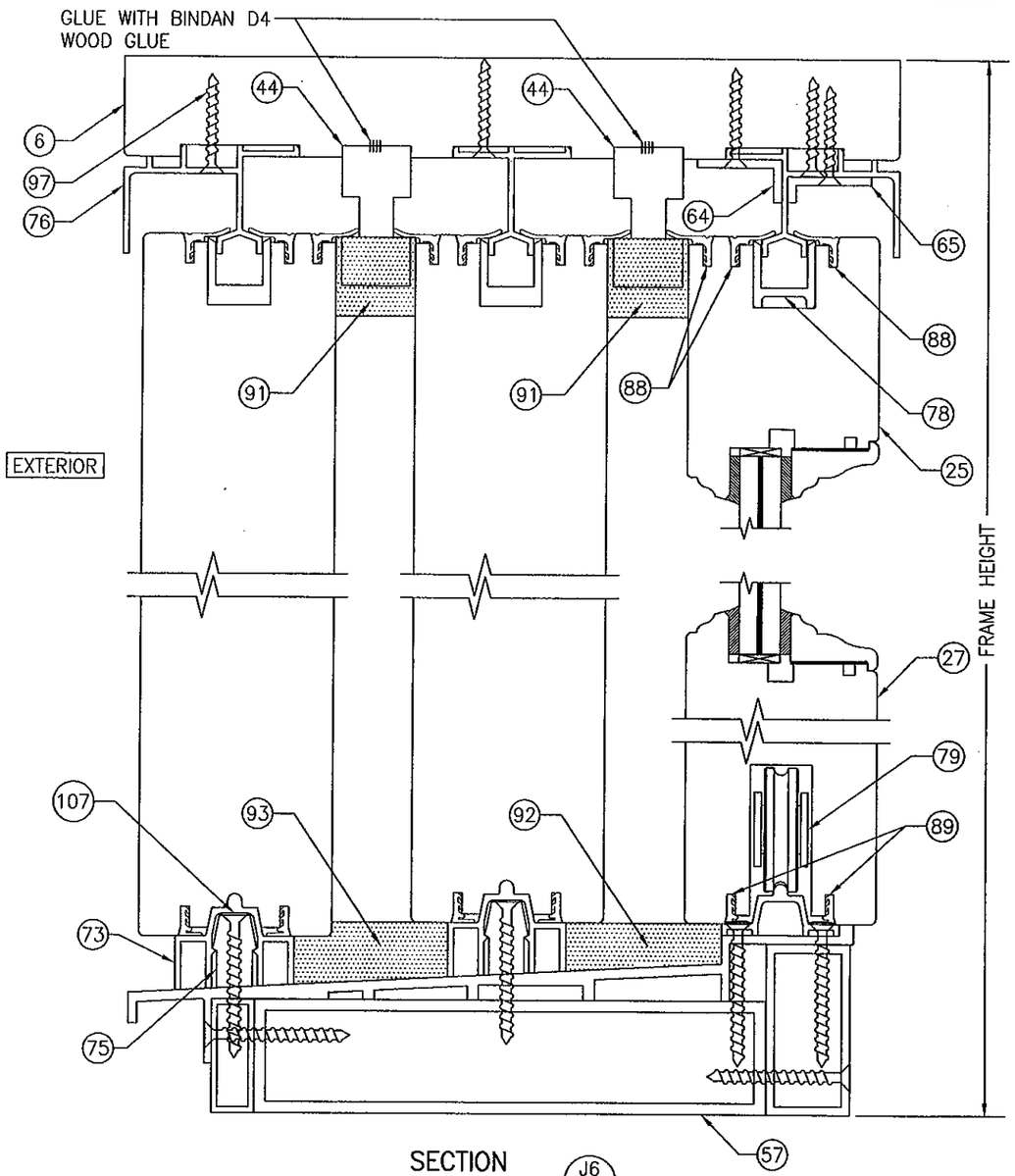

SECTION J6/20
SCALE: 1/2 FULL

FOR INSTALLATION & OTHER DETAIL NOT SHOWN, SEE SECTION J1/17

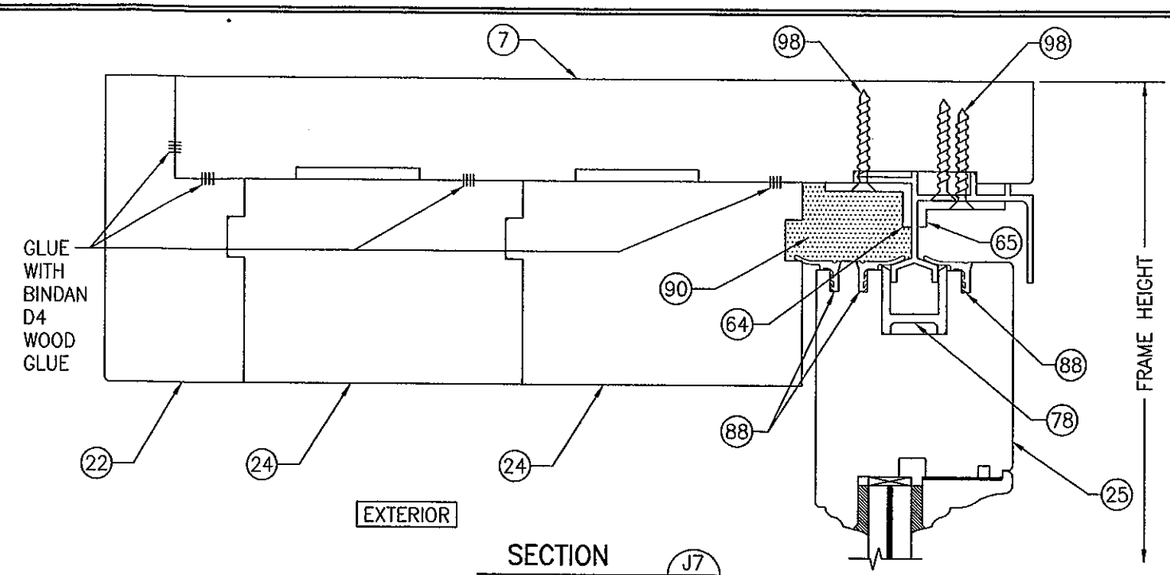

SECTION J7/20
SCALE: 1/2 FULL
(FOR SILL DETAIL NOT SHOWN, SEE SECTION J3/18)

FOR INSTALLATION & OTHER DETAIL NOT SHOWN, SEE SECTION J1/17

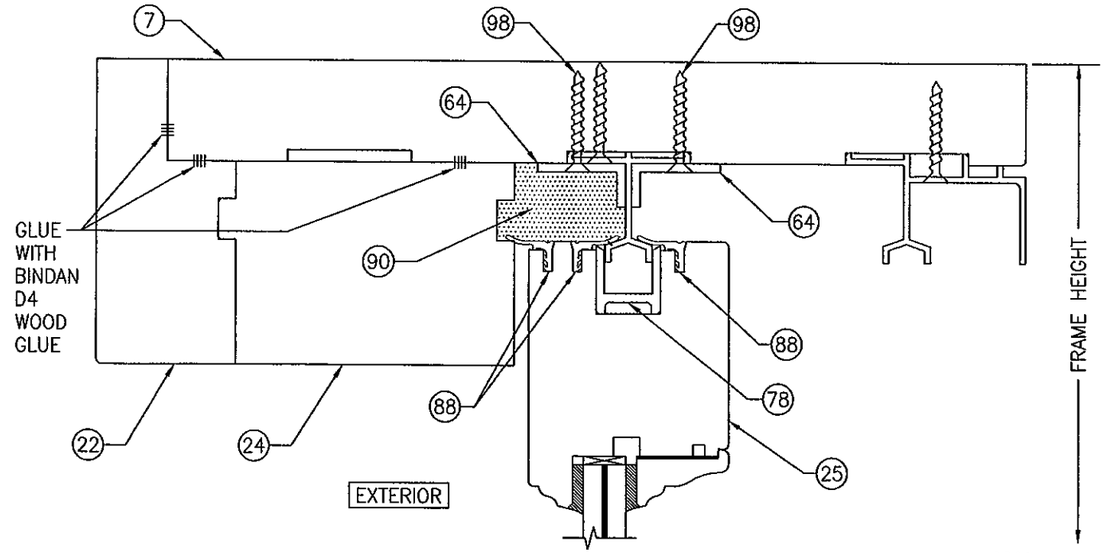

SECTION J8/20
SCALE: 1/2 FULL
(FOR SILL DETAIL NOT SHOWN, SEE SECTION J2/18)

FOR INSTALLATION & OTHER DETAIL NOT SHOWN, SEE SECTION J1/17

PRODUCT REVISED
in complying with the Florida
Building Code
Acceptance No. 11-1024.14
Expiration Date 11/24/15
By Shaq L. Clark
Miami Dade Product Control

WARREN W. SCHAEFER LICENSE No. 44135 STATE OF FLORIDA PROFESSIONAL ENGINEER

NO.	REVISION DESCRIPTION	BY	DATE

DRAWN BY: S.T.R.
CHECKED BY: W.W.S.
PLOT: 1=2
DATE: 3/18/05

DRAWING TITLE
LIFT & SLIDE WOOD SLIDING GLASS IMPACT DOORS

MANUFACTURER
PEETZ WINDOWS & DOORS
15951 S.W. 41ST STREET; SUITE 150
WESTON, FL 33331
954-659-3887

CONSULTANTS
W. W. SCHAEFER ENGINEERING & CONSULTING, P.A. (CA 6809)
7480 150TH COURT NORTH
PALM BEACH GARDENS, FL 33418
PHONE: 561-744-3424

CERTIFICATION
OCT 19 2011
WARREN W. SCHAEFER, P.E.
P.E. NO. 44135

DRAWING NO. 1321
REV. B
SHEET NO. 20 OF 31

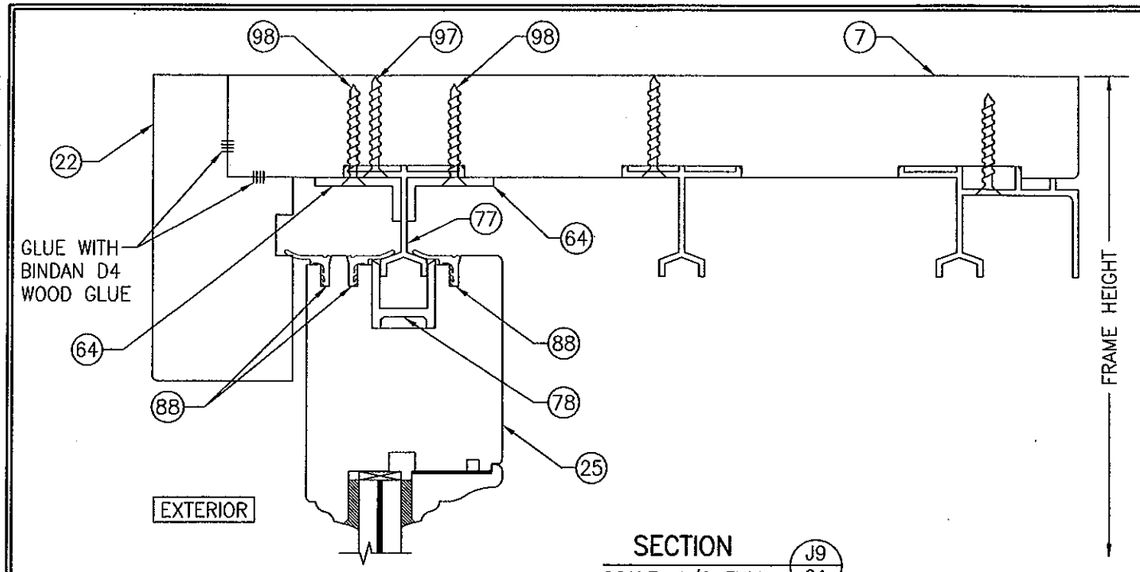

SECTION J9/21
SCALE: 1/2 FULL
(FOR SILL DETAIL NOT SHOWN, SEE SECTION J4/19)

FOR INSTALLATION & OTHER DETAIL NOT SHOWN, SEE SECTION J1/17

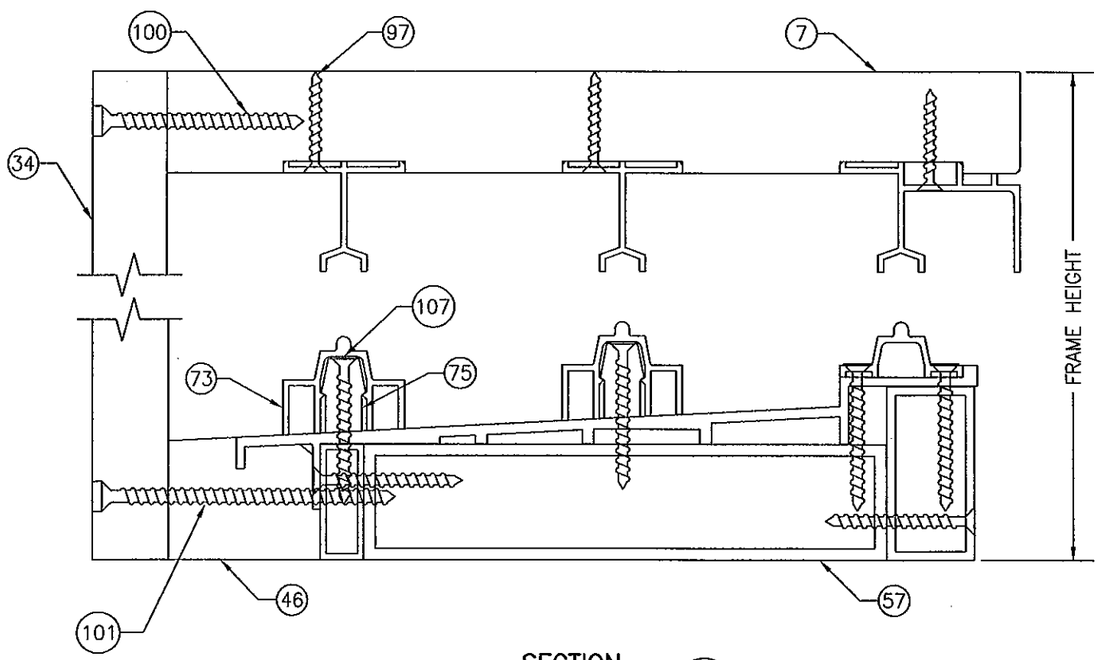

SECTION J10/21
SCALE: 1/2 FULL

FOR INSTALLATION & OTHER DETAIL NOT SHOWN, SEE SECTION J1/17

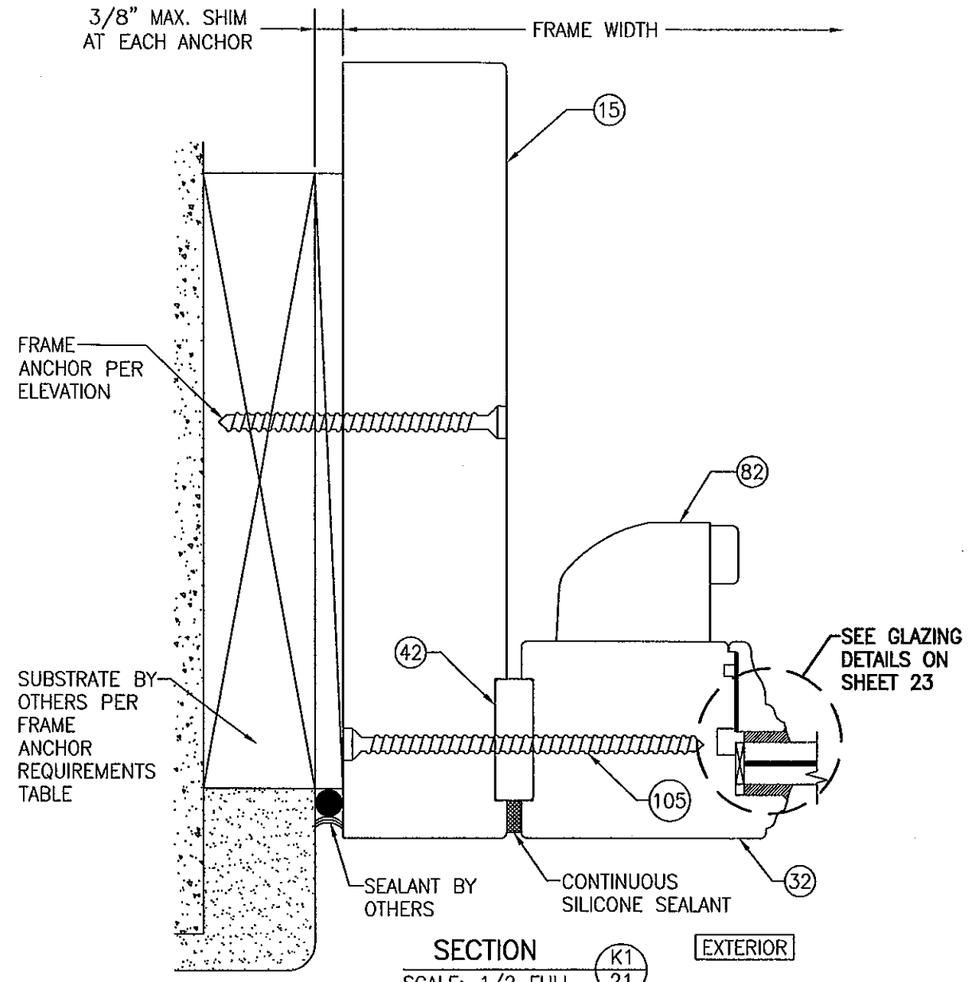

SECTION K1/21
SCALE: 1/2 FULL

FRAME SCREW INSTALLATION SHOWN, SEE DETAILS ON SHEET 26 FOR DIRECT MOUNT & CLIP MOUNT DETAILS.

PRODUCT REVISED
as complying with the Florida Building Code
Acceptance No. 11-1024.14
Expiration Date 11/24/15
By Ishag I. Chanda
Miami Dade Product Control

WARREN W. SCHAEFER ★ LICENSE No. 44135 ★ STATE OF FLORIDA ★ PROFESSIONAL ENGINEER

DRAWN BY: S.T.R.	CHECKED BY: W.W.S.
PLOT: 1=2	DATE: 3/18/05

NO.	REVISION DESCRIPTION	BY	DATE

DRAWING TITLE
LIFT & SLIDE WOOD SLIDING GLASS IMPACT DOORS

MANUFACTURER
PEETZ WINDOWS & DOORS
15951 S.W. 41ST STREET; SUITE 150
WESTON, FL 33331
954-659-3887

CONSULTANTS
W. W. SCHAEFER ENGINEERING & CONSULTING, P.A. (CA 6809)
7480 150TH COURT NORTH
PALM BEACH GARDENS, FL 33418
PHONE: 561-744-3424

CERTIFICATION
OCT 19 2011
WARREN W. SCHAEFER, P.E.
P.E. NO. 44135

DRAWING NO. 1321
REV. B
SHEET NO. 21 OF 31

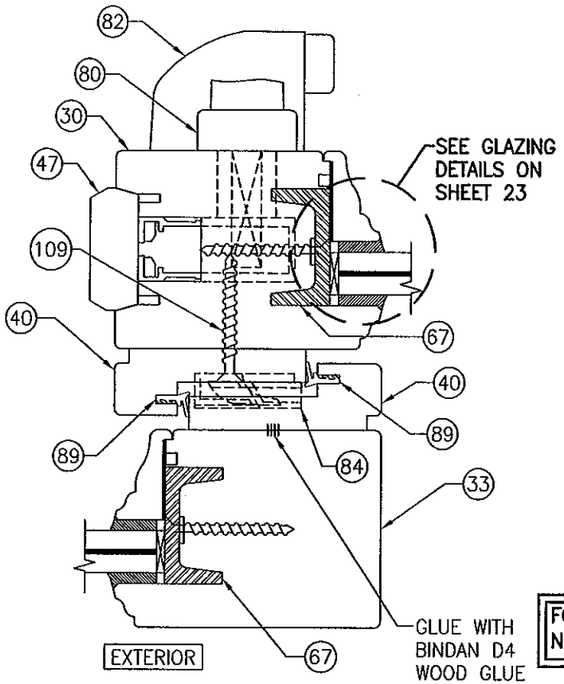

SECTION H2/22
SCALE: 1/2 FULL

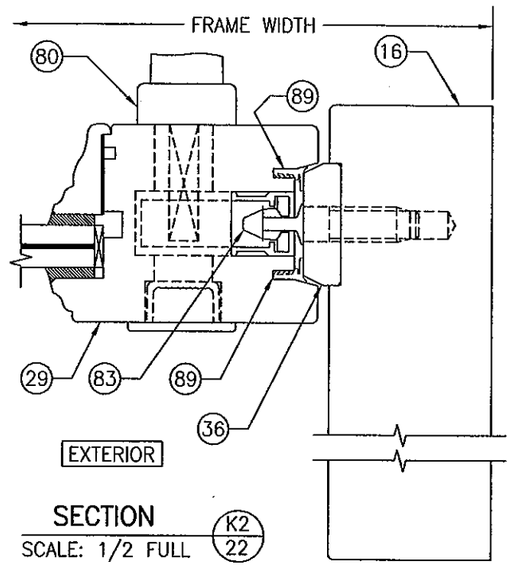

SECTION K2/22
SCALE: 1/2 FULL

FOR INSTALLATION & OTHER DETAIL NOT SHOWN, SEE SECTION K1/21

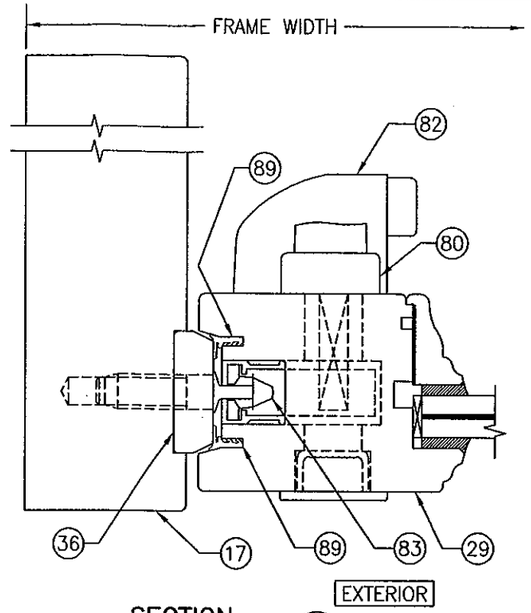

SECTION K3/22
SCALE: 1/2 FULL

FOR INSTALLATION & OTHER DETAIL NOT SHOWN, SEE SECTION K1/21

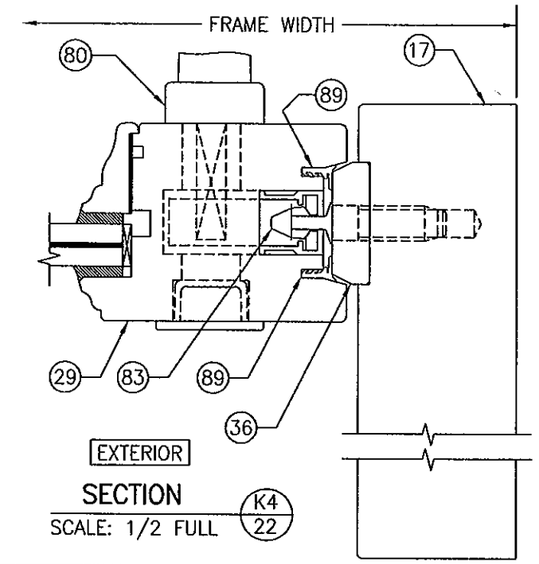

SECTION K4/22
SCALE: 1/2 FULL

FOR INSTALLATION & OTHER DETAIL NOT SHOWN, SEE SECTION K/21

PRODUCT REVISED
to complying with the Florida
Building Code
Acceptance No. 11-1024.14
Expiration Date 11/24/15
By Ishaq I. Chanda
Manal Dade Product Control

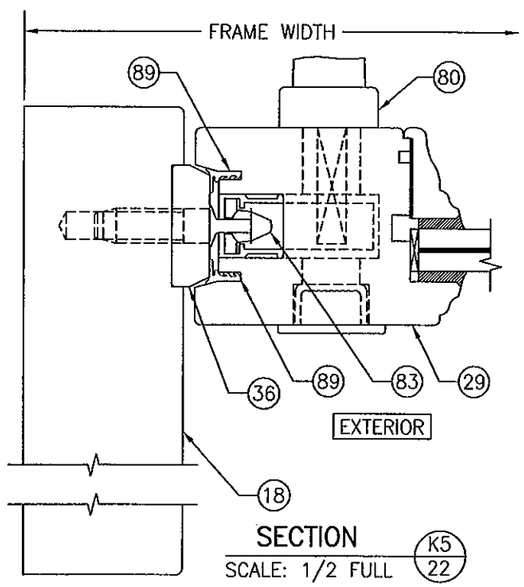

SECTION K5/22
SCALE: 1/2 FULL

FOR INSTALLATION & OTHER DETAIL NOT SHOWN, SEE SECTION K/21

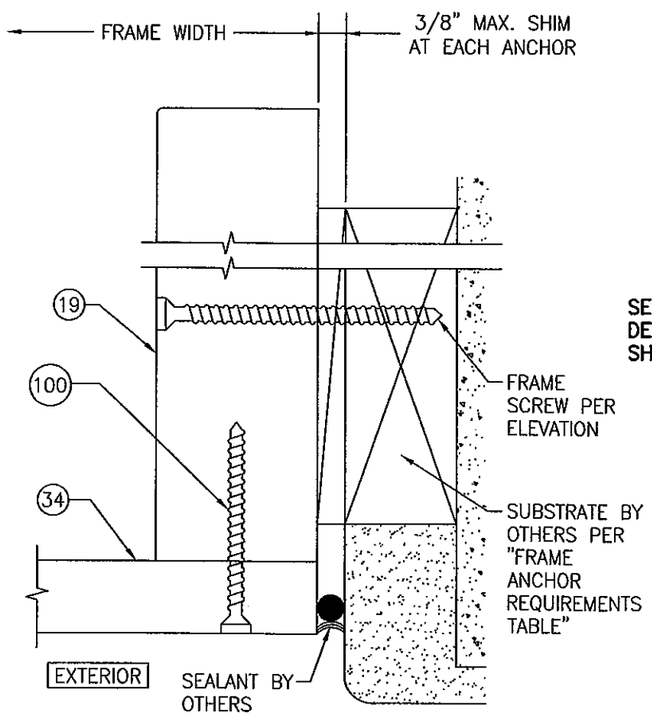

SECTION K6/22
SCALE: 1/2 FULL

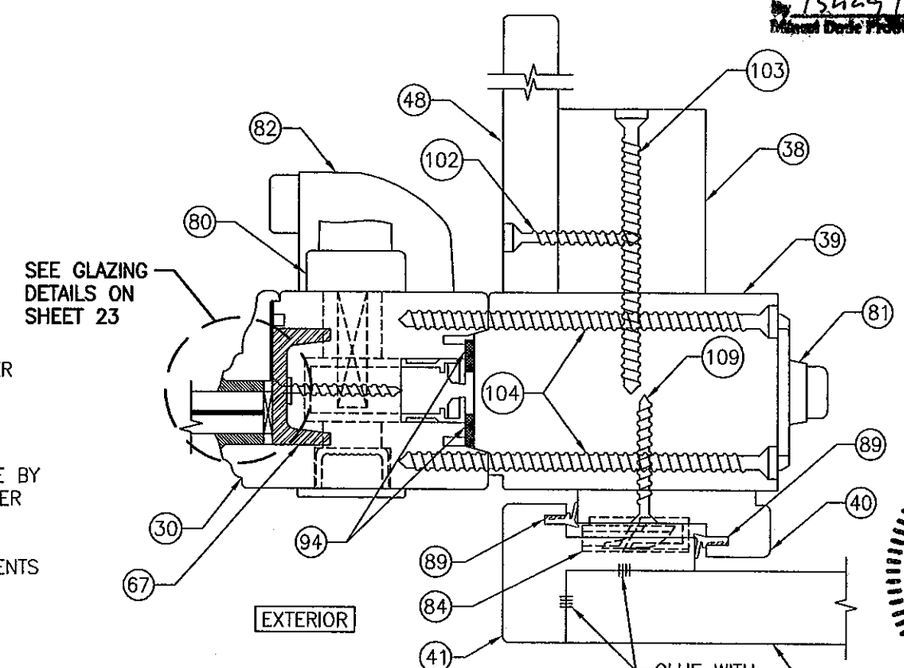

SECTION C2/22
SCALE: 1/2 FULL

DRAWN BY: S.T.R.	CHECKED BY: W.W.S.
PLOT: 1=2	DATE: 3/18/05

NO.	REVISION DESCRIPTION	BY	DATE

DRAWING TITLE
LIFT & SLIDE WOOD SLIDING GLASS IMPACT DOORS

MANUFACTURER
PEETZ WINDOWS & DOORS
15951 S.W. 41ST STREET; SUITE 150
WESTON, FL 33331
954-659-3887

CONSULTANTS
W. W. SCHAEFER ENGINEERING & CONSULTING, P.A. (CA 6809)
7480 150TH COURT NORTH
PALM BEACH GARDENS, FL 33418
PHONE: 561-744-3424

WARREN W. SCHAEFER, P.E.
P.E. NO. 44135

WARREN W. SCHAEFER LICENSE No. 44135 STATE OF FLORIDA PROFESSIONAL ENGINEER

DRAWING NO. 1321 REV. B

SHEET NO. 22 OF 31

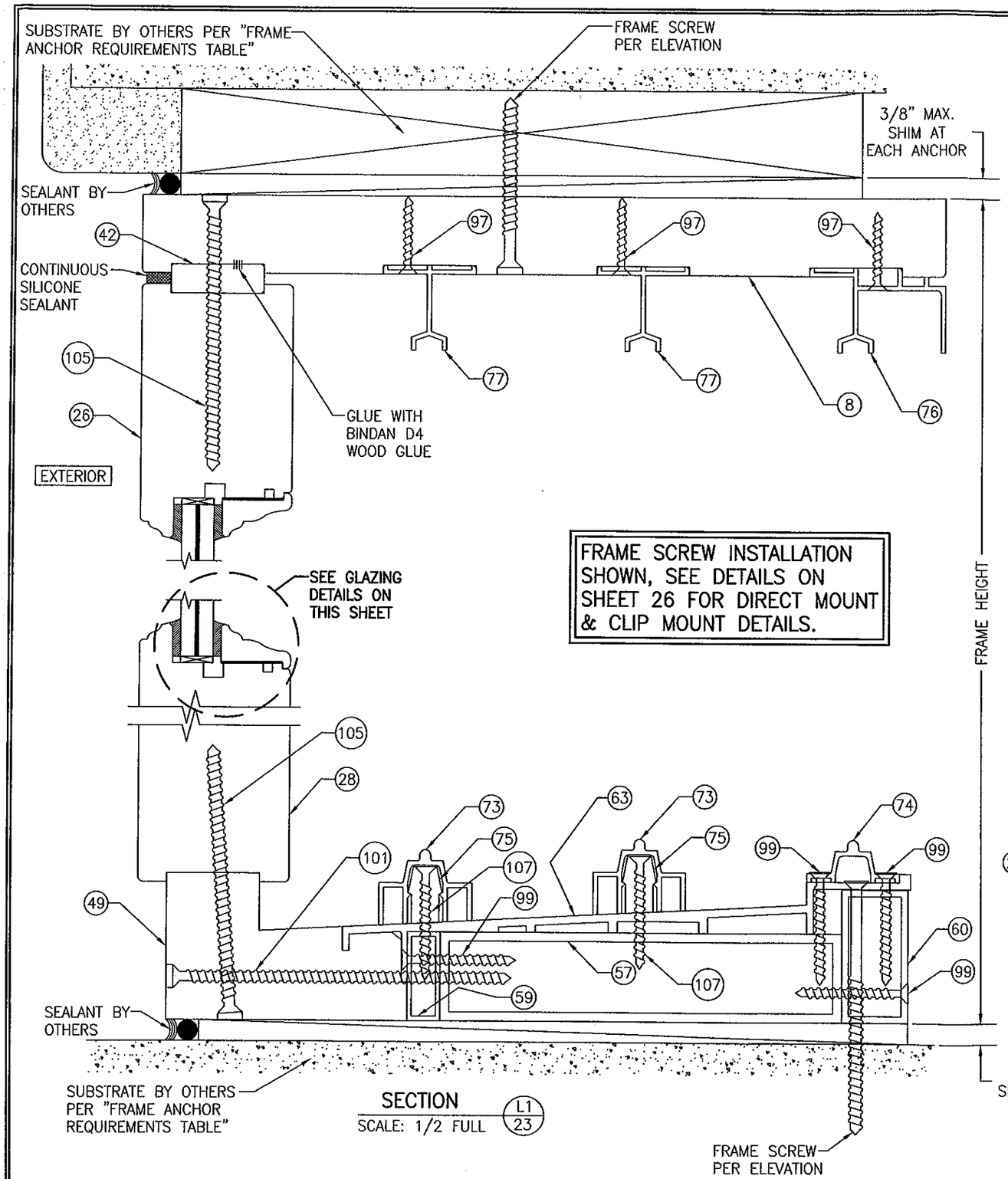

FRAME SCREW INSTALLATION SHOWN, SEE DETAILS ON SHEET 26 FOR DIRECT MOUNT & CLIP MOUNT DETAILS.

SECTION L1/23
SCALE: 1/2 FULL

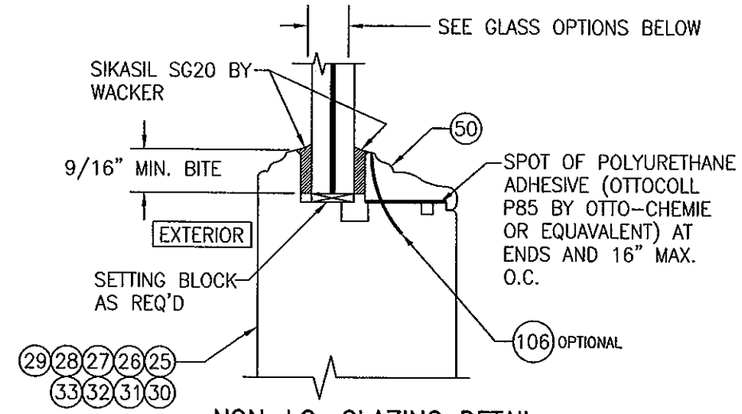

NON-I.G. GLAZING DETAIL
GLASS OPTIONS 1, 2 & 3

GLASS OPTION 1: 1/2" LAMINATED GLASS (3/16" H.S./0.075" SOLUTIA VANCEVA/1/4" H.S.)

GLASS OPTION 2: 9/16" LAMINATED GLASS (3/16" H.S./0.12" SOLUTIA SALFEX IIIG PVB/1/4" H.S.)

GLASS OPTION 3: 9/16" LAMINATED GLASS (1/4" H.S./0.075" SOLUTIA VANCEVA/1/4" H.S.)

PRODUCT REVISED
as complying with the Florida Building Code
Acceptance No. 11-1024.14
Expiration Date 11/24/15
By Ishaq J. Chaus
Miami Dade Product Control

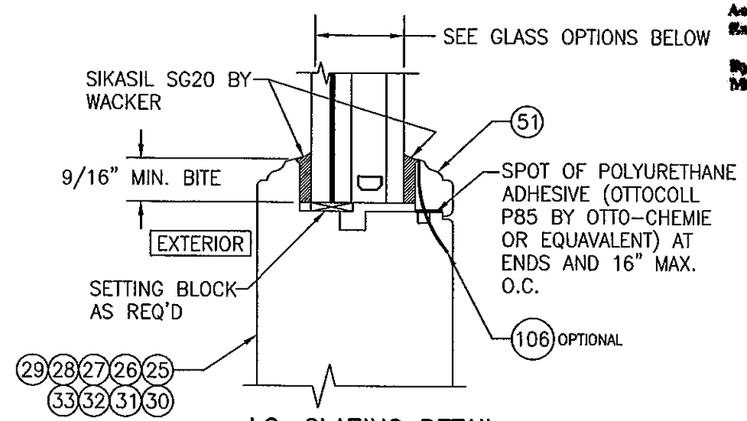

I.G. GLAZING DETAIL
GLASS OPTIONS 4 & 5

GLASS OPTION 4: 1 1/4" LAMINATED I.G. (3/16" H.S./0.12" SOLUTIA SALFEX IIIG PVB/1/4" H.S./1/2" AIR SPACE/3/16 TEMP.)

GLASS OPTION 5: 1 5/16" LAMINATED I.G. (1/4" H.S./0.075" SOLUTIA VANCEVA/1/4" H.S./1/2" AIR SPACE/1/4 TEMP.)

WARREN W. SCHAEFER ★ LICENSE No. 44135 ★ STATE OF FLORIDA ★ PROFESSIONAL ENGINEER

DRAWN BY: S.T.R.	CHECKED BY: W.W.S.
PLOT: 1=2	DATE: 3/18/05

NO.	REVISION DESCRIPTION	BY	DATE

DRAWING TITLE
LIFT & SLIDE WOOD SLIDING GLASS IMPACT DOORS

MANUFACTURER
PEETZ WINDOWS & DOORS
15951 S.W. 41ST STREET; SUITE 150
WESTON, FL 33331
954-659-3887

CONSULTANTS
W. W. SCHAEFER ENGINEERING & CONSULTING, P.A. (CA 6809)
7480 150TH COURT NORTH
PALM BEACH GARDENS, FL 33418
PHONE: 561-744-3424

CERTIFICATION
OCT 19 2011
WARREN W. SCHAEFER, P.E.
P.E. NO. 44135

DRAWING NO. 1321 REV. B
SHEET NO. 23 OF 31

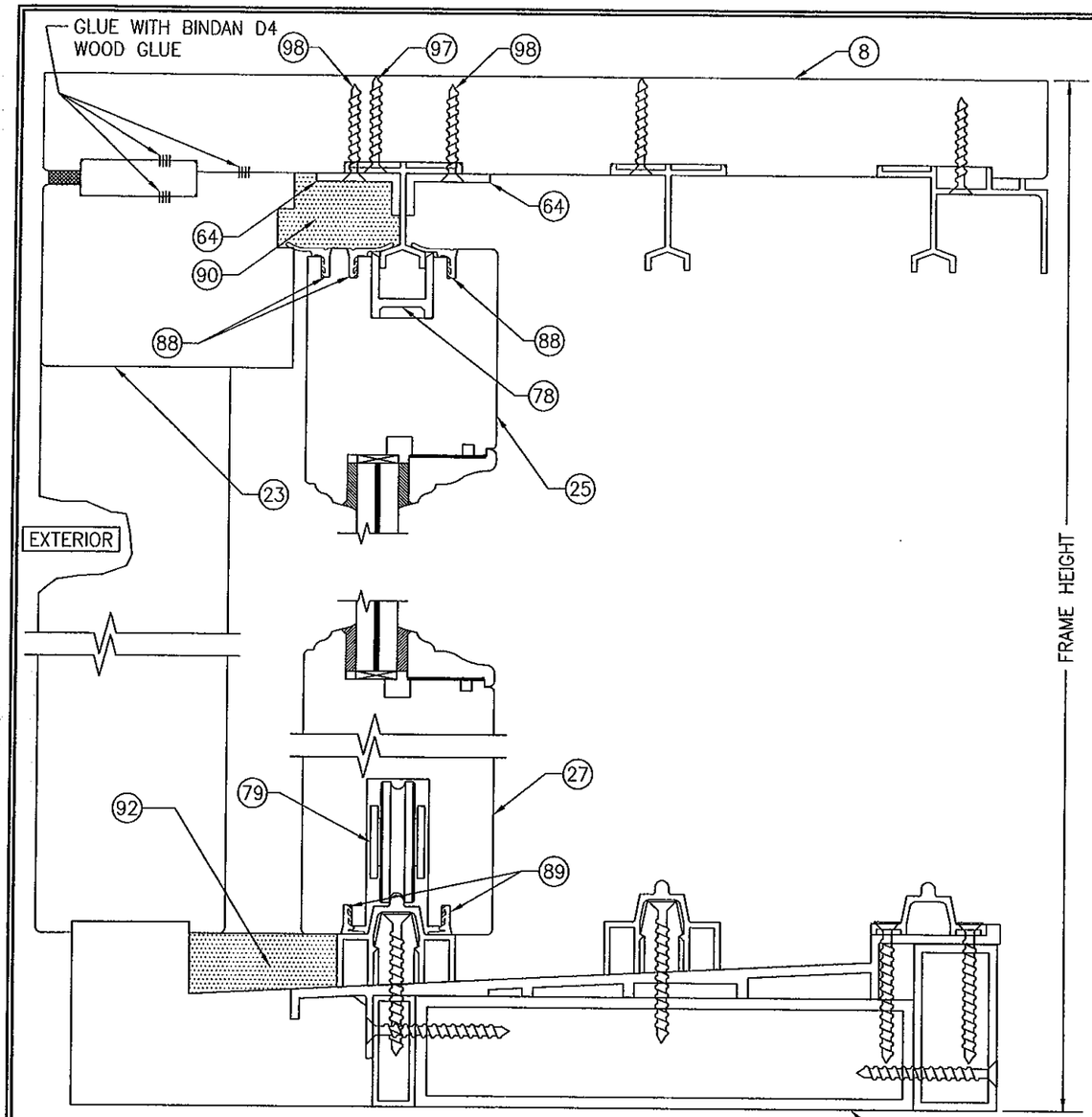

SECTION L2/24
SCALE: 1/2 FULL

FOR INSTALLATION & OTHER DETAIL NOT SHOWN, SEE SECTION L1/23

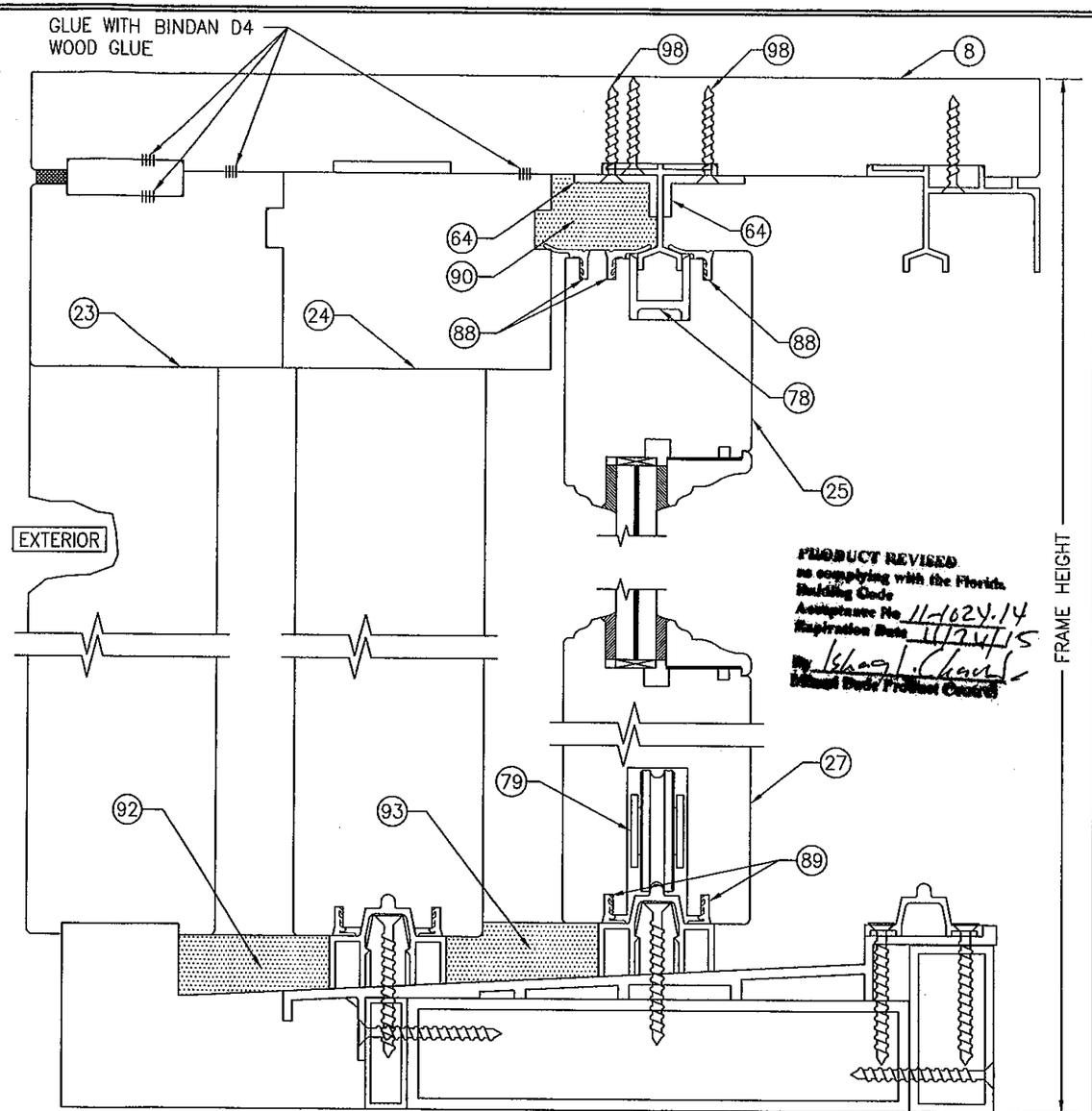

SECTION L3/24
SCALE: 1/2 FULL

FOR INSTALLATION & OTHER DETAIL NOT SHOWN, SEE SECTION L1/23

PRODUCT REVISED
as complying with the Florida Building Code
Acceptance No. 11-1024.14
Expiration Date 11/24/15
By Ishag L. Chaudhry
Miami Dade Product Control

WARREN W. SCHAEFER ★ LICENSE No. 44135 ★ STATE OF FLORIDA ★ PROFESSIONAL ENGINEER

DRAWN BY: S.T.R.	CHECKED BY: W.W.S.
PLOT: 1=2	DATE: 3/18/05

NO.	REVISION DESCRIPTION	BY	DATE

DRAWING TITLE
LIFT & SLIDE WOOD SLIDING GLASS IMPACT DOORS

MANUFACTURER
PEETZ WINDOWS & DOORS
15951 S.W. 41ST STREET; SUITE 150
WESTON, FL 33331
954-659-3887

CONSULTANTS
W. W. SCHAEFER ENGINEERING & CONSULTING, P.A. (CA 6809)
7480 150TH COURT NORTH
PALM BEACH GARDENS, FL 33418
PHONE: 561-744-3424

CERTIFICATION
OCT 19 2011
WARREN W. SCHAEFER, P.E.
P.E. NO. 44135

DRAWING NO. 1321 REV. B
SHEET NO. 24 OF 31

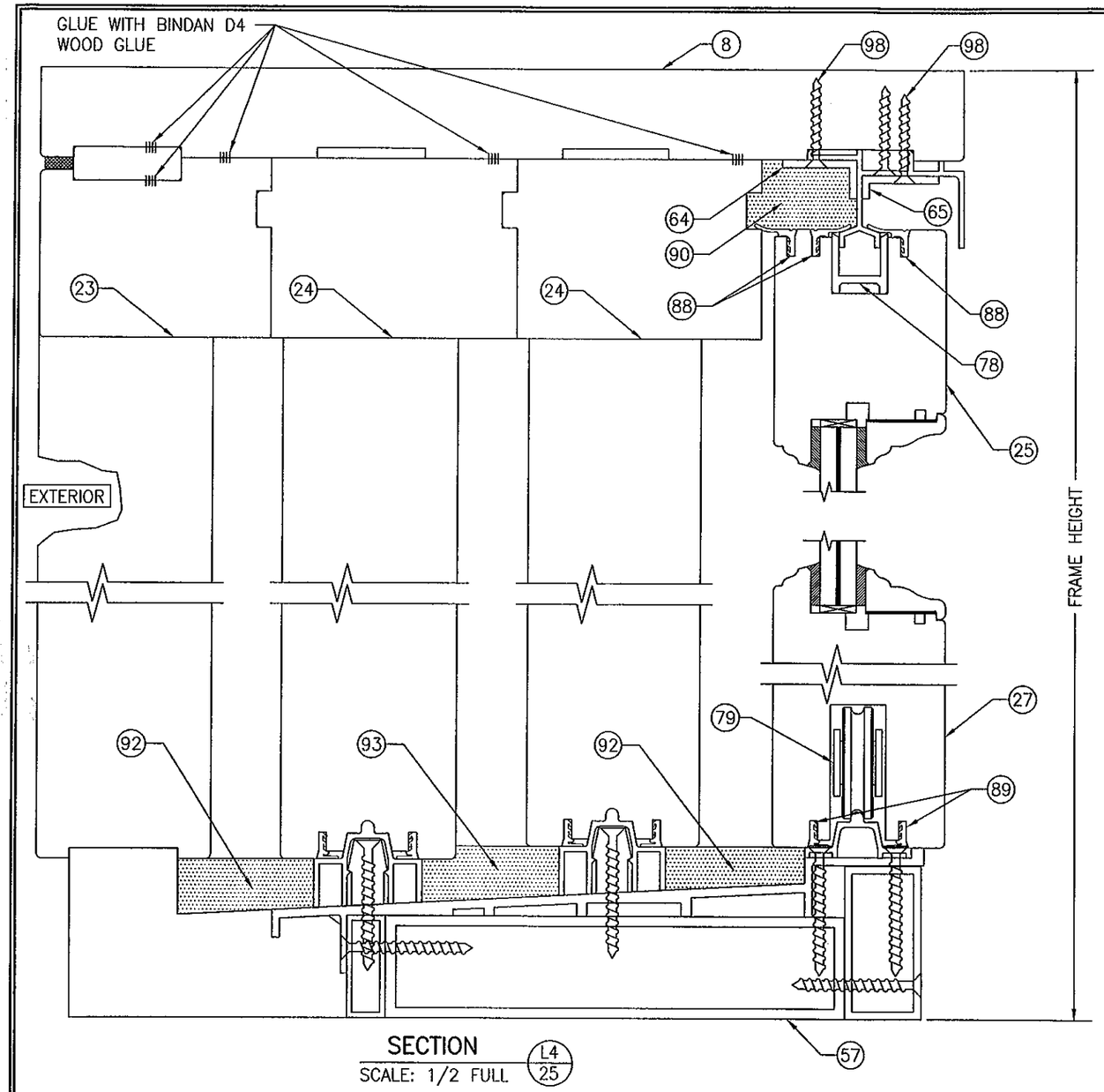

SECTION L4/25
SCALE: 1/2 FULL

FOR INSTALLATION & OTHER DETAIL NOT SHOWN, SEE SECTION L1/23

FRAME SCREW INSTALLATION SHOWN, SEE DETAILS ON SHEET 26 FOR DIRECT MOUNT & CLIP MOUNT DETAILS.

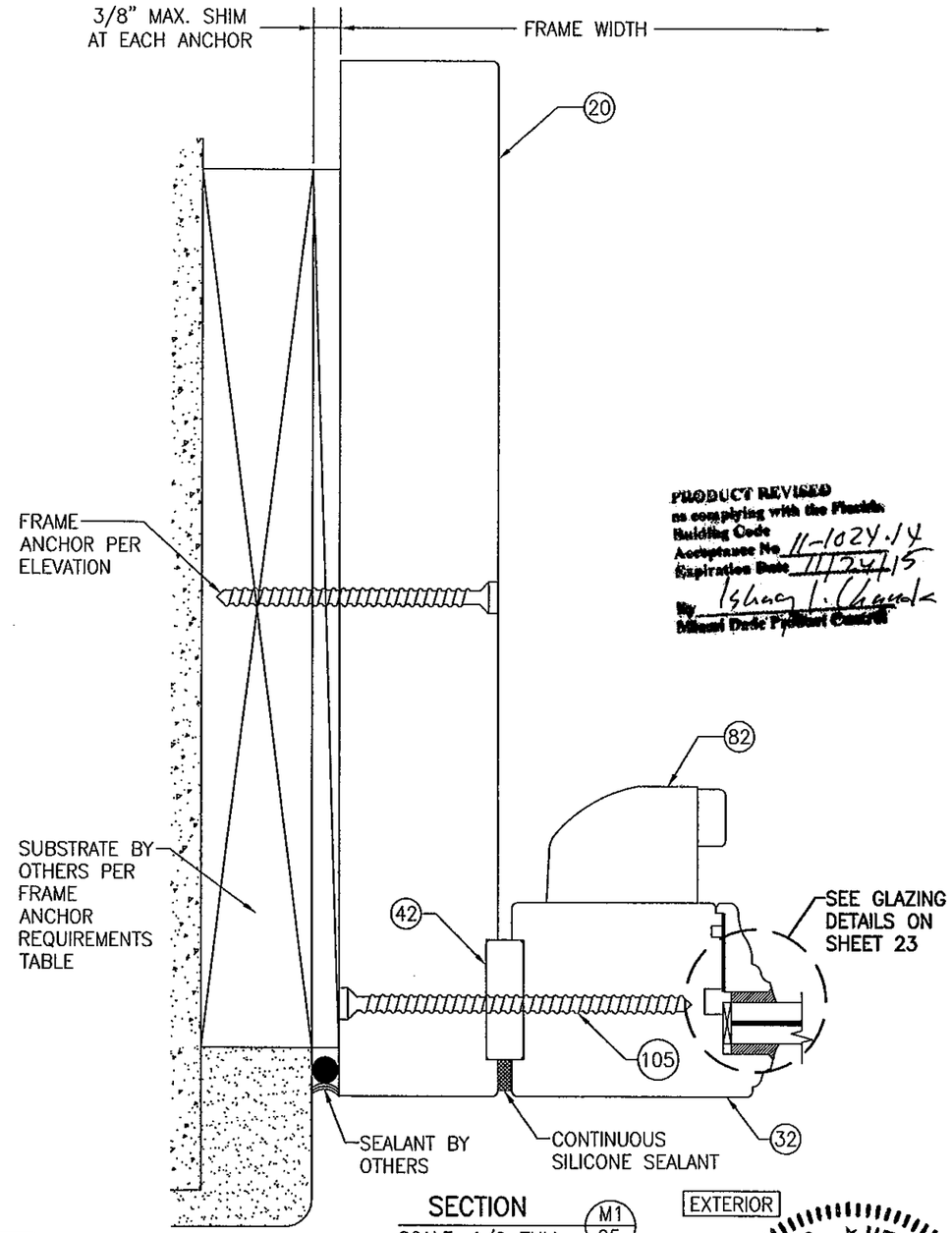

SECTION M1/25
SCALE: 1/2 FULL

PRODUCT REVISED
as complying with the Florida
Building Code
Acceptance No. 11-1024.14
Expiration Date 11/24/15
By Ishaq I. Chanda
Miami Dade Product Control

WARREN W. SCHAEFER ★ PROFESSIONAL ENGINEER ★ LICENSE No. 44135 STATE OF FLORIDA

DRAWN BY: S.T.R.	CHECKED BY: W.W.S.
PLOT: 1=2	DATE: 3/18/05

NO.	REVISION DESCRIPTION	BY	DATE

DRAWING TITLE
LIFT & SLIDE WOOD SLIDING GLASS IMPACT DOORS

MANUFACTURER
PEETZ WINDOWS & DOORS
15951 S.W. 41ST STREET; SUITE 150
WESTON, FL 33331
954-659-3887

CONSULTANTS
W. W. SCHAEFER ENGINEERING & CONSULTING, P.A. (CA 6809)
7480 150TH COURT NORTH
PALM BEACH GARDENS, FL 33418
PHONE: 561-744-3424

CERTIFICATION
OCT 19 2011
WARREN W. SCHAEFER, P.E.
P.E. NO. 44135

DRAWING NO. 1321 REV. B
SHEET NO. 25 OF 31

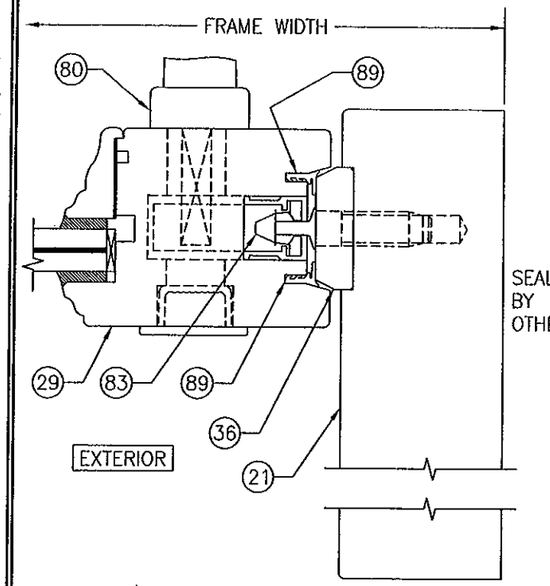

SECTION M2/26
SCALE: 1/2 FULL

FOR INSTALLATION & OTHER DETAIL NOT SHOWN, SEE SECTION M1/25

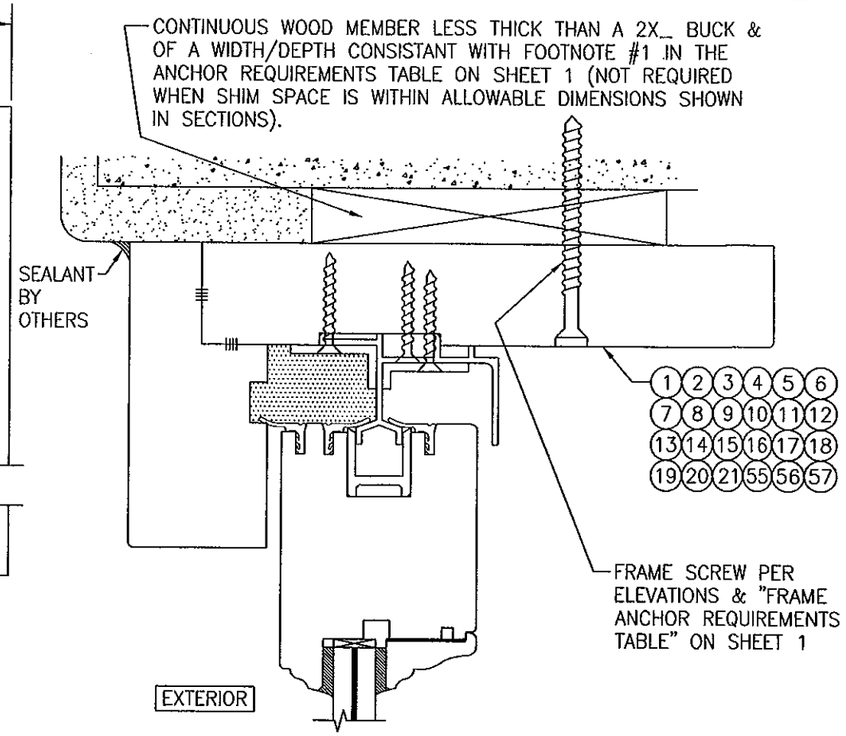

OPTIONAL DIRECT MOUNT DETAIL TO SUBSTRATE WITH SPACER

(1 PANEL DEEP HEAD SECTION SHOWN, ALL OTHER APPROVED HEAD, SILL & SIDE CONDITIONS ARE INSTALLED THE SAME)
(FOR DETAIL NOT SHOWN, SEE OTHER SECTIONS)

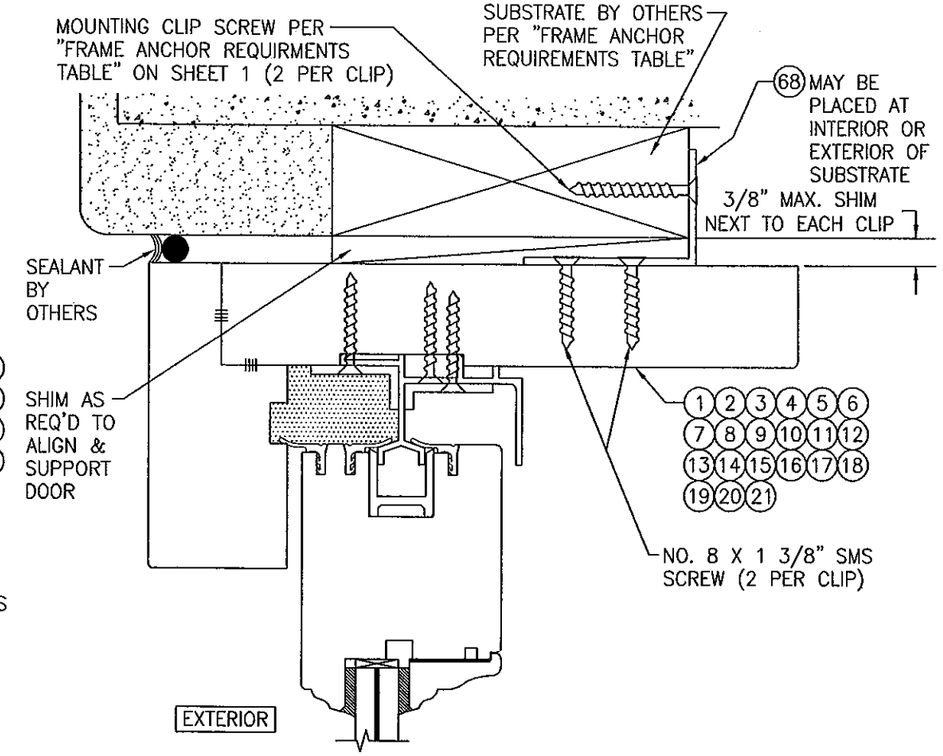

OPTIONAL MOUNTING CLIP DETAIL AT HEAD & SIDES

(1 PANEL DEEP HEAD SECTION SHOWN, ALL OTHER APPROVED HEAD & SIDE CONDITIONS ARE INSTALLED THE SAME)
(FOR DETAIL NOT SHOWN, SEE OTHER SECTIONS)

PRODUCT REVISED
as complying with the Florida Building Code
Acceptance No. 11-1024.14
Expiration Date 11/24/11
By Ishan
Official State / Product Control

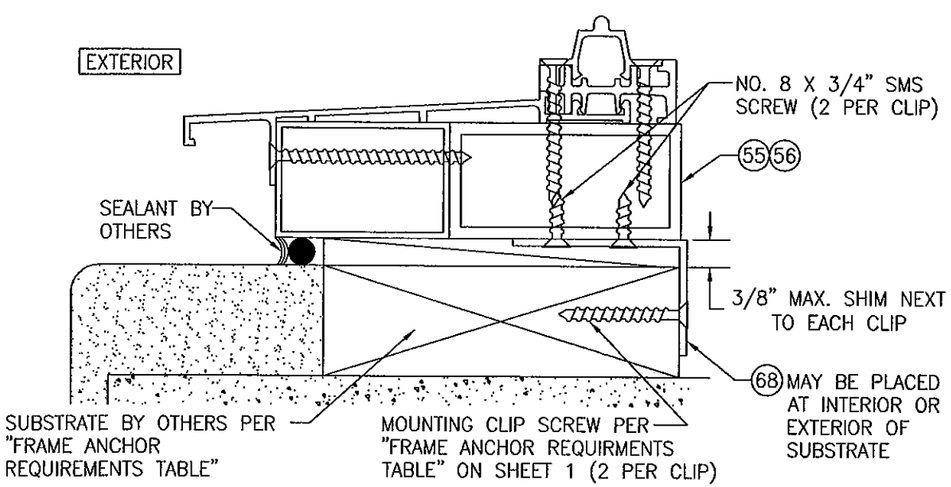

OPTIONAL MOUNTING CLIP DETAIL AT 1 & 2 PANEL DEEP SILLS

(1 PANEL DEEP SILL SECTION SHOWN, 2 PANEL DEEP SILL IS INSTALLED THE SAME)
(FOR DETAIL NOT SHOWN, SEE OTHER SECTIONS)

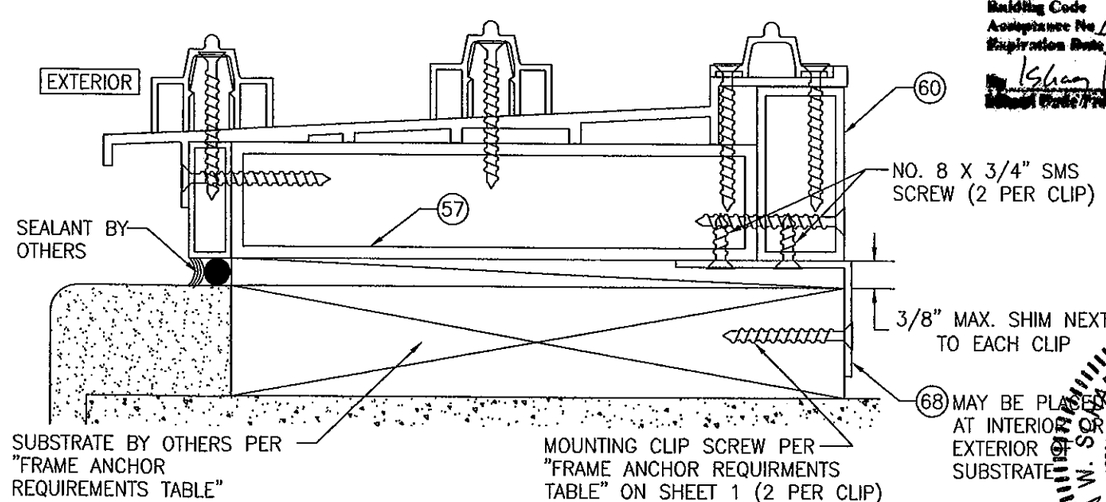

OPTIONAL MOUNTING CLIP DETAIL AT 3 & 4 PANEL DEEP SILLS

(3 PANEL DEEP SILL SECTION SHOWN, 4 PANEL DEEP SILL IS INSTALLED THE SAME)
(FOR DETAIL NOT SHOWN, SEE OTHER SECTIONS)

WARREN W. SCHAEFER LICENSE No. 44135 STATE OF FLORIDA PROFESSIONAL ENGINEER
OCT 19 2011

DRAWN BY: S.T.R.	CHECKED BY: W.W.S.
PLOT: 1=2	DATE: 3/18/05

NO.	REVISION DESCRIPTION	BY	DATE

DRAWING TITLE: LIFT & SLIDE WOOD SLIDING GLASS IMPACT DOORS

MANUFACTURER: PEETZ WINDOWS & DOORS
15951 S.W. 41ST STREET, SUITE 150
WESTON, FL 33331
954-659-3887

CONSULTANTS: W. W. SCHAEFER ENGINEERING & CONSULTING, P.A. (CA 6809)
7480 150TH COURT NORTH
PALM BEACH GARDENS, FL 33418
PHONE: 561-744-3424

WARREN W. SCHAEFER, P.E.
P.E. NO. 44135

DRAWING NO. 1321 REV. B
SHEET NO. 26 OF 31

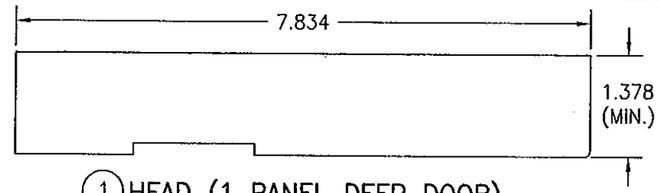

1 HEAD (1 PANEL DEEP DOOR)

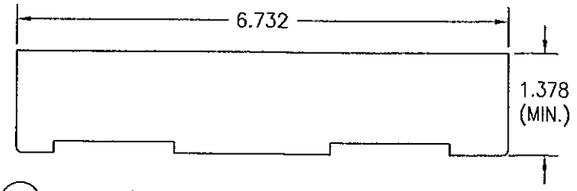

2 HEAD (2 PANEL DEEP OX OR XO DOOR)

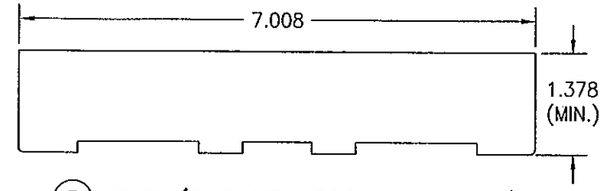

3 HEAD (2 PANEL DEEP XX DOOR)

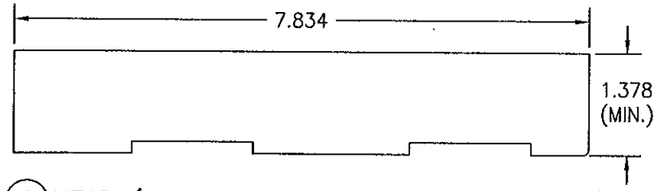

4 HEAD (2 PANEL DEEP DOOR WITH POCKET)

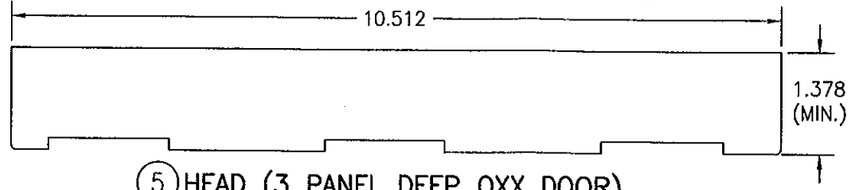

5 HEAD (3 PANEL DEEP OXX DOOR)

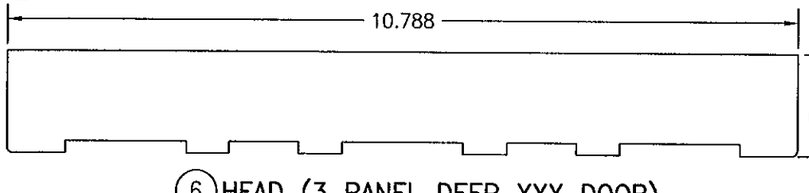

6 HEAD (3 PANEL DEEP XXX DOOR)

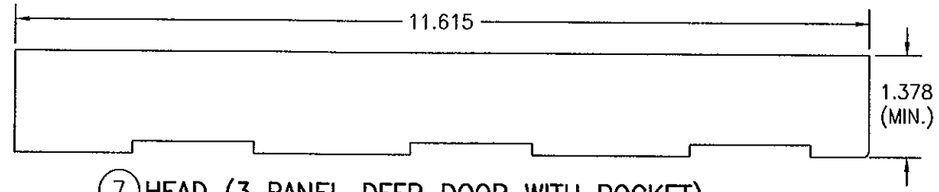

7 HEAD (3 PANEL DEEP DOOR WITH POCKET)

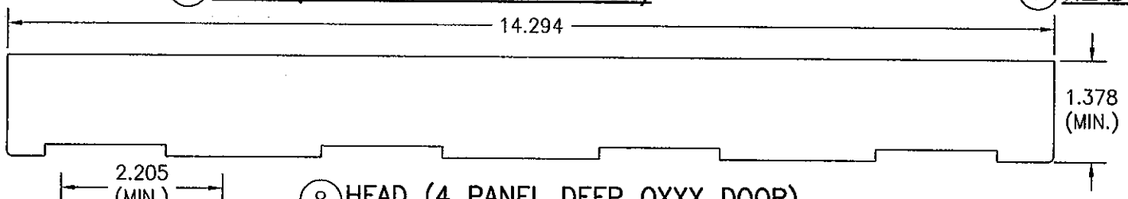

8 HEAD (4 PANEL DEEP OXXX DOOR)

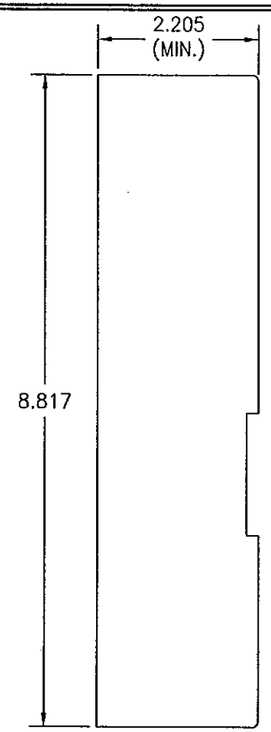

9 JAMB (1 PANEL DEEP DOOR)

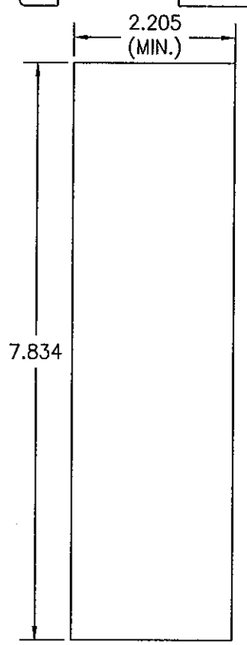

10 JAMB/POCKET SIDE (1 & 2 PANEL DEEP DOOR)

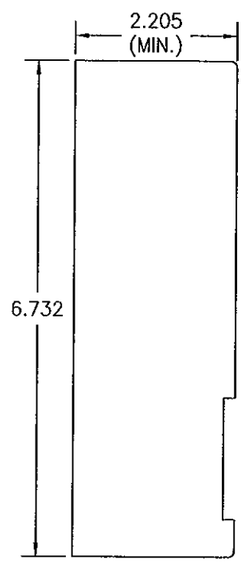

11 JAMB/FIXED SIDE (2 PANEL DEEP OX OR XO DOOR)

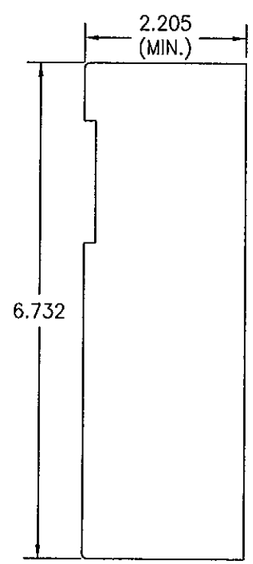

12 JAMB/ACTIVE SIDE (2 PANEL DEEP OX OR XO DOOR)

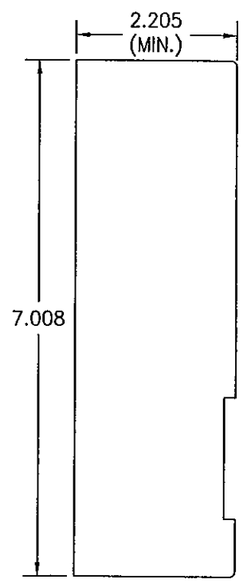

13 JAMB (2 PANEL DEEP XX DOOR)

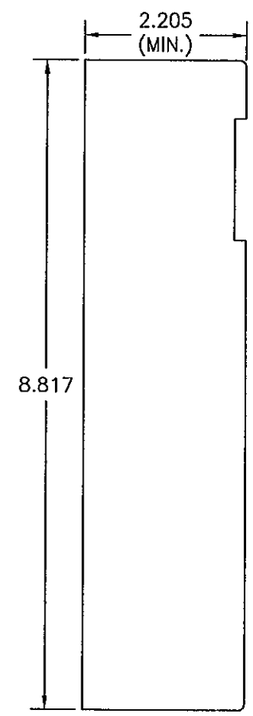

14 JAMB (2 PANEL DEEP XX DOOR WITH POCKET)

PRODUCT REVISED
in complying with the Florida Building Code
Acceptance No. 11-1024.14
Expiration Date 11/24/15
By Ishwar J. Chawla
Miami Dade Product Control

WARREN W. SCHAEFER LICENSE No. 44135 STATE OF FLORIDA PROFESSIONAL ENGINEER

DRAWN BY: S.T.R.	CHECKED BY: W.W.S.
PLOT: 1=2	DATE: 3/18/05

NO.	REVISION DESCRIPTION	BY	DATE

DRAWING TITLE
LIFT & SLIDE WOOD SLIDING GLASS IMPACT DOORS

MANUFACTURER
PEETZ WINDOWS & DOORS
15951 S.W. 41ST STREET, SUITE 150
WESTON, FL 33331
954-659-3887

CONSULTANTS
W. W. SCHAEFER ENGINEERING & CONSULTING, P.A. (CA 6809)
7480 150TH COURT NORTH
PALM BEACH GARDENS, FL 33418
PHONE: 561-744-3424

CERTIFICATION
OCT 19 2011
WARREN W. SCHAEFER, P.E.
P.E. NO. 44135

DRAWING NO. 1321
REV. B
SHEET NO. 27 OF 31

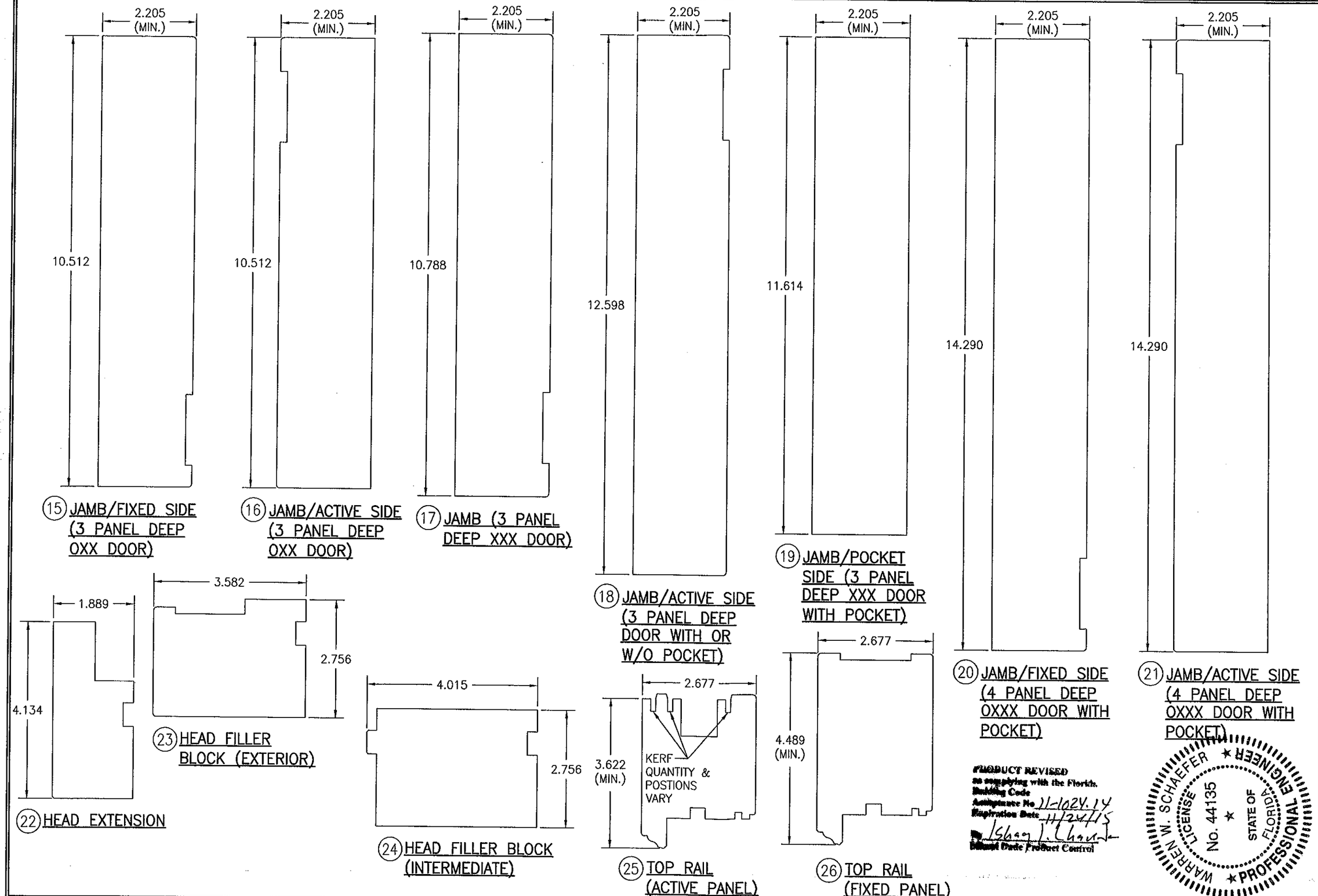

PRODUCT REVISED
as complying with the Florida Building Code
Acceptance No 11-1024.14
Expiration Date 11/24/15
By Ishay J. Chavez
Miami Dade Product Control

WARREN W. SCHAEFER ★ LICENSE No. 44135 ★ STATE OF FLORIDA ★ PROFESSIONAL ENGINEER

DRAWN BY: S.T.R.	CHECKED BY: W.W.S.
PLOT: 1=2	DATE: 3/18/05

NO.	REVISION DESCRIPTION	BY	DATE

DRAWING TITLE
LIFT & SLIDE WOOD SLIDING GLASS IMPACT DOORS

MANUFACTURER
PEETZ WINDOWS & DOORS
15951 S.W. 41ST STREET; SUITE 150
WESTON, FL 33331
954-659-3887

CONSULTANTS
W. W. SCHAEFER ENGINEERING & CONSULTING, P.A. (CA 6809)
7480 150TH COURT NORTH
PALM BEACH GARDENS, FL 33418
PHONE: 561-744-3424

CERTIFICATION
OCT 19 2011
WARREN W. SCHAEFER, P.E.
P.E. NO. 44135

DRAWING NO. 1321 REV. B
SHEET NO. 28 OF 31

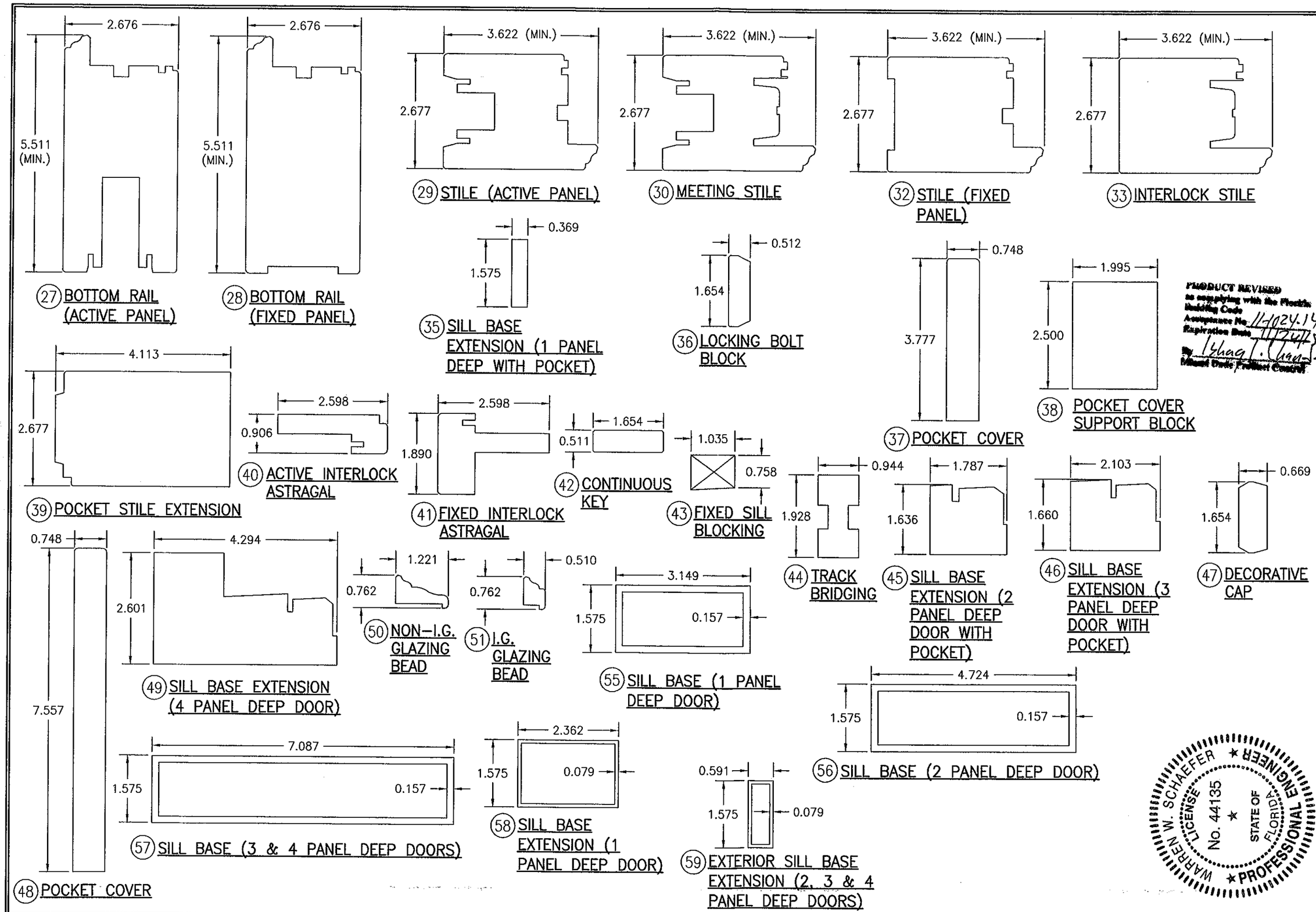

NO.	REVISION DESCRIPTION	BY	DATE

DRAWN BY: S.T.R.
CHECKED BY: W.W.S.
PLOT: 1=2
DATE: 3/18/05

DRAWING TITLE
LIFT & SLIDE WOOD SLIDING GLASS IMPACT DOORS

MANUFACTURER
PEETZ WINDOWS & DOORS
15951 S.W. 41ST STREET; SUITE 150
WESTON, FL 33331
954-659-3887

CONSULTANTS
W. W. SCHAEFER ENGINEERING & CONSULTING, P.A. (CA 6809)
7480 150TH COURT NORTH
PALM BEACH GARDENS, FL 33418
PHONE: 561-744-3424

CERTIFICATION
OCT 19 2011
WARREN W. SCHAEFER P.E.
P.E. NO. 44135

DRAWING NO. 1321
REV. B
SHEET NO. 29 OF 31

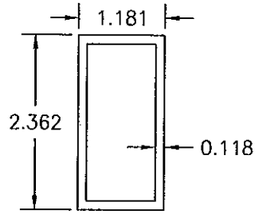

(60) INTERIOR SILL BASE EXTENSION (3 & 4 PANEL DEEP DOORS)

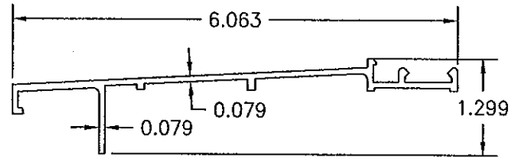

(61) THRESHOLD COVER (1 & 2 PANEL DEEP DOORS)

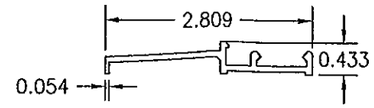

(62) THRESHOLD COVER (1 PANEL DEEP DOORS WITH POCKET)

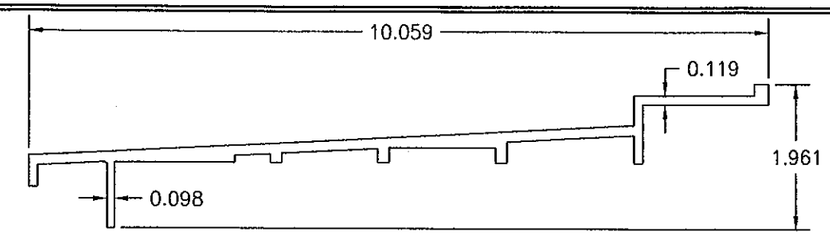

(63) THRESHOLD COVER (3 & 4 PANEL DEEP DOORS)

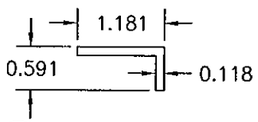

(64) GUIDING RAIL SUPPORT BRACKET

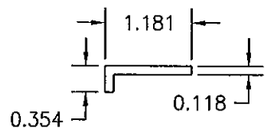

(65) GUIDING RAIL SUPPORT BRACKET

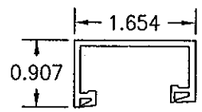

(66) SILL TRACK (FIXED PANEL)

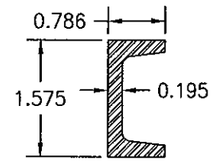

(67) STILE REINFORCEMENT

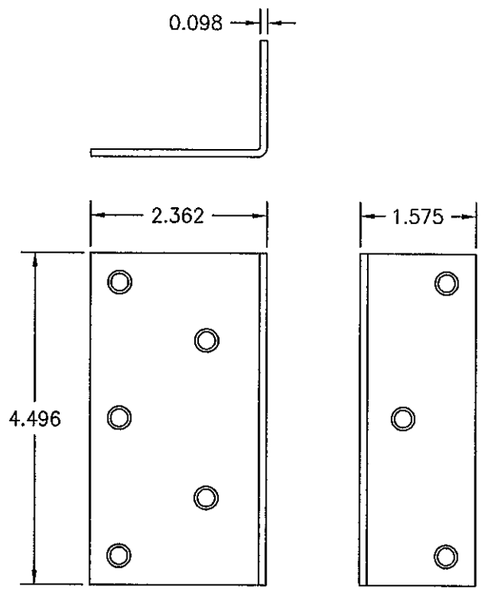

(68) MOUNTING CLIP

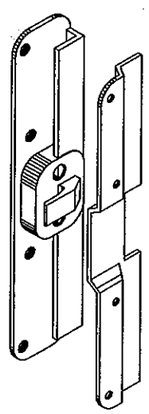

(84) INTERLOCK

PRODUCT REVISED
as complying with the Florida
Building Code
Acceptance No. 11-1024.14
Expiration Date 11/24/15
By Ishmael Duke, Product Control

WARREN W. SCHAEFER ★ ENGINEER ★ PROFESSIONAL ENGINEER
LICENSE No. 44135
STATE OF FLORIDA

DRAWN BY: S.T.R.	CHECKED BY: W.W.S.
PLOT: 1=2	DATE: 3/18/05

NO.	REVISION DESCRIPTION	BY	DATE

DRAWING TITLE
LIFT & SLIDE WOOD SLIDING GLASS IMPACT DOORS

MANUFACTURER
PEETZ WINDOWS & DOORS
15951 S.W. 41ST STREET; SUITE 150
WESTON, FL 33331
954-659-3887

CONSULTANTS
W. W. SCHAEFER ENGINEERING & CONSULTING, P.A. (CA 6809)
7480 150TH COURT NORTH
PALM BEACH GARDENS, FL 33418
PHONE: 561-744-3424

CERTIFICATION
OCT 19 2011
WARREN W. SCHAEFER, P.E.
P.E. NO. 44135

DRAWING NO. 1321
REV. B
SHEET NO. 30 OF 31

ITEM #	ITEM DESCRIPTION	MANUFACTURER/NOTES
	PARTS	
1	HEAD (1 PANEL DEEP DOOR)	MAHOGANY
2	HEAD (2 PANEL DEEP OX OR XO DOOR)	MAHOGANY
3	HEAD (2 PANEL DEEP XX DOOR)	MAHOGANY
4	HEAD (2 PANEL DEEP DOOR WITH POCKET)	MAHOGANY
5	HEAD (3 PANEL DEEP OXX DOOR)	MAHOGANY
6	HEAD (2 PANEL DEEP XXX DOOR)	MAHOGANY
7	HEAD (2 PANEL DEEP DOOR WITH POCKET)	MAHOGANY
8	HEAD (4 PANEL DEEP OXXX DOOR)	MAHOGANY
9	JAMB (1 PANEL DEEP DOOR)	MAHOGANY
10	JAMB/POCKET SIDE (1 & 2 PANEL DEEP DOOR)	MAHOGANY
11	JAMB/FIXED SIDE (2 PANEL DEEP OX OR XO DOOR)	MAHOGANY
12	JAMB/ACTIVE SIDE (2 PANEL DEEP OX OR XO DOOR)	MAHOGANY
13	JAMB (2 PANEL DEEP XX DOOR)	MAHOGANY
14	JAMB (2 PANEL DEEP XX DOOR WITH POCKET)	MAHOGANY
15	JAMB/FIXED SIDE (3 PANEL DEEP OXX DOOR)	MAHOGANY
16	JAMB/ACTIVE SIDE (3 PANEL DEEP OXX DOOR)	MAHOGANY
17	JAMB (3 PANEL DEEP XXX DOOR)	MAHOGANY
18	JAMB/ACTIVE SIDE (3 PANEL DEEP DOOR WITH OR W/O POCKET)	MAHOGANY
19	JAMB/POCKET SIDE (3 PANEL DEEP XXX DOOR WITH POCKET)	MAHOGANY
20	JAMB/FIXED SIDE (4 PANEL DEEP OXXX DOOR WITH POCKET)	MAHOGANY
21	JAMB/ACTIVE SIDE (4 PANEL DEEP OXXX DOOR WITH POCKET)	MAHOGANY
22	HEAD EXTENSION	MAHOGANY
23	HEAD FILLER BLOCK (EXTERIOR)	MAHOGANY
24	HEAD FILLER BLOCK (INTERMEDIATE)	MAHOGANY
25	TOP RAIL (ACTIVE PANEL)	MAHOGANY
26	TOP RAIL (FIXED PANEL)	MAHOGANY
27	BOTTOM RAIL (ACTIVE PANEL)	MAHOGANY
28	BOTTOM RAIL (FIXED PANEL)	MAHOGANY
29	STILE (ACTIVE PANEL)	MAHOGANY
30	MEETING STILE (ACTIVE PANEL)	MAHOGANY
32	STILE (FIXED PANEL)	MAHOGANY
33	INTERLOCK STILE	MAHOGANY
34	MIN. 1" THICK POCKET COVER (OVERALL SIZE PER POCKET REQUIREMENTS)	PLYWOOD
35	SILL BASE EXTENSION (1 PANEL DEEP WITH POCKET)	MAHOGANY
36	LOCKING BOLT BLOCK	MAHOGANY
37	POCKET COVER	MAHOGANY
38	POCKET COVER SUPPORT BLOCK	MAHOGANY
39	POCKET STILE EXTENSION	MAHOGANY
40	ACTIVE INTERLOCK ASTRAGAL	MAHOGANY
41	FIXED INTERLOCK ASTRAGAL	MAHOGANY
42	CONTINUOUS KEY	MAHOGANY
43	FIXED SILL BLOCKING	MAHOGANY
44	TRACK BRIDGING	MAHOGANY
45	SILL BASE EXTENSION (2 PANEL DEEP DOOR WITH POCKET)	MAHOGANY
46	SILL BASE EXTENSION (3 PANEL DEEP DOOR WITH POCKET)	MAHOGANY
47	DECORATIVE CAP	MAHOGANY
48	POCKET COVER	MAHOGANY
49	SILL BASE EXTENSION (4 PANEL DEEP DOOR)	MAHOGANY
50	NON-I.G. GLAZING BEAD	MAHOGANY
51	I.G. GLAZING BEAD	MAHOGANY
55	SILL BASE (1 PANEL DEEP DOOR)	6063-T5 ALUMINUM
56	SILL BASE (2 PANEL DEEP DOOR)	6063-T5 ALUMINUM
57	SILL BASE (3 & 4 PANEL DEEP DOORS)	6063-T5 ALUMINUM

ITEM #	ITEM DESCRIPTION	MANUFACTURER/NOTES
	PARTS	
58	SILL BASE EXTENSION (1 PANEL DEEP DOOR)	6063-T5 ALUMINUM
59	EXTERIOR SILL BASE EXTENSION (2, 3 & 4 PANEL DEEP DOORS)	6063-T5 ALUMINUM
60	INTERIOR SILL BASE EXTENSION (3 & 4 PANEL DEEP DOORS)	6063-T5 ALUMINUM
61	THRESHOLD COVER (1 & 2 PANEL DEEP DOORS)	BRONZE OR 6063-T5 ALUMINUM
62	THRESHOLD COVER (1 PANEL DEEP DOORS WITH POCKET)	BRONZE OR 6063-T5 ALUMINUM
63	THRESHOLD COVER (3 & 4 PANEL DEEP DOORS)	BRONZE OR 6063-T5 ALUMINUM
64	GUIDING RAIL SUPPORT BRACKET	6063-T5 ALUMINUM
65	GUIDING RAIL SUPPORT BRACKET	6063-T5 ALUMINUM
66	SILL TRACK (FIXED PANEL)	PVC
67	STILE REINFORCEMENT	GALVANIZED 34 KSI STEEL
68	MOUNTING CLIP	GALVANIZED 34 KSI STEEL
	HARDWARE	
72	ALUMINUM ROLLER TRACK	SUPPLIED WITH GU OR FFI HARDWARE
73	ALUMINUM ROLLER TRACK	SUPPLIED WITH GU OR FFI HARDWARE
74	ALUMINUM ROLLER TRACK	SUPPLIED WITH GU OR FFI HARDWARE
75	2" LONG ROLLER TRACK CONNECTOR	WITHIN 3" OF ENDS & MAX. 12" O.C.
76	MALE GUIDING RAIL	GU #740
77	INTERMEDIATE GUIDING RAIL	GU #741
78	LIFT AND SLIDE DOOR HARDWARE	FFI #255JH OR GU #934
79	LIFT AND SLIDE DOOR HARDWARE	FFI #255JH OR GU #934
80	HANDLE	AS REQUIRED TO OPERATE LOCK/LIFT SLIDE SYSTEM
81	BUMPER	GU OR FFI
82	STOPPER	GU OR FFI
83	LOCKING BOLT	GU OR FFI
84	INTERLOCK	GU OR FFI
	SEALS & SEALANTS	
88	SASH GASKET	GU OR FFI
89	SASH GASKET	GU OR FFI
90	SOFT RUBBER SEALING BRIDGE	GU/FFI (SCREWED TO FRAME W/#6X7/8 SMS)
91	SOFT RUBBER SEALING BRIDGE	GU/FFI (SCREWED TO FRAME W/#6X7/8 SMS)
92	SOFT RUBBER SEALING PIECE	GU/FFI (GLUED ONTO RUNNING RAIL)
93	SOFT RUBBER SEALING PIECE	GU/FFI (GLUED ONTO RUNNING RAIL)
94	3/8" X 3/16" PRECOMPRESSED TAPE	AS REQ'D
	FASTENERS	
97	NO. 8 X 1 3/8" S.S. WOOD SCREW	WITHIN 4" OF CORNERS & 12" MAX. O.C.
98	NO. 8 X 1 3/8" S.S. WOOD SCREW	WITHIN 2" OF CORNERS & 8" MAX. O.C.
99	NO. 8 X 2" S.S. SMS SCREW	WITHIN 4" OF CORNERS & 12" MAX. O.C.
100	NO. 12 X 2 3/4" S.S. WOOD SCREW	WITHIN 4" OF CORNERS & 6" MAX. O.C.
101	NO. 12 S.S. SMS SCREW (LENGTH AS REQ'D TO PENETRATE ALUMINUM SILL BASE)	WITHIN 4" OF CORNERS & 6" MAX. O.C.
102	NO. 8 X 1 3/4" S.S. SCREW	WITHIN 6" OF CORNERS & 17" MAX. O.C.
103	NO. 14 X 3 3/4" WOOD SCREW	WITHIN 4" OF CORNERS & 14" MAX. O.C.
104	NO. 14 X 5" WOOD SCREW	WITHIN 4" OF CORNERS & 14" MAX. O.C.
105	NO. 14 X 4 3/4" WOOD SCREW	WITHIN 5 1/2" OF CORNERS & 10" MAX. O.C.
106	18 GA. X 1 1/4" GALV. CURVED NAIL	WITHIN 10" OF CORNERS & 20" MAX. O.C.
107	3/16" X 1 9/16 SELF TAP/DRILLING SCREW	2 PER TRACK CONNECTOR
108	NO. 8 X 2 3/4" S.S. SMS SCREW	WITHIN 4" OF CORNERS & 12" MAX. O.C.
109	NO. 8 X 1 3/4" WOOD SCREW	WITHIN 6" OF ENDS & 24" MAX. O.C.

NOTE: WOOD USED IN TESTING WAS MAHOGANY WITH A SPECIFIC GRAVITY OF G = 0.46 AND A MODULUS OF ELASTICITY OF E = 1,500,000 PSI. OTHER WOOD SPECIES APPLICABLE FOR USE WITH THIS PRODUCT ARE THOSE WITH A SPECIFIC GRAVITY OF 0.46 AND MODULUS OF ELASTICITY OF 1,500,000 PSI OR GREATER. ALL WOOD IS MINIMUM GRADE 2 MILLED BY PEETZ WINDOWS & DOORS TO SELECT.

PRODUCT REVISED
as complying with the Florida Building Code
Acceptance No. 11-1024.14
Expiration Date 11/24/2015
By Shang I. Chang
Miami-Dade Product Control

WARREN W. SCHAEFER LICENSE No. 44135 STATE OF FLORIDA PROFESSIONAL ENGINEER

NO.	REVISION DESCRIPTION	BY	DATE

DRAWN BY: S.T.R.
CHECKED BY: W.W.S.
PLOT: 1=2
DATE: 3/18/05

DRAWING TITLE: LIFT & SLIDE WOOD SLIDING GLASS IMPACT DOORS

MANUFACTURER: PEETZ WINDOWS & DOORS
15951 S.W. 41ST STREET; SUITE 150
WESTON, FL 33331
954-659-3887

CONSULTANTS: W. W. SCHAEFER ENGINEERING & CONSULTING, P.A. (CA 6809)
7480 150TH COURT NORTH
PALM BEACH GARDENS, FL 33418
PHONE: 561-744-3424

CERTIFICATION
OCT 19 2011
WARREN W. SCHAEFER, P.E.
P.E. NO. 44135

DRAWING NO. 1321
REV. B
SHEET NO. 31 OF 31