MIAMI-DADE COUNTY
DEPARTMENT OF PERMITTING, ENVIRONMENT, AND REGULATORY AFFAIRS (PERA)
BOARD AND CODE ADMINISTRATION DIVISION

MIAMI-DADE COUNTY
PRODUCT CONTROL SECTION
11805 SW 26 Street, Room 208
Miami, Florida 33175-2474
T (786) 315-2590 F (786) 315-2599
www.miamidade.gov/pera/

NOTICE OF ACCEPTANCE (NOA)

CGI Windows & Doors, Inc.
10100 N. W. 25th Street
Miami, Fl. 33172

SCOPE:

This NOA is being issued under the applicable rules and regulations governing the use of construction materials. The documentation submitted has been reviewed and accepted by Miami-Dade County PERA -Product Control Section to be used in Miami Dade County and other areas where allowed by the Authority Having Jurisdiction (AHJ).

This NOA shall not be valid after the expiration date stated below. The Miami-Dade County Product Control Section (In Miami Dade County) and/or the AHJ (in areas other than Miami Dade County) reserve the right to have this product or material tested for quality assurance purposes. If this product or material fails to perform in the accepted manner, the manufacturer will incur the expense of such testing and the AHJ may immediately revoke, modify, or suspend the use of such product or material within their jurisdiction. PERA reserves the right to revoke this acceptance, if it is determined by Miami-Dade County Product Control Section that this product or material fails to meet the requirements of the applicable building code.
This product is approved as described herein, and has been designed to comply with the Florida Building Code, including the High Velocity Hurricane Zone.

DESCRIPTION: Series "450" Outswing Aluminum Doors w/wo Sidelites - Impact

APPROVAL DOCUMENT: Drawing No.**W98-01**, titled "Series 450 Outswing Doors & Sidelites", sheets 1, 1.1, 1.2 1.3, 1.4, 2, 2.1, 2.2, 2.3, 3, 4, 5, 6, 7 and 7.1 of 7, prepared by manufacturer, dated 10/20/97 and last revised on May 10, 2012, signed and sealed by Javad Ahmad, P.E., bearing the Miami-Dade County Product Control Revision stamp with the Notice of Acceptance number and expiration date by the Miami-Dade County Product Control Section.

MISSILE IMPACT RATING: Large and Small Missile Impact

Limitations:

1. See Design Pressure ratings in sheets 1.1, 1.3, 1.4 , 5, 6 and 7 for unit sizes Vs lock options, mullion type, sidelites (widestile), glass types and anchors.
2. For mulled units lower design pressure of doors or mullion shall control for entire assembly.
3. See applicable threshold water ratings and limitation of glass type A1, in sheet 7.
4. 7/16" and 1" composite panels are limited to partial condition, not to exceed=1098 in^2 (7.625 ft^2) total area.

LABELING: Each unit shall bear a permanent label with the manufacturer's name or logo, city, state and series and following statement: "Miami-Dade County Product Control Approved", noted herein.

RENEWAL of this NOA shall be considered after a renewal application has been filed and there has been no change in the applicable building code negatively affecting the performance of this product.

TERMINATION of this NOA will occur after the expiration date or if there has been a revision or change in the materials, use, and/or manufacture of the product or process. Misuse of this NOA as an endorsement of any product, for sales, advertising or any other purposes shall automatically terminate this NOA. Failure to comply with any section of this NOA shall be cause for termination and removal of NOA.

ADVERTISEMENT: The NOA number preceded by the words Miami-Dade County, Florida, and followed by the expiration date may be displayed in advertising literature. If any portion of the NOA is displayed, then it shall be done in its entirety.

INSPECTION: A copy of this entire NOA shall be provided to the user by the manufacturer or its distributors and shall be available for inspection at the job site at the request of the Building Official.
This NOA **revises NOA # 11-0912.12** and consists of this page 1 and evidence pages E-1 & E-2, as well as approval document mentioned above.
The submitted documentation was reviewed by **Ishaq I. Chanda, P.E.**

MIAMI-DADE COUNTY APPROVED
5/11/12

NOTICE OF ACCEPTANCE: EVIDENCE SUBMITTED

A. DRAWINGS

1. Manufacturer's die drawings and sections (transferred from file # **11-0912.12**)
2. Drawing No.**W98-01**, titled "Series 450 Outswing Doors & Sidelites", sheets 1, 1.1, 1.2, 1.3, 1.4, 2, 2.1, 2.2, 2.3, 3, 4, 5, 6, 7 and 7.1 of 7, prepared by manufacturer, dated 10/20/97 and last revised on May 10, 2012, signed and sealed by Javad Ahmad, P.E.

B. TESTS

1. Test reports on: 1) Air Infiltration Test, per FBC, TAS 202-94
   2) Uniform Static Air Pressure Test, Loading per FBC TAS 202-94
   3) Water Resistance Test, per FBC, TAS 202-94
   4) Large Missile Impact Test per FBC, TAS 201-94
   5) Cyclic Wind Pressure Loading per FBC, TAS 203-94
   6) Forced Entry Test, per FBC 2411 3.2.1, TAS 202-94

   Along with manufacturer's parts and section drawing marked-up drawings of aluminum out swing / Inswing door w/wo sidelites, by Hurricane Testing Laboratory, Inc., Test Report No. **HTL-0080-0304-11** dated 11/28/2011 and **HTL-0080-0902-11**, signed and sealed by Vinu J. Abraham, P.E.

   Note: This test report has been revised by addendum letters, issued by Architectural Testing (Former Hurricane Testing Lab), dated 01/20/12 and 04/03/12, both signed and sealed by Vinu J. Abraham, P.E.

   Along with manufacturer's parts and section drawing marked-up drawings of double aluminum outswing doors, issued by Architectural Testing, Test Report No(s) **B-5234.02-450-18** dated 12/19/2011, signed and sealed by Vinu J. Abraham, P.E.

2. Test reports on: 1) Air Infiltration Test, per FBC, TAS 202-94
   2) Uniform Static Air Pressure Test, Loading per FBC TAS 202-94
   3) Water Resistance Test, per FBC, TAS 202-94
   4) Large Missile Impact Test per FBC, TAS 201-94
   5) Cyclic Wind Pressure Loading per FBC, TAS 203-94
   6) Forced Entry Test, per FBC 2411 3.2.1, TAS 202-94.

   Along with manufacturer's parts and section drawing marked-up drawings of aluminum In/out swing door w/sidelites, by Hurricane Testing Laboratory, Inc., Test Report No. **HTL-97055 (0080-912-97)** dated 09/23/97 thru 02/27/98 for specimen #1, 2, 3, 4 tested per PA202-94, specimen #4, 5A, 5B, 5C tested per PA201-94 & PA203-94, signed and sealed by Timothy S. Marshall, P.E.

   Along with manufacturer's parts and section drawing marked-up drawings of aluminum out swing door w/sidelites, by Hurricane Testing Laboratory, Inc., Test Report No. **HTL-01071 (0080-0402-02)** dated 04/01/2002 tested per PA201-94 & PA203-94, signed and sealed by Vinu J. Abraham, P.E. (submitted in file # **09-0723.04**). Original tests conducted per SFBC, PA 201, 202 &203-94 now known as FBC, TAS 201, 202 & 203-94.

Ishaq I. Chanda

Ishaq I. Chanda, P.E.
Product Control Examiner
NOA No 11-1025.02
Expiration Date: November 09, 2016
Approval Date: May 17, 2012

NOTICE OF ACCEPTANCE: EVIDENCE SUBMITTED

C. CALCULATIONS

1. Anchor verification calculations and structural analysis, complying with FBC-2010, prepared by Al Farooq Corporation, dated 09/09/11 and last revised on APR 24, 2012, signed and sealed by Javad Ahmad, P.E.
2. Glazing complies w/ ASTME-1300-02 & -04

D. QUALITY ASSURANCE

1. Miami Dade Department of Permitting, Environment, and Regulatory Affairs (PERA).

E. MATERIAL CERTIFICATIONS

1. Notice of Acceptance No. **11-0624.02** issued to E.I. DuPont DeNemours & Co., Inc. for their "**DuPont Sentry Glass ® Interlayer**", expiring on 01/14/17.
2. Notice of Acceptance No. **08-1224.04** issued to Solutia Inc. for "Saflex composite glass w/ PET interlayer", expiring on 12/11/13.
3. Notice of Acceptance No. **11-0325.05** issued to Solutia Inc. for "Saflex color & clear interlayer", expiring on 05/21/16.

F. STATEMENTS

1. Statement letter of conformance to FBC 2010 and letter of no financial interest, prepared by Al Farooq Corporation, dated 05/11/12, signed and sealed by Javad Ahmad, P.E.
2. Lab compliance and addendum letters, as part of the above referenced test reports.

G. OTHER

1. This NOA **revises** NOA # **11-0912.12**, expiring on 11/09/16.
2. Hardware cut sheets verified and marked-up by the Architectural Testing (former Hurricane Testing lab).
3. Test proposal # **10-0940**, dated 11/17/10 approved by BNC.

Ishaq I. Chanda

Ishaq I. Chanda, P.E.
Product Control Examiner
NOA No 11-1025.02
Expiration Date: November 09, 2016
Approval Date: May 17, 2012

TYPICAL ELEVATIONS

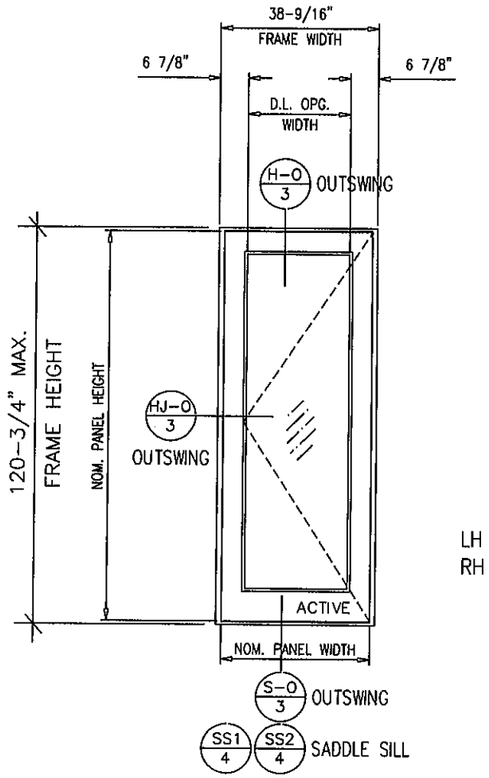

LH CONFIGURATIONS SHOWN
RH SIMILAR

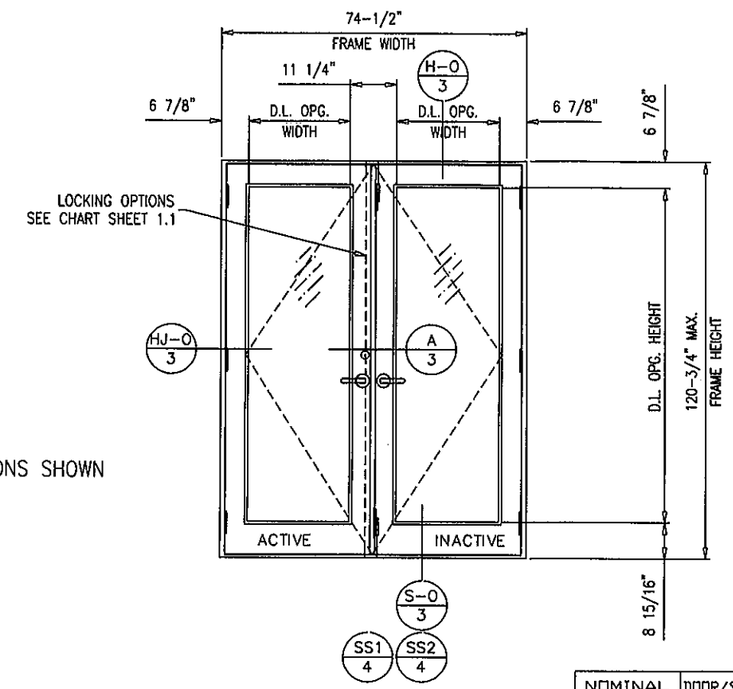

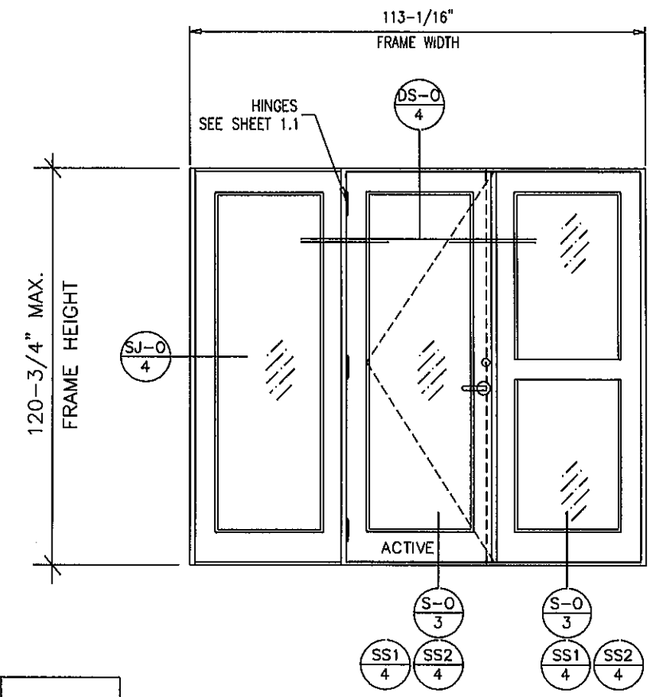

NOMINAL PANEL WIDTH	DOOR/SIDELITE PANEL WIDTH	D.L. OPG. WIDTH
2/0	23-3/4"	12-7/8"
2/6	29-3/4"	18-7/8"
3/0	35-3/4"	24 7/8"
3/6	41-3/4"	30-7/8"

NOMINAL PANEL HEIGHT	DOOR/SIDELITE PANEL HEIGHT	D.L. OPG. HEIGHT
6/8	78-7/8"	66-1/2"
7/0	82-7/8"	70-1/2"
7/6	88-7/8"	76-1/2"
8/0	94-7/8"	82-1/2"
8/6	100-7/8"	88-1/2"
9/0	106-7/8"	94-1/2"
9/6	112-7/8"	100-1/2"
10/0	118-7/8"	106-1/2"

FRAME HEIGHT = PANEL HEIGHT + 1-7/8" (STD. THRESHOLD)
FRAME HEIGHT = PANEL HEIGHT + 1-5/8" (ADA THRESHOLD)
FRAME WIDTH = PANEL WIDTH + 2-3/4"

PRODUCT REVISED
as complying with the Florida Building Code
Acceptance No 11-1025.02
Expiration Date NOV09, 2016
By Ishaq I. Chanda
Miami Dade Product Control

LEGEND

___ -O - OUTSWING DOOR DETAIL

☐ - ITEM DESCRIPTION (see sheet 2 of 7)

STEPS TO USE CHARTS
SEE SHEETS 6 & 7.

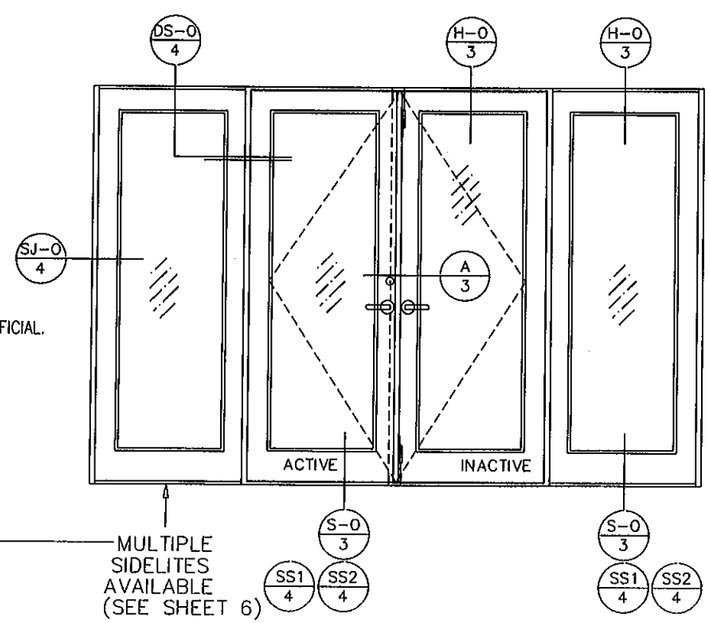

NOTE:
EGRESS REQUIREMENTS TO BE REVIEWED BY BUILDING OFFICIAL.

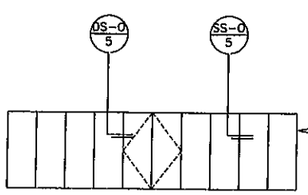

revisions:

E	10.16.06	REV. PER BCCO COMMENTS
F	07.10.09	UPDATED FOR 2007 FBC
H	10.25.11	REV. PER BNC COMMENTS
I	04.23.12	REV. PER PERA COMMENTS

DWG. NO.: W98-01

Engr: JAVAD AHMAD
CIVIL
FLA. PE # 70592
C.A.N. 31338
MAY 10 2012

CGI WINDOWS & DOORS
10100 northwest 25 street miami, florida 33172

product : Series 450 Outswing Doors & Sidelites

date : 10-20-97 | sheet 1 of 7

TYPICAL ELEVATIONS

	10A		10AA		10B		10C & 10CC		10D & 10E		10 F	
DOOR HEIGHT	EXT.(+)	INT.(−)	EXT.(+)	INT.(−)	EXT.(+)	INT.(−)	EXT.(+)	INT.(−)	EXT.(+)	INT.(−)	EXT.(+)	INT.(−)
84"	90.0	90.0	100.0	110.0	100.0	110.0	65.0	65.0	80.0	80.0	100.0	110.0
96-3/4"	90.0	90.0	100.0	110.0	100.0	110.0	65.0	65.0	70.0	70.0	90.0	90.0
108-3/4"	–	–	100.0	110.0	100.0	110.0	–	–	–	–	90.0	90.0
120-3/4"	–	–	70.0	70.0	70.0	70.0	–	–	–	–	70.0	70.0

10A : COPPER CREEK W/ CGI 3 POINT
10AA : BALDWIN W/ CGI 3 POINT
10B : REGENT COMMERCIAL 3 POINT
10C : BALDWIN SINGLE POINT LOCK
10CC : COPPER CREEK SINGLE POINT LOCK
10D : DOR-O-MATIC SERIES 1690
10E : JACKSON SERIES 2085/2065
10F : SURFACE MOUNTED LOCK

LH CONFIGURATIONS SHOWN
RH SIMILAR (SEE SHEET 1 FOR SIZES)

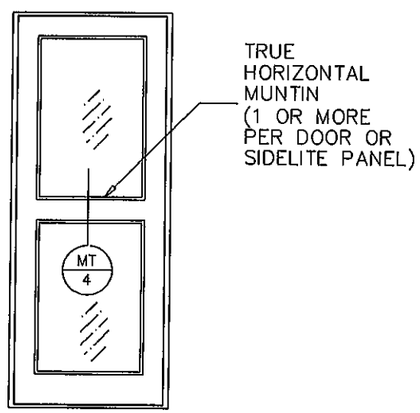

OPTIONAL TRUE MUNTINS
DOOR OR SIDELITE

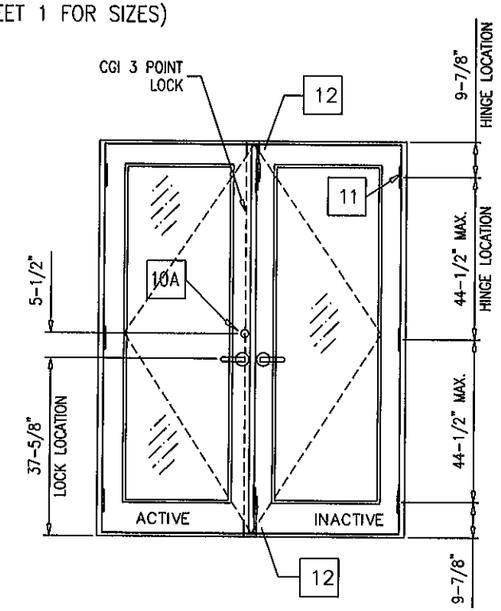

RESIDENTIAL HARDWARE

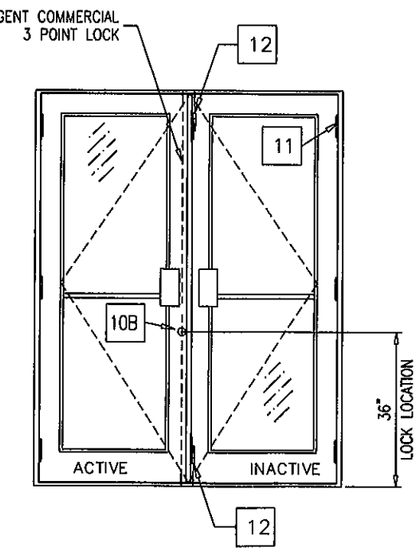

COMMERCIAL HARDWARE

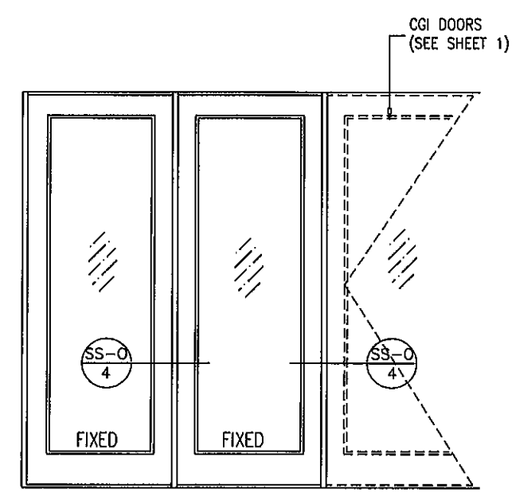

LEGEND

___ -O - OUTSWING DOOR DETAIL

☐ - ITEM DESCRIPTION
(see sheet 2 of 7)

PRODUCT REVISED
to complying with the Florida
Building Code
Acceptance No. 11-1025.02
Expiration Date 11/9/16
By Ichas L. Chandler
Miami Dade Product Control

HINGE LOCATIONS		
MAX. DOOR HEIGHT	NO. REQD.	MAX. SPACING
UPTO 90-3/4"	3	35 1/2"
ABOVE 90-3/4" UPTO 120"	4	44 1/2"

DOORS WITH 3 HINGES LIMITED TO 100 PSF

FRAME HEIGHT = PANEL HEIGHT + 1-7/8" (STD. THRESHOLD)
FRAME HEIGHT = PANEL HEIGHT + 1-5/8" (ADA THRESHOLD)
FRAME WIDTH = PANEL WIDTH + 2-3/4"

HARDWARE DESCRIPTION

E	10.16.06	REV. PER BCCO COMMENTS
F	07.10.09	UPDATED FOR 2007 FBC
G	06.29.11	GENERAL REVISION
H	10.25.11	REV. PER BNC COMMENTS
I	04.23.12	REV. PER PERA COMMENTS

Engr: JAVAD AHMAD
CIVIL
FLA. PE # 70592
C.A.N. 3538

MAY 10 2012

DWG. NO.: W98-01

CGI
WINDOWS & DOORS
10100 northwest 25 street miami, florida 33172

product : Series 450 Outswing Doors & Sidelites

date : 10-20-97 | sheet 1.1 of 7

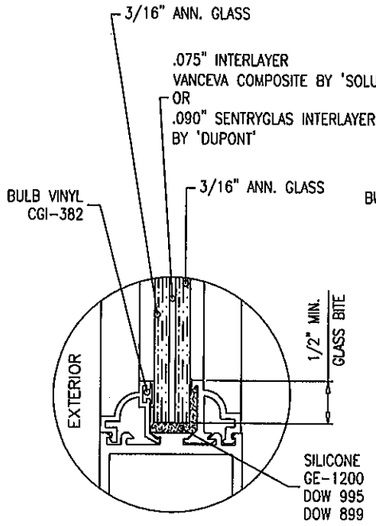

GLASS TYPE 'A'

7/16" OVERALL LAM. GLASS

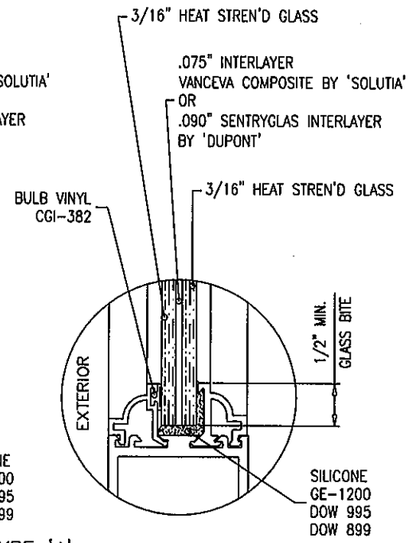

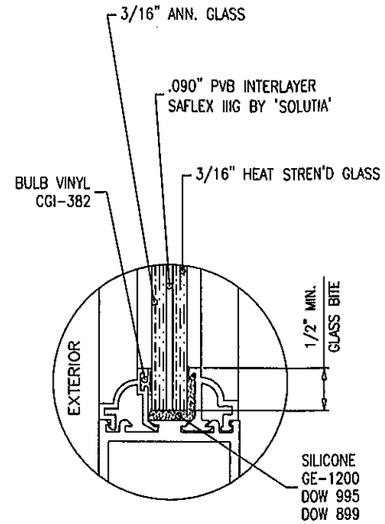

GLASS TYPE 'B'

7/16" OVERALL LAM. GLASS

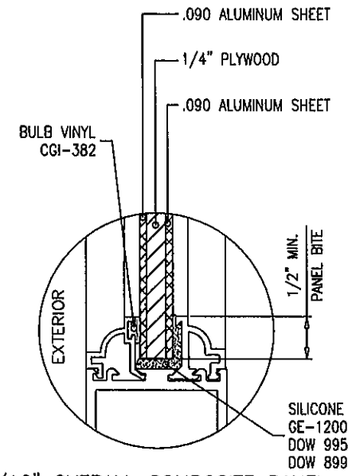

7/16" OVERALL COMPOSITE PANEL

GLAZING STOP OPTIONS

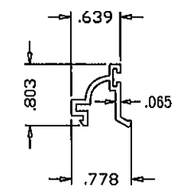

CGI-375

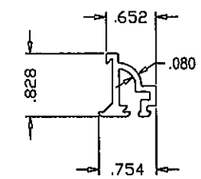

CGI-504

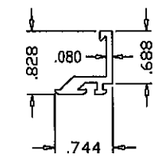

CGI-515

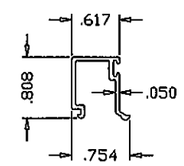

CGI-396

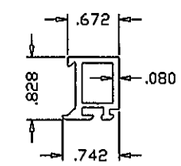

CGI-519

DOORS AND SIDELITES CAN BE GLAZED USING SQUARE OR OGEE GLAZING BEADS/ADAPTERS

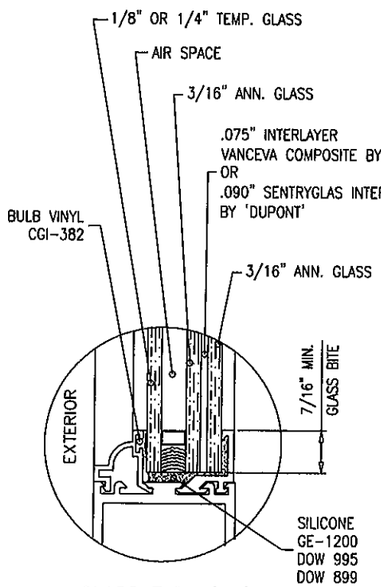

GLASS TYPE 'A1'

1" OVERALL INSUL. LAM. GLASS

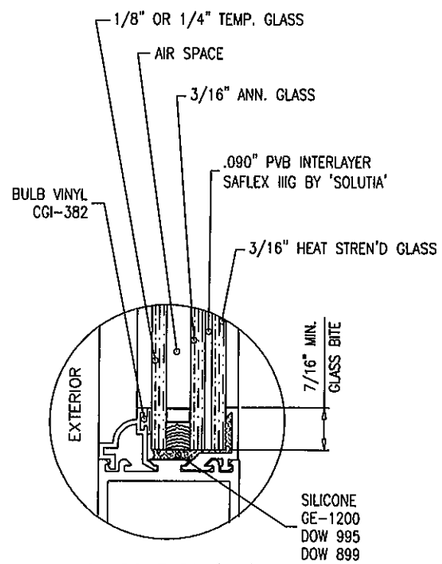

GLASS TYPE 'B1'

1" OVERALL INSUL. LAM. GLASS

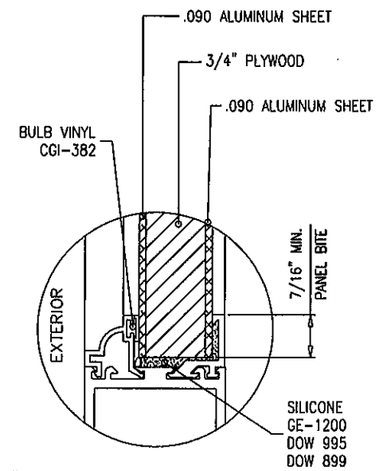

1" OVERALL COMPOSITE PANEL

GLAZING OPTIONS

AIR SPACE CONSISTING OF:
SPACER:
ST. STEEL METAL SPACER AROUND THE PERIMETER OF THE GLASS.

PRODUCT REVISED
to complying with the Florida Building Code
Acceptance No. 11-1025.02
Expiration Date 11/9/16
By Ishmy L. Chanda
Miami Dade Product Control

G	08.29.11	GENERAL REVISION
H	10.25.11	REV. PER BNC COMMENTS
I	04.23.12	REV. PER PERA COMMENTS

Engr: JAVAD AHMAD
CIVIL
FLA. PE # 70592
C.A.N. 3538

MAY 10 2012

DWG. NO.: W98-01

CGI WINDOWS & DOORS
10100 northwest 25 street miami, florida 33172

product :	Series 450 Outswing Doors & Sidelites	
date : 10-20-97	sheet 1.2 of 7	

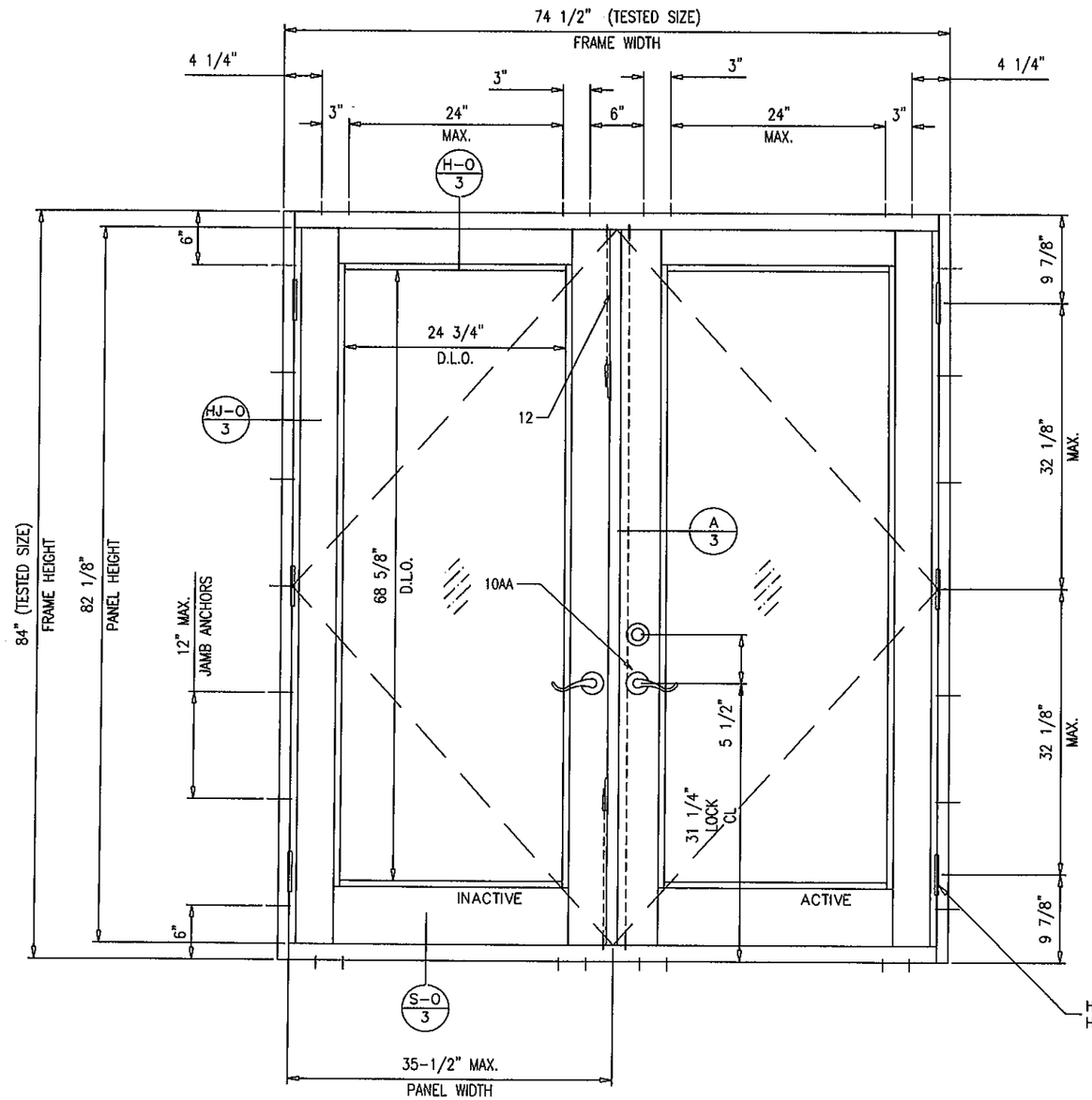

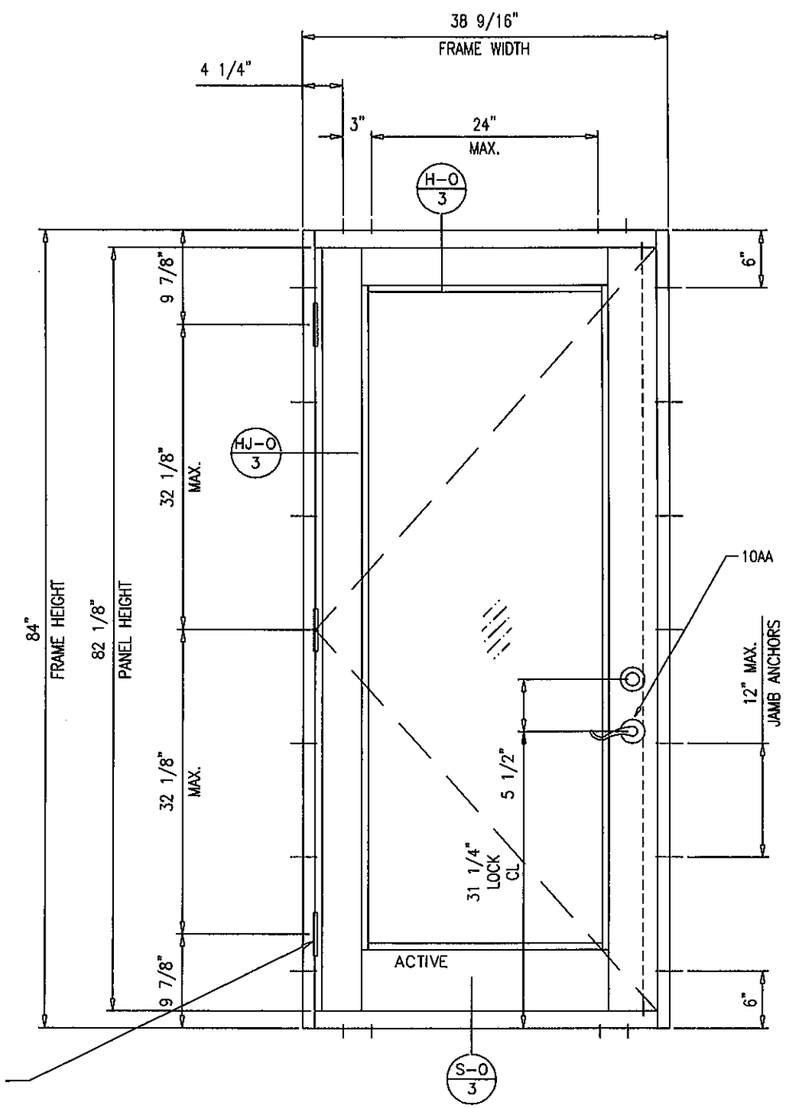

PRODUCT REVISED
to complying with the Florida
Building Code
Acceptance No 11-1025.02
Expiration Date 11/9/16
By Ishwar L. Chandra
Miami-Dade Product Control

LARGE MISSILE IMPACT

MAXIMUM DESIGN LOAD RATING = + 100.0
(FOR SIZES SHOWN ABOVE OR SMALLER UPTO CODE LIMIT) − 132.0 PSF
GLASS TYPE 'A'
LOCK OPTION 10AA CGI 3 POINT MECHANISM W/ BALDWIN SERIES 8200 DEAD BOLT

H	10.25.11	NEW SHEET ADDED
I	04.23.12	REV. PER PERA COMMENTS

Engr: JAVAD AHMAD
CIVIL
FLA. PE # 70592
C.A.N. 3538

MAY 10 2012

DWG. NO.: W98-01

CGI
WINDOWS & DOORS
10100 northwest 25 street miami, florida 33172

product : Series 450 Outswing Doors & Sidelites

date : 10-20-97 | sheet 1.3 of 7

CVR PANIC HARDWARE

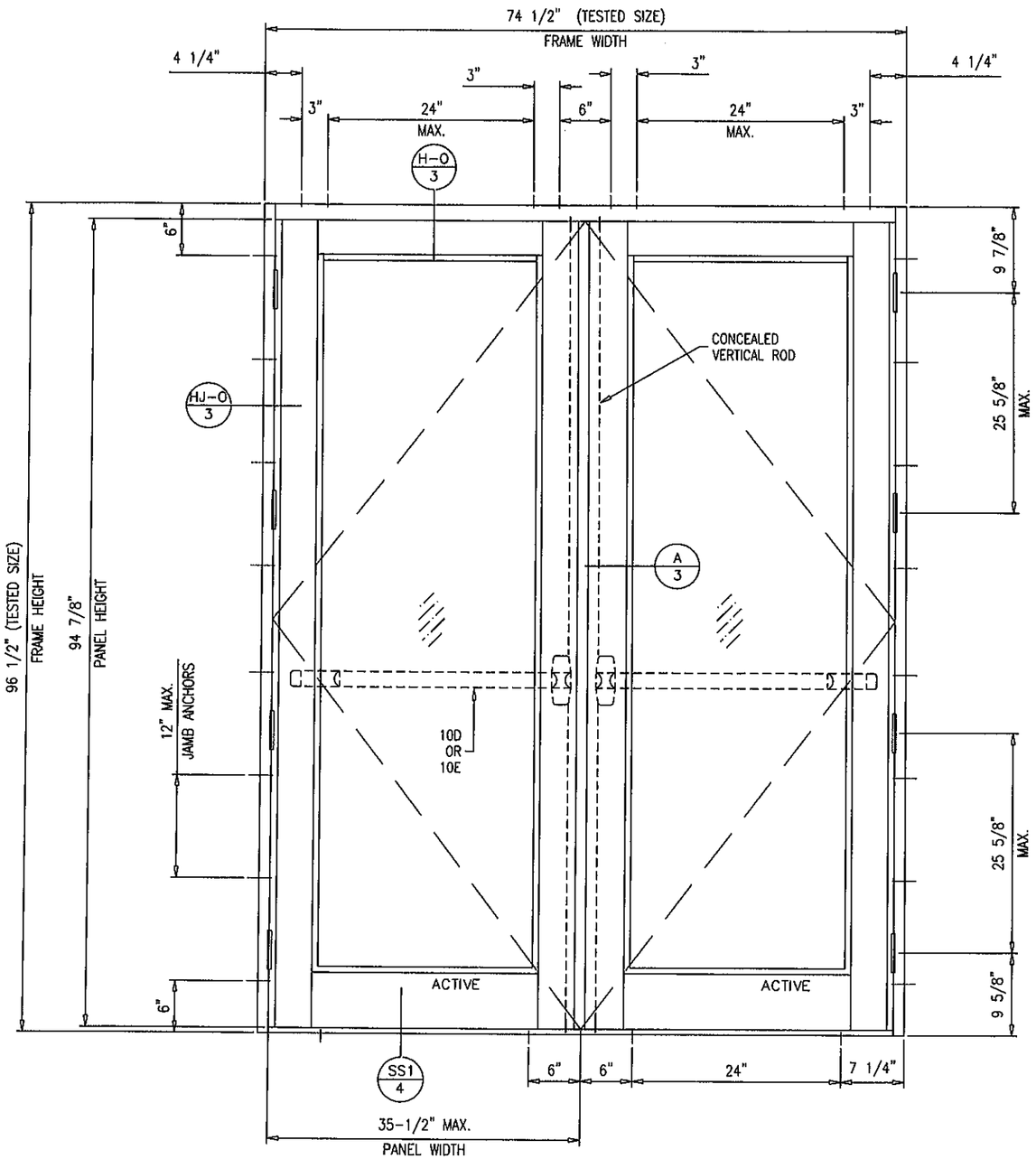

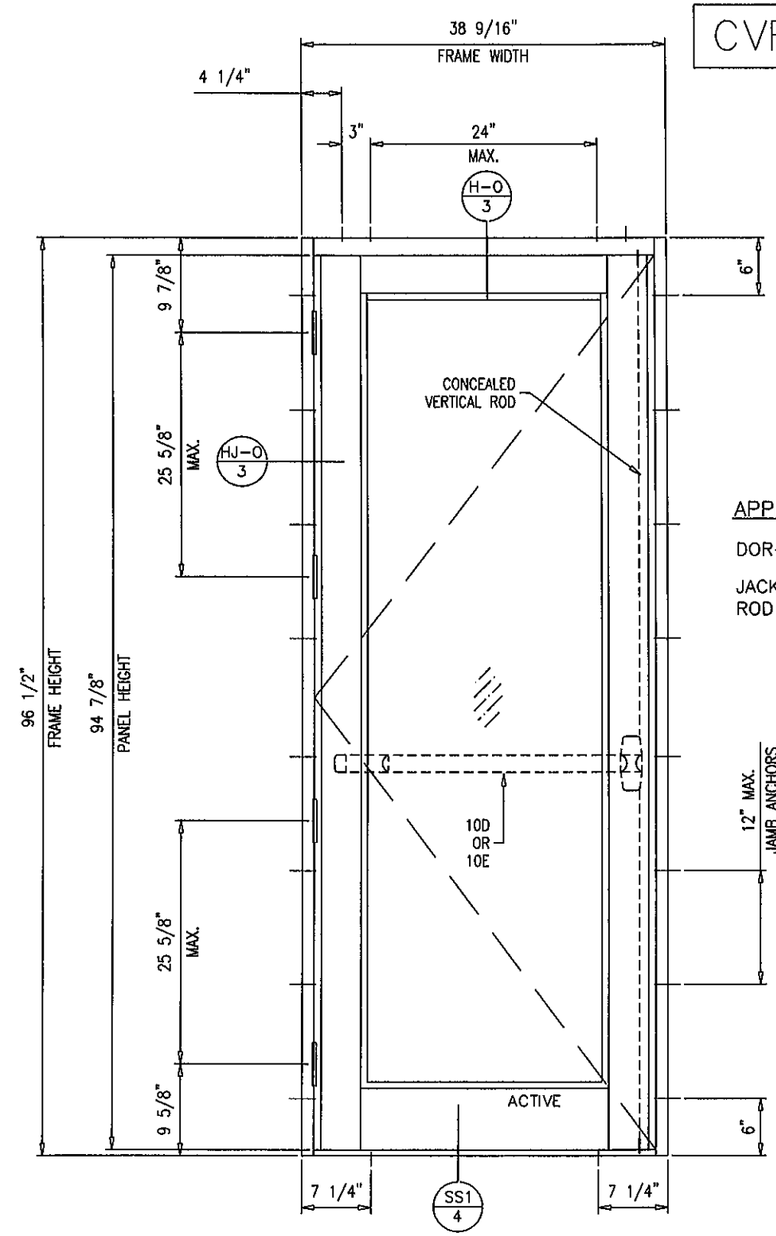

APPROVED PANIC HARDWARE FOR DOORS

DOR-O-MATIC SERIES 1690 TOUCHBAR EXIT DEVICE

JACKSON SERIES 2085/2086 CONCEALED VERTICAL ROD EXIT DEVICE

PRODUCT REVISED
to complying with the Florida Building Code
Acceptance No 11-1025.02
Expiration Date 11/9/16
By Ishaq I. Chanda
Miami Dade Product Control

DOORS LOAD CAPACITY - PSF			
FRAME HEIGHT	FRAME WIDTH	EXT.(+)	INT.(-)
96-1/2"	74-1/2"	70.0	70.0
84-1/2"	74-1/2"	80.0	80.0

DOOR NOT RATED FOR WATER INFILTRATION RESISTANCE.

QUALIFIED WITH ALL GLASS TYPES SHOWN ON SHEET 1.2

LOCK OPTIONS 10D AND 10E

H	10.25.11	NEW SHEET ADDED
I	04.23.12	REV. PER PERA COMMENTS

Engr: JAVAD AHMAD
CIVIL
FLA. PE # 70592
C.A.N. 8538

MAY 10 2012

DWG. NO.: W98-01

CGI WINDOWS & DOORS
10100 northwest 25 street miami, florida 33172

product : Series 450 Outswing Doors & Sidelites

date : 10-20-97 | sheet 1.4 of 7

BILL OF MATERIALS

ITEM	DESCRIPTION
1	#12 X 1 1/4" HEX HEAD S/S SMS (3 PER CORNER CONNECTION)
2A	3/8-16 FULLY THREADED CONTINUOUS ROD
2B	3/8-16 HEX NUT
2C	1 1/2" X 1 1/2" X 3/16"THK. ALUMINUM PLATE
3	SHEAR CLIP (EXT. NO. 506)
4	DOUBLE 9/32" DIA. JAMB INSTLL. HOLES AT 6" FROM ENDS & 24" O.C. MAX.
5	9/32" DIA. HEAD & SILL INSTLL. HOLES AT 6" FROM ENDS, 3 @ CENTER OF PAIRS SPACED 6" O.C. & 24" O.C. MAX.
6	#10 X 1" PH-PH-SS TEKS SCREW, @ 3" & 7" FROM ENDS & 19-3/8" O.C. MAX.
7	#14 X 3/4" HEX HEAD S/S TEKS SCREW AT 6" FROM ENDS & 24 3/16" O.C. MAX.
8	.320 HIGH WOOL PILE WITH CENTER FIN (ULTRAFAB # 3032)
9	.350 HIGH FOAM-TITE WEATHERSEAL (AMESBURY # 32011)
10	ACTIVE PANEL LOCK OPTIONS (SEE SHEET 1.1 FOR LIMITS)
10A	CGI CUSTOM 3 POINT LOCK 4503PL, CONSISTING OF (2) CGI CUSTOM END BOLTS (TOP & BOTTOM), ATTACHED WITH #10 X 3/4" PH SMS, (1) CGI CUSTOM INTERIOR LINKAGE MECHANISM, (1) DEADBOLT BY COPPER CREEEK SERIES E MODEL D82410.
10AA	CGI CUSTOM 3 POINT LOCK 4503PL, CONSISTING OF (2) CGI CUSTOM END BOLTS (TOP & BOTTOM), ATTACHED WITH #10 X 3/4" PH SMS, (1) CGI CUSTOM INTERIOR LINKAGE MECHANISM, (1) DEADBOLT BY BALDWIN SERIES 8200, KWIKSET 780.
10B	REGENT COMMERCIAL 2222 THREE POINT LOCK MECHANISM WITH MORTISE LOCK.
10C	SINGLE POINT LOCK (1) DEADBOLT BY BALDWIN SERIES 8200.
10CC	SINGLE POINT LOCK (1) DEADBOLT BY COPPER CREEK SERIES D82410.
10D	DOR-O-MATIC SERIES 1690 TOUCHBAR PANIC EXIT DEVICE WITH CONCEALED VERTICAL ROD SEE SHEET 1.4.
10E	JACKSON 20 SERIES PANIC EXIT WITH 2085/2086 CONCEALED VERTICAL ROD EXIT DEVICE SEE SHEET 1.4.
10F	CGI CUSTOM SURFACE MOUNTED SLIDE BOLTS WITH CGI END BOLTS AT ACTIVE LEAF (AT TOP & BOTTOM) WITH BALDWIN SERIES 8200 DEAD BOLT.
11	HAGER 4 1/2" X 4" HINGE IN SOLID BRASS OR STAINLESS STEEL CGI 4-1/2" X 4" HINGE IN ALUMINUM SECURED WITH (8) #12-24 X 1/2" F.H. M.S. (3 PER PANEL UP TO 7'-6 3/4" HIGH) (4 PER PANEL OVER 7'-6 3/4")
12	CGI FLUSHBOLT AT TOP & BOTTOM OF INACTIVE LEAF, HOUSING ATTACHED TO PANEL STILE WITH #10 X 3/4" PH SMS, ACTIVATOR ATTACHED WITH #8 X 1/2" PH SMS.
13	SEE SHEET 1.2 FOR GLAZING OPTIONS
14	SILICONE GE-1200, DOW 995, DOW 899
17	1/2" X 1/2" CONTINUOUS CLOSED CELL FOAM TAPE WITH ONE SIDE ADHESIVE
18	PLASTIC WEEP BAFFLE
19	7/8" X 5" X 1/8" THK. CONTINUOUS ALUMINUM SILL ANGLE ADAPTOR

EXT. = EXTRUSION LIST 500A, 501, 502, 503, 504, 507, 509, 510, 514, 515, 519, 539, & 540 ALL EXTRUSIONS ARE 6063-T6.

375, 396, 505, 508, 511 EXTRUSIONS ARE 6063-T5.

PRODUCT REVISED
as complying with the Florida
Building Code
Acceptance No. 11-1025.02
Expiration Date 11/9/11
By Ishwar J. Chand
Miami-Dade Product Control

E	10.16.06	REV. PER BCCO COMMENTS
F	07.10.09	UPDATED FOR 2007 FBC
G	08.29.11	GENERAL REVISION
H	10.25.11	REV. PER BNC COMMENTS
I	04.23.12	REV. PER PERA COMMENTS

Engr: JAVAD AHMAD
CIVIL
FLA. PE. # 70592
C.A.N. 3538
MAY 10 2012

DWG. NO.: W98-01

CGI
WINDOWS & DOORS
10100 northwest 25 street miami, florida 33172

product :	Series 450 Outswing Doors & Sidelites	
date : 10-20-97		sheet 2 of 7

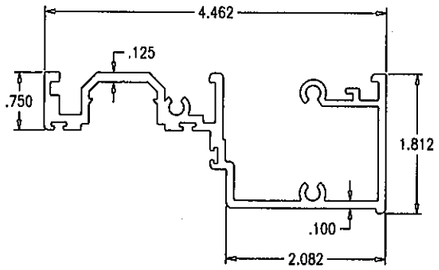

CGI-507
DOOR FRAME HEAD/SILL

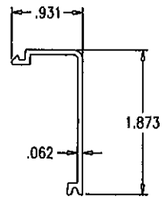

CGI-511
JAMB COVER

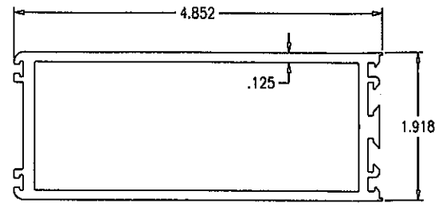

CGI-502
JAMB/LOCK/SIDELITE STILE

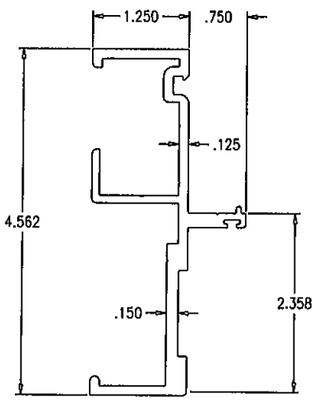

CGI-509
FRAME JAMB/MULLION

CGI-503
NARROW SIDELITE STILE

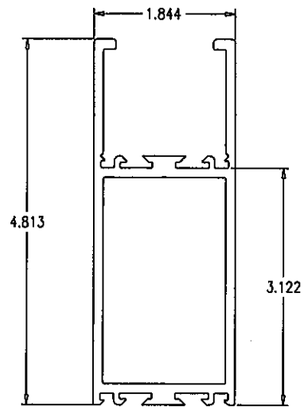

CGI-500A
TOP RAIL

CGI-505
ASTRAGAL

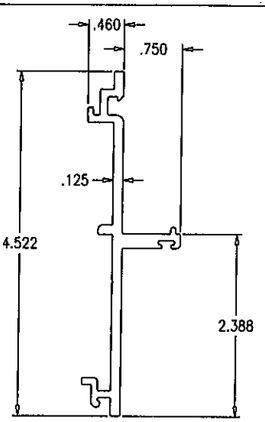

CGI-510
SIDELITE MULLION

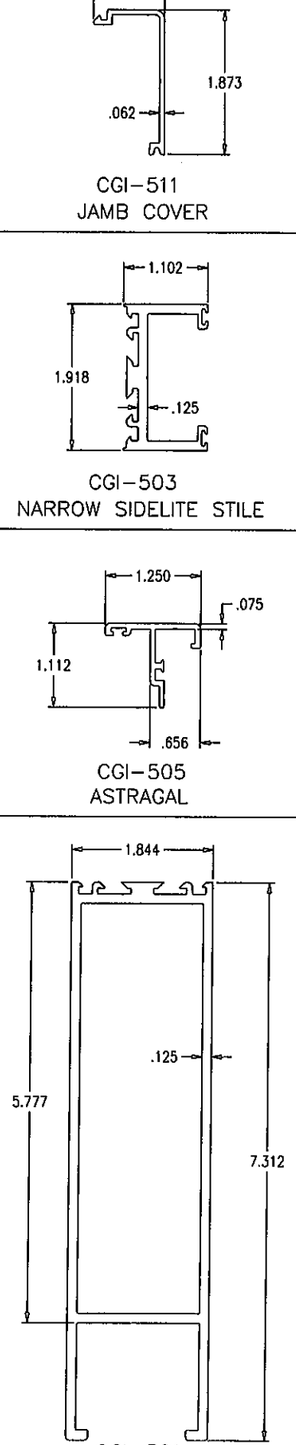

CGI-501
BOTTOM RAIL

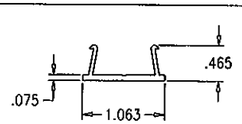

CGI-508
FRAME COVER

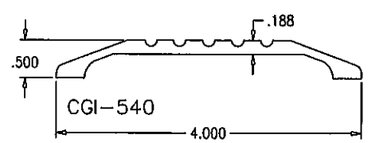

CGI-540

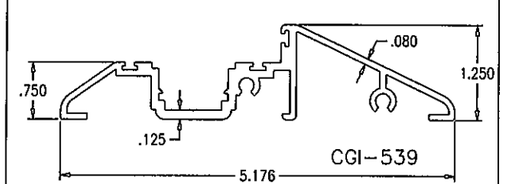

CGI-539

SADDLE THRESHOLDS

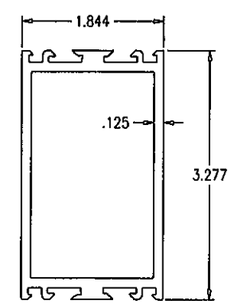

CGI-514
HORIZONTAL MUNTIN

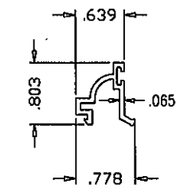

CGI-375

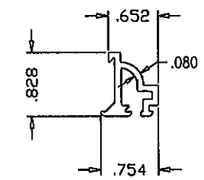

CGI-504

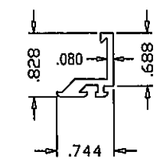

CGI-515

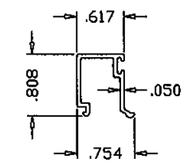

CGI-396

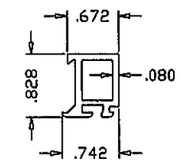

CGI-519

PRODUCT REVISED
as complying with the Florida
Building Code
Acceptance No 11-1025.02
Expiration Date Nov 9, 2016
By Ishan J. Chauhan
Miami Dade Product Control

DWG. NO.: W98-01

REV. PER PERA COMMENTS 04.23.12

Engr: JAVAD AHMAD
CIVIL
FLA. PE # 70592
C.A.N. 3538

MAY 10 2012

CGI
WINDOWS & DOORS
10100 northwest 25 street miami, florida 33172

product :	Series 450 Outswing Doors & Sidelites	
date :	10-20-97	sheet 2.1 of 7

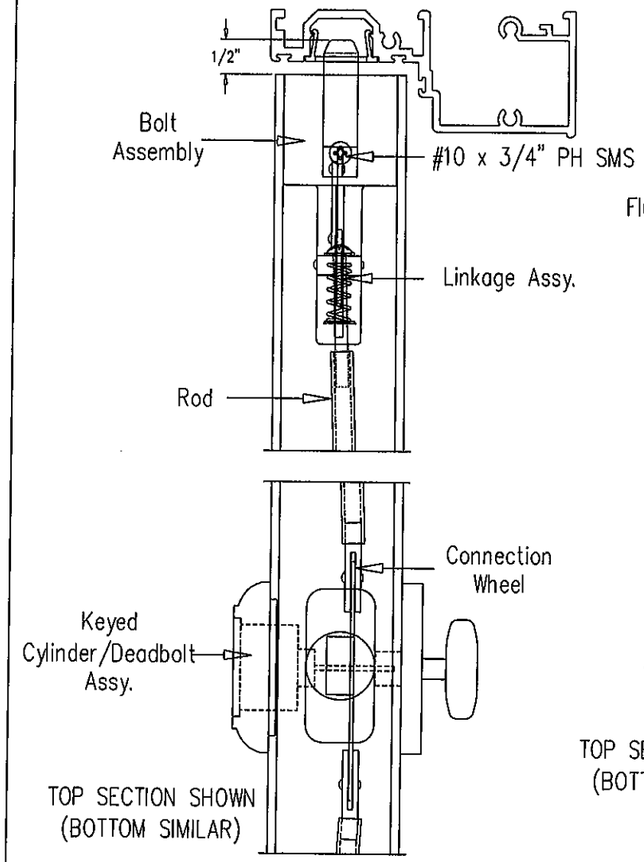

CGI CUSTOM 3-POINT LOCK

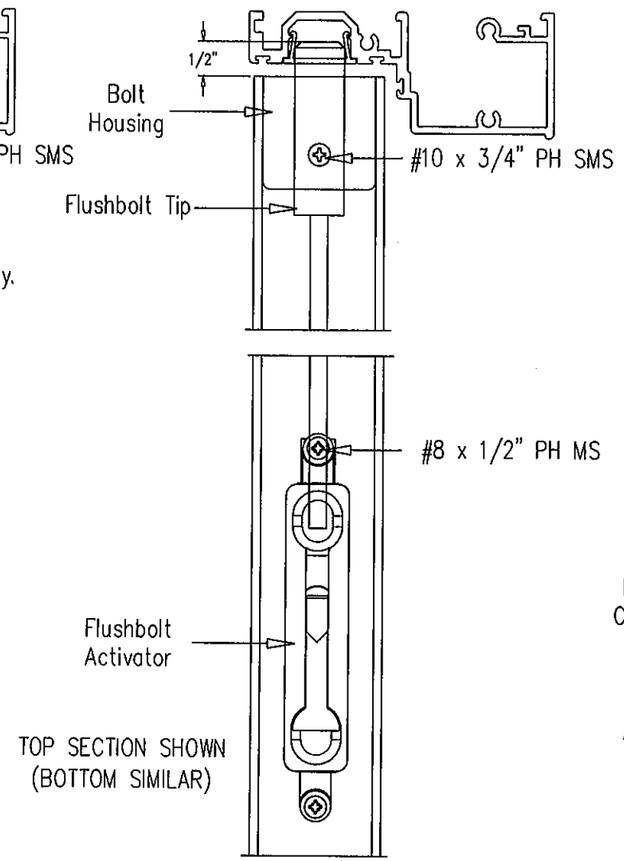

12 Flushbolts (Inactive Panel)

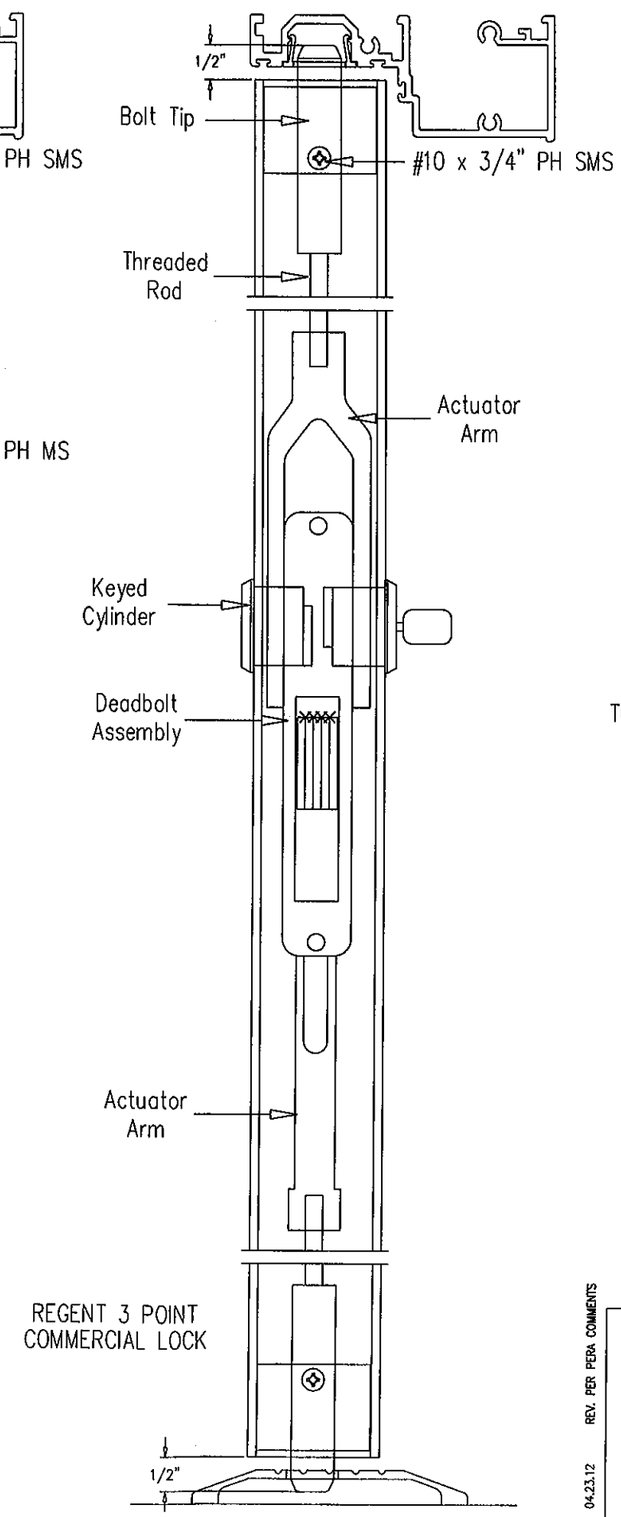

REGENT 3 POINT COMMERCIAL LOCK

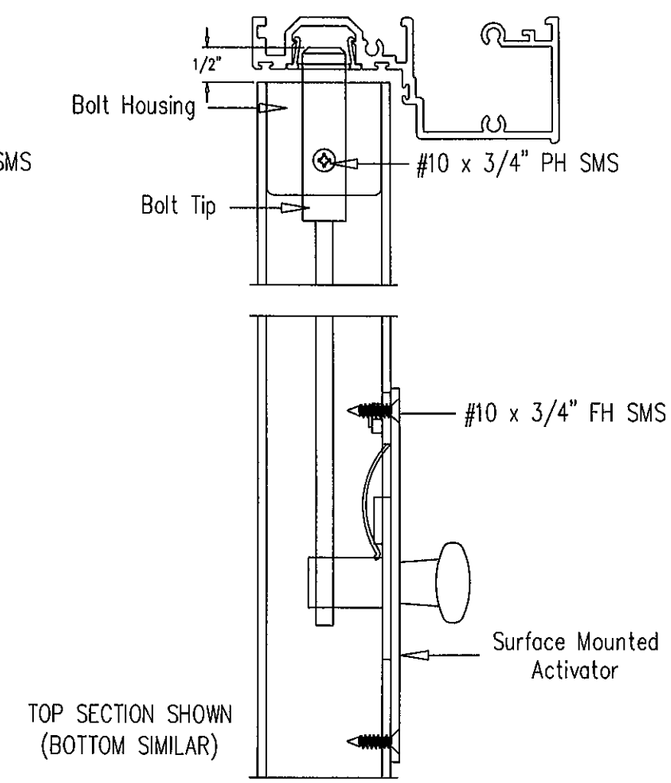

SURFACE MOUNT SLIDE BOLT WITH BALDWIN DEAD BOLT

PRODUCT REVISED
as complying with the Florida Building Code
Acceptance No 11-1025.02
Expiration Date 11/9/16
By Ishag Chaud
Miami Dade Product Control

DWG. NO.: W98-01

REV. PER PERA COMMENTS
04.23.12

Engr: JAVAD AHMAD
CIVIL
FLA. PE # 70592
C.A.N. 3538
MAY 30 2012

CGI
WINDOWS & DOORS
10100 northwest 25 street miami, florida 33172

product :	Series 450 Outswing Doors & Sidelites
date : 10-20-97	sheet 2.2 of 7

Dor-O-Matic 1690

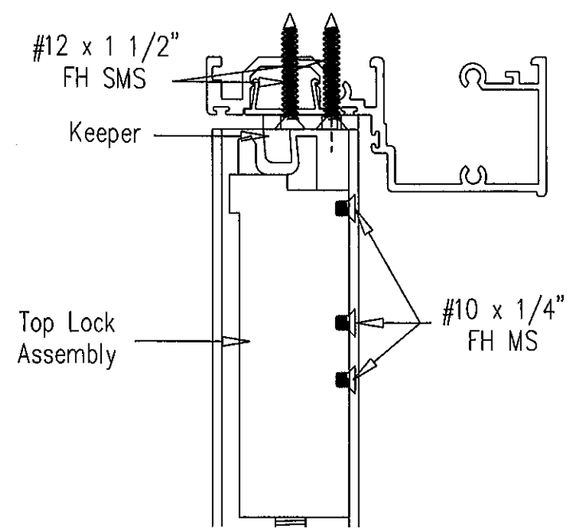

Jackson 2086I

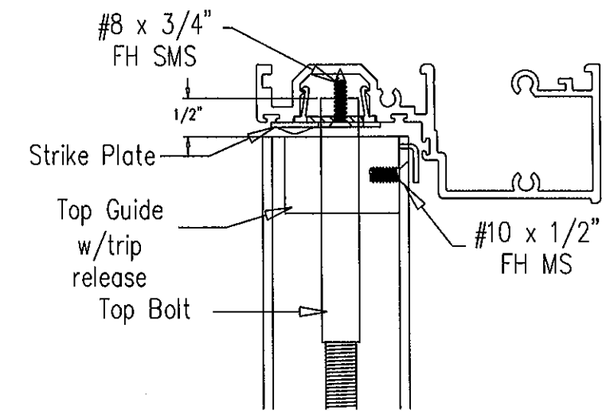

PRODUCT REVISED
as complying with the Florida
Building Code
Acceptance No 11-1025.02
Expiration Date 11/9/16
By [signature]
Miami Dade Product Control

DWG. NO.: W98-01

Engr: JAVAD AHMAD
CIVIL
FLA. PE # 70592
C.A.N. 3538

MAY 10 2012

REV. PER PERA COMMENTS
04.23.12

CGI
WINDOWS & DOORS
10100 northwest 25 street miami, florida 33172

product : Series 450 Outswing Doors & Sidelites	
date : 10-20-97	sheet 2.3 of 7

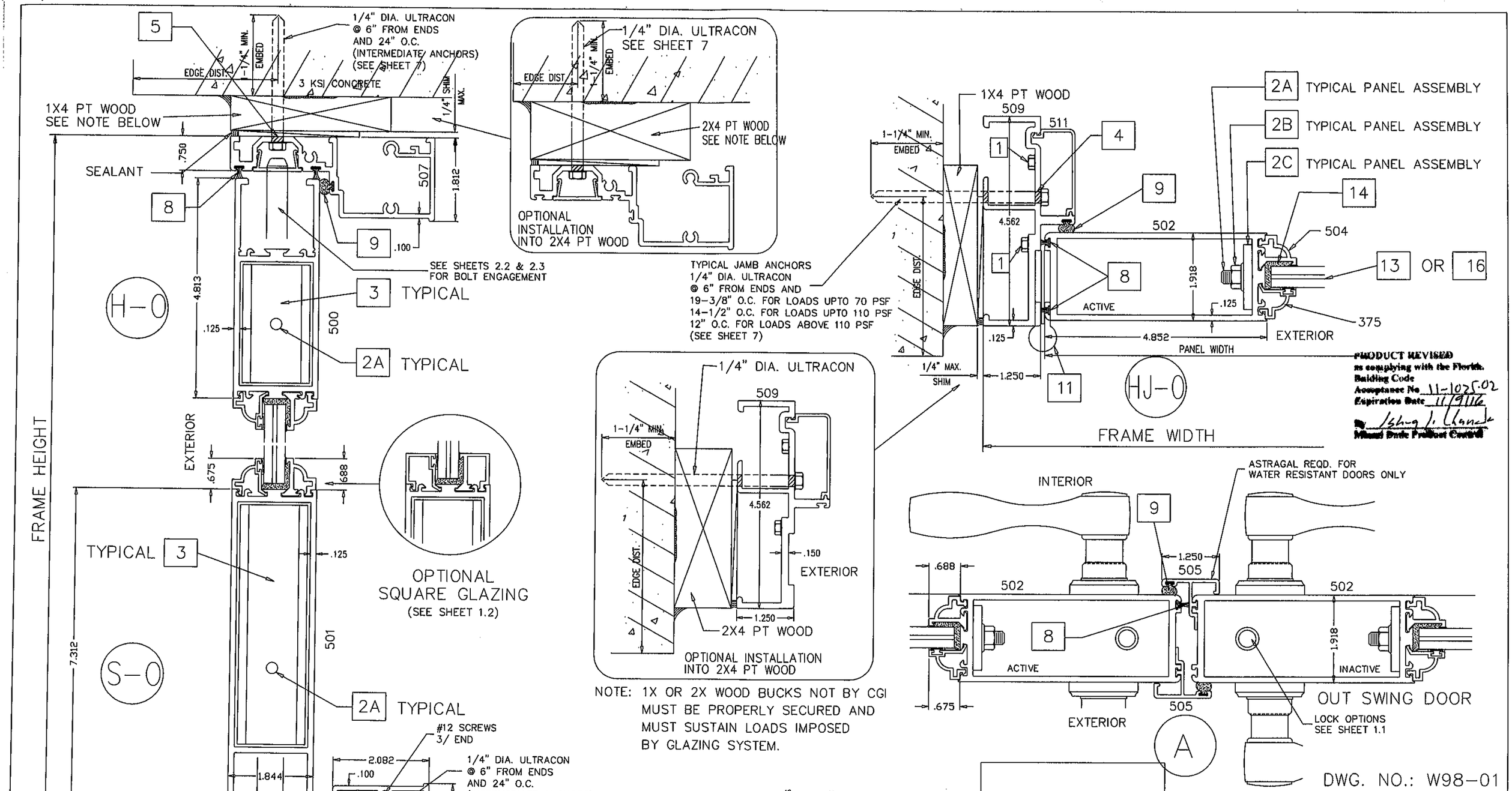

NOTE: 1X OR 2X WOOD BUCKS NOT BY CGI MUST BE PROPERLY SECURED AND MUST SUSTAIN LOADS IMPOSED BY GLAZING SYSTEM.

NOTE:
ALL ANCHOR CONDITIONS SHOWN ON SHEETS 3, 4 AND 5 MAY BE DIRECTLY TO MASONRY WITH 1/4" MAX. SHIM SPACE WITHOUT VARIATION IN CAPACITY.

PRODUCT REVISED
as complying with the Florida Building Code
Acceptance No. 11-1025.02
Expiration Date 11/9/16
By Ishwaj J. Chandra
Miami Dade Product Control

DWG. NO.: W98-01

E	10.16.06	REV. PER BCCO COMMENTS
F	07.10.09	UPDATED FOR 2007 FBC
G	08.29.11	GENERAL REVISION
H	10.25.11	REV. PER BNC COMMENTS
I	04.23.12	REV. PER PERA COMMENTS

Engr: JAVAD AHMAD
CIVIL
FLA. PE # 70592
C.A.N. 35.38
MAY 10 2012

CGI
WINDOWS & DOORS
10100 northwest 25 street miami, florida 33172

product :	Series 450 Outswing Doors & Sidelites
date : 10-20-97	sheet 3 of 7

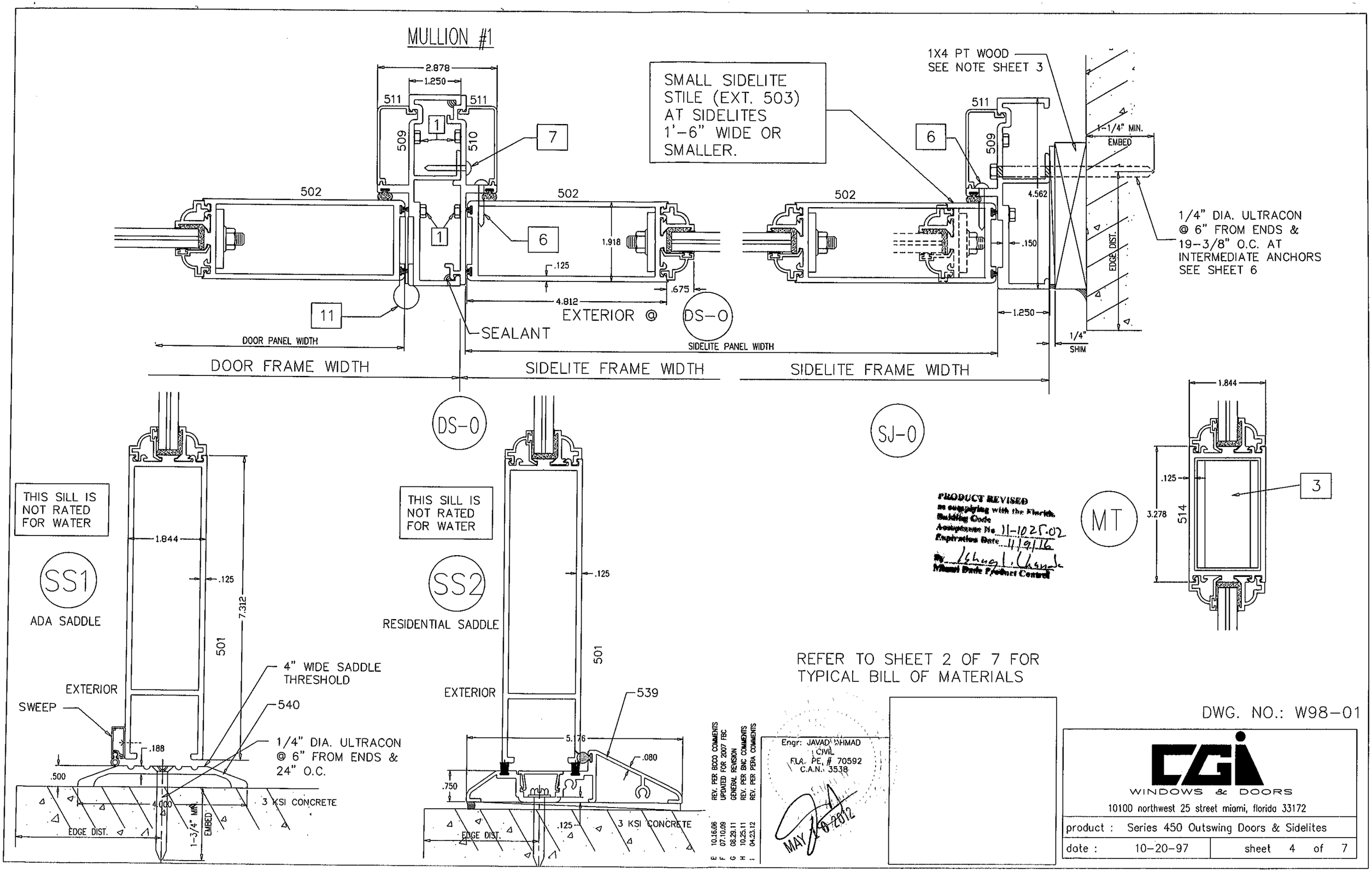
MULLION #1
2.878
1.250
511
511
509
510
1
7
502
502
1
6
1.918
.125
.675
4.812
11
EXTERIOR @ DS-0
SEALANT
DOOR PANEL WIDTH
SIDELITE PANEL WIDTH
DOOR FRAME WIDTH
SIDELITE FRAME WIDTH
SIDELITE FRAME WIDTH
SMALL SIDELITE STILE (EXT. 503) AT SIDELITES 1'-6" WIDE OR SMALLER.
1X4 PT WOOD SEE NOTE SHEET 3
511
6
509
502
4.562
.150
1.250
1-1/4" MIN. EMBED
EDGE DIST.
1/4" SHIM
1/4" DIA. ULTRACON @ 6" FROM ENDS & 19-3/8" O.C. AT INTERMEDIATE ANCHORS SEE SHEET 6
DS-0
SJ-0
THIS SILL IS NOT RATED FOR WATER
SS1
ADA SADDLE
1.844
.125
7.312
501
EXTERIOR
SWEEP
.188
.500
4.000
EDGE DIST.
1-3/4" MIN. EMBED
4" WIDE SADDLE THRESHOLD
540
1/4" DIA. ULTRACON @ 6" FROM ENDS & 24" O.C.
3 KSI CONCRETE
THIS SILL IS NOT RATED FOR WATER
SS2
RESIDENTIAL SADDLE
.125
501
EXTERIOR
539
5.176
.080
.750
.125
EDGE DIST.
3 KSI CONCRETE
1.844
.125
3.278
514
3
MT
PRODUCT REVISED
as complying with the Florida Building Code
Acceptance No. 11-1025.02
Expiration Date 11/9/16
By Ishaq I. Chanda
Miami Dade Product Control
REFER TO SHEET 2 OF 7 FOR TYPICAL BILL OF MATERIALS
E 10.16.06 REV. PER BCCO COMMENTS
F 07.10.09 UPDATED FOR 2007 FBC
G 08.29.11 GENERAL REVISION
H 10.25.11 REV. PER BNC COMMENTS
I 04.23.12 REV. PER PERA COMMENTS
Engr: JAVAD AHMAD
CIVIL
FLA. PE. # 70592
C.A.N. 3538
MAY 10 2012
DWG. NO.: W98-01
CGI
WINDOWS & DOORS
10100 northwest 25 street miami, florida 33172
product : Series 450 Outswing Doors & Sidelites
date : 10-20-97
sheet 4 of 7

MULLION TYPE 1

WIDE STILE-WIDE STILE

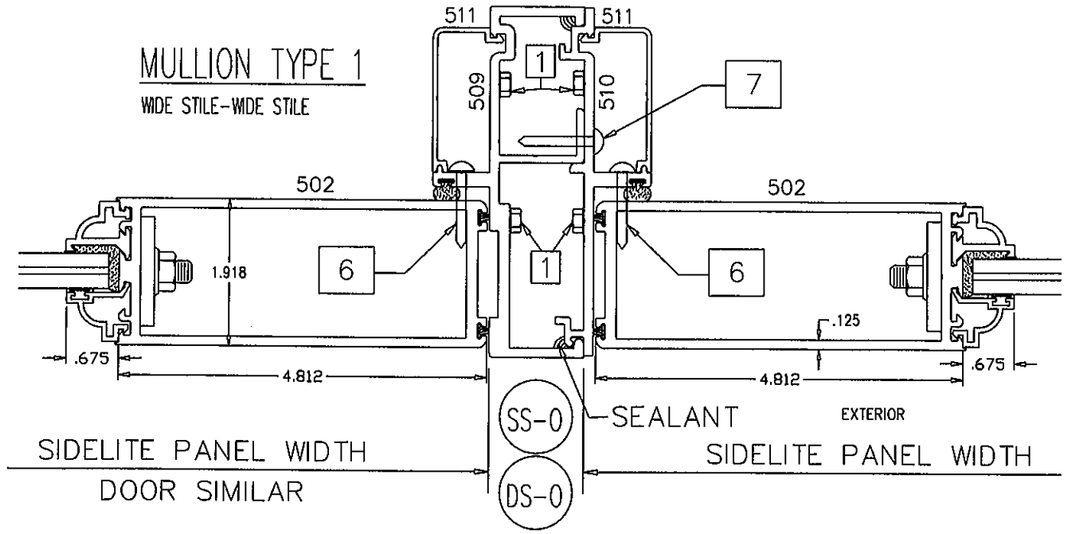

MULLION TYPE 2

WIDE STILE-NARROW STILE

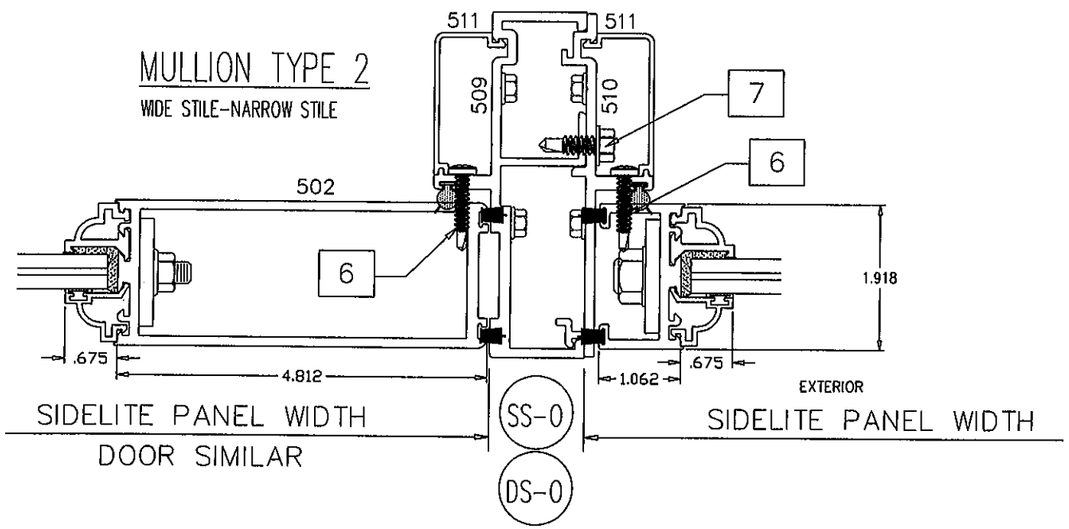

MULLION TYPE 3

NARROW STILE-NARROW STILE

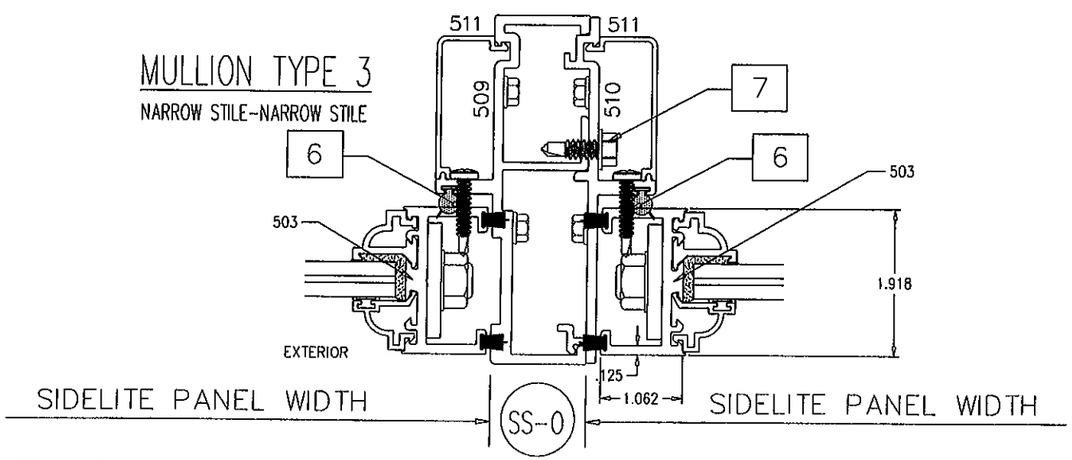

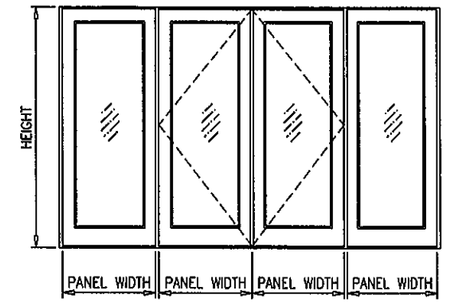

$$\text{WIDTH (W)} = \frac{\text{DOOR PANEL + FIXED PANEL}}{2}$$

PRODUCT REVISED
as complying with the Florida
Building Code
Acceptance No. 11-1025.02
Expiration Date 11/9/16
By Khay L. Chanda
Effective Date/Product Control

MULLION PERFORMANCE CHART
DESIGN LOAD CAPACITY – PSF

NOMINAL DIMS.		MULL TYPE 1		MULL TYPE 2		MULL TYPE 3	
WIDTH (W)	HEIGHT	EXT.(+)	INT.(–)	EXT.(+)	INT.(–)	EXT.(+)	INT.(–)
1/6	6/8	100.0	110.0	100.0	110.0	100.0	110.0
2/0		100.0	110.0	100.0	110.0	100.0	110.0
2/6		100.0	110.0	100.0	110.0	–	–
3/0		100.0	110.0	100.0	110.0	–	–
3/6		100.0	110.0	70.0	70.0	–	–
1/6	7/0	100.0	110.0	100.0	110.0	100.0	110.0
2/0		100.0	110.0	100.0	110.0	100.0	110.0
2/6		100.0	110.0	100.0	110.0	–	–
3/0		100.0	110.0	100.0	110.0	–	–
3/6		100.0	110.0	–	–	–	–
1/6	7/6	100.0	110.0	100.0	110.0	100.0	110.0
2/0		100.0	110.0	100.0	110.0	70.0	70.0
2/6		100.0	110.0	100.0	110.0	–	–
3/0		100.0	110.0	70.0	70.0	–	–
3/6		100.0	110.0	–	–	–	–
1/6	8/0	100.0	110.0	100.0	110.0	100.0	110.0
2/0		100.0	110.0	100.0	110.0	70.0	70.0
2/6		100.0	110.0	100.0	110.0	–	–
3/0		100.0	110.0	–	–	–	–
3/6		100.0	104.6	–	–	–	–
1/6	8/6	100.0	110.0	100.0	110.0	100.0	110.0
2/0		100.0	110.0	100.0	110.0	–	–
2/6		100.0	110.0	100.0	100.4	–	–
3/0		98.9	98.9	–	–	–	–
3/6		70.0	70.0	–	–	–	–
1/6	9/0	100.0	110.0	100.0	110.0	100.0	110.0
2/0		100.0	110.0	100.0	104.1	–	–
2/6		98.1	98.1	70.0	70.0	–	–
3/0		82.9	82.9	–	–	–	–
1/6	9/6	70.0	70.0	70.0	70.0	100.0	110.0
2/0		70.0	70.0	70.0	70.0	–	–
2/6		70.0	70.0	–	–	–	–
3/0		70.0	70.0	–	–	–	–
1/6	10/0	70.0	70.0	70.0	70.0	70.0	70.0
2/0		70.0	70.0	70.0	70.0	–	–
2/6		70.0	70.0	–	–	–	–
3/0		59.9	59.9	–	–	–	–

REFER TO SHEET 2 OF 7 FOR
TYPICAL BILL OF MATERIALS

E	10.16.06	REV. PER BCCO COMMENTS
F	07.10.09	UPDATED FOR 2007 FBC
G	08.29.11	GENERAL REVISION
H	10.25.11	REV. PER BNC COMMENTS
I	04.23.12	REV. PER PEBA COMMENTS

Engr: JAVAD AHMAD
CIVIL
FLA. PE # 70592
C.A.N. 3538
MAY 1 0 2012

DWG. NO.: W98-01

CGI
WINDOWS & DOORS
10100 northwest 25 street miami, florida 33172

product : Series 450 Outswing Doors & Sidelites

date : 10-20-97 | sheet 5 of 7

PANEL PERFORMANCE CHART FOR SINGLE & DOUBLE DOORS & SINGLE WIDE STILE SIDELITES

(THIS CHART EXCLUDE NARROW STILE SIDELITE)

DESIGN LOAD CAPACITY – PSF

NOMINAL DIMS.		GLASS TYPE 'A' 7/16" COMPOSITE PANELS 1" COMPOSITE PANELS		GLASS TYPE 'A1'		GLASS TYPES 'B' & 'B1'	
NOM. PANEL WIDTH	NOM. PANEL HEIGHT	EXT. (+)	INT. (-)	EXT. (+)	INT. (-)	EXT. (+)	INT. (-)
2/0	6/8	100.0	110.0	70.0	70.0	90.0	90.0
2/6		100.0	110.0	70.0	70.0	90.0	90.0
3/0		100.0	110.0	70.0	70.0	90.0	90.0
3/6		100.0	110.0	70.0	70.0	90.0	90.0
2/0	7/0	100.0	110.0	70.0	70.0	90.0	90.0
2/6		100.0	110.0	70.0	70.0	90.0	90.0
3/0		100.0	110.0	70.0	70.0	90.0	90.0
3/6		100.0	110.0	70.0	70.0	90.0	90.0
2/0	7/6	100.0	110.0	70.0	70.0	90.0	90.0
2/6		100.0	110.0	70.0	70.0	90.0	90.0
3/0		100.0	110.0	70.0	70.0	90.0	90.0
3/6		105.0	105.0	70.0	70.0	90.0	90.0
2/0	8/0	100.0	110.0	70.0	70.0	90.0	90.0
2/6		100.0	110.0	70.0	70.0	90.0	90.0
3/0		100.0	110.0	70.0	70.0	90.0	90.0
3/6		70.0	70.0	70.0 *	70.0 *	–	–
2/0	8/6	100.0	110.0	70.0 *	70.0 *	–	–
2/6		100.0	110.0	70.0 *	70.0 *	–	–
3/0		100.0	110.0	70.0 *	70.0 *	–	–
3/6		70.0	70.0	70.0 *	70.0 *	–	–
2/0	9/0	100.0	110.0	70.0 *	70.0 *	–	–
2/6		100.0	110.0	70.0 *	70.0 *	–	–
3/0		100.0	110.0	70.0 *	70.0 *	–	–
2/0	9/6	70.0	70.0	70.0 *	70.0 *	–	–
2/6		70.0	70.0	70.0 *	70.0 *	–	–
3/0		70.0	70.0	70.0 *	70.0 *	–	–
2/0	10/0	70.0	70.0	70.0 *	70.0 *	–	–
2/6		70.0	70.0	70.0 *	70.0 *	–	–
3/0		70.0	70.0	70.0 *	70.0 *	–	–

LOADS SHOWN ABOVE ARE FOR DOORS USING THRESHOLDS (S-0) IN ANY CONDITION AND (SS1) & (SS2) WHERE WATER INFILTRATION REQUIREMENTS ARE NOT APPLICABLE.

* GLASS LIMITED TO 8/0 DAYLITE OPENING. PANEL SIZES ABOVE 8/0 REQUIRE TRUE MUNTIN.

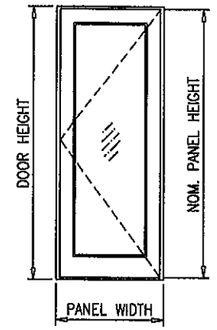

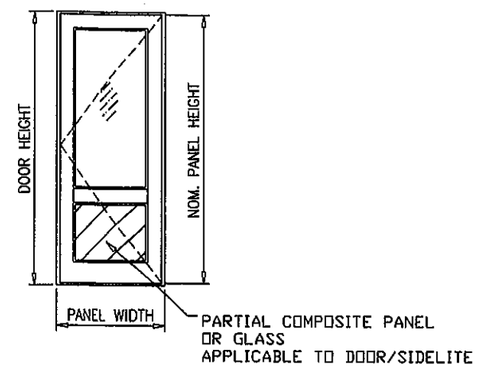

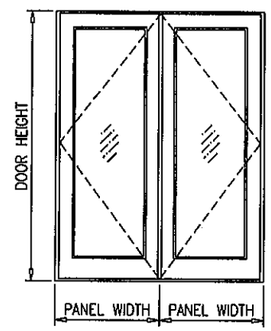

NOTE:
GLASS CAPACITIES ON THIS SHEET ARE BASED ON ASTM E1300-04 (3 SEC. GUSTS) AND FLORIDA BUILDING COMMISSION DECLARATORY STATEMENT DCA05-DEC-219

PRODUCT REVISED
as complying with the Florida Building Code
Acceptance No. 11-1025.02
Expiration Date 11/9/16
Chief, Bldg. Prod. Approval Section

THESE CHARTS CAN BE USED TO CHECK CAPACITY FOR SINGLE OR DOUBLE LEAF DOORS AND SIDELITES.

REFER TO TABLES ON SHEET 7 TO DETERMINE ANCHORS REQUIRED.

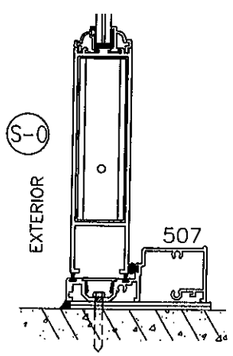

OUTSWING

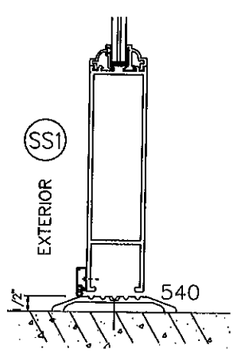

OUTSWING (SADDLE)

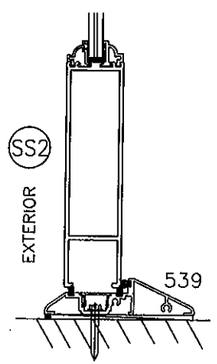

RESIDENTIAL (SADDLE)

STEPS TO USE CHARTS:

1. DETERMINE WIND LOAD BASED ON PROVISIONS OF 2010 FLORIDA BLDG. CODE.
2. DETERMINE WATER INFILTRATION REQUIREMENTS BASED ON PROVISIONS OF FBC.
3. SELECT A DOOR SYSTEM I.E. OUTSWING AND TYPE OF THRESHOLD AND LOCK OPTIONS.
4. CHECK THE ALLOWABLE EXTERIOR AND INTERIOR LOADS FROM APPROPRIATE CHART. THE ALLOWABLE LOADS MUST MEET OR EXCEED THE DESIGN LOADS REQUIREMENTS.
5. SELECT AND CHECK ANCHORS TO MEET LOAD. (SEE SHEET 7)
6. FOR MULLED SIDELITE REFER TO MULLION CAPACITY.
7. LOWER DESIGN PRESSURE FROM LOCK, GLASS, PANEL PERFORMANCE, MULLION AND ANCHOR CAPACITY AT SILL AND THRESHOLD TYPES SHALL CONTROL FOR THE ENTIRE SYSTEM.

Engr: JAVAD AHMAD
CIVIL
FLA. PE # 70592
C.A.N. 3538
MAY 1 0 2012

AL-FAROOQ CORPORATION
ENGINEERS & PROJECT DEVELOPMENT
12235 S.W. 87 AVE
MIAMI, FLORIDA 33174
TEL. (305) 264-8100 FAX. (305) 262-8978

COMP-ANL\W98-01CG

SERIES 450 OUTSWING DOOR AND SIDELITE

CGI WINDOWS & DOORS
10100 N.W. 25TH STREET
MIAMI, FL. 33172
TEL. (305) 593-6590 FAX. (305) 593-6592

revisions:

no	date	by	description
E	10.16.06		REV. PER BOCO COMMENTS
F	07.10.09		UPDATED FOR 2007 FBC
G	08.29.11		GENERAL REVISION
H	10.25.11		REV. PER BNC COMMENTS
I	04.23.12		REV. PER PBRA COMMENTS

date: 01-02-98
scale: 1/2" = 1"
dr. by: HAMID
chk. by:

drawing no.
W98-01

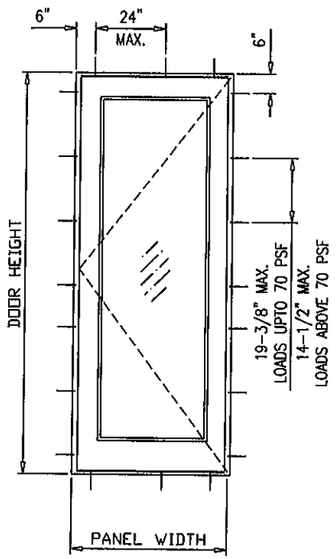

SINGLE DOOR OR SIDELITE

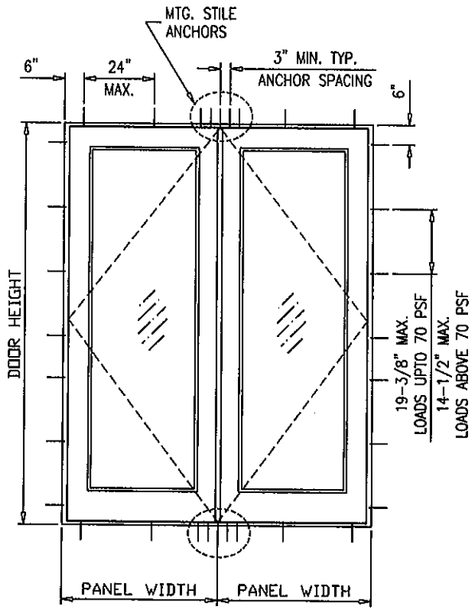

DOUBLE DOOR

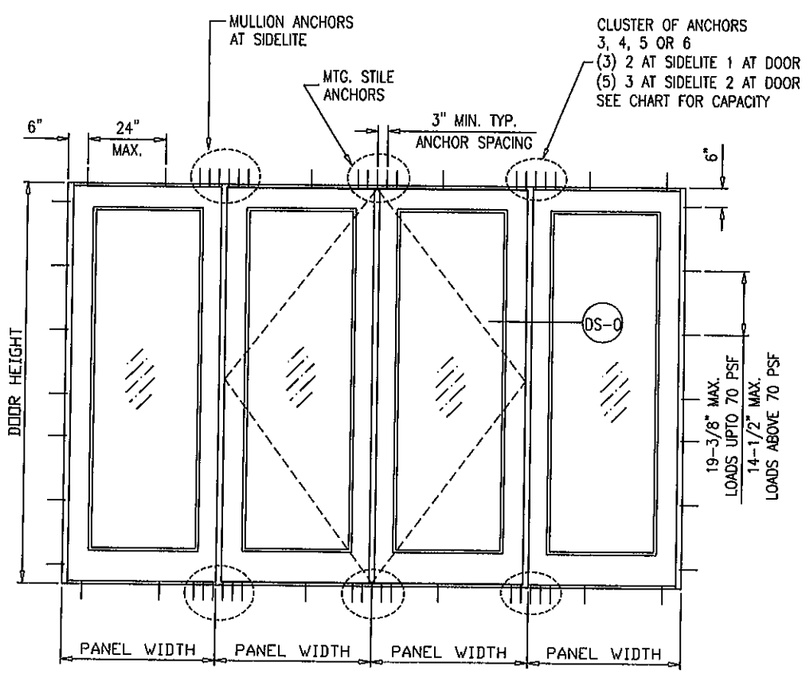

MULLION ANCHORS AT SIDELITES

NOMINAL DIMS.		DESIGN LOAD CAPACTY–PSF				
		TYPE 'B'			TYPE 'C'	
PANEL WIDTH	PANEL HEIGHT	CLUSTER OF 3 ANCHORS	CLUSTER OF 4 ANCHORS	CLUSTER OF 6 ANCHORS	CLUSTER OF 3 ANCHORS	CLUSTER OF 4 ANCHORS
2/0	6/8	100.3	110.0	110.0	110.0	110.0
2/6		81.1	110.0	110.0	110.0	110.0
3/0		68.0	90.7	110.0	110.0	110.0
3/6		58.6	78.1	110.0	101.3	110.0
2/0	7/0	95.6	110.0	110.0	110.0	110.0
2/6		77.2	103.0	110.0	110.0	110.0
3/0		64.8	86.4	110.0	110.0	110.0
3/6		55.8	74.4	110.0	96.5	110.0
2/0	7/6	89.3	110.0	110.0	110.0	110.0
2/6		72.1	96.2	110.0	110.0	110.0
3/0		60.5	80.7	110.0	104.6	110.0
3/6		52.1	69.5	104.3	90.1	110.0
2/0	8/0	83.7	111.6	110.0	110.0	110.0
2/6		67.7	90.2	110.0	110.0	110.0
3/0		56.8	75.7	110.0	98.1	110.0
3/6		48.9	65.2	97.8	84.5	107.8
2/0	8/6	78.8	105.1	110.0	110.0	110.0
2/6		63.7	84.9	110.0	110.0	110.0
3/0		53.5	71.3	106.9	92.4	110.0
3/6		46.0	61.4	92.1	79.6	101.5
2/0	9/0	74.5	99.3	110.0	110.0	110.0
2/6		60.2	80.3	110.0	104.0	110.0
3/0		50.5	67.3	110.0	87.3	110.0
2/0	9/6	70.6	94.1	110.0	110.0	110.0
2/6		57.0	76.1	110.0	98.6	110.0
3/0		47.9	63.8	95.7	82.7	105.6
2/0	10/0	67.1	89.4	110.0	110.0	110.0
2/6		54.2	72.3	108.4	93.7	110.0
3/0		45.5	60.6	91.0	78.6	100.3

MTG. STILE ANCHORS AT DOUBLE DOORS

NOMINAL DIMS.		DESIGN LOAD CAPACTY–PSF				
		TYPE 'B' & TYPE 'C' AT SS1 SILL			TYPE 'C' AT S-0 & SS2 SILL	
PANEL WIDTH	PANEL HEIGHT	CLUSTER OF 3 ANCHORS	CLUSTER OF 4 ANCHORS	CLUSTER OF 5 ANCHORS	CLUSTER OF 3 ANCHORS	CLUSTER OF 4 ANCHORS
2/0	6/8	105.7	110.0	110.0	110.0	110.0
2/6		84.5	110.0	110.0	110.0	110.0
3/0		70.4	93.9	110.0	110.0	110.0
3/6		60.4	80.5	110.0	110.0	110.0
2/0	7/0	100.7	110.0	110.0	110.0	110.0
2/6		80.5	107.4	110.0	110.0	110.0
3/0		67.1	89.5	110.0	110.0	110.0
3/6		57.5	76.7	110.0	108.0	110.0
2/0	7/6	94.0	110.0	110.0	110.0	110.0
2/6		75.2	100.3	110.0	110.0	110.0
3/0		62.7	83.6	110.0	110.0	110.0
3/6		53.7	71.6	107.4	100.9	110.0
2/0	8/0	88.2	110.0	110.0	110.0	110.0
2/6		70.5	94.1	110.0	110.0	110.0
3/0		58.8	78.4	110.0	110.0	110.0
3/6		50.4	67.2	100.8	94.6	110.0
2/0	8/6	83.0	110.0	110.0	110.0	110.0
2/6		66.4	88.6	110.0	110.0	110.0
3/0		55.4	73.8	110.0	103.9	110.0
3/6		47.4	63.3	94.9	89.1	110.0
2/0	9/0	78.5	104.6	110.0	110.0	110.0
2/6		62.8	83.7	110.0	110.0	110.0
3/0		52.3	69.7	104.6	98.2	110.0
2/0	9/6	74.4	99.1	110.0	110.0	110.0
2/6		59.5	79.3	110.0	110.0	110.0
3/0		49.6	66.1	99.1	93.1	110.0
2/0	10/0	70.7	94.2	110.0	110.0	110.0
2/6		56.5	75.4	110.0	106.1	110.0
3/0		47.1	62.8	94.2	88.4	110.0

TYPICAL ANCHORS SPACED AS SHOWN IN DETAILS AND CHARTS.
ANCHORS TO BE AT 6" FROM CORNERS
MAX. SPACING 24" O.C. AT HEAD & SILL.

ANCHORS:

TYPE 'B'– 1/4" DIA. ULTRACON BY 'ELCO' (Fu=177 KSI, Fy=155 KSI)

INTO 2BY WOOD BUCKS OR WOOD STRUCTURES
1–1/2" MIN. PENETRATION INTO WOOD

THRU 1BY WOOD BUCKS INTO CONCRETE
1–1/4" MIN. EMBED INTO CONC. OR MASONRY

DIRECTLY INTO CONCRETE
1–1/4" MIN. EMBED INTO CONC. OR MASONRY

–AT HEAD

EDGE DISTANCES

INTO CONCRETE AND MASONRY = 2" MIN.
INTO WOOD STRUCTURE = 1" MIN.

TYPE 'C'– 1/4" DIA. ULTRACON BY 'ELCO' (Fu=177 KSI, Fy=155 KSI)

DIRECTLY INTO CONCRETE
1–3/4" MIN. EMBED INTO CONC.

–AT HEAD OR SILL

EDGE DISTANCES

INTO CONCRETE = 2–1/2" MIN.

CONCRETE f'c = 3000 PSI MIN.
C–90 HOLLOW/FILLED BLOCK f'm = 2000 PSI MIN.

STEPS TO USE CHARTS:

1. SELECT TYPE OF ANCHOR.
2. FOR SIZE OF UNITS DETERMINE ALLOWABLE LOAD CAPACITY. THIS LOAD CAPACITY MUST MEET OR EXCEED DESIGN WIND LOAD REQUIREMENT DETERMINE IN STEP 1 OF SHEET 6.

PRODUCT REVISED
to comply with the Florida Building Code
Acceptance No. 11-1021.02
Expiration Date 11/9/16
By Ishaq I. Lakhani
Miami Date Product Control

Engr: JAVAD AHMAD
CIVIL
FLA. PE # 70592
C.A.N. 3538
MAY 10 2012

AL-FAROOQ CORPORATION
ENGINEERS & PRODUCT DEVELOPMENT
12295 S.W. 87 AVE
MIAMI, FLORIDA 33174
TEL. (305) 264-8100 FAX. (305) 262-8978

COMP-ANL\W98-01CG

SERIES 450 OUTSWING DOOR AND SIDELITE

CGI WINDOWS & DOORS
10100 N.W. 25TH STREET
MIAMI, FL. 33172
TEL. (305) 593-6590 FAX. (305) 593-6592

revisions:

no	date	by	description
E	10.16.06		REV. PER BCCO COMMENTS
F	07.10.09		UPDATED FOR 2007 FBC
G	08.29.11		GENERAL REVISION
H	10.25.11		REV. PER BNC COMMENTS
I	04.23.12		REV. PER PERA COMMENTS

date: 01-02-98
scale: 1/2" = 1"
dr. by: HAMID
chk. by:

drawing no.
W98-01

sheet 7 of 7

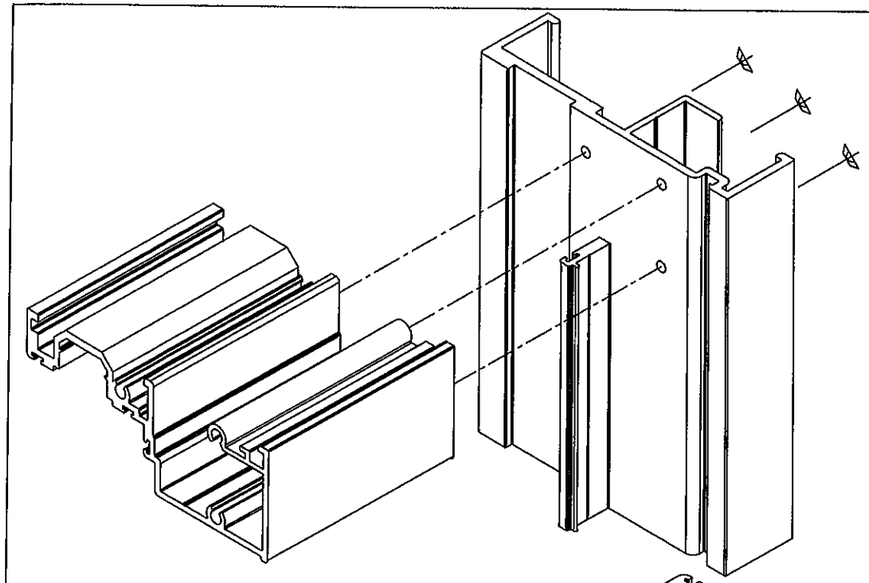

HEAD CORNER DETAIL

CORNERS TO BE SEALED WITH
LOW MODULUS SILICONE SILPRUF.

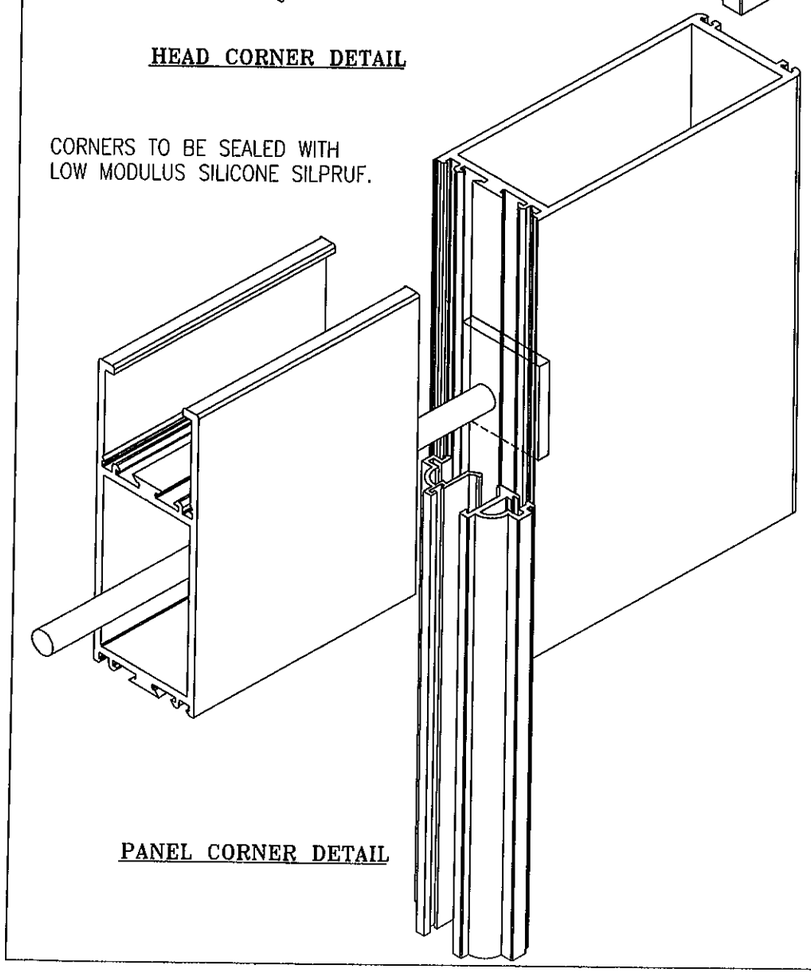

PANEL CORNER DETAIL

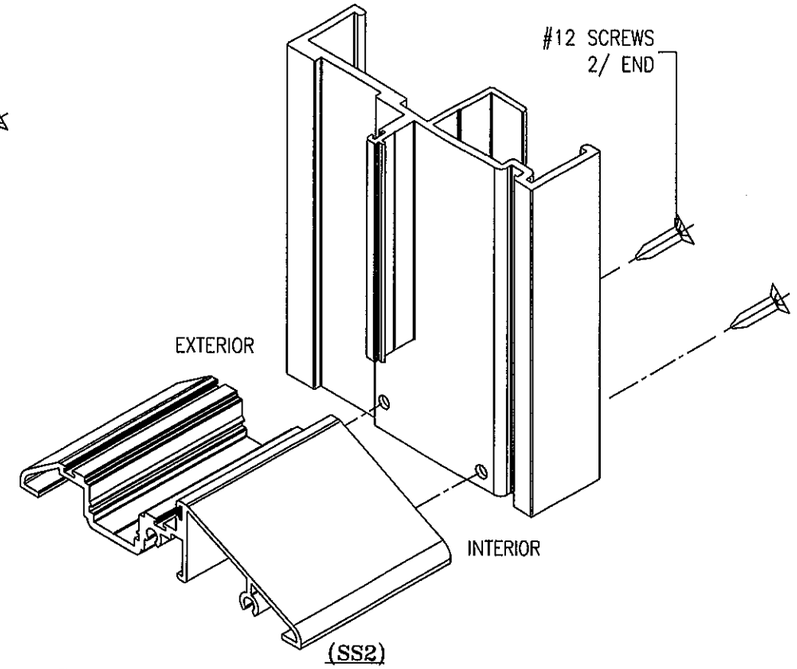

(SS2)
RESIDENTIAL SADDLE SILL CORNER CONSTRUCTION

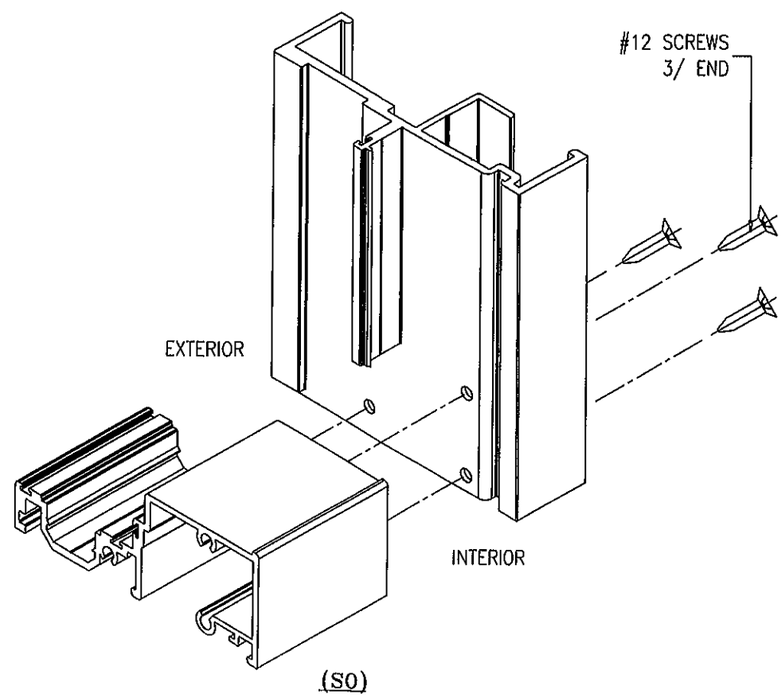

(SO)
STD. SILL CORNER DETAIL

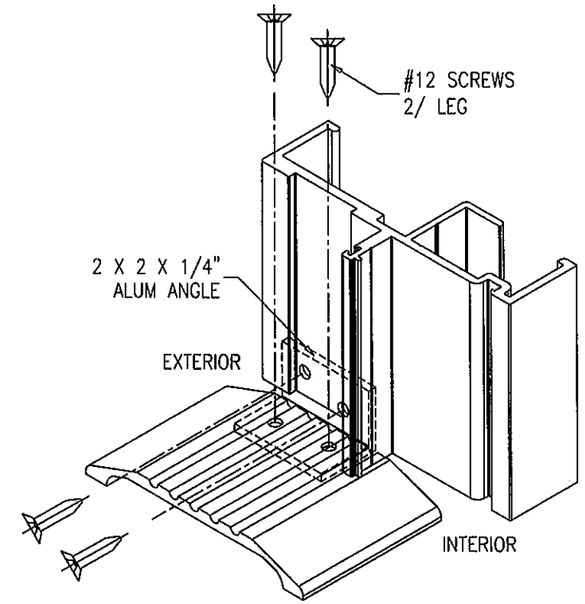

(SS1)
ADA SILL CORNER DETAIL

PRODUCT REVISED
as complying with the Florida
Building Code
Acceptance No. 11-1025.02
Expiration Date Nov 09, 2016
By Ishan J. Chavda
Miami-Dade Product Control

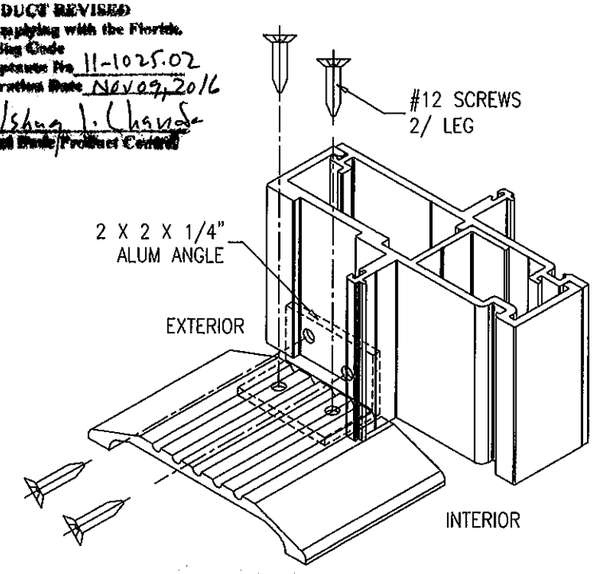

ADA SILL @ MULLION

Engr: JAVAD AHMAD
CIVIL
FLA. PE # 70592
C.A.N. 3538
MAY 10 2012

AL-FAROOQ CORPORATION
ENGINEERS & PRODUCT DEVELOPMENT
1235 S.W. 87 AVE
MIAMI, FLORIDA 33174
TEL. (305) 264-8100 FAX. (305) 262-8978
COMP-ANL\W98-01CG

SERIES 450 OUTSWING DOOR AND SIDELITE

CGI WINDOWS & DOORS
10100 N.W. 25TH STREET
MIAMI, FL. 33172
TEL. (305) 593-6590 FAX. (305) 593-6592

revisions:

no	date	by	description
E	10.16.06		REV. PER BCCO COMMENTS
F	07.10.09		UPDATED FOR 2007 FBC
G	08.29.11		GENERAL REVISION
H	10.25.11		REV. PER BNC COMMENTS
I	04.23.12		REV. PER PERA COMMENTS

date: 01-02-98
scale: 1/2" = 1"
dr. by: HAMID
chk. by:

drawing no.
W98-01

sheet 7.1 of 7