MIAMI-DADE COUNTY
DEPARTMENT OF PERMITTING, ENVIRONMENT, AND REGULATORY AFFAIRS (PERA)
BOARD AND CODE ADMINISTRATION DIVISION

MIAMI-DADE COUNTY
PRODUCT CONTROL SECTION
11805 SW 26 Street, Room 208
Miami, Florida 33175-2474
T (786) 315-2590 F (786) 315-2599
www.miamidade.gov/pera/

NOTICE OF ACCEPTANCE (NOA)

Kawneer Company, Inc.
555 Guthridge Court
Norcross, Georgia 30092

SCOPE:

This NOA is being issued under the applicable rules and regulations governing the use of construction materials. The documentation submitted has been reviewed and accepted by Miami-Dade County PERA -Product Control Section to be used in Miami Dade County and other areas where allowed by the Authority Having Jurisdiction (AHJ).

This NOA shall not be valid after the expiration date stated below. The Miami-Dade County Product Control Section (In Miami Dade County) and/or the AHJ (in areas other than Miami Dade County) reserve the right to have this product or material tested for quality assurance purposes. If this product or material fails to perform in the accepted manner, the manufacturer will incur the expense of such testing and the AHJ may immediately revoke, modify, or suspend the use of such product or material within their jurisdiction. PERA reserves the right to revoke this acceptance, if it is determined by Miami-Dade County Product Control Section that this product or material fails to meet the requirements of the applicable building code.

This product is approved as described herein, and has been designed to comply with the Florida Building Code, including the High Velocity Hurricane Zone.

DESCRIPTION: Series "Trifab 450" Aluminum Storefront System with Entrance Door-N.I.

APPROVAL DOCUMENT: Drawing No. **1431 Rev B,** titled "Trifab 450 Non- Impact Store Front & Entrance Way System", sheets 1 through 11 of 11, prepared by W.W Schaefer Engineering & Consulting, P.A., dated 09-06-05/11/08 and last revised on OCT 11, 2011, signed and sealed by Warren W. Schaefer, P.E., bearing the Miami-Dade County Product Control Revision stamp with the Notice of Acceptance number and expiration date by the Miami-Dade County Product Control Section.

MISSILE IMPACT RATING: None. Approved Hurricane Protection devices complying w/FBC are required for installation of this system.

Limitations:

1. When Fixed panels vertical mullion A or B used with Door jamb mullion C or D, the lower design pressures of combination governs.
2. Safety glazing materials per section 2406.3 are required at hazardous locations, as applicable with this system.
3. NOA deviation in HVHZ will require one-time approval from Miami-Dade County.
4. Butt Hinges are located 6" from top & 9-3/4" from bottom and one at mid panel. The Pivot hinges are located at top & bottom and one intermediate hinge at middle of the door.

LABELING: Each unit shall bear a permanent label with the manufacturer's name or logo, city, state and series and following statement: "Miami-Dade County Product Control Approved", unless otherwise noted herein.

RENEWAL of this NOA shall be considered after a renewal application has been filed and there has been no change in the applicable building code negatively affecting the performance of this product.

TERMINATION of this NOA will occur after the expiration date or if there has been a revision or change in the materials, use, and/or manufacture of the product or process. Misuse of this NOA as an endorsement of any product, for sales, advertising or any other purposes shall automatically terminate this NOA. Failure to comply with any section of this NOA shall be cause for termination and removal of NOA.

MIAMI-DADE COUNTY APPROVED

12/6/11

ADVERTISEMENT: The NOA number preceded by the words Miami-Dade County, Florida, and followed by the expiration date may be displayed in advertising literature. If any portion of the NOA is displayed, then it shall be done in its entirety.

INSPECTION: A copy of this entire NOA shall be provided to the user by the manufacturer or its distributors and shall be available for inspection at the job site at the request of the Building Official.

This NOA **revises & renews NOA # 08-1211.02** and consists of this page 1, 2 and evidence pages E-1, as well as approval document mentioned above.

The submitted documentation was reviewed by **Ishaq I. Chanda, P.E.**

MIAMI-DADE COUNTY
APPROVED

12/6/11

NOTICE OF ACCEPTANCE: EVIDENCE SUBMITTED

A. DRAWINGS (transferred from file # **08-1211.02**)

1. Manufacturer's die drawings and sections.
2. Drawing No. **1431 Rev B**, titled "Trifab 450 Non- Impact Store Front & Entrance Way System", sheets 1 through 11 of 11, prepared by W.W Schaefer Engineering & Consulting, P.A., dated 09-06-05/11/08 and last revised on OCT 11, 2011, signed and sealed by Warren W. Schafer, P.E.

B. TESTS (transferred from file # **08-1211.02**)

1. Test reports on: 1) Air Infiltration Test, per FBC, TAS 202-94
   2) Uniform Static Air Pressure Test, Loading per FBC TAS 202-94
   3) Water Resistance Test, per FBC, TAS 202-94
   4) Forced Entry Test, per FBC 2411 3.2.1, TAS 202-94

Along with installation diagram of an aluminum storefront system, prepared by Hurricane Test Laboratory, Inc., Test Report No.**HTL-0049-1117-04**, dated 12/03/04-03/04/05, signed and sealed by Vinu J. Abraham, P.E.

C. CALCULATIONS

1. Statement letters of conformance to FBC 2010, dated OCT 11, 2011, prepared by W. W. Schafer Engineering & Consulting, P. A., signed and sealed by Warren W. Schafer, P.E.
2. Supplement Anchor verification calculations complying w/ FBC-2010, dated 10-11-11, prepared, signed and sealed by Warren W. Schafer, P.E.
3. Anchor verification calculations dated Sep. 07, 2005 and last revised on Feb 07, 2006 and statement letter of anchor compliance to FBC 2007 dated April 15, 2008, prepared, signed and sealed by Warren W. Schafer, P.E. (transferred from file # **08-1211.02**)
4. Glazing complies with ASTME-1300-02 &-04

D. QUALITY ASSURANCE

1. Miami Dade Department of Permitting, Environment, and Regulatory Affairs (PERA).

E. MATERIAL CERTIFICATIONS

1. None

F. STATEMENTS

1. Statement letters of conformance to FBC 2010 and "No financial interest", both dated OCT11, 2011, prepared by W. W. Schafer Engineering & Consulting, P. A., signed and sealed by Warren W. Schafer, P.E.
2. Statement letters of conformance to FBC 2007 dated April 15, 2008, prepared by W. W. Schafer Engineering & Consulting, P. A., signed and sealed by Warren W. Schafer, P.E. (transferred from file # **08-1211.02**)
3. Statement of compliance, issued as part of the above referenced test reports.

G. OTHER

1. This NOA **revises & renews** NOA # **08-1211.02**, expiring on 04/20/12.
2. Previous associated file are #07-0808.04, 06-0519.02 & 05-1104.02

Ishaq I. Chanda

Ishaq I. Chanda, P.E.
Product Control Examiner
NOA No 11-1027.12
Expiration Date: April 20, 2017
Approval Date: December 15. 2011

GENERAL NOTES:

1. THESE STORE FRONT SYSTEMS HAVE BEEN TESTED, ANALYZED & APPROVED FOR DESIGN PRESSURES NOT TO EXCEED THOSE SHOWN IN THE "ALLOWABLE DESIGN PRESSURE TABLE(S).
2. OPENINGS, BUCKING & BUCKING FASTENERS MUST BE PROPERLY DESIGNED & INSTALLED TO TRANSFER WIND LOADS TO THE STRUCTURE.
3. ALL HARDWARE & FASTENERS SHALL BE IN ACCORDANCE WITH THESE DRAWINGS & SHALL NOT VARY UNLESS SPECIFICALLY MENTIONED ON THE DRAWINGS. SPECIFIED ANCHOR EMBED TO BASE MATERIAL SHALL BE BEYOND WALL FINISH OR STUCCO.
4. THE DETAILS & SPECIFICATIONS SHOWN HEREIN REPRESENT THE PRODUCTS TESTED & PROPOSED FOR WATER, AIR, FORCED ENTRY & UNIFORM STATIC AIR PRESSURE TESTING IN CONFORMANCE WITH THE FLORIDA BUILDING CODE PROTOCAL TAS-202 FOR NON-IMPACT STORE FRONTS.
5. THESE STORE FRONT SYSTEMS HAVE BEEN DESIGNED IN ACCORDANCE WITH AND MEET THE REQUIREMENTS OF THE FLORIDA BUILDING CODE (FBC) INCLUDING HIGH VELOCITY HURRICANE ZONES (HVHZ).
6. THESE STORE FRONT SYSTEMS ARE NON-IMPACT RATED & MUST BE SHUTTERED WITH A FLORIDA CODE APPROVED SHUTTER WHERE REQUIRED BY CODE.
7. ALL ANCHORS SECURING STORE FRONT FRAME TO PRESSURE TREATED BUCKS OR WOOD FRAMING SHALL BE CAPABLE OF RESISTING CORROSION CAUSED BY THE PRESSURE TREATING CHEMICALS IN THE WOOD.
8. DETERMINE THE POSITIVE & NEGATIVE DESIGN LOADS TO USE WHEN REFERENCING THESE DOCUMENTS IN ACCORDANCE WITH THE GOVERNING CODE AND GOVERNING WIND VELOCITY. FOR WIND LOAD CALCULATIONS IN ACCORDANCE WITH THE FLORIDA BUILDING CODE, A DIRECTIONALITY FACTOR OF Kd = 0.85 MAY BE APPLIED WHEN USED PER THE ASCE 7 STANDARD.
9. NO INCREASE IN ALLOWABLE STRESS HAS BEEN USED IN THE CERTIFICATION OF THIS PRODUCT. WIND LOAD DURATION FACTOR Cd = 1.6 WAS USED FOR WOOD SCREW ANALYSIS ONLY.
10. MATERIALS, INCLUDING BUT NOT LIMITED TO STEEL SCREWS, THAT COME INTO CONTACT WITH OTHER DISSIMILAR MATERIALS SHALL MEET THE REQUIREMENTS OF FLORIDA BUILDING CODE CHAPTER 20.
11. THERE SHALL BE NO LIMIT TO THE NUMBER OF HORIZONTAL & VERTICAL PANELS USED FOR ANY JOB PROVIDING ALL RESTRICTIONS ARE MET PER THE ELEVATIONS.

FRAME ANCHOR REQUIREMENTS TABLE

FRAME & SILL ANCHORS

OPENING TYPE (SUBSTRATE)	JAMB TO OPENING FASTENER TYPE	MINIMUM EMBED	MINIMUM EDGE DIST.
MIN. 2X_ WOOD FRAME OR BUCK (MIN. GR. 3 & G=0.55)	NO. 12 SMS SCREW	1 3/8"	3/4"
MIN. 16 GA. 50 KSI METAL STUD	1/4-20 SELF TAPPING SCREW	FULL	1/2"
MIN. 1/8" THK A36 STEEL	1/4-20 SELF TAPPING SCREW OR 1/4" THRU-BOLT	FULL	1/2"
(2) C-90 CMU	(1) 1/4" CONCRETE SCREW	1 1/4"	2 1/2"
3000 PSI CONCRETE	(1) 1/4" CONCRETE SCREW	1 3/4"	2 1/2"

(1) CONCRETE SCREWS SHALL BE ELCO ULTRACONS, ELCO CRETE-FLEX, ITW RAMSET/RED HEAD TAPCONS OR HILTI KWIK-CON II (HARDENED STEEL OR S.S.).
(2) CMU IS APPLICABLE AT SIDES ONLY.

CORNER & FRAME END CONSTRUCTION:

FRAME HEAD CORNER: HEAD IS SQUARE CUT, BUTTED TO SIDE, FASTENED WITH 4 NO. 12 X 1 1/8" PPHFT TYPE AB FASTENERS THROUGH THE SIDE MEMBER INTO THE HEAD MEMBER SCREW SPLINES & SEALED WITH SILICONE.

FRAME SILL CORNER: SILL IS SQUARE CUT, BUTTED TO SIDE, FASTENED WITH 2 NO. 12 X 1 1/8" PPHFT TYPE AB FASTENERS THROUGH THE SIDE MEMBER INTO THE SILL MEMBER SCREW SPLINES & SEALED WITH SILICONE.

HORIZONTAL FRAME MULLION END: MULLION IS SQUARE CUT, BUTTED TO SIDE, FASTENED WITH 2 NO. 12 X 1 1/8" PPHFT TYPE AB FASTENERS THROUGH THE SIDE MEMBER INTO THE MULLION MEMBER SCREW SPLINES & SEALED WITH SILICONE.

DOOR TRANSOM MULLION END: SEE SECTIONS E1/6, E2/7 & E3/7.

DOOR HEAD FRAME CORNERS: SEE SECTIONS L1/8, L2/8 & L3/8.

DOOR SILL CORNER: THRESHOLD WAS SQUARE CUT, BUTTED TO THE SIDE, SECURED TO THE SIDE MEMBER USING A PIVOT ASSEMBLY OR STEEL CLIP & SEALED WITH SILICONE.

DOOR PANEL TOP RAIL CORNERS: AT EACH TOP CORNER, THE TOP RAIL END IS SQUARE CUT, BUTTED, AND ATTACHED TO THE VERTICAL STILE BY MEANS OF A 1.094" LONG WELD CLIP (KAWNEER PART #200-450, #200-452, OR #200-453). EACH WELD CLIP IS ATTACHED TO THE VERTICAL STILE USING, TWO(2) 1/4-20 X 3/4" PHMS THAT PASSED THROUGH THE DOOR STILE AND ARE THREADED INTO 3/16" THICK STEEL NUT PLATES. THE INTERSECTION OF EACH CORNER JOINT WAS WELDED USING ONE(1), 1/2" DIAMETER PLUG WELD AND ONE(1), 1/4" X 1 1/8" FILLET WELD THAT ARE APPLIED TO BOTH WEBS OF THE TOP RAIL.

DOOR PANEL BOTTOM RAIL CORNERS: AT EACH BOTTOM CORNER, THE BOTTOM RAIL END IS SQUARE CUT, BUTTED, AND ATTACHED TO THE VERTICAL STILE BY MEANS OF A 1.094" LONG WELD CLIP (KAWNEER PART #200-451 OR #200-459). EACH WELD CLIP IS ATTACHED TO THE VERTICAL STILE USING, TWO(2) 1/4-20 X 3/4" PHMS THAT PASSED THROUGH THE DOOR STILE AND ARE THREADED INTO 3/16" THICK STEEL NUT PLATES. THE INTERSECTION OF EACH CORNER JOINT WAS WELDED USING ONE(1), 1/2" DIAMETER PLUG WELD AND ONE(1), 1/4" X 1 1/8" FILLET WELD THAT ARE APPLIED TO BOTH WEBS OF THE TOP RAIL.

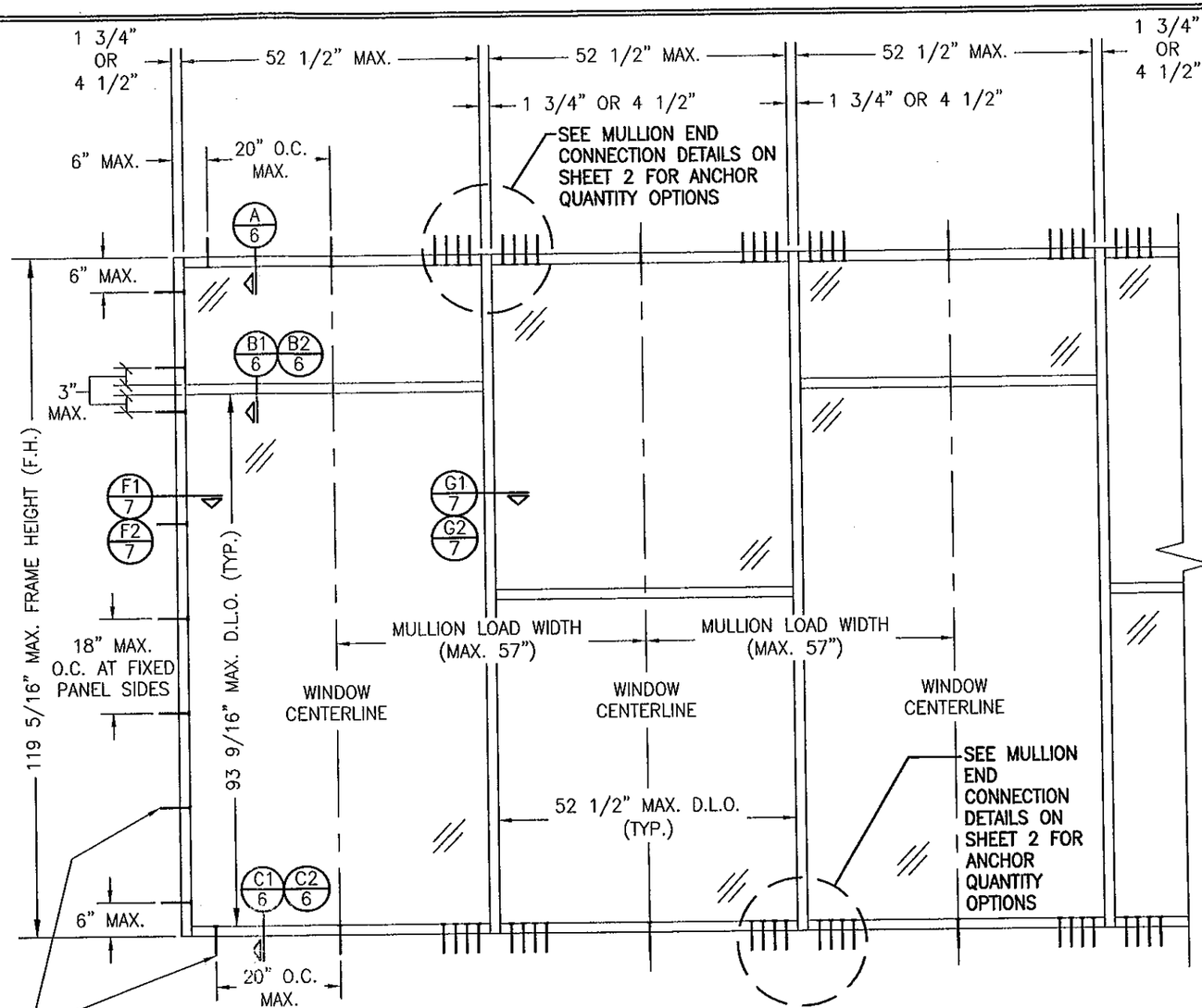

EXTERIOR ELEVATION
MULTIPLE FIXED PANEL STORE FRONT ASSEMBLY

SCALE: 1/2"=1'-0"

HORIZONTAL STACKING & OVERALL UNIT WIDTH IS UNLIMITED. NUMBER OF VERTICAL PANELS IS UNLIMITED BUT MUST FIT INSIDE MAXIMUM FRAME HEIGHT SHOWN.

ALLOWABLE DESIGN PRESSURE
SEE LOAD TABLES ON SHEET 5

PRODUCT REVISED
as complying with the Florida Building Code
Acceptance No. 11-1027.12
Expiration Date 4/20/2017
By Michael Hardy
Director, Product Control

WARREN W. SCHAEFER LICENSE No. 44135 STATE OF FLORIDA PROFESSIONAL ENGINEER

THESE DRAWINGS ARE APPLICABLE ONLY TO THE PRODUCT SPECIFIED. THEY MAY NOT BE USED FOR THE ASSEMBLY AND/OR INSTALLATION OF ANY OTHER PRODUCT NOR MAY THEY BE USED FOR RATIONAL AND/OR LOCAL APPROVAL OF ANY PRODUCT NOT PRODUCED BY THE MANUFACTURER STATED ON THESE DRAWINGS.

DRAWN BY: K.P.S.	CHECKED BY: W.W.S.
PLOT: 1=24	DATE: 09/06/05

NO.	REVISION DESCRIPTION	BY	DATE
A1	UPDATE TO PRESENT FBC & EDIT	W.W.S.	11/11/08
	LOCK CALL-OUTS		
B1	UPDATE TO CURRENT STANDARDS	W.R.M.	10/11/11

DRAWING TITLE
TRIFAB 450 NON-IMPACT STORE FRONT & ENTRANCE WAY SYSTEM

MANUFACTURER
KAWNEER COMPANY, INC.
555 GUTHRIDGE COURT
NORCROSS, GA 30092
770-449-5555

CONSULTANTS
W. W. SCHAEFER ENGINEERING & CONSULTING, P.A. (CA 6809)
7480 150TH COURT NORTH
PALM BEACH GARDENS, FL 33418
PHONE: 561-744-3424

CERTIFICATION
OCT 11 2011
WARREN W. SCHAEFER, P.E.
P.E. NO. 44135

DRAWING NO. 1431 REV. B
SHEET NO. 1 OF 11

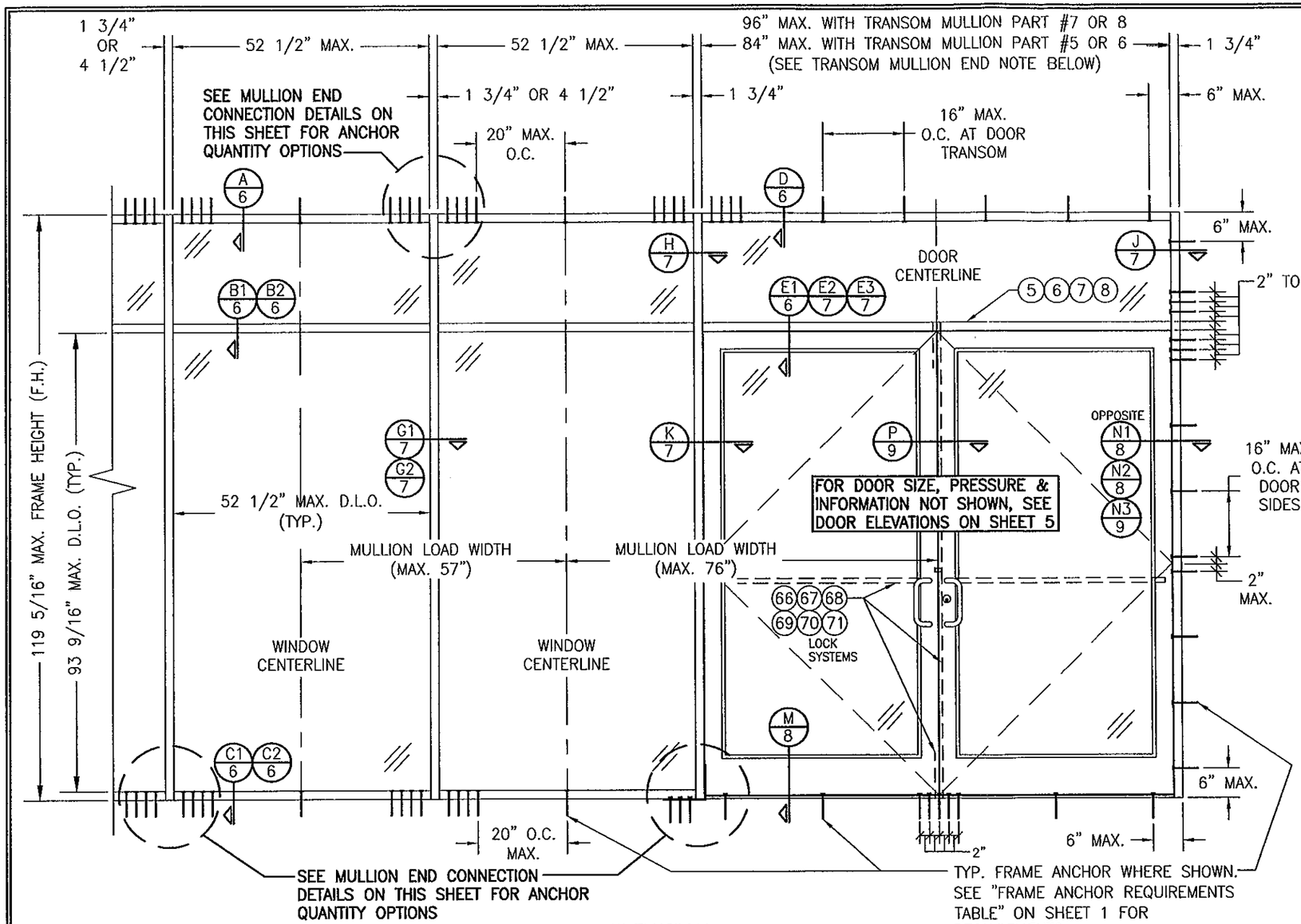

EXTERIOR ELEVATION
STORE FRONT ASSEMBLY WITH DOORS & TRANSOM

SCALE: 1/2"=1'-0"

NOTE: 1) FIXED PANELS MAY BE PLACED ON ONE OR BOTH SIDES OF DOORS.
2) DOORS MAY BE SINGLE OR DOUBLE DOORS.

TRANSOM MULLION NOTE:
WHEN TRANSOM MULLION PART #5 OR 6 IS USED, MULLION SPAN IS LIMITED TO MAX. 84". WHEN TRANSOM MULLION PART #7 OR 8 IS USED, MULLION SPAN MAY BE UP TO MAX. 96". SEE PARTS DRAWINGS FOR MULLION PARTS.

ALLOWABLE DESIGN PRESSURE
SEE LOAD TABLES ON SHEET 5

(*) THE DOORS IN THIS STORE FRONT SYSTEM ARE NOT APPROVED FOR USE WHERE WATER INFILTRATION RESISTANCE IS REQUIRED BY THE DOOR. UNLESS UNITS ARE INSTALLED IN NON--HABITABLE AREAS WHERE THE UNIT & THE AREA ARE DESIGNED TO ACCEPT WATER INFILTRATION, UNITS SHALL BE INSTALLED ONLY AT LOCATIONS PROTECTED BY A CANOPY OR OVERHANG SUCH THAT THE ANGLE BETWEEN THE EDGE OF THE CANOPY OR OVERHANG TO SILL IS LESS THAN 45 DEGREES.

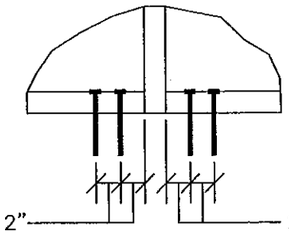

MULLION END CONNECTION DETAIL
(CONNECTION TYPE "A")
(2 ANCHORS EACH SIDE OF MULLION)

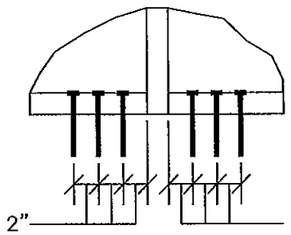

MULLION END CONNECTION DETAIL
(CONNECTION TYPE "B")
(3 ANCHORS EACH SIDE OF MULLION)

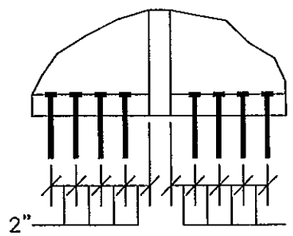

MULLION END CONNECTION DETAIL
(CONNECTION TYPE "C")
(4 ANCHORS EACH SIDE OF MULLION)

PRODUCT REVISED
as complying with the Florida Building Code
Acceptance No 11-1027.12
Expiration Date 04/20/17

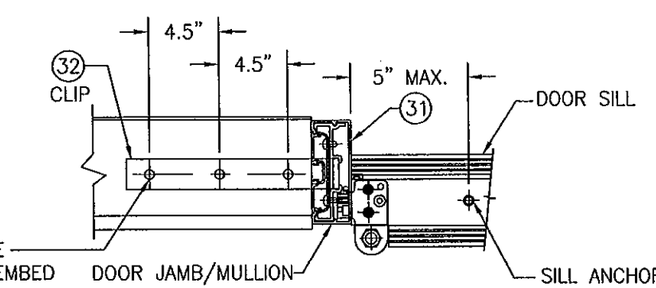

MULLION END CONNECTION DETAIL
(AT DOOR SIDE JAMB MULLION)

NOTE: THIS MULLION END CONNECTION IS EQUIVALENT IN PRESSURE CAPACITY TO CONNECTION TYPE "C".

DRAWN BY: K.P.S.	CHECKED BY: W.W.S.
PLOT: 1=24	DATE: 09/06/05

NO.	REVISION DESCRIPTION	BY	DATE

DRAWING TITLE
TRIFAB 450 NON-IMPACT STORE FRONT & ENTRANCE WAY SYSTEM

MANUFACTURER
KAWNEER COMPANY, INC.
555 GUTHRIDGE COURT
NORCROSS, GA 30092
770-449-5555

CONSULTANTS
W. SCHAEFER ENGINEERING CONSULTING, P.A. (CA 6809)
7480 150TH COURT NORTH
PALM BEACH GARDENS, FL 33418
PHONE: 561-744-3424

WARREN W. SCHAEFER
LICENSE No. 44135
STATE OF FLORIDA
PROFESSIONAL ENGINEER

DRAWING NO.	REV.
1431	B

SHEET NO. 2 OF 11

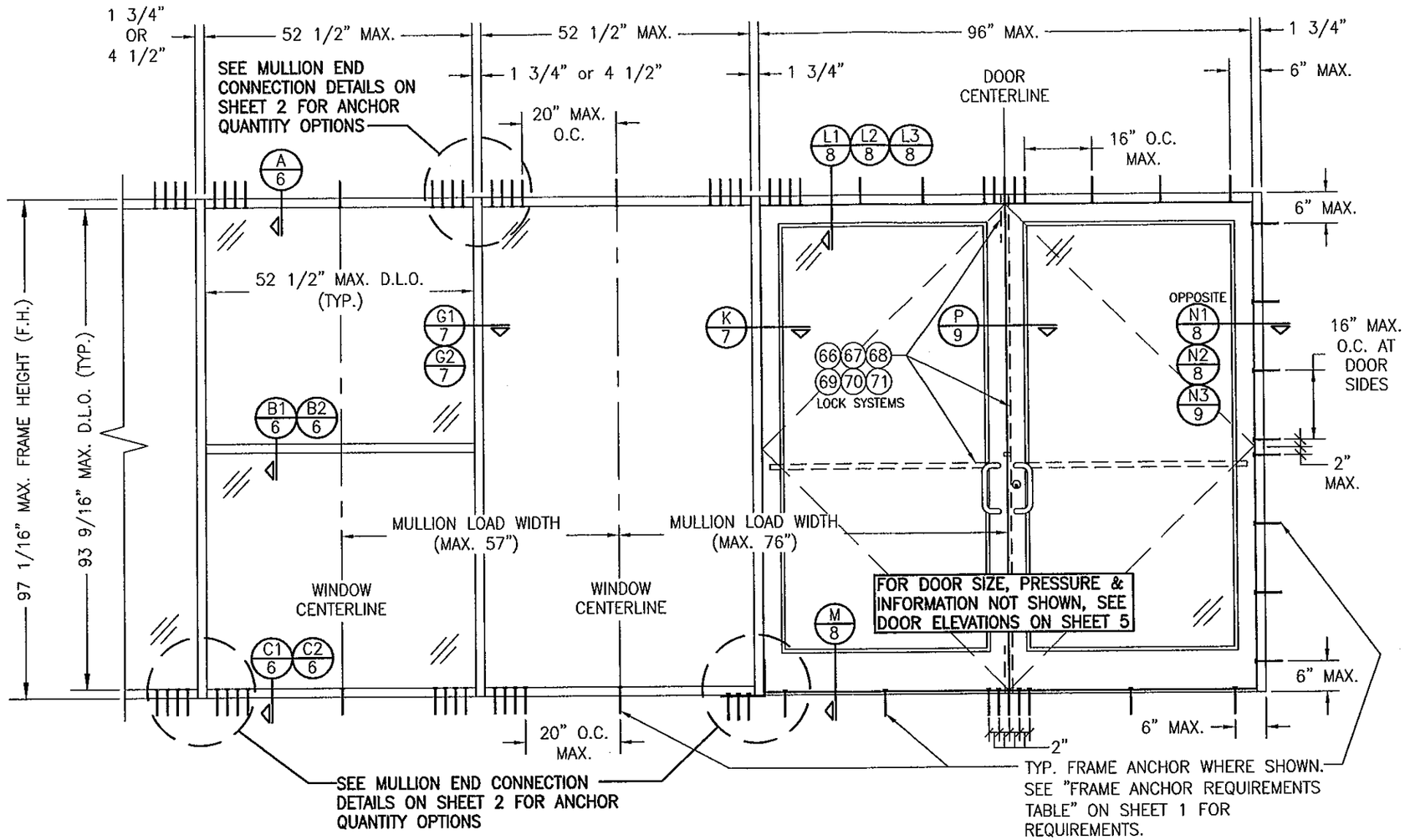

EXTERIOR ELEVATION
STORE FRONT ASSEMBLY WITH DOORS & NO TRANSOM

SCALE: 1/2"=1'-0"

NOTE: 1) FIXED PANELS MAY BE PLACED ON ONE OR BOTH SIDES OF DOORS.
2) DOORS MAY BE SINGLE OR DOUBLE DOORS.

ALLOWABLE DESIGN PRESSURE
SEE LOAD TABLES ON SHEET 5

(*) THE DOORS IN THIS STORE FRONT SYSTEM ARE NOT APPROVED FOR USE WHERE WATER INFILTRATION RESISTANCE IS REQUIRED BY THE DOOR. UNLESS UNITS ARE INSTALLED IN NON-HABITABLE AREAS WHERE THE UNIT & THE AREA ARE DESIGNED TO ACCEPT WATER INFILTRATION, UNITS SHALL BE INSTALLED ONLY AT LOCATIONS PROTECTED BY A CANOPY OR OVERHANG SUCH THAT THE ANGLE BETWEEN THE EDGE OF THE CANOPY OR OVERHANG TO SILL IS LESS THAN 45 DEGREES.

PRODUCT REVISED
as complying with the Florida
Building Code
Acceptance No. 11-1027.12
Expiration Date 4/20/17
By Shaq J. Chanda
Chief State Product Control

WARREN W. SCHAEFER ★ LICENSE No. 44135 ★ STATE OF FLORIDA ★ PROFESSIONAL ENGINEER

NO.	REVISION DESCRIPTION	BY	DATE

DRAWN BY: K.P.S.
CHECKED BY: W.W.S.
PLOT: 1=24
DATE: 09/06/05

DRAWING TITLE
TRIFAB 450 NON-IMPACT STORE FRONT & ENTRANCE WAY SYSTEM

MANUFACTURER
KAWNEER COMPANY, INC.
555 GUTHRIDGE COURT
NORCROSS, GA 30092
770-449-5555

CONSULTANTS
W. W. SCHAEFER ENGINEERING & CONSULTING, P.A. (CA 6809)
7480 150TH COURT NORTH
PALM BEACH GARDENS, FL 33418
PHONE: 561-744-3424

CERTIFICATION
OCT 11 2011
WARREN W. SCHAEFER, P.E.
P.E. NO. 44135

DRAWING NO. 1431
REV. B
SHEET NO. 3 OF 11

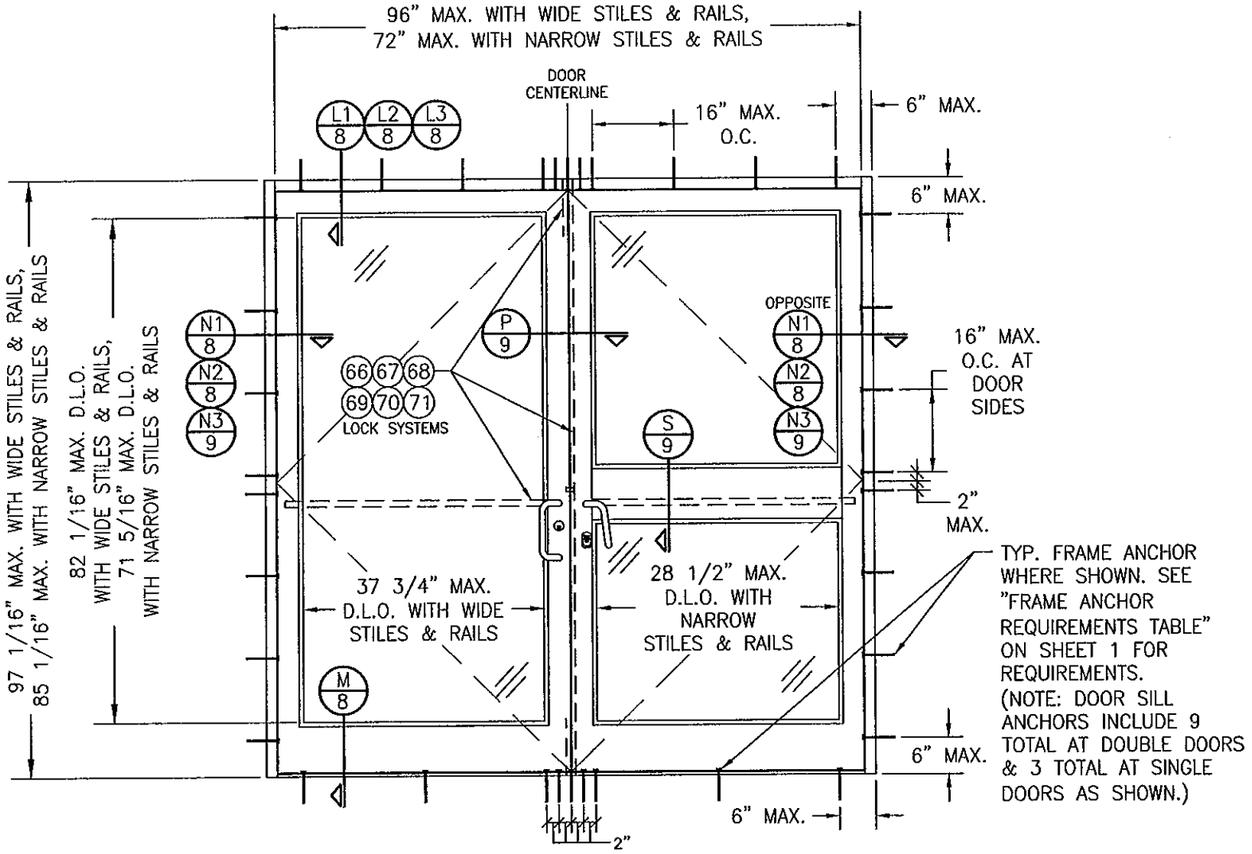

EXTERIOR ELEVATION
DOUBLE DOOR ASSEMBLY
SCALE: 1/2"=1'-0"

ALLOWABLE PRESSURE = +/-65 PSF

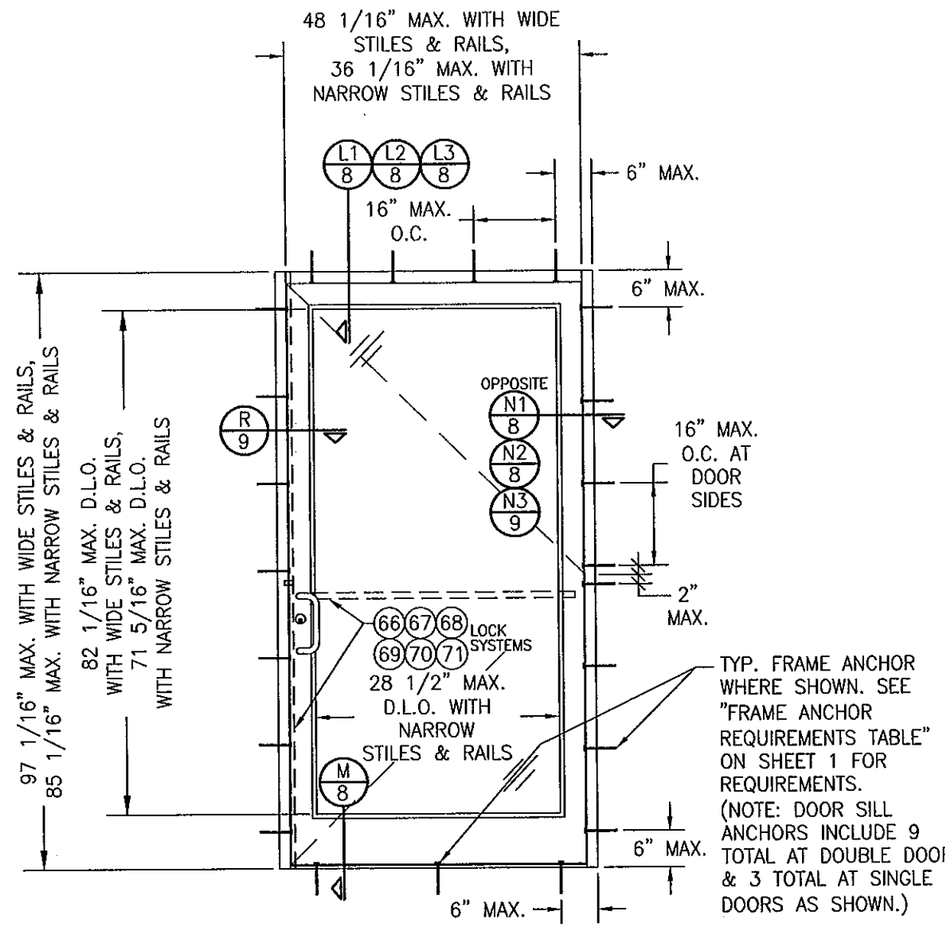

EXTERIOR ELEVATION
SINGLE DOOR ASSEMBLY
SCALE: 1/2"=1'-0"

ALLOWABLE PRESSURE = +/-65 PSF

PRODUCT REVISED
to complying with the Florida Building Code
Acceptance No 11-1027.12
Expiration Date 4/20/17
By Shaq J. Chaudhry
Manager Quality/Product Control

(*) THE DOORS IN THIS STORE FRONT SYSTEM ARE NOT APPROVED FOR USE WHERE WATER INFILTRATION RESISTANCE IS REQUIRED BY THE DOOR. UNLESS UNITS ARE INSTALLED IN NON-HABITABLE AREAS WHERE THE UNIT & THE AREA ARE DESIGNED TO ACCEPT WATER INFILTRATION, UNITS SHALL BE INSTALLED ONLY AT LOCATIONS PROTECTED BY A CANOPY OR OVERHANG SUCH THAT THE ANGLE BETWEEN THE EDGE OF THE CANOPY OR OVERHANG TO SILL IS LESS THAN 45 DEGREES.

WARREN W. SCHAEFER ★ LICENSE No. 44135 ★ STATE OF FLORIDA ★ PROFESSIONAL ENGINEER

DRAWN BY: K.P.S.	CHECKED BY: W.W.S.
PLOT: 1=24	DATE: 09/06/05

NO.	REVISION DESCRIPTION	BY	DATE

DRAWING TITLE
TRIFAB 450 NON-IMPACT STORE FRONT & ENTRANCE WAY SYSTEM

MANUFACTURER
KAWNEER COMPANY, INC.
555 GUTHRIDGE COURT
NORCROSS, GA 30092
770-449-5555

CONSULTANTS
W. W. SCHAEFER ENGINEERING & CONSULTING, P.A. (CA 6809)
7480 150TH COURT NORTH
PALM BEACH GARDENS, FL 33418
PHONE: 561-744-3424

CERTIFICATION
OCT 11 2011
WARREN W. SCHAEFER, P.E.
P.E. NO. 44135

DRAWING NO. 1431
REV. B
SHEET NO. 4 OF 11

VERTICAL MULLION LOAD TABLE (MULLION "A")

UNREINFORCED FIXED PANEL VERTICAL MULLION

MAXIMUM MULLION SPAN (IN.)	MAXIMUM LOAD WIDTH (IN.)	ALLOWABLE PRESSURE (+/- PSF) CONNECTION "A" (PSF)	CONNECTION "B" (PSF)	CONNECTION "C" (PSF)
86	57	42.1	47.6	47.6
	51	47.0	53.2	53.2
	45	53.3	60.3	60.3
	39	61.5	65.0	65.0
	33	65.0	65.0	65.0
80	57	45.2	59.1	59.1
	51	50.5	65.0	65.0
	45	57.3	65.0	65.0
	39	65.0	65.0	65.0
74	57	48.9	65.0	65.0
	51	54.6	65.0	65.0
	45	61.9	65.0	65.0
68	57	53.2	65.0	65.0
	51	59.5	65.0	65.0
	45	65.0	65.0	65.0
62	57	58.3	65.0	65.0
	51	65.0	65.0	65.0
56	57	64.6	65.0	65.0

VERTICAL MULLION LOAD TABLE (MULLION "B")

FIXED PANEL VERTICAL MULLION REINFORCED WITH SINGLE CHANNEL

MAXIMUM MULLION SPAN (IN.)	MAXIMUM LOAD WIDTH (IN.)	ALLOWABLE PRESSURE (+/- PSF) CONNECTION "A" (PSF)	CONNECTION "B" (PSF)	CONNECTION "C" (PSF)
120	57	30.1	61.9	65.0
	51	33.7	65.0	65.0
	45	38.2	65.0	65.0
	39	44.1	65.0	65.0
	33	52.1	65.0	65.0
	27	63.6	65.0	65.0
	21	65.0	65.0	65.0
108	57	33.5	65.0	65.0
	51	37.4	65.0	65.0
	45	42.4	65.0	65.0
	39	49.0	65.0	65.0
	33	57.9	65.0	65.0
	27	65.0	65.0	65.0
98	57	36.9	65.0	65.0
	51	41.3	65.0	65.0
	45	46.8	65.0	65.0
	39	54.0	65.0	65.0
	33	63.8	65.0	65.0
	27	65.0	65.0	65.0
86	57	42.1	65.0	65.0
	51	47.0	65.0	65.0
	45	53.3	65.0	65.0
	39	61.5	65.0	65.0
	33	65.0	65.0	65.0
80	57	45.2	65.0	65.0
	51	50.5	65.0	65.0
	45	57.3	65.0	65.0
	39	65.0	65.0	65.0
74	57	48.9	65.0	65.0
	51	54.6	65.0	65.0
	45	61.9	65.0	65.0
	39	65.0	65.0	65.0
68	57	53.2	65.0	65.0
	51	59.5	65.0	65.0
	45	61.9	65.0	65.0
62	57	58.3	65.0	65.0
	51	65.0	65.0	65.0
56	57	64.6	65.0	65.0

VERTICAL MULLION LOAD TABLE (MULLION "C")

DOOR JAMB VERTICAL MULLION REINFORCED WITH SINGLE CHANNEL

MAXIMUM MULLION SPAN (IN.)	MAXIMUM LOAD WIDTH (IN.)	ALLOWABLE PRESSURE (+/- PSF) CONNECTION "A" (PSF)	CONNECTION "B" (PSF)	CONNECTION "C" (PSF)
98	76	27.7	56.8	59.9
	72	29.2	60.0	63.2
	66	31.9	65.0	65.0
	60	35.1	65.0	65.0
	54	39.0	65.0	65.0
	48	43.8	65.0	65.0
	42	50.1	65.0	65.0
	36	58.4	65.0	65.0
	30	65.0	65.0	65.0
86	76	31.5	64.8	65.0
	72	33.3	65.0	65.0
	66	36.3	65.0	65.0
	60	40.0	65.0	65.0
	54	44.4	65.0	65.0
	48	50.0	65.0	65.0
	42	57.1	65.0	65.0
	36	65.0	65.0	65.0
82	76	33.1	65.0	65.0
	72	34.9	65.0	65.0
	66	38.1	65.0	65.0
	60	41.9	65.0	65.0
	54	46.6	65.0	65.0
	48	52.4	65.0	65.0
	42	59.9	65.0	65.0
	36	65.0	65.0	65.0
74	57	48.9	65.0	65.0
	51	54.6	65.0	65.0
	45	61.9	65.0	65.0
	39	65.0	65.0	65.0
68	57	53.2	65.0	65.0
	51	59.5	65.0	65.0
	45	65.0	65.0	65.0
62	57	58.3	65.0	65.0
	51	65.0	65.0	65.0
56	57	64.6	65.0	65.0

VERTICAL MULLION LOAD TABLE (MULLION "D")

DOOR JAMB VERTICAL MULLION REINFORCED WITH TWO CHANNELS

MAXIMUM MULLION SPAN (IN.)	MAXIMUM LOAD WIDTH (IN.)	ALLOWABLE PRESSURE (+/- PSF) CONNECTION "A" (PSF)	CONNECTION "B" (PSF)	CONNECTION "C" (PSF)
120	76	22.6	46.4	52.2
	72	23.9	49.0	55.1
	66	26.0	53.5	60.1
	60	28.6	58.8	65.0
	54	31.8	65.0	65.0
	48	35.8	65.0	65.0
	42	40.9	65.0	65.0
	36	47.7	65.0	65.0
	30	57.3	65.0	65.0
	24	65.0	65.0	65.0
108	76	25.1	51.6	58.0
	72	26.5	54.4	61.2
	66	28.9	59.4	65.0
	60	31.8	65.0	65.0
	54	35.4	65.0	65.0
	48	39.8	65.0	65.0
	42	45.5	65.0	65.0
	36	53.0	65.0	65.0
	30	63.6	65.0	65.0
	24	65.0	65.0	65.0
98	76	27.7	56.8	63.9
	72	29.2	60.0	65.0
	66	31.9	65.0	65.0
	60	35.1	65.0	65.0
	54	39.0	65.0	65.0
	48	43.8	65.0	65.0
	42	50.1	65.0	65.0
	36	58.4	65.0	65.0
	30	65.0	65.0	65.0
86	76	31.5	64.8	65.0
	72	33.3	65.0	65.0
	66	36.3	65.0	65.0
	60	40.0	65.0	65.0
	54	44.4	65.0	65.0
	48	50.0	65.0	65.0
	42	57.1	65.0	65.0
	36	65.0	65.0	65.0
82	76	33.1	65.0	65.0
	72	34.9	65.0	65.0
	66	38.1	65.0	65.0
	60	41.9	65.0	65.0
	54	46.6	65.0	65.0
	48	52.4	65.0	65.0
	42	59.9	65.0	65.0
	36	65.0	65.0	65.0

GLASS LOAD TABLE

DAY LIGHT OPENING (D.L.O.) MAXIMUM LONG SIDE (IN.)	MAXIMUM SHORT SIDE (IN.)	ALLOWABLE PRESSURE (+/- PSF)
GLASS OPTION 1		
96.0	34.0	65.0
93.5	52.5	65.0
GLASS OPTION 2		
96.0	34.0	65.0
93.5	38.5	65.0
87.0	41.5	65.0
81.0	44.5	65.0
75.0	48.0	65.0
69.0	52.5	65.0
GLASS OPTION 3		
93.5	18.0	65.0
87.0	19.5	65.0
81.0	21.0	65.0
75.0	23.0	65.0
69.0	25.0	65.0
63.0	27.0	65.0
57.0	30.0	65.0
46.0	37.0	65.0
43.0	40.0	65.0

GLASS OPTION 1: 1/4" TEMPERED PANES
GLASS OPTION 2: 1/4" H.S. PANES
GLASS OPTION 3: 1/4" AN. PANES

NOTE: GLASS SHALL MEET ALL REQUIREMENTS OF CHAPTER 24 OF THE FLORIDA BUILDING CODE (FBC) INCLUDING ALL APPLICABLE SAFETY REQUIREMENTS.

PRODUCT REVISED
as complying with the Florida Building Code
Acceptance No. 11-1027.12
Expiration Date 4/12/11-7
By Cheryl L. Chanda
Miami-Dade Product Control

MULLION "A" = VERTICAL MULLION BETWEEN FIXED PANELS WITH NO REINFORCEMENT
MULLION "B" = VERTICAL MULLION BETWEEN FIXED PANELS WITH ONE(1) CONTINUOUS STEEL CHANNEL FOR REINFORCEMENT
MULLION "C" = VERTICAL MULLION BETWEEN DOORS AND FIXED PANELS WITH ONE(1) CONTINUOUS STEEL CHANNEL FOR REINFORCEMENT.
MULLION "D" = VERTICAL MULLION BETWEEN DOORS AND FIXED PANLES WITH TWO(2) CONTINUOUS STEEL CHANNELS FOR REINFORCEMENT.

LOAD TABLE NOTES:
1. THE LESSER OF THE LOADS DETERMINED FROM THE MULLION LOAD TABLES AND THE GLASS LOAD TABLE SHALL CONTROL FOR THE ASSEMBLED UNIT.
2. ALL LOADS IN THE GLASS LOAD TABLE ARE AS RESTRICTED BY TESTING AND THE CURRENT ASTM E1300 STANDARD.
3. ALL LOADS IN THE MULLION LOAD TABLES HAVE BEEN DETERMINED BASED ON THE WEAKEST CONDITION OF USING THE 1 3/4" WIDE FRAMING MEMBERS. IT IS POSSIBLE THAT THE ALLOWABLE LOADS MAY INCREASE WITH USE OF THE 4 1/2" WIDE FRAMING MEMBERS, BUT CONSIDERATION OF THIS INCREASE IS NOT APPLICABLE TO THIS APPROVAL. INCREASE IN MULLION LOADS DUE TO USE OF THE 4 1/2" FRAMING MEMBERS SHALL BE REVIEWED AND CERTIFIED BY A FLORIDA LICENSED ENGINEER UNDER A JOB SPECIFIC APPROVAL.

WARREN W. SCHAEFER LICENSE No. 44135 STATE OF FLORIDA PROFESSIONAL ENGINEER

DRAWN BY: K.P.S.	CHECKED BY: W.W.S.
PLOT: 1=1	DATE: 09/06/05

NO.	REVISION DESCRIPTION	BY	DATE

DRAWING TITLE
TRIFAB 450 NON-IMPACT STORE FRONT & ENTRANCE WAY SYSTEM

MANUFACTURER
KAWNEER COMPANY, INC.
555 GUTHRIDGE COURT
NORCROSS, GA 30092
770-449-5555

CONSULTANTS
W. W. SCHAEFER ENGINEERING & CONSULTING, P.A. (CA 6809)
7480 150TH COURT NORTH
PALM BEACH GARDENS, FL 33418
PHONE: 561-744-3424

CERTIFICATION
OCT 11 2011
WARREN W. SCHAEFER P.E.
P.E. NO. 44135

DRAWING NO. 1431
REV. B
SHEET NO. 5 OF 11

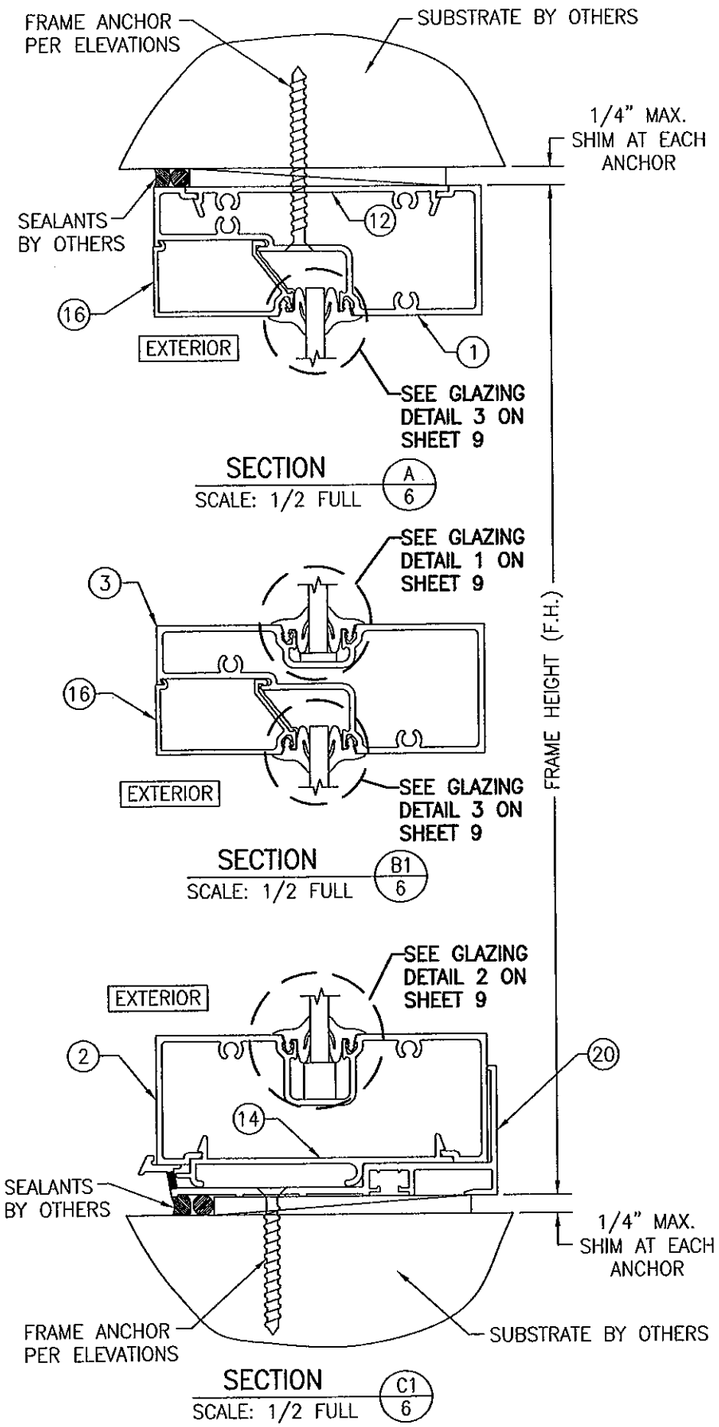

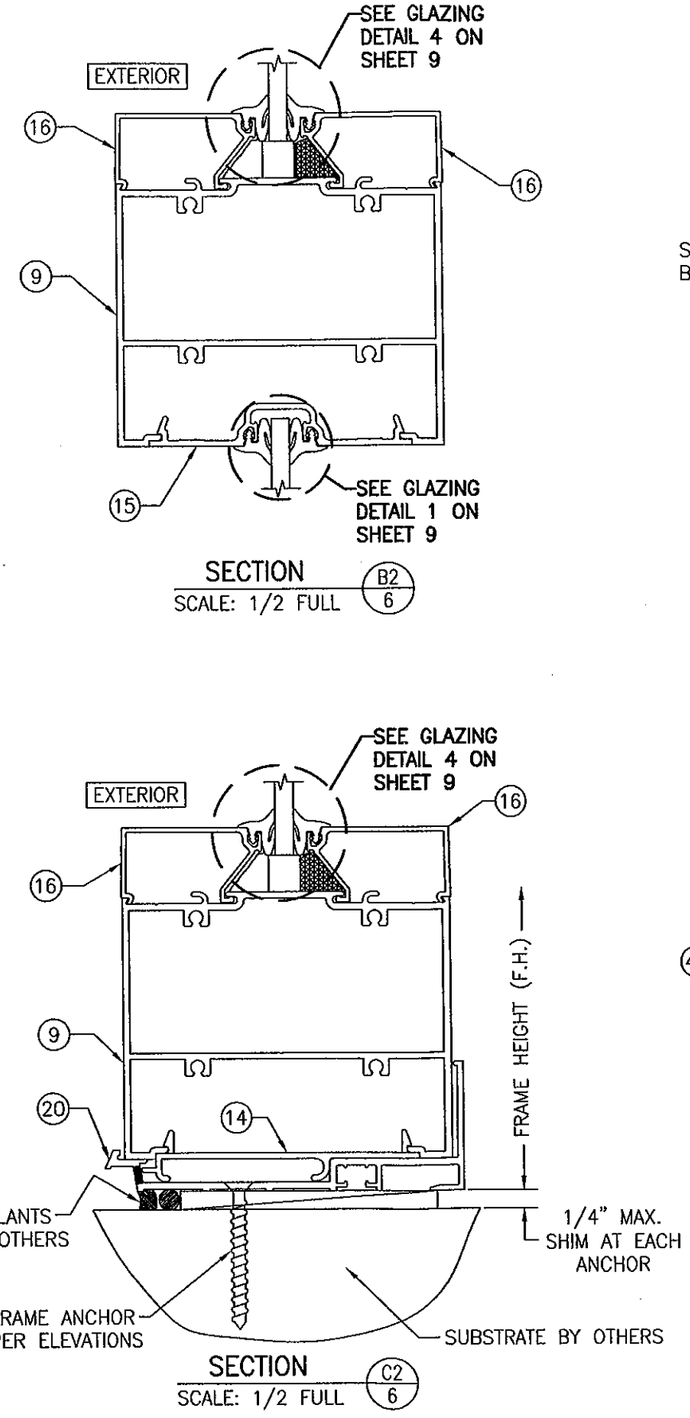

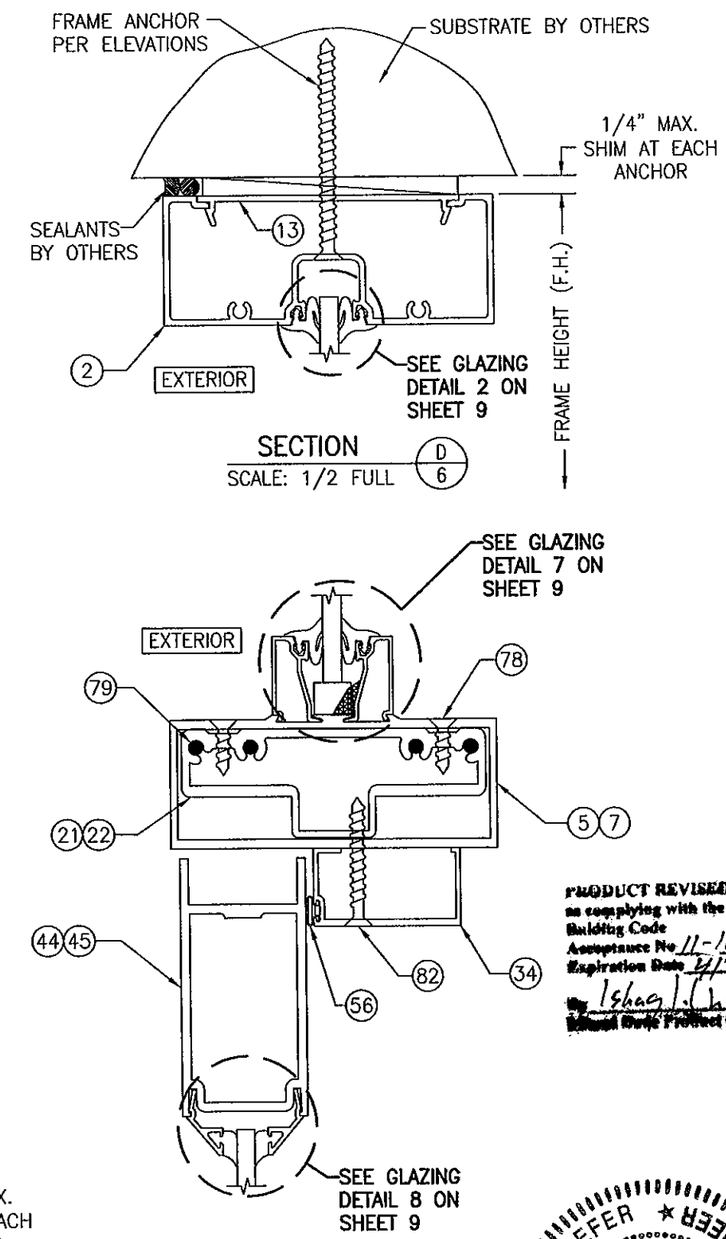

PRODUCT REVISED
as complying with the Florida Building Code
Acceptance No. 11-1027.12
Expiration Date 4/20/17
By Ishaq I. Chanda
Product Approval Program Manager

WARREN W. SCHAEFER ★ LICENSE No. 44135 ★ STATE OF FLORIDA ★ PROFESSIONAL ENGINEER

NO.	REVISION DESCRIPTION	BY	DATE

DRAWN BY: K.P.S. | CHECKED BY: W.W.S.
PLOT: 1=2 | DATE: 09/06/05

DRAWING TITLE
TRIFAB 450 NON-IMPACT STORE FRONT & ENTRANCE WAY SYSTEM

MANUFACTURER
KAWNEER COMPANY, INC.
555 GUTHRIDGE COURT
NORCROSS, GA 30092
770-449-5555

CONSULTANTS
W. W. SCHAEFER ENGINEERING & CONSULTING, P.A. (CA 6809)
7480 150TH COURT NORTH
PALM BEACH GARDENS, FL 33418
PHONE: 561-744-3424

CERTIFICATION
OCT 11 2011
WARREN W. SCHAEFER, P.E.
P.E. NO. 44135

DRAWING NO. 1431 | REV. B
SHEET NO. 6 OF 11

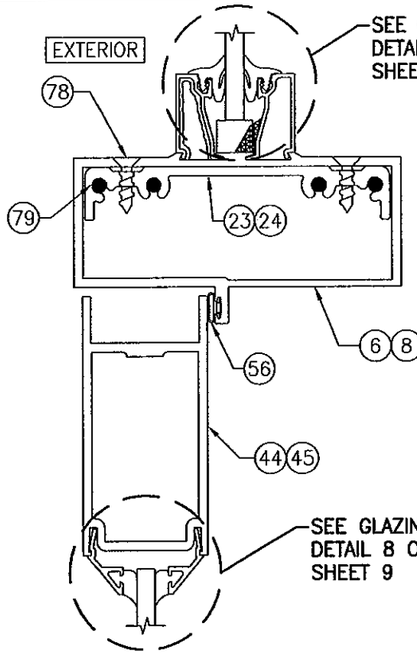

SECTION E2/7
SCALE: 1/2 FULL

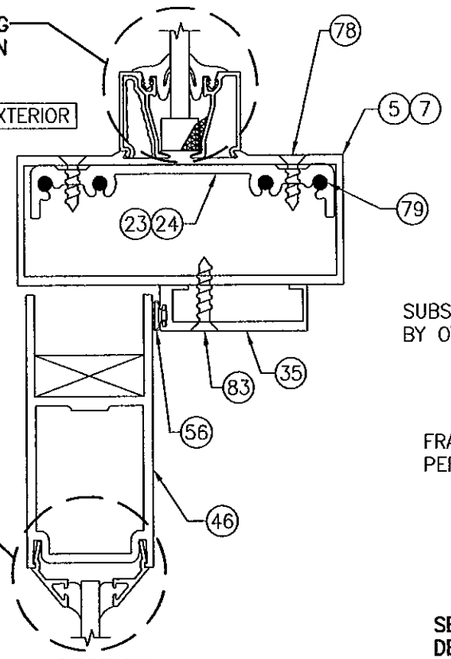

SECTION E3/7
SCALE: 1/2 FULL

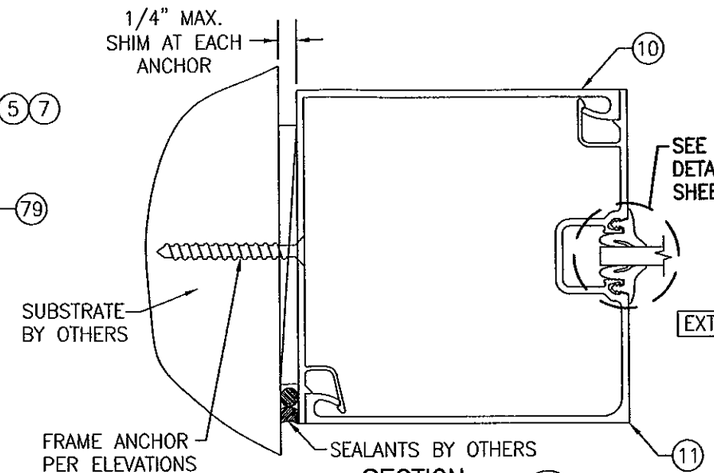

SECTION F2/7
SCALE: 1/2 FULL

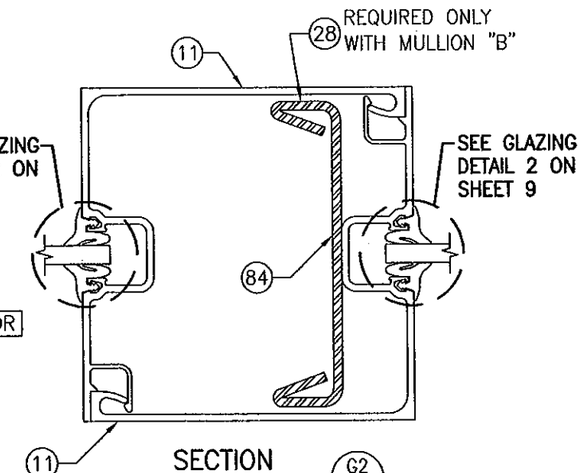

SECTION G2/7
SCALE: 1/2 FULL

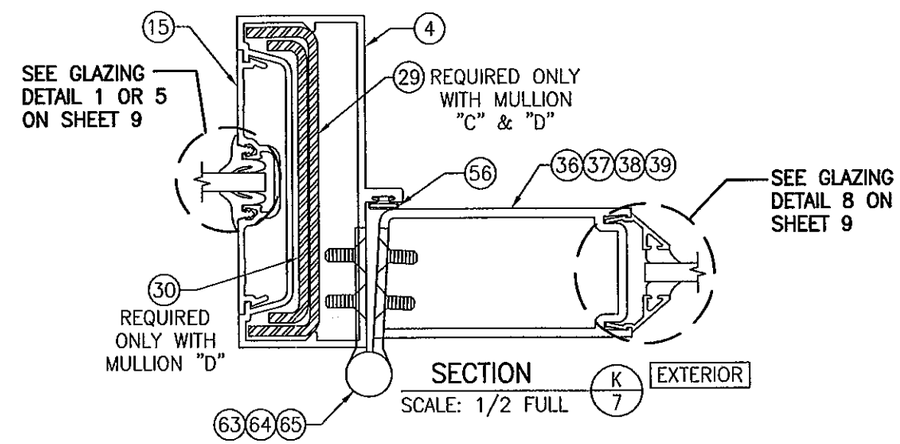

SECTION K/7
SCALE: 1/2 FULL

PRODUCT REVISED
as complying with the Florida Building Code
Acceptance No. 11-1027.12
Expiration Date 4/20/17
By Craig L. Chandler
Miami Dade Product Control

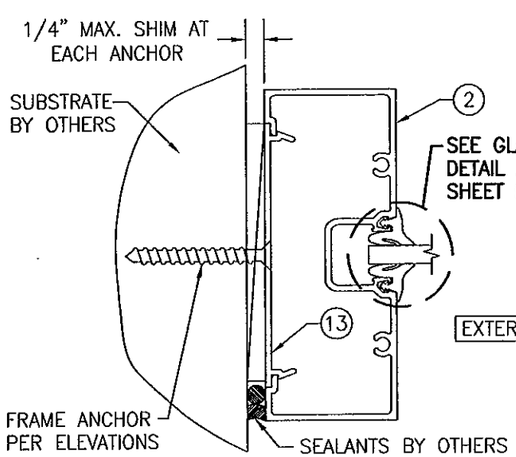

SECTION F1/7
SCALE: 1/2 FULL

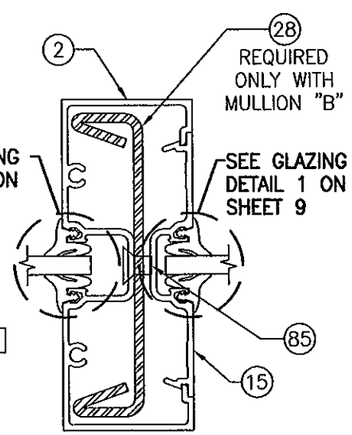

SECTION G1/7
SCALE: 1/2 FULL

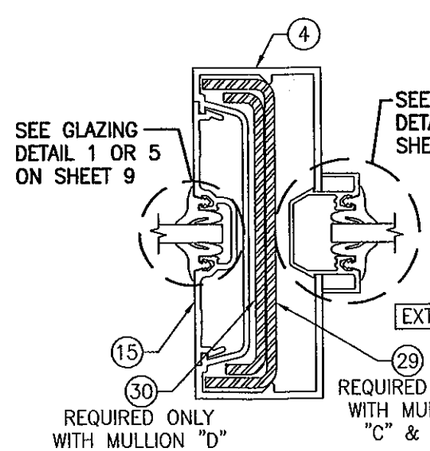

SECTION H/7
SCALE: 1/2 FULL

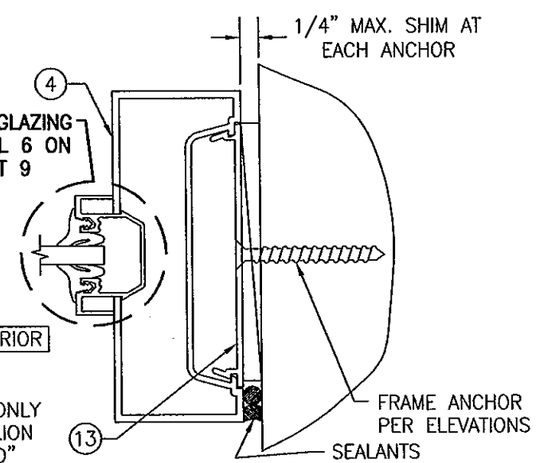

SECTION J/7
SCALE: 1/2 FULL

WARREN W. SCHAEFER ★ ENGINEER ★ LICENSE No. 44135 ★ STATE OF FLORIDA ★ PROFESSIONAL ENGINEER

NO.	REVISION DESCRIPTION	BY	DATE

DRAWN BY: K.P.S. | CHECKED BY: W.W.S.
PLOT: 1=2 | DATE: 09/06/05

DRAWING TITLE
TRIFAB 450 NON-IMPACT STORE FRONT & ENTRANCE WAY SYSTEM

MANUFACTURER
KAWNEER COMPANY, INC.
555 GUTHRIDGE COURT
NORCROSS, GA 30092
770-449-5555

CONSULTANTS
W. W. SCHAEFER ENGINEERING & CONSULTING, P.A. (CA 6809)
7480 150TH COURT NORTH
PALM BEACH GARDENS, FL 33418
PHONE: 561-744-3424

CERTIFICATION
OCT 11 2011
WARREN W. SCHAEFER, P.E.
P.E. NO. 44135

DRAWING NO. 1431 | REV. B
SHEET NO. 7 OF 11

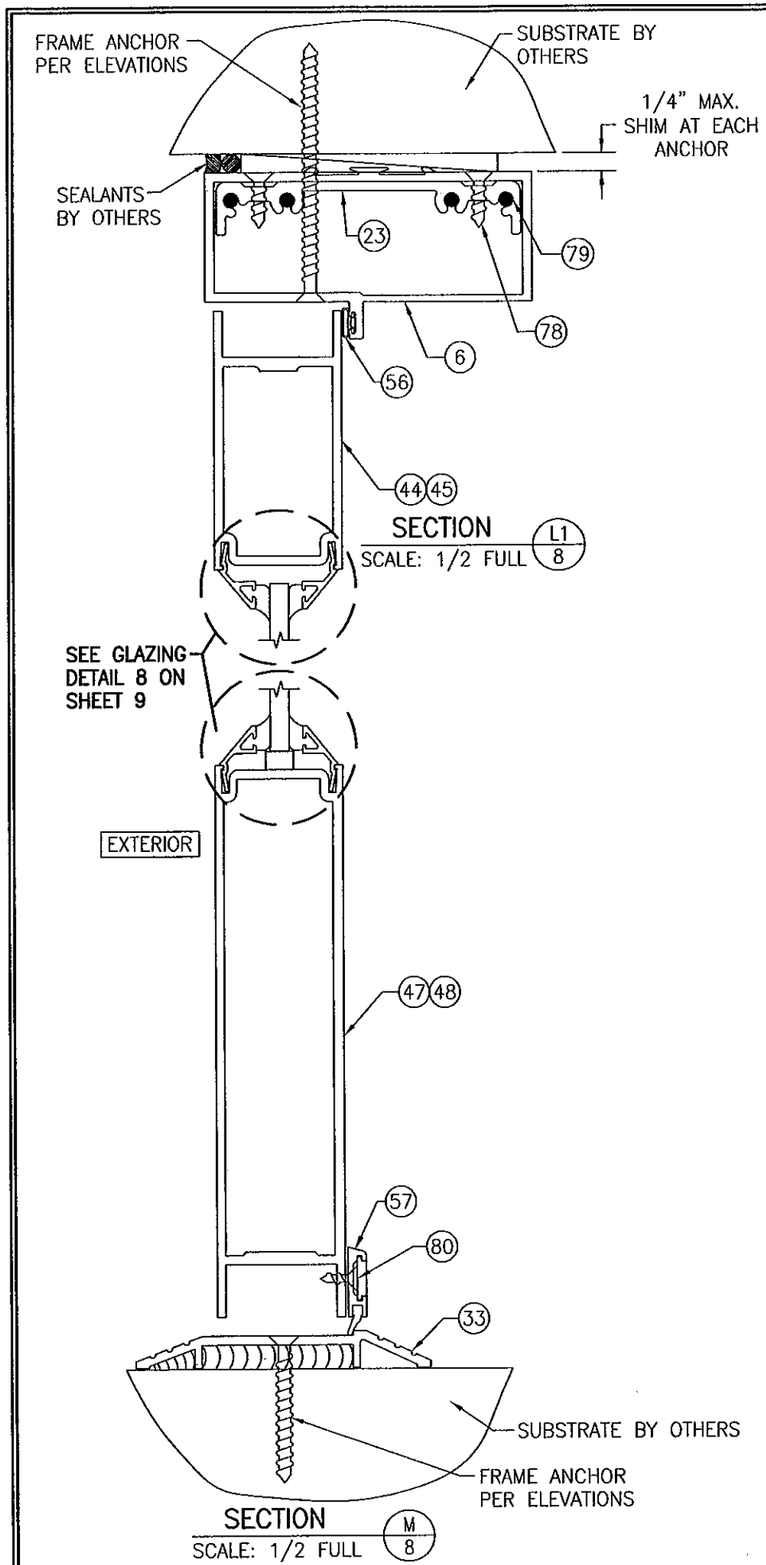

SECTION M/8
SCALE: 1/2 FULL

SECTION L1/8
SCALE: 1/2 FULL

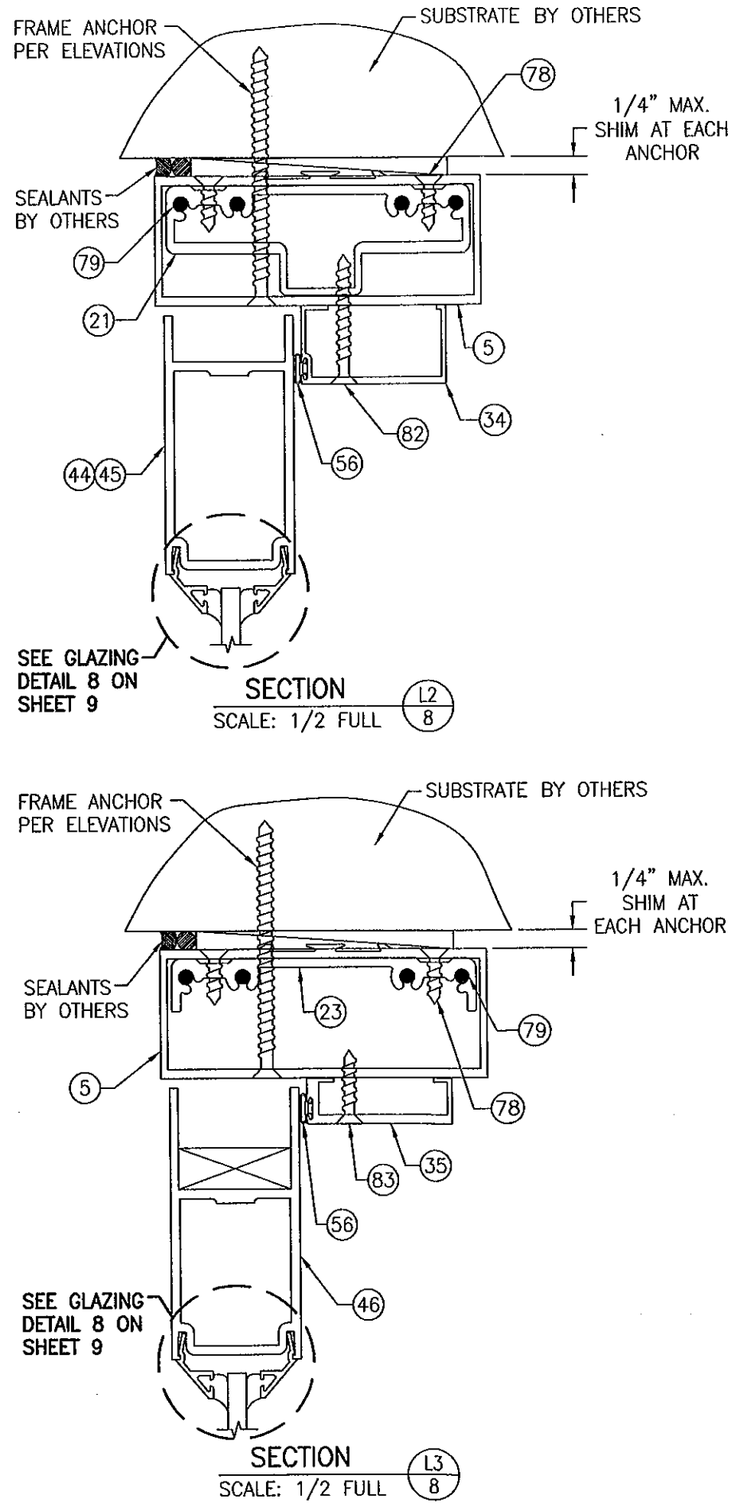

SECTION L2/8
SCALE: 1/2 FULL

SECTION L3/8
SCALE: 1/2 FULL

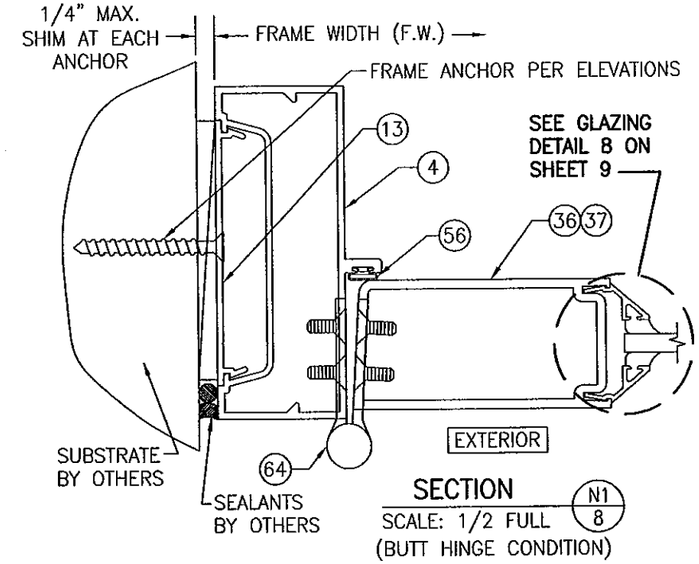

SECTION N1/8
SCALE: 1/2 FULL
(BUTT HINGE CONDITION)

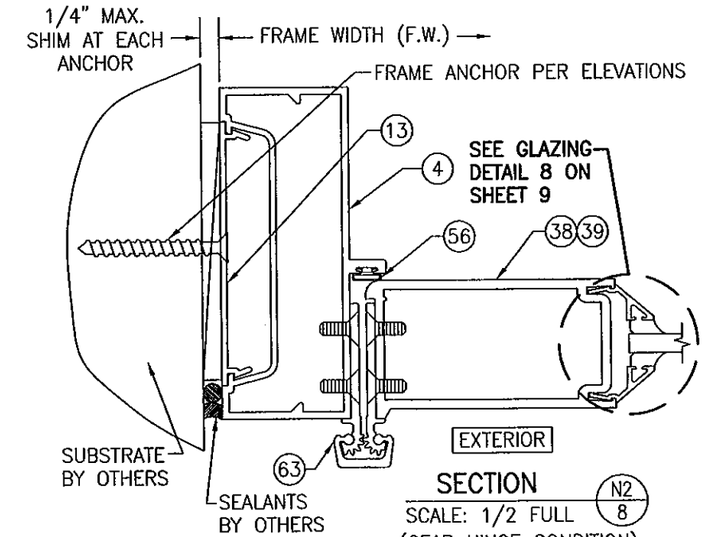

SECTION N2/8
SCALE: 1/2 FULL
(GEAR HINGE CONDITION)

PRODUCT REVISED
as complying with the Florida Building Code
Acceptance No. 11-1027.12
Expiration Date 4/20/17
By Ishaq I. Chanda
Manual Date/Product Control

WARREN W. SCHAEFER ★ LICENSE No. 44135 ★ STATE OF FLORIDA ★ PROFESSIONAL ENGINEER

NO.	REVISION DESCRIPTION	BY	DATE

DRAWN BY: K.P.S. | CHECKED BY: W.W.S.
PLOT: 1=2 | DATE: 09/06/05

DRAWING TITLE
TRIFAB 450 NON-IMPACT STORE FRONT & ENTRANCE WAY SYSTEM

MANUFACTURER
KAWNEER COMPANY, INC.
555 GUTHRIDGE COURT
NORCROSS, GA 30092
770-449-5555

CONSULTANTS
W. W. SCHAEFER ENGINEERING & CONSULTING, P.A. (CA 6809)
7480 150TH COURT NORTH
PALM BEACH GARDENS, FL 33418
PHONE: 561-744-3424

CERTIFICATION
OCT 11 2011
WARREN W. SCHAEFER, P.E.
P.E. NO. 44135

DRAWING NO. 1431 | REV. B
SHEET NO. 8 OF 11

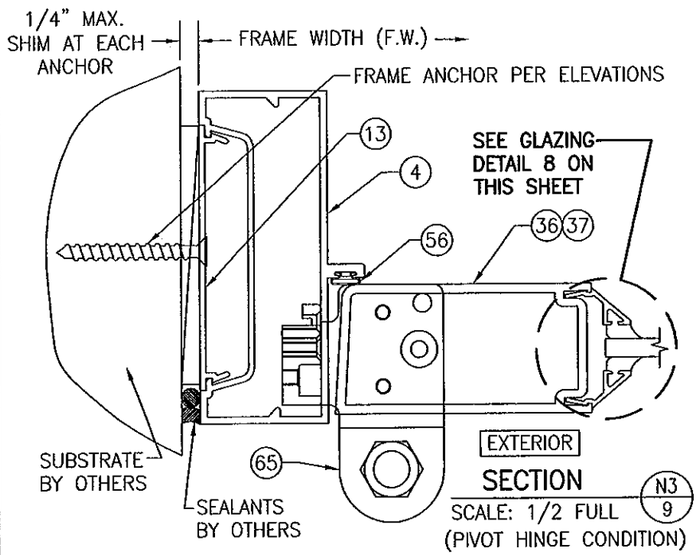

SECTION N3/9
SCALE: 1/2 FULL
(PIVOT HINGE CONDITION)

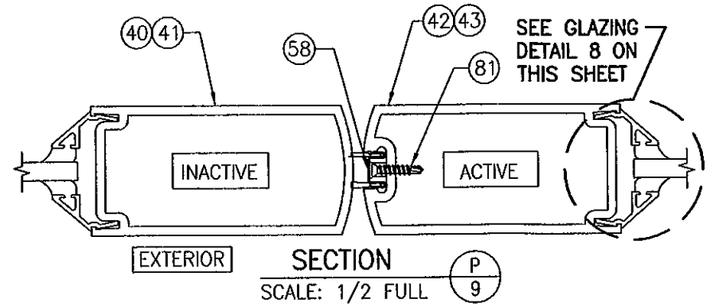

SECTION P/9
SCALE: 1/2 FULL

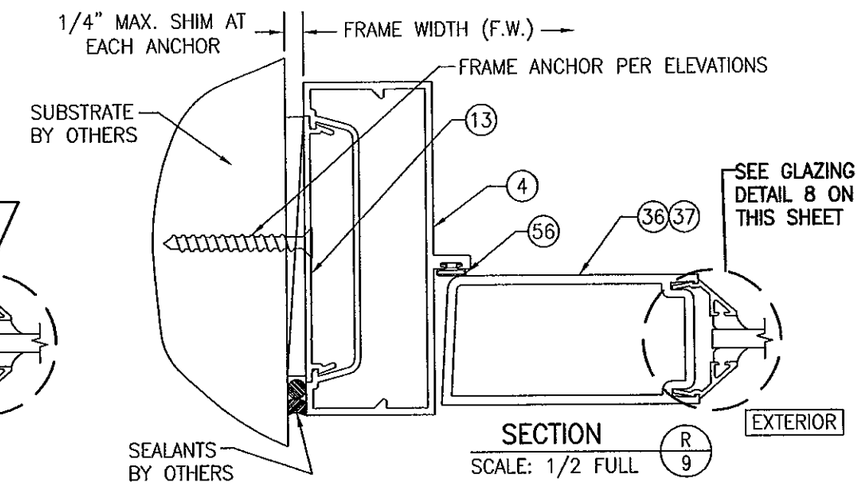

SECTION R/9
SCALE: 1/2 FULL

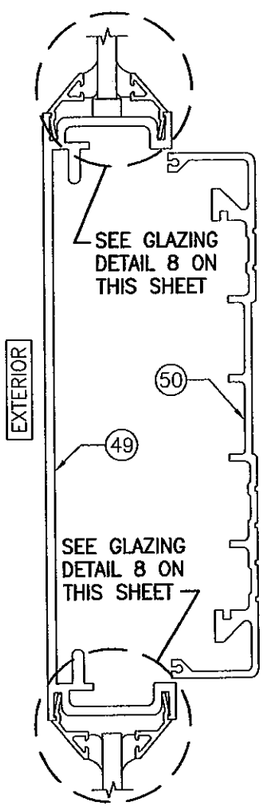

SECTION S/9
SCALE: 1/2 FULL

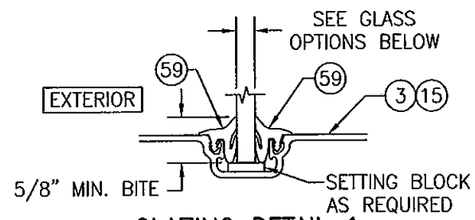

GLAZING DETAIL 1
SCALE: 1/2 FULL

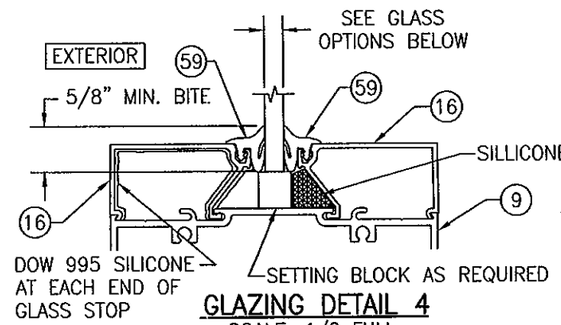

GLAZING DETAIL 4
SCALE: 1/2 FULL

PRODUCT REVISED
in complying with the Florida Building Code
Acceptance No. 11-1027.12
Expiration Date 4/20/17
By Ishaq I. Chanda
Manager Statewide Product Control

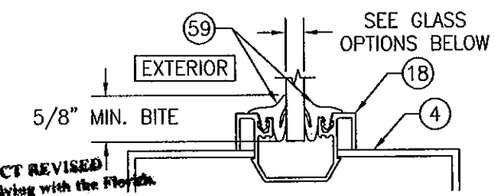

GLAZING DETAIL 6
SCALE: 1/2 FULL

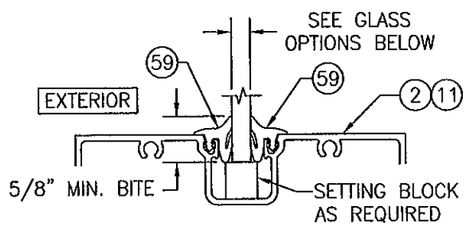

GLAZING DETAIL 2
SCALE: 1/2 FULL

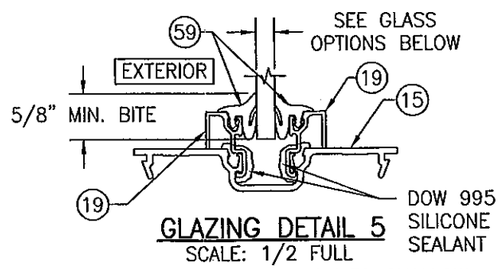

GLAZING DETAIL 5
SCALE: 1/2 FULL
USED ONLY AT SHALLOW TO SHALLOW POCKET GLAZING.

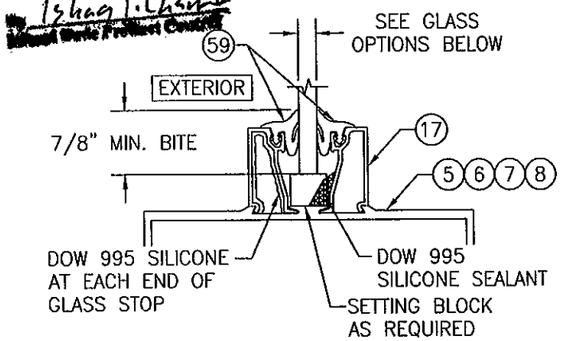

GLAZING DETAIL 7
SCALE: 1/2 FULL

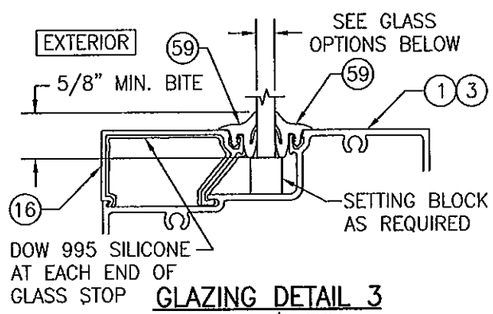

GLAZING DETAIL 3
SCALE: 1/2 FULL

FIXED PANEL GLASS OPTIONS
GLASS OPTION 1: 1/4" TEMPERED GLASS GLASS OPTION 2: 1/4" HEAT STRENGTHENED GLASS GLASS OPTION 3: 1/4" ANNEALED GLASS
SEE "GLASS LOAD TABLE" ON SHEET 5 FOR GLASS LOAD REQUIREMENTS.

NOTE: GLASS SHALL MEET ALL REQUIREMENTS OF CHAPTER 24 OF THE FLORIDA BUILDING CODE (FBC) INCLUDING ALL APPLICABLE SAFETY REQUIREMENTS.

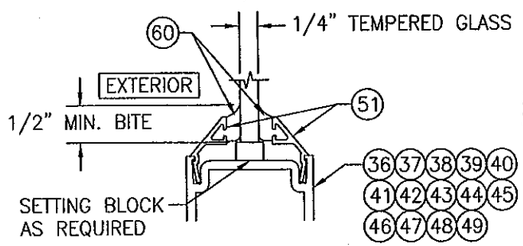

GLAZING DETAIL 8
SCALE: 1/2 FULL

DRAWN BY: K.P.S.	CHECKED BY: W.W.S.
PLOT: 1=2	DATE: 09/06/05

NO.	REVISION DESCRIPTION	BY	DATE

DRAWING TITLE
TRIFAB 450 NON-IMPACT STORE FRONT & ENTRANCE WAY SYSTEM

MANUFACTURER
KAWNEER COMPANY, INC.
555 GUTHRIDGE COURT
NORCROSS, GA 30092
770-449-5555

CONSULTANTS
W. SCHAEFER ENGINEERING & CONSULTING, P.A. (CA 6809)
7480 150TH COURT NORTH
PALM BEACH GARDENS, FL 33418
PHONE: 561-744-3424

WARREN W. SCHAEFER
LICENSE NO. 44130
STATE OF FLORIDA
PROFESSIONAL ENGINEER
OCT 11 2016

DRAWING NO. 1451
REV. B
SHEET NO. 9 OF 11

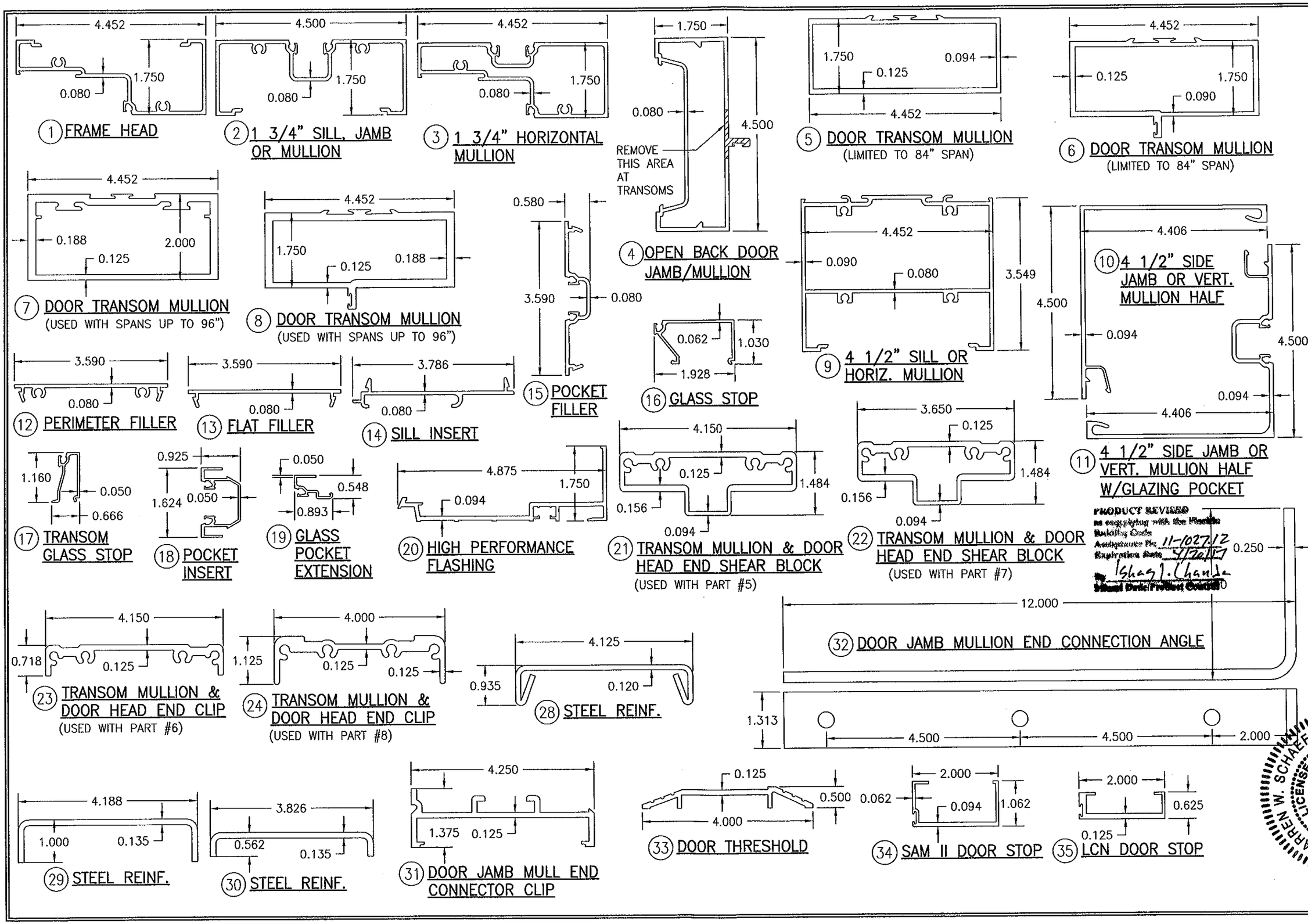

DRAWN BY: K.P.S.	CHECKED BY: W.W.S.
PLOT: 1=2	DATE: 09/06/05

NO.	REVISION DESCRIPTION	BY	DATE

DRAWING TITLE
TRIFAB 450 NON-IMPACT STORE FRONT & ENTRANCE WAY SYSTEM

MANUFACTURER
KAWNEER COMPANY, INC.
555 GUTHRIDGE COURT
NORCROSS, GA 30092
770-449-5555

CONSULTANTS
W. W. SCHAEFER ENGINEERING & CONSULTING, P.A. (CA 6809)
7480 150TH COURT NORTH
PALM BEACH GARDENS, FL 33418
PHONE: 561-744-3424

WARREN W. SCHAEFER LICENSE NO. 27015 STATE OF FLORIDA PROFESSIONAL ENGINEER

CERTIFICATION

DRAWING NO. 1431 REV. B

SHEET NO. 10 OF 11

ITEM #	PART #	ITEM DESCRIPTION	MANUFACTURER/NOTES
		PARTS	
1	450-CG-003	FRAME HEAD	6063-T6 ALUMINUM
2	450-CG-001	1 3/4" SILL, JAMB OR MULLION	6063-T6 ALUMINUM
3	450-CG-011	1 3/4" HORIZONTAL MULLION	6063-T6 ALUMINUM
4	575-053	OPEN BACK DOOR JAMB/MULLION	6063-T6 ALUMINUM
5	450-079	DOOR TRANSOM & TRANSOM MULLION	6063-T6 ALUMINUM (MULLION LIMITED TO 84" SPAN)
6	450-502	DOOR TRANSOM & TRANSOM MULLION	6063-T6 ALUMINUM (MULLION LIMITED TO 84" SPAN)
7	118-080	DOOR TRANSOM MULLION	6063-T6 ALUMINUM
8	450-075	DOOR TRANSOM MULLION	6063-T6 ALUMINUM
9	450-027	4 1/2" SILL OR HORIZ. MULLION	6063-T6 ALUMINUM
10	450-017	4 1/2" SIDE JAMB OR VERT. MULL HALF	6063-T6 ALUMINUM
11	450-CG-015	4 1/2" SIDE JAMB OR VERT. MULL HALF	6063-T6 ALUMINUM
12	451-CG-163	PERIMETER FILLER	6063-T6 ALUMINUM
13	450-126	FLAT FILLER SHIM SUPPORT	6063-T6 ALUMINUM
14	451-HP-126	SILL INSERT	6063-T6 ALUMINUM
15	450-CG-002	POCKET FILLER	6063-T6 ALUMINUM
16	450-CG-004	GLASS STOP	6063-T6 ALUMINUM
17	450-022	TRANSOM GLASS STOP	6063-T6 ALUMINUM
18	450-033	POCKET INSERT	6063-T6 ALUMINUM
19	575-056	GLASS POCKET EXTENSION	6063-T6 ALUMINUM
20	451-HP-037	HIGH PERFORMANCE FLASHING	6063-T6 ALUMINUM
21	450-548	TRANSOM MULL & DOOR HEAD END SHEAR BLOCK	6063-T6 ALUMINUM (USED WITH PART #5)
22	400-140/141	TRANSOM MULL & DOOR HEAD END SHEAR BLOCK	6063-T6 ALUMINUM (USED WITH PART #7)
23	450-506	TRANSOM MULL & DOOR HEAD END CLIP	6063-T6 ALUMINUM (USED WITH PART #6)
24	118-049	TRANSOM MULL & DOOR HEAD END CLIP	6063-T6 ALUMINUM (USED WITH PART #8)
28	450-110	FIXED PANEL VERT. MULL STEEL REINFORCEMENT	50 KSI STEEL
29	575-300	DOOR JAMB MULL STEEL REINFORCEMENT	50 KSI STEEL
30	575-301	DOOR JAMB MULL STEEL REINFORCEMENT	50 KSI STEEL
31	575-298	DOOR JAMB MULL END CONNECTOR CLIP	6063-T6 ALUMINUM
32	575-299	DOOR JAMB MULL BASE END CONNECTION ANGLE	50 KSI STEEL
33	069-139	DOOR THRESHOLD	6063-T6 ALUMINUM
34	041-045	SAM II DOOR STOP	6063-T6 ALUMINUM
35	069-214	LCN DOOR STOP	6063-T6 ALUMINUM
36	200-005	BEVELED DOOR STILE "350"	6063-T6 ALUMINUM
37	200-002	BEVELED DOOR STILE "190"	6063-T6 ALUMINUM
38	200-012	CONT. HINGE DOOR STILE "350"	6063-T6 ALUMINUM
39	200-011	CONT. HINGE DOOR STILE "190"	6063-T6 ALUMINUM
40	200-007	INACTIVE DOOR MEETING STILE "350"	6063-T6 ALUMINUM
41	200-004	INACTIVE DOOR MEETING STILE "190"	6063-T6 ALUMINUM
42	200-006	ACTIVE DOOR MEETING STILE "350"	6063-T6 ALUMINUM
43	200-003	ACTIVE DOOR MEETING STILE "190"	6063-T6 ALUMINUM
44	200-023	DOOR TOP RAIL "350"	6063-T6 ALUMINUM
45	200-020	DOOR TOP RAIL "190"	6063-T6 ALUMINUM
46	200-024	LCN DOOR TOP RAIL "350"	6063-T6 ALUMINUM
47	200-034	DOOR BOTTOM RAIL "350"	6063-T6 ALUMINUM
48	200-030	DOOR BOTTOM RAIL "190"	6063-T6 ALUMINUM
49	233-013	DOOR CROSS RAIL	6063-T6 ALUMINUM
50	033-105	CROSS RAIL COVER	6063-T6 ALUMINUM
51	200-041	DOOR GLASS STOP	6063-T6 ALUMINUM
		SEALS AND SEALANTS	
56	027-078	BULB WEATHERSTRIPPING	ALCRYN
57	200-795	DOOR BOTTOM SWEEP ASSEMBLY	VARIED
58	200-496	ASTRAGAL WEATHERSTRIPPING	VARIED
59	027-074	PUSH-ON GASKET	EPDM
60	027-563	DOOR WEATHERING	EPDM
		HARDWARE	
63	050-821	CONTINUOUS GEAR HINGE	BY HAGER/ROTON
64	037-232	BUTT HINGE (3 PER PANEL)	BY HAGER
65	050-322	TOP OFFSET PIVOT	BY KAWNEER
	050-331	INTERMEDIATE OFFSET PIVOT	BY KAWNEER
	050-326/327	RH/LH BOTTOM OFFSET PIVOT	BY KAWNEER
66	--	MS 1850 3-POINT LOCK	BY ADAMS-RITE (NOT APPLICABLE WITH 190 DOORS)
67	050-079	FLUSH BOLT LOCK	BY KAWNEER
68	--	CONSEALED ROD EXIT DEVICE	DOROMATIC 1690
69	--	CONSEALED ROD EXIT DEVICE	PANELINE CR90
70	--	CONSEALED ROD EXIT DEVICE	JACKSON 2086
71	--	CONSEALED ROD EXIT DEVICE	KAWNEER 1686
72	--	OVERHEAD CONCEALED DOOR CLOSER	BY KAWNEER OR LCN
73	--	SURFACE DOOR CLOSER	BY NORTON
74	C09 OR CPN	PUSH/PULL DEVICE	BY KAWNEER
		MISCELLANEOUS FASTENERS	
78	--	NO. 10 X 1 1/4" S.S. SCREW	2 PER CLIP
79	--	NO. 10 X 1/2" S.S. SCREW	4 PER CLIP
80	--	NO. 6 X 3/8" S.S. SCREW	7 PER DOOR SWEEP
81	--	NO. 6 X 3/4" SCREW	10 PER DOOR LEAF MAX.
82	--	NO. 10 X 1 5/8" S.S. SCREW	8 PER STOP
83	--	NO. 10 X 1" S.S. SCREW	5 PER STOP
84	--	1/4" X 5/8" S.S. SCREW	6" FROM ENDS & 12" MAX. O.C.
85	--	NO 10-24 X 3/8" S.S. SCREW	1 AT CENTER

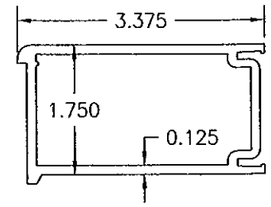

(38) CONTINUOUS HINGE DOOR STILE (350 WIDE STILE)

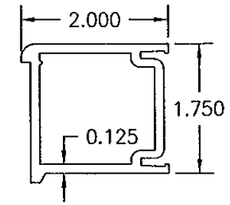

(39) CONTINUOUS HINGE DOOR STILE (190 NARROW STILE)

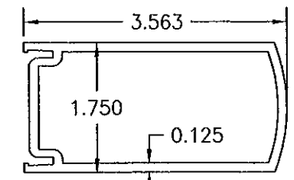

(40) INACTIVE DOOR MEETING STILE (350 WIDE STILE)

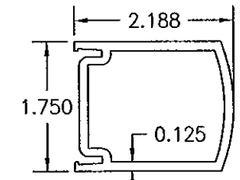

(41) INACTIVE DOOR MEETING STILE (190 NARROW STILE)

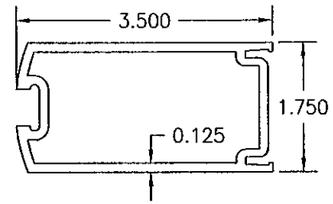

(42) ACTIVE DOOR MEETING STILE (350 WIDE STILE)

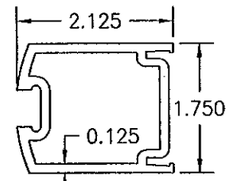

(43) ACTIVE DOOR MEETING STILE (190 NARROW STILE)

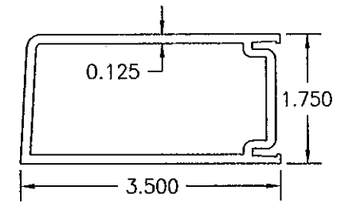

(36) BEVELED & PIVOT HINGE DOOR STILE (350 WIDE STILE)
(ALSO SINGLE DOOR LOCK STILE)

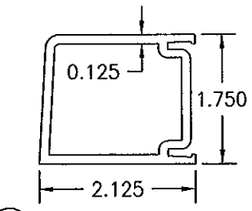

(37) BEVELED & PIVOT HINGE DOOR STILE (190 NARROW STILE)
(ALSO SINGLE DOOR LOCK STILE)

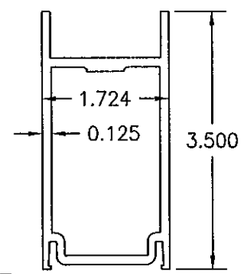

(44) DOOR TOP RAIL (350 WIDE STILE)

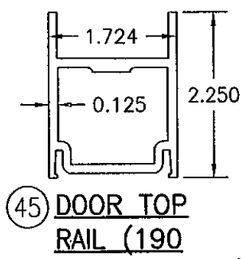

(45) DOOR TOP RAIL (190 NARROW STILE)

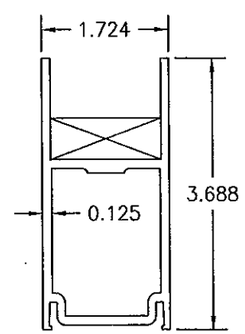

(46) LCN DOOR TOP RAIL (350 WIDE STILE)

PRODUCT REVISED
In complying with the Florida Building Code
Acceptance No. 11-1027.12
Expiration Date 04/20/2017
By Chang J. Chang
Manager Quality/Product Control

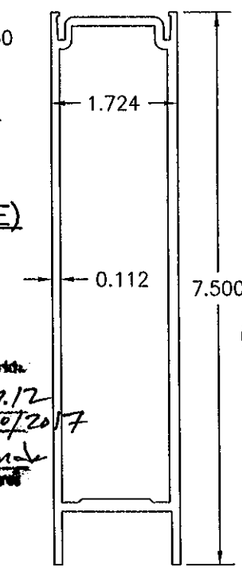

(47) DOOR BOTTOM RAIL (350 WIDE STILE)

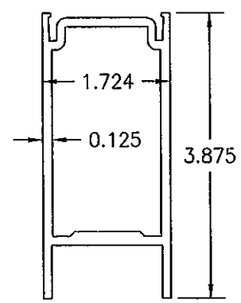

(48) DOOR BOTTOM RAIL (190 NARROW STILE)

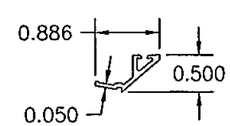

(51) DOOR GLASS STOP

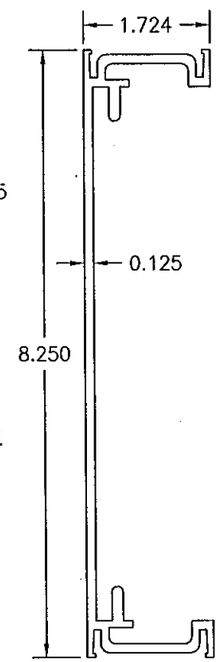

(49) DOOR CROSS RAIL

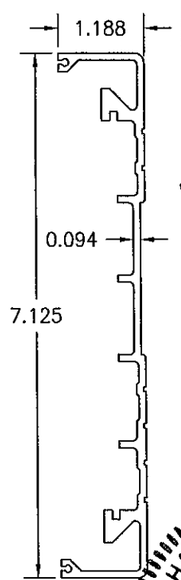

(50) CROSS RAIL COVER

DRAWN BY: K.P.S.	CHECKED BY: W.W.S.
PLOT: 1=2	DATE: 09/06/05

NO.	REVISION DESCRIPTION	BY	DATE
A1	CHANGED ITEM NUMBER 8 TO PART #450-075	W.W.S.	07/18/07

TRIFAB 450 NON-IMPACT STORE FRONT & ENTRANCE WAY SYSTEM

MANUFACTURER
KAWNEER COMPANY, INC.
555 GUTHRIDGE COURT
NORCROSS, GA 30092
770-449-5555

CONSULTANTS
W. W. SCHAEFER ENGINEERING & CONSULTING, P.A. (CA 6809)
7480 150TH COURT NORTH
PALM BEACH GARDENS, FL 33418
PHONE: 561-744-3424

WARREN W. SCHAEFER
No. 44135
STATE OF FLORIDA
PROFESSIONAL ENGINEER
OCT 11 2011

DRAWING NO.	REV.
1431	B

SHEET NO. 11 OF 11