MIAMI-DADE COUNTY
DEPARTMENT OF PERMITTING, ENVIRONMENT, AND REGULATORY AFFAIRS (PERA)
BOARD AND CODE ADMINISTRATION DIVISION

MIAMI-DADE COUNTY
PRODUCT CONTROL SECTION
11805 SW 26 Street, Room 208
Miami, Florida 33175-2474
T (786) 315-2590 F (786) 315-2599
www.miamidade.gov/pera/

NOTICE OF ACCEPTANCE (NOA)

CGI WINDOWS AND DOORS, INC.
10100 NW 25 Street
Miami, FL 33172

SCOPE:

This NOA is being issued under the applicable rules and regulations governing the use of construction materials. The documentation submitted has been reviewed and accepted by Miami-Dade County PERA -Product Control Section to be used in Miami Dade County and other areas where allowed by the Authority Having Jurisdiction (AHJ).

This NOA shall not be valid after the expiration date stated below. The Miami-Dade County Product Control Section (In Miami Dade County) and/or the AHJ (in areas other than Miami Dade County) reserve the right to have this product or material tested for quality assurance purposes. If this product or material fails to perform in the accepted manner, the manufacturer will incur the expense of such testing and the AHJ may immediately revoke, modify, or suspend the use of such product or material within their jurisdiction. PERA reserves the right to revoke this acceptance, if it is determined by Miami-Dade County Product Control Section that this product or material fails to meet the requirements of the applicable building code.
This product is approved as described herein, and has been designed to comply with the Florida Building Code, including the High Velocity Hurricane Zone.

DESCRIPTION: Series "Sentinel 150" Aluminum Sliding Glass Door w/ wo Reinforcements – L.M.I.

APPROVAL DOCUMENT: Drawing No. **W10–31 Rev D**, titled Series "150 Sentinel Aluminum Sliding Glass Door", sheets 1 through 16 of 16, prepared by Al–Farooq Corporation, dated 05/20/10 and last revised on OCT 10, 2011, signed and sealed and by Javad Ahmad, P. E., bearing the Miami–Dade County Product Control Revision stamp with the Notice of Acceptance number and Revision date by the Miami–Dade County Product Control Section.

MISSILE IMPACT RATING: Large and Small Missile Impact Resistant
Limitation: Max shim not to exceed ½" at head and ¾" at sill (w/ High strength poured & hardened grout).

LABELING: Each unit shall bear a permanent label with the manufacturer's name or logo, city, state and series and following statement: "Miami-Dade County Product Control Approved", unless otherwise noted herein.

RENEWAL of this NOA shall be considered after a renewal application has been filed and there has been no change in the applicable building code negatively affecting the performance of this product.

TERMINATION of this NOA will occur after the expiration date or if there has been a revision or change in the materials, use, and/or manufacture of the product or process. Misuse of this NOA as an endorsement of any product, for sales, advertising or any other purposes shall automatically terminate this NOA. Failure to comply with any section of this NOA shall be cause for termination and removal of NOA.

ADVERTISEMENT: The NOA number preceded by the words Miami-Dade County, Florida, and followed by the expiration date may be displayed in advertising literature. If any portion of the NOA is displayed, then it shall be done in its entirety.

INSPECTION: A copy of this entire NOA shall be provided to the user by the manufacturer or its distributors and shall be available for inspection at the job site at the request of the Building Official.
This NOA **revises NOA # 11-0303.02** and consists of this page 1 and evidence pages E-1, as well as approval document mentioned above.
The submitted documentation was reviewed by **Ishaq I. Chanda, P.E.**

MIAMI-DADE COUNTY APPROVED
12/12/11

NOTICE OF ACCEPTANCE: EVIDENCE SUBMITTED

A. DRAWINGS

1. Manufacturer's die drawings and sections. (transferred from file # **11-0303.02)**
2. Drawing No. **W10–31 REV D**, titled Series "150 Sentinel Aluminum Sliding Glass Door", sheets 1 through 16 of 16, prepared by Al–Farooq Corporation, dated 05/20/10 and last revised on OCT 10, 2011, signed and sealed and by Javad Ahmad, P. E.

Note: This revision consists of FBC 2010 changes only.

B. TESTS (transferred from file # **11-0303.02)**

1. Test reports on: 1) Air Infiltration Test, per FBC, TAS 202-94
   2) Uniform Static Air Pressure Test, Loading per FBC TAS 202-94
   3) Water Resistance Test, per FBC, TAS 202-94
   4) Large Missile Impact Test per FBC, TAS 201-94
   5) Cyclic Wind Pressure Loading per FBC, TAS 203-94
   6) Forced Entry Test, per FBC 2411 3.2.1, TAS 202-94

along with marked–up drawings and installation diagram of Alum SGD, prepared by Hurricane test Laboratory, LLC, Test Report No. **HTL–0080–1208–090**, dated July 30, 2010, signed and sealed by Vinu J. Abraham, P. E.

C. CALCULATIONS

1. Statement letter of conformance to FBC 2010, prepared by Al Farooq Corporation, dated OCT 06, 2011, signed and sealed by Javad Ahmad, P.E.
2. Anchor verification calculations and structural analysis, complying with FBC-2007, prepared by Al–Farooq Corporation, dated 03/03/11 and last revised on May 25, 2011, signed and sealed by Javad Ahmad, P.E.(transferred from file # **11-0303.02**).
3. Glazing complies w/ ASTME-1300-02 & -04

D. QUALITY ASSURANCE

1. Miami Dade Department of Permitting, Environment, and Regulatory Affairs (PERA).

E. MATERIAL CERTIFICATIONS

1. Notice of Acceptance No. **07-1116.04** issued to E.I. DuPont DeNemours & Co., Inc. for their "**DuPont Sentry Glass ® Plus**", expiring on 01/14/12.
2. Notice of Acceptance No. **1224.04** issued to Solutia Inc. for their "**Saflex Composites Interlayer w/ PET core**", expiring on 12/11/13.
3. Notice of Acceptance No. **11-0325.05,** issued to Solutia Inc. for their "**Saflex clear & color Interlayer**", expiring on 05/21/16.

F. STATEMENTS

1. Statement letter of conformance to FBC 2010 and "No financial interest", prepared by Al Farooq Corporation, dated OCT 06, 2011, signed and sealed by Javad Ahmad, P.E.
2. Statement letter of conformance to FBC 2007 and letter of no financial interest, prepared by Al Farooq Corporation, dated 03/01/11, signed and sealed by Javad Ahmad, P.E. (transferred from file # **11-0303.02**).
3. Lab Compliance statement, part of above referenced test report.

G. OTHER

1. This NOA **revises** NOA # **11-0303.02**, expiring on Sep. 22, 2015.
2. Test proposal # **09–1073**, approved on Nov. 05, 2009 and E-mail test proposal dated 07-19-2010, approved by BCCO.

Ishaq I. Chanda

Ishaq I. Chanda, P.E.
Product Control Examiner
NOA No 11-1031.05
Expiration Date: September 22, 2015
Approval Date: December 22, 2011

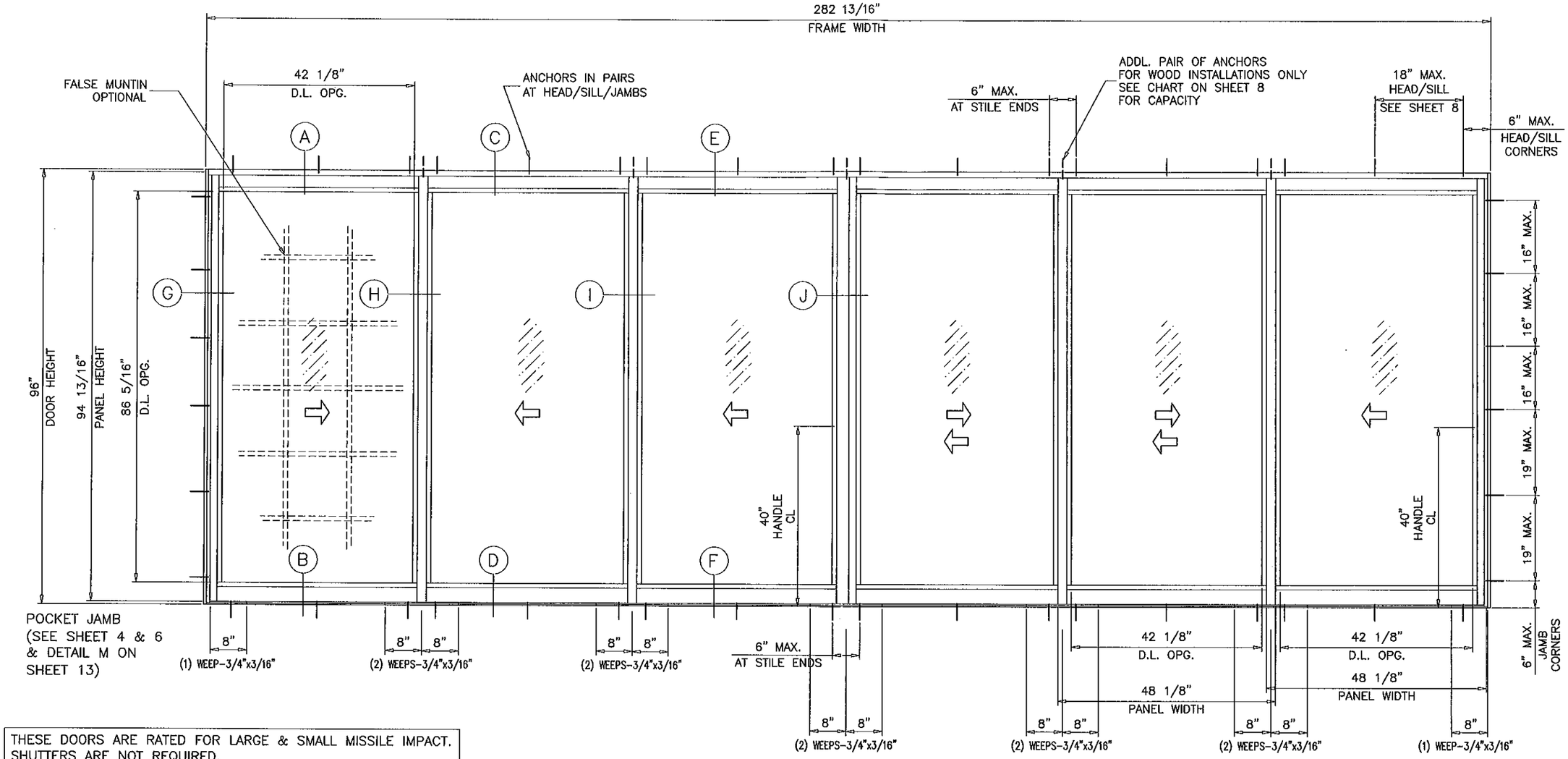

THESE DOORS ARE RATED FOR LARGE & SMALL MISSILE IMPACT. SHUTTERS ARE NOT REQUIRED.

TYPICAL ELEVATION

SERIES 150 SENTINEL ALUMINUM SLIDING GLASS DOOR

APPLICABLE EGRESS REQUIREMENTS PER FBC TO BE REVIEWED BY BUILDING OFFICIAL.

THIS PRODUCT HAS BEEN DESIGNED AND TESTED TO COMPLY WITH THE REQUIREMENTS OF THE FLORIDA BUILDING CODE 2010 EDITION INCLUDING HIGH VELOCITY HURRICANE ZONE (HVHZ).

1BY OR 2BY WOOD BUCKS BY OTHERS, MUST BE ANCHORED PROPERLY TO TRANSFER LOADS TO THE STRUCTURE.

ANCHORS SHALL BE AS LISTED, SPACED AS SHOWN ON DETAILS, ANCHORS EMBEDMENT TO BASE MATERIAL SHALL BE BEYOND WALL DRESSING OR STUCCO.

ANCHORING OR LOADING CONDITIONS NOT SHOWN IN THESE DETAILS ARE NOT PART OF THIS APPROVAL.

A LOAD DURATION INCREASE IS USED IN DESIGN OF ANCHORS INTO WOOD ONLY.

MATERIALS INCLUDING BUT NOT LIMITED TO STEEL/METAL SCREWS, THAT COME INTO CONTACT WITH OTHER DISSIMILAR MATERIALS SHALL MEET THE REQUIREMENTS OF 2007 FLORIDA BLDG. CODE SECTION 2003.8.4.

INSTRUCTIONS:

USE CHARTS AS FOLLOWS.

STEP 1 DETERMINE DESIGN WIND LOAD REQUIREMENT BASED ON WIND VELOCITY, BLDG. HEIGHT, WIND ZONE USING APPLICABLE ASCE 7 STANDARD.

STEP 2 DETERMINE DOOR CAPACITY FROM TABLES ON SHEET 7 FOR THE GLASS TYPE AND REINFORCING TO USE.

STEP 3 USING CHARTS ON SHEET 8 SELECT ANCHOR OPTION WITH DESIGN RATING MORE THAN DESIGN LOAD SPECIFIED IN STEP 1 ABOVE.

STEP 4 THE LOWEST VALUE RESULTING FROM STEPS 2 AND 3 SHALL APPLY TO ENTIRE SYSTEM.

PRODUCT REVISED
in complying with the Florida Building Code
Acceptance No. 11-1031.05
Expiration Date 9/22/2015
By Shaq L. Chandler
Miami-Dade Product Control

D.L. OPENING
D.L.O HEIGHT = DOOR HEIGHT – 9 11/16"
D.L.O. WIDTH = PANEL WIDTH -- 6"

LAMINATED GLASS AND LAMINATED INSULATING GLASS LARGE/SMALL MISSILE IMPACT

Engr: JAVAD AHMAD
CIVIL
FLA. PE # 70592
C.A.N. 3538

OCT 10 2011

AL-FAROOQ CORPORATION
ENGINEERS & PRODUCT DEVELOPMENT
1235 S.W. 87 AVE
MIAMI, FLORIDA 33174
TEL. (305) 264-8100 FAX. (305) 262-6978
COMP-ANL\W10-31CGI

SERIES 150 SENTINEL ALUM. SLIDING GLASS DOOR (L.M.I./S.M.I.)

CGI WINDOWS & DOORS
10100 N.W. 25TH STREET
MIAMI, FL. 33172
TEL. (305) 593-6590 FAX. (305) 593-6592

revisions:

no	date	by	description
A	08.17.10		REV. PER BCCO COMMENTS
B	02.18.11		NO CHANGE THIS SHEET
C	04.29.11		REV. PER BNC COMMENTS
D	10.10.11		UPDATED TO 2010 FBC

date: 05-20-10
scale: 1/2"=1'-0"
dr. by:
chk. by:

drawing no.
W10-31

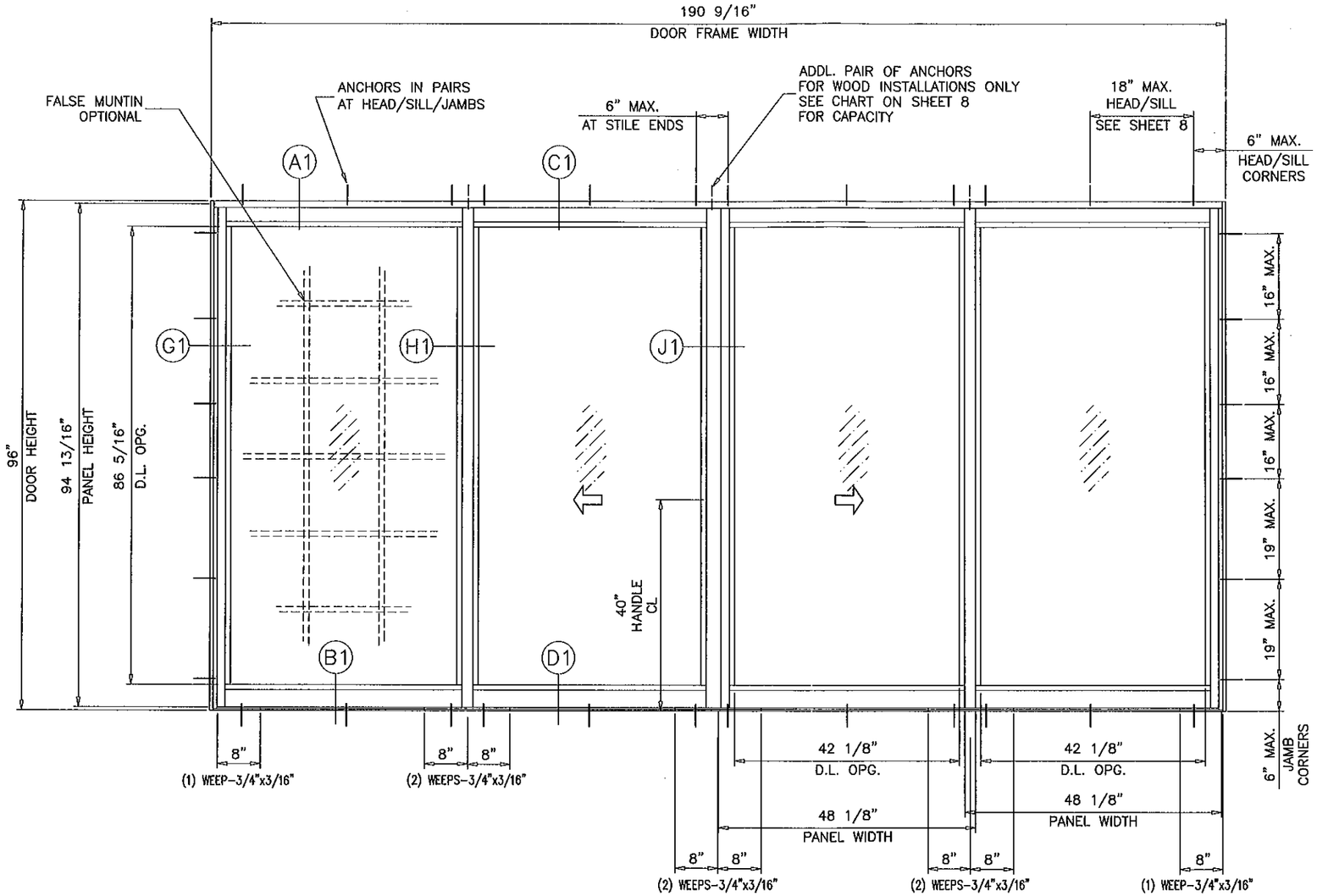

TYPICAL ELEVATION
(TESTED UNIT)

D.L. OPENING
D.L.O HEIGHT = DOOR HEIGHT – 9 11/16"
D.L.O. WIDTH = PANEL WIDTH – 6"

PRODUCT REVISED
as complying with the Florida Building Code
Acceptance No. 11-1031.05
Expiration Date 9/22/15
By Ishag J. Chaudhary
Miami Dade Product Control

Engr: JAVAD AHMAD
CIVIL
FLA. PE # 70592
C.A.N. 3538
OCT 10 2011

AL-FAROOQ CORPORATION
ENGINEERS & PRODUCT DEVELOPMENT
1235 S.W. 87 AVE
MIAMI, FLORIDA 33174
TEL. (305) 264-8100 FAX. (305) 262-6978
COMP-ANL\W10-31CGI

SERIES 150 SENTINEL ALUM SLIDING GLASS DOOR (L.M.I./S.M.I.)

CGI WINDOWS & DOORS
10100 N.W. 25TH STREET
MIAMI, FL. 33172
TEL. (305) 593-6590 FAX. (305) 593-6592

revisions:

no	date	by	description
A	08.17.10		REV. PER BCCO COMMENTS
B	02.18.11		NO CHANGE THIS SHEET
C	04.29.11		REV. PER BNC COMMENTS
D	10.10.11		NO CHANGE THIS SHEET

date: 05-20-10
scale: 1/2"=1'-0"
dr. by:
chk. by:

drawing no.
W10-31

sheet 2 of 16

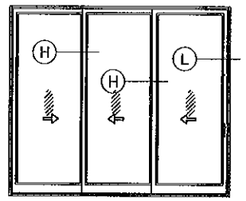

XXX (SHOWN)
OXX
XXO
XXX (REVERSE)

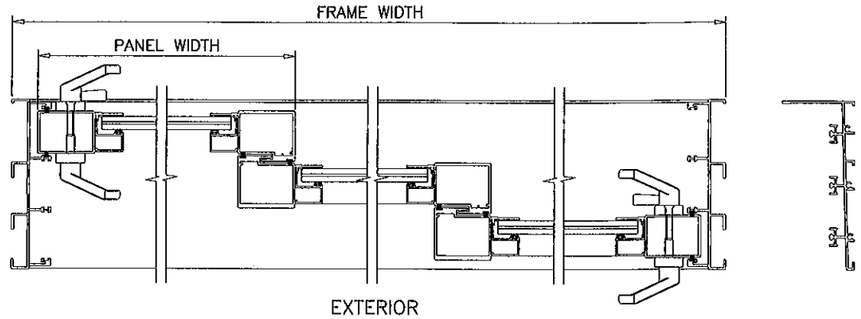

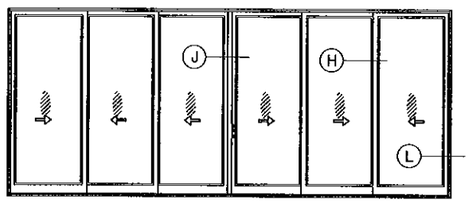

XXXXXX (SHOWN)
OXXXXO

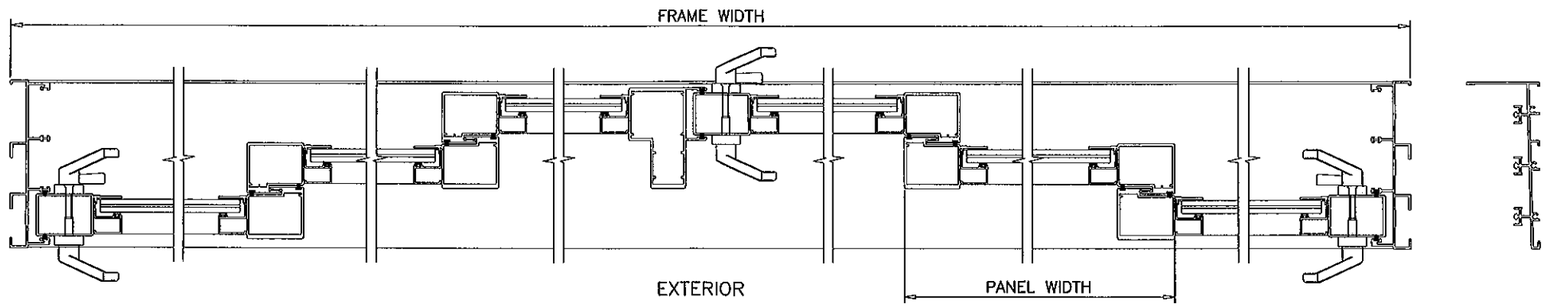

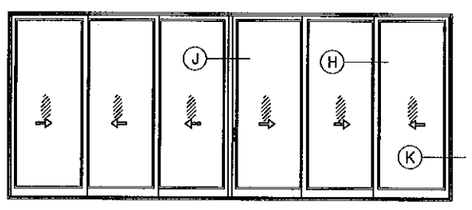

XXXXXX (SHOWN)
OXXXXO

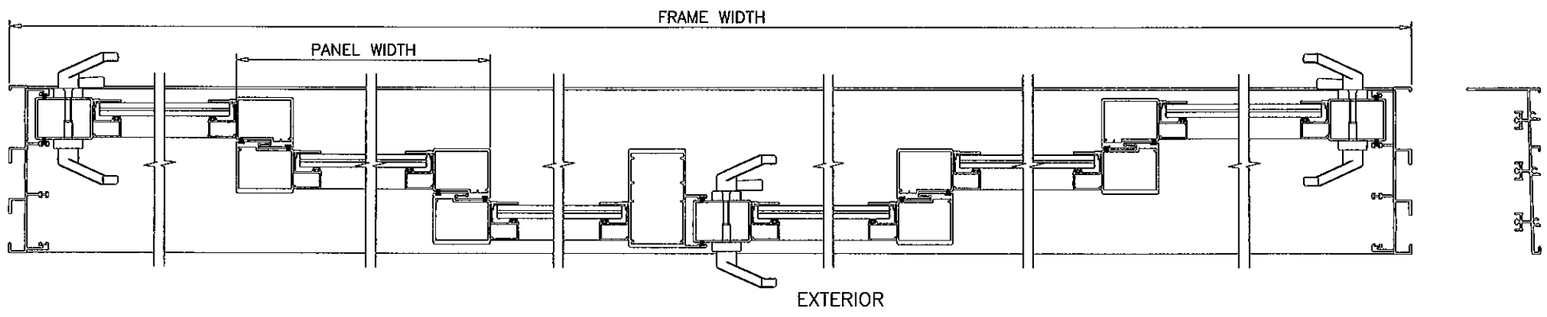

APPROVED CONFIGURATIONS
NON–POCKETED DOORS (NON–REINFORCED SHOWN)
THREE (3) TRACKS

PRODUCT REVIEWED
as complying with the Florida
Building Code
Acceptance No. 11-1031.05
Expiration Date 9/22/15
By Shane J. Chandler
Miami-Dade Product Control

Engr: JAVAD AHMAD
CIVIL
FLA. PE #. 70592
C.A.N. 3538
OCT 10 2011

AL-FAROOQ CORPORATION
ENGINEERS & PRODUCT DEVELOPMENT
1235 S.W. 87 AVE
MIAMI, FLORIDA 33174
TEL (305) 264-8100 FAX. (305) 262-6978

COMP–ANL\W10–31CGI

SERIES 150 SENTINEL ALUM SLIDING GLASS DOOR (L.M.I./S.M.I.)

CGI WINDOWS & DOORS
10100 N.W. 25TH STREET
MIAMI, FL. 33172
TEL. (305) 593-6590 FAX. (305) 593-6592

revisions:

no.	date	by	description
A	08.17.10		NO CHANGE THIS SHEET
B	02.18.11		NO CHANGE THIS SHEET
C	04.29.11		REV. PER BNC COMMENTS
D	10.10.11		NO CHANGE THIS SHEET

date: 05-20-10
scale: –
dr. by:
chk. by:

drawing no.
W10–31

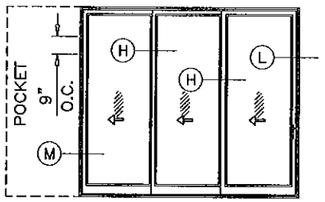

PXXX(SHOWN)
XXXP

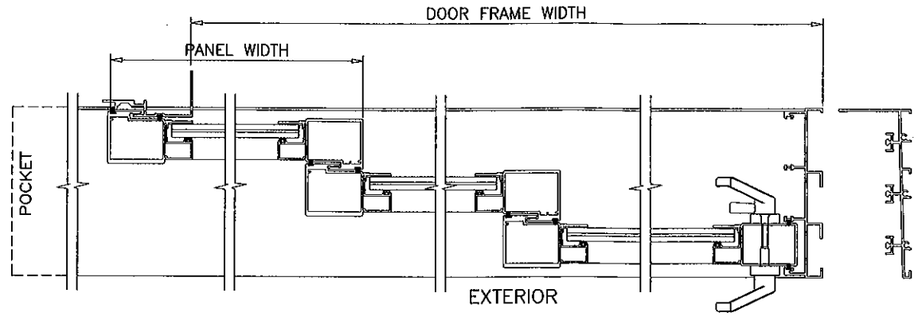

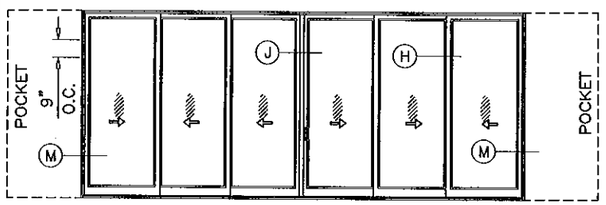

PXXXXXXP (SHOWN)

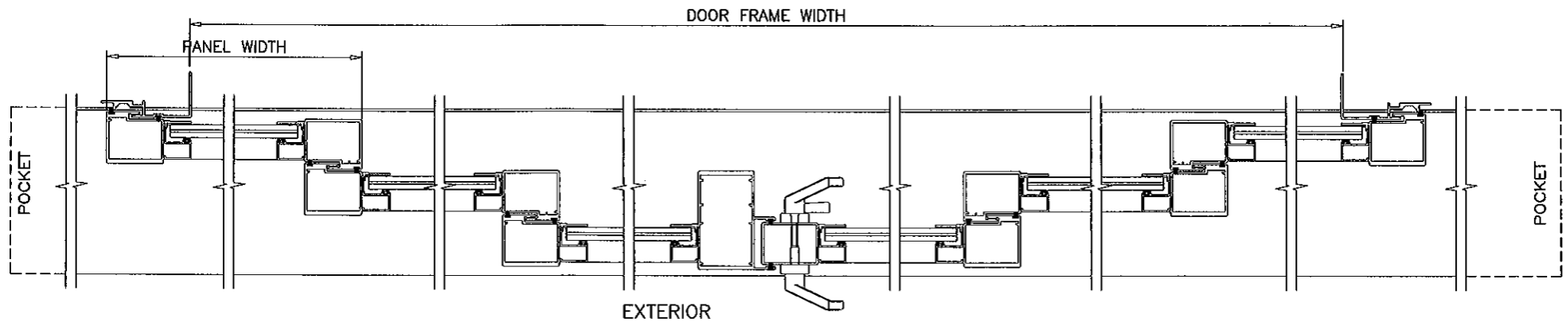

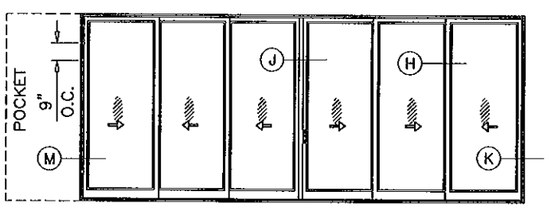

PXXXXXX(SHOWN)
PXXXXXO
XXXXXXP
OXXXXXP

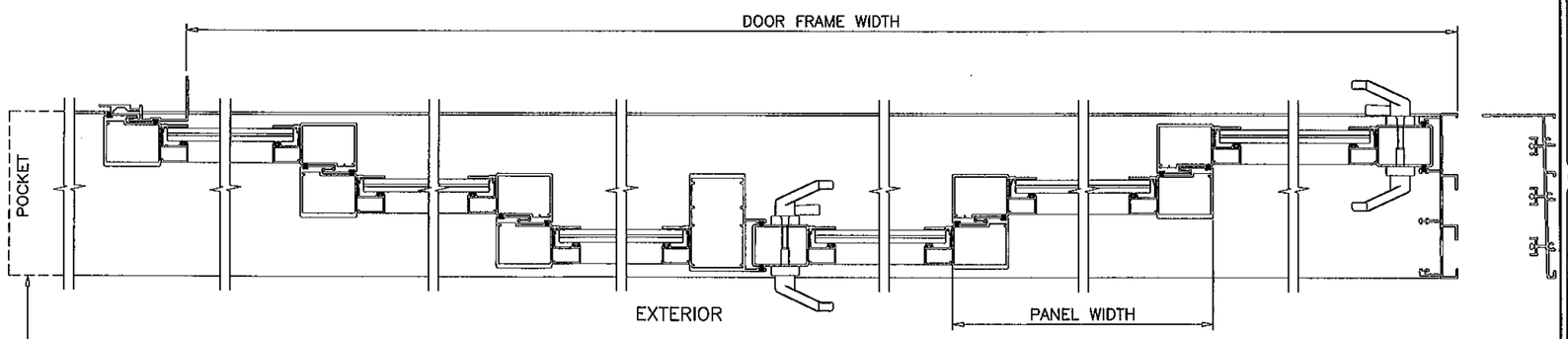

POCKET CAVITY NOT BY CGI
NOT PART OF THIS NOA

APPROVED CONFIGURATIONS
POCKETED DOORS (NON-REINFORCED SHOWN)

THREE (3) TRACKS

POCKETS ARE NOT PART OF THIS APPROVAL
AND TO BE REVIEWED BY AHJ.

PRODUCT REVISED
on complying with the Florida
Building Code
Acceptance No 11-1031.05
Expiration Date 9/22/15
By Ishwaq Lilhanek
Miami State Patient Control

Engr: JAVAD AHMAD
CIVIL
FLA. PE # 70592
C.A.N. 8538

OCT 10 2011

AL-FAROOQ CORPORATION
ENGINEERS & PRODUCT DEVELOPMENT
1235 S.W. 87 AVE
MIAMI, FLORIDA 33174
TEL. (305) 264-8100 FAX. (305) 262-6978
COMP-ANL\W10-31CGI

SERIES 150 SENTINEL ALUM SLIDING GLASS DOOR (L.M.I./S.M.I.)

CGI WINDOWS & DOORS
10100 N.W. 25TH STREET
MIAMI, FL. 33172
TEL. (305) 593-6590 FAX. (305) 593-6592

revisions:

no	date	by	description
A	08.17.10		REV. PER BCCO COMMENTS
B	02.18.11		NO CHANGE THIS SHEET
C	04.29.11		REV. PER BNC COMMENTS
D	10.10.11		NO CHANGE THIS SHEET

date: 05-20-10
scale: -
dr. by: HAMID
chk. by:

drawing no.
W10-31

sheet 4 of 16

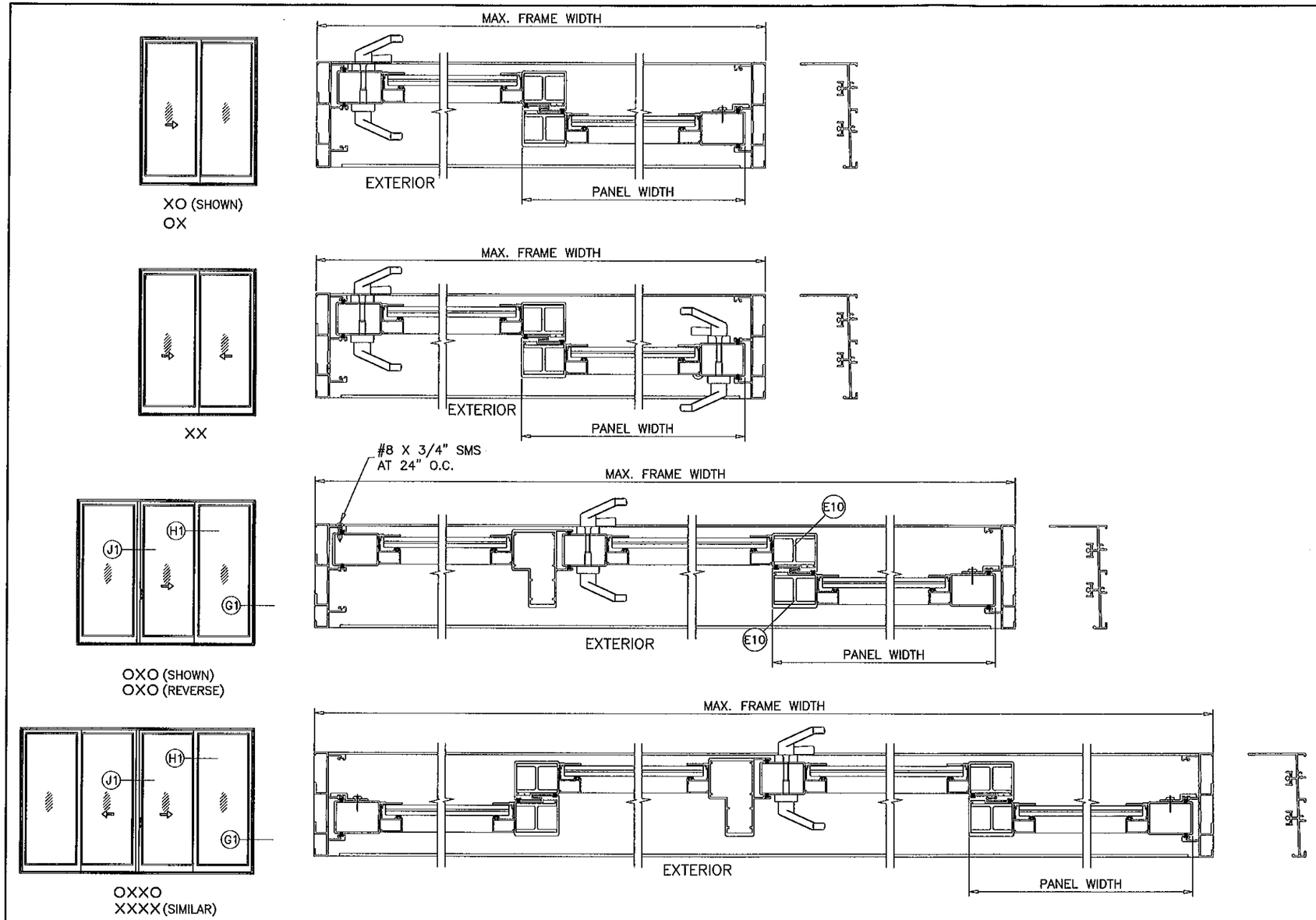

APPROVED CONFIGURATIONS
NON-POCKETED DOORS (REINFORCED SHOWN)
TWO (2) TRACKS

PRODUCT REVISED
as complying with the Florida Building Code
Acceptance No 11-1031.05
Expiration Date 9/22/15
By Ishag I. Chanda
Miami Dade Product Control

Engr: JAVAD AHMAD
CIVIL
FLA. PE # 70592
C.A.N. 3538
OCT 1 0 2011

AL-FAROOQ CORPORATION
ENGINEERS & PRODUCT DEVELOPMENT
1235 S.W. 87 AVE
MIAMI, FLORIDA 33174
TEL. (305) 264-8100 FAX. (305) 262-6978
COMP-ANL\W10-31CGI

SERIES 150 SENTINEL ALUM SLIDING GLASS DOOR (L.M.I./S.M.I.)

CGI WINDOWS & DOORS
10100 N.W. 25TH STREET
MIAMI, FL. 33172
TEL. (305) 593-6590 FAX. (305) 593-6592

revisions:

no	date	by	description
A	08.17.10		NO CHANGE THIS SHEET
B	02.18.11		NO CHANGE THIS SHEET
C	04.29.11		REV. PER BNC COMMENTS
D	10.10.11		NO CHANGE THIS SHEET

date: 05-20-10
scale: -
dr. by:
chk. by:

drawing no.
W10-31

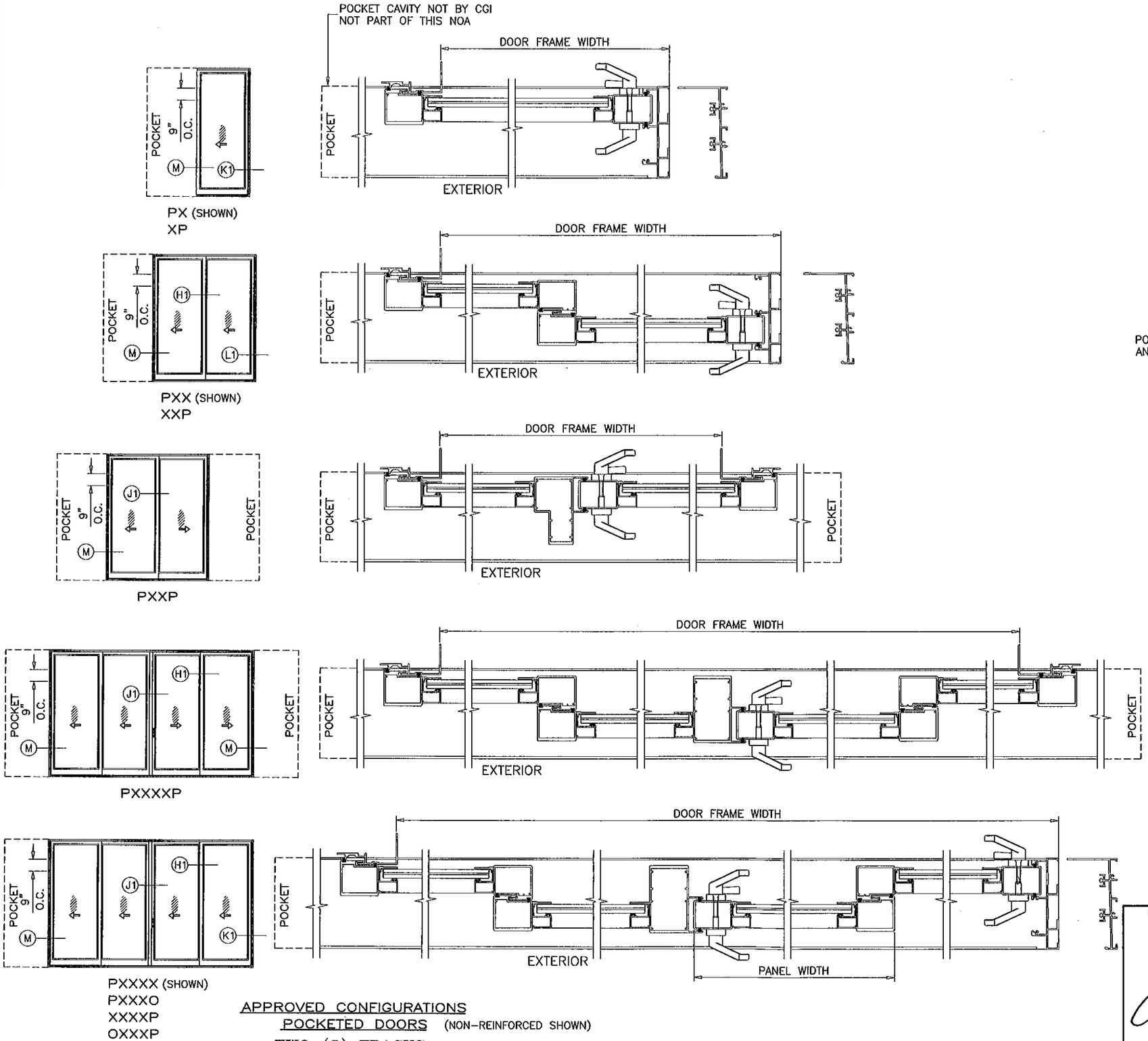

POCKETS ARE NOT PART OF THIS APPROVAL AND TO BE REVIEWED BY AHJ.

PRODUCT REVISED
in complying with the Florida Building Code
Acceptance No. 11-1031.05
Expiration Date 9/22/15
By Ishaq I. Chaudhry
Miami-Dade Product Control

Engr: JAVAD AHMAD
CIVIL
FLA. PE # 70592
C.A.N. 3538

OCT 10 2011

APPROVED CONFIGURATIONS
POCKETED DOORS (NON-REINFORCED SHOWN)
TWO (2) TRACKS

AL-FAROOQ CORPORATION
ENGINEERS & PRODUCT DEVELOPMENT
1235 S.W. 87 AVE
MIAMI, FLORIDA 33174
TEL. (305) 264-8100 FAX. (305) 262-6978
COMP-ANL\W10-31CGI

SERIES 150 SENTINEL ALUM. SLIDING GLASS DOOR (L.M.I./S.M.I.)

CGI WINDOWS & DOORS
10100 N.W. 25TH STREET
MIAMI, FL. 33172
TEL. (305) 593-6590 FAX. (305) 593-6592

revisions:

no	date	by	description
A	08.17.10		REV. PER BCCO COMMENTS
B	02.18.11		NO CHANGE THIS SHEET
C	04.29.11		REV. PER BNC COMMENTS
D	10.10.11		NO CHANGE THIS SHEET

date: 05-20-10
scale: –
dr. by:
chk. by:

drawing no.
W10-31

GLASS CAPACITY CHARTS

DESIGN LOAD CAPACITY – PSF (GLASS)					
		GLASS TYPES 'A' & 'A1'		GLASS TYPES 'B' & 'B1'	
		INTERLOCKS W/O REINF.		INTERLOCKS WITH REINF.	
PANEL WIDTH INCHES	DOOR HEIGHT INCHES	EXT.(+)	INT.(–)	EXT.(+)	INT.(–)
24–1/8	80	60.0	60.0	80.0	80.0
30–1/8		60.0	60.0	80.0	80.0
36–1/8		60.0	60.0	80.0	80.0
42–1/8		60.0	60.0	80.0	80.0
48–1/8		60.0	60.0	80.0	80.0
54–1/8		60.0	60.0	80.0	80.0
24–1/8	84	60.0	60.0	80.0	80.0
30–1/8		60.0	60.0	80.0	80.0
36–1/8		60.0	60.0	80.0	80.0
42–1/8		60.0	60.0	80.0	80.0
48–1/8		60.0	60.0	80.0	80.0
54–1/8		60.0	60.0	80.0	80.0
24–1/8	90	60.0	60.0	80.0	80.0
30–1/8		60.0	60.0	80.0	80.0
36–1/8		60.0	60.0	80.0	80.0
42–1/8		60.0	60.0	80.0	80.0
48–1/8		60.0	60.0	80.0	80.0
24–1/8	96	60.0	60.0	80.0	80.0
30–1/8		60.0	60.0	80.0	80.0
36–1/8		60.0	60.0	80.0	80.0
42–1/8		60.0	60.0	80.0	80.0
48–1/8		60.0	60.0	80.0	80.0

APPLICABLE FBC EGRESS REQUIREMENTS TO BE REVIEWED BY AHJ.

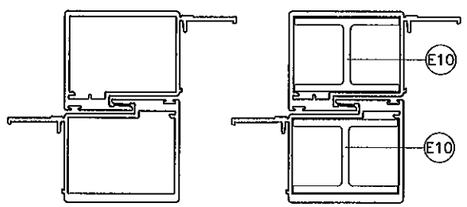

INTERLOCKS W/O REINF. INTERLOCKS WITH REINF.

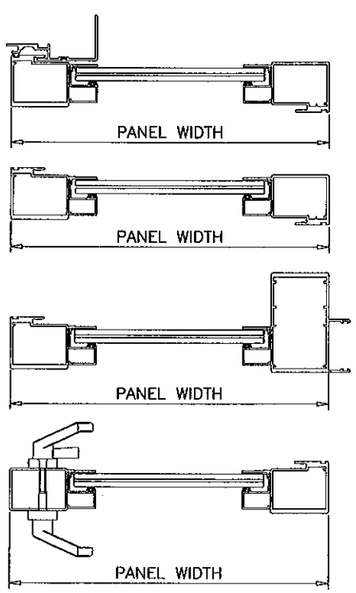

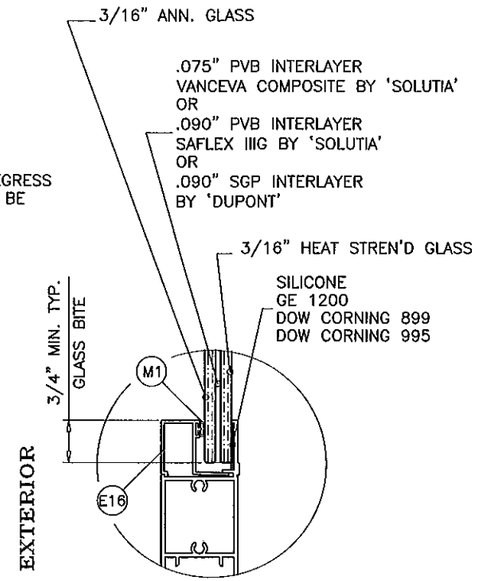

GLASS TYPE 'A'
7/16" OVERALL LAM. GLASS

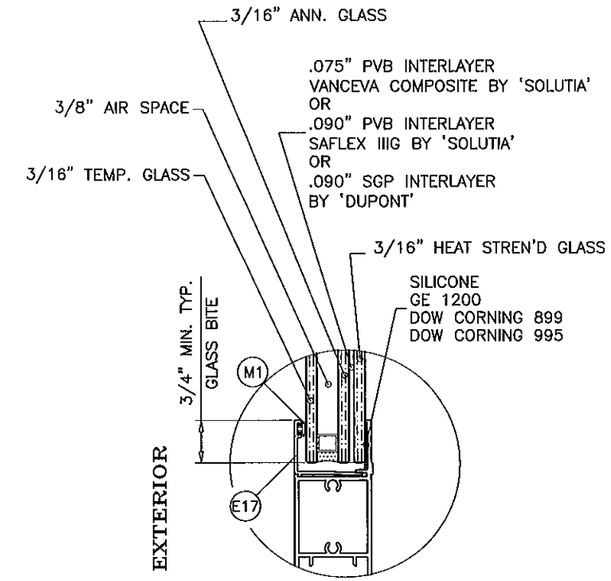

GLASS TYPE 'A1'
1" OVERALL INSUL. LAM. GLASS

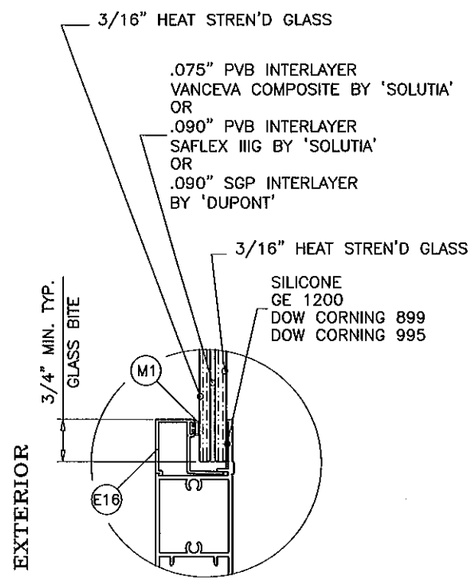

GLASS TYPE 'B'
7/16" OVERALL LAM. GLASS

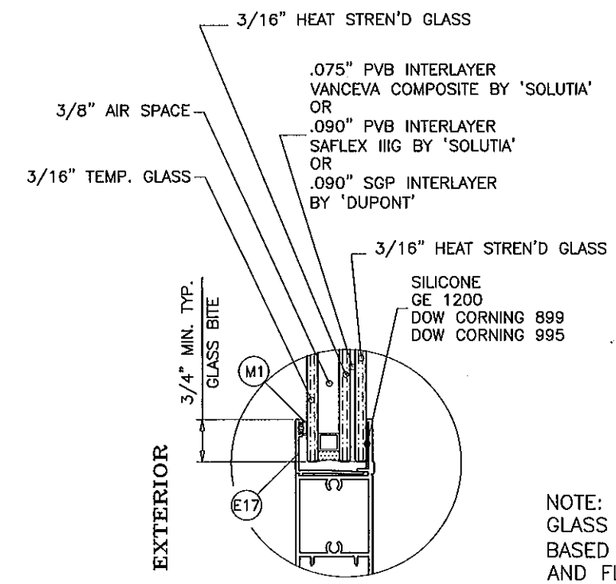

GLASS TYPE 'B1'
1" OVERALL INSUL. LAM. GLASS

GLAZING OPTIONS

FOR STD. SILL WITHOUT RISER LIMIT EXT. (+) LOADS TO 60.0 PSF
FOR SILL WITH RISER MAX. EXT. (+) LOADS ARE 80 PSF

PRODUCT REVISED
as complying with the Florida Building Code
Acceptance No. 11-1031.05
Expiration Date 9/22/15
By Ishan Chandra
Miami-Dade Product Control

NOTE:
GLASS CAPACITIES ON THIS SHEET ARE BASED ON ASTM E1300–04 (3 SEC. GUSTS) AND FLORIDA BUILDING COMMISSION DECLARATORY STATEMENT DCA05–DEC–219

Engr: JAVAD AHMAD
CIVIL
FLA. PE # 70592
C.A.N. 3538

OCT 10 2011

AL-FAROOQ CORPORATION
ENGINEERS & PRODUCT DEVELOPMENT
1235 S.W. 87 AVE
MIAMI, FLORIDA 33174
TEL. (305) 264-8100 FAX. (305) 262-6978
COMP–ANL\W10–31CGI

SERIES 150 SENTINEL ALUM. SLIDING GLASS DOOR (L.M.I./S.M.I.)

CGI WINDOWS & DOORS
10100 N.W. 25TH STREET
MIAMI, FL. 33172
TEL. (305) 593-6590 FAX. (305) 593-6592

revisions:

no	date	by	description
A	08.17.10		REV PER BCCO COMMENTS
B	02.18.11		INTERLAYER ADDED
C	04.29.11		REV. PER BNC COMMENTS
D	10.10.11		NO CHANGE THIS SHEET

date: 05–20–10
scale: 3/8" = 1"
dr. by:
chk. by:

drawing no.
W10–31

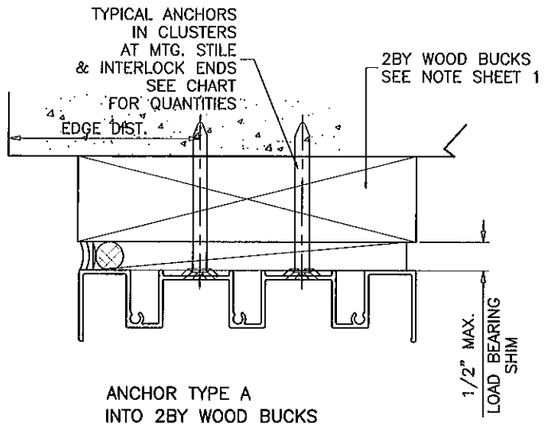

ANCHOR TYPE A
INTO 2BY WOOD BUCKS
OR WOOD STRUCTURES

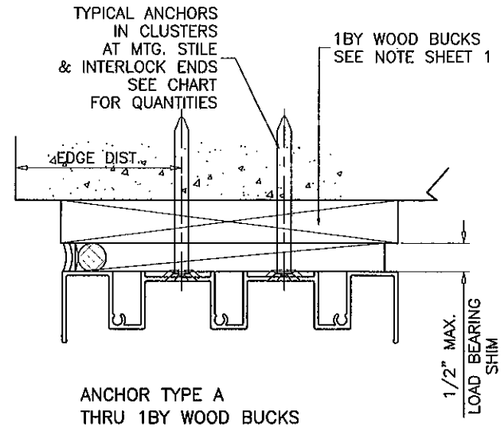

ANCHOR TYPE A
THRU 1BY WOOD BUCKS
INTO 3 KSI CONCRETE

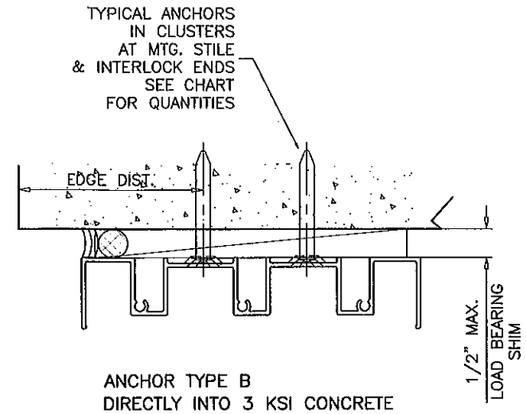

ANCHOR TYPE B
DIRECTLY INTO 3 KSI CONCRETE

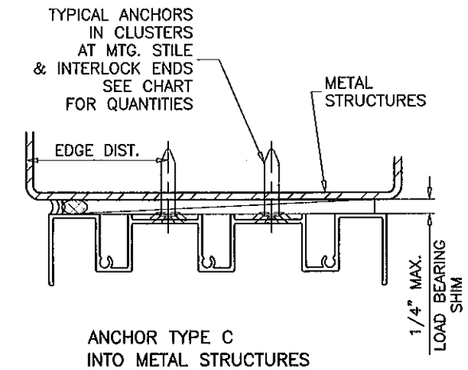

ANCHOR TYPE C
INTO METAL STRUCTURES
OR APPROVED MULLIONS

WOOD BUCKS AND METAL STRUCTURES NOT BY CGI WINDOWS MUST SUSTAIN LOADS IMPOSED BY GLAZING SYSTEM AND TRANSFER THEM TO THE BUILDING STRUCTURE.

TYPICAL ANCHORS: SEE ELEV. FOR SPACING

AT HEAD

TYPE 'A'– 1/4" DIA. ULTRACON BY 'ELCO' (Fu=177 KSI, Fy=155 KSI)
THRU 1BY BUCKS INTO CONCRETE
1–1/4" MIN. EMBED INTO CONCRETE
THRU 2BY BUCKS INTO CONCRETE
1/2" MIN. EMBED INTO CONCRETE

TYPE 'B'– 1/4" DIA. ULTRACON BY 'ELCO' (Fu=177 KSI, Fy=155 KSI)
DIRECTLY INTO CONCRETE
2" MIN. EMBED

TYPE 'C'– #14 SMS OR SELF DRILLING SCREWS (GRADE 2 CRS)
INTO MIAMI–DADE COUNTY APPROVED MULLIONS (1/8" THK. MIN.)
INTO METAL STRUCTURES
STEEL : 1/8" THK. MIN. (Fy = 36 KSI MIN.)
ALUMINUM : 1/8" THK. MIN. (6063–T5 MIN.)
(STEEL IN CONTACT WITH ALUMINUM TO BE PLATED OR PAINTED)

AT JAMBS

TYPE 'A'– 1/4" DIA. ULTRACON BY 'ELCO' (Fu=177 KSI, Fy=155 KSI)
INTO 2BY WOOD BUCKS OR WOOD STRUCTURES
1–3/8" MIN. PENETRATION INTO WOOD
THRU 1BY BUCKS INTO CONC. OR MASONRY
1–1/4" MIN. EMBED INTO CONC. OR MASONRY

TYPE 'B'– 1/4" DIA. ULTRACON BY 'ELCO' (Fu=177 KSI, Fy=155 KSI)
DIRECTLY INTO CONC. OR MASONRY
1–1/4" MIN. EMBED INTO CONC. OR MASONRY

TYPE 'C'– #14 SMS OR SELF DRILLING SCREWS (GRADE 2 CRS)
INTO MIAMI–DADE COUNTY APPROVED MULLIONS (1/8" THK. MIN.)
INTO METAL STRUCTURES
STEEL : 1/8" THK. MIN. (Fy = 36 KSI MIN.)
ALUMINUM : 1/8" THK. MIN. (6063–T5 MIN.)
(STEEL IN CONTACT WITH ALUMINUM TO BE PLATED OR PAINTED)

AT SILL

TYPE 'B'– 1/4" DIA. ULTRACON BY 'ELCO' (Fu=177 KSI, Fy=155 KSI)
DIRECTLY INTO CONCRETE
1–1/4" MIN. EMBED

ANCHOR EDGE DISTANCES

INTO CONCRETE = 2–1/2" MIN.
INTO WOOD STRUCTURE = 1" MIN.
INTO METAL STRUCTURE = 3/4" MIN.

CONCRETE AT HEAD, SILL OR JAMBS f'c = 3000 PSI MIN.
C–90 HOLLOW/FILLED BLOCK AT JAMBS f'm = 2000 PSI MIN.

DESIGN LOAD CAPACITY – PSF (ANCHORS)

PANEL WIDTH INCHES	DOOR HEIGHT INCHES	ANCHORS TYPE 'A' CLUSTER OF 4	ANCHORS TYPE 'A' CLUSTER OF 6	ANCHORS TYPE 'B' & 'C' CLUSTER OF 4
24–1/8	80	80.0	–	80.0
30–1/8		80.0	–	80.0
36–1/8		80.0	–	80.0
42–1/8		80.0	–	80.0
48–1/8		80.0	–	80.0
54–1/8		80.0	–	80.0
24–1/8	84	80.0	–	80.0
30–1/8		80.0	–	80.0
36–1/8		80.0	–	80.0
42–1/8		80.0	–	80.0
48–1/8		80.0	–	80.0
54–1/8		75.9	80.0	80.0
24–1/8	90	80.0	–	80.0
30–1/8		80.0	–	80.0
36–1/8		80.0	–	80.0
42–1/8		80.0	–	80.0
48–1/8		73.7	80.0	80.0
24–1/8	96	80.0	–	80.0
30–1/8		80.0	–	80.0
36–1/8		80.0	–	80.0
42–1/8		74.1	–	80.0
48–1/8		67.5	80.0	80.0

INTERPOLATION BETWEEN WIDTHS AND HEIGHTS ACCEPTABLE

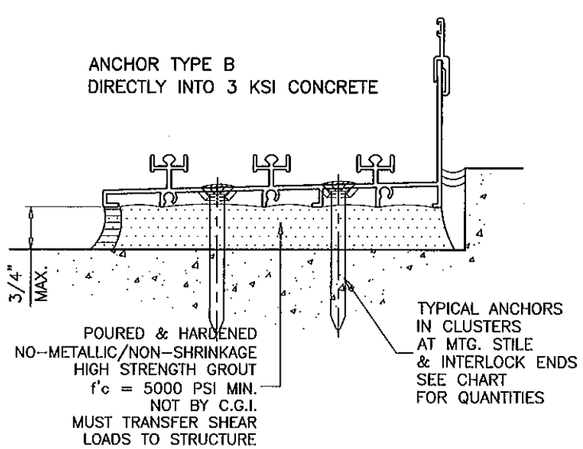

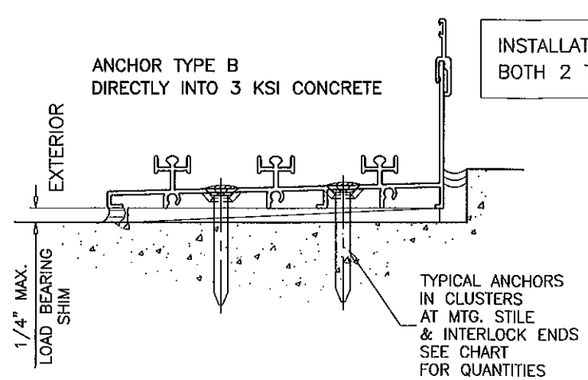

INSTALLATION CONDITIONS SHOWN APPLY TO BOTH 2 TRACK AND 3 TRACK SYSTEMS.

NOTE:
ANCHOR CAPACITIES LISTED ON THIS SHEET TO BE USED IN CONJUNCTION WITH GLASS CHARTS ON SHEET 7 LOWER APPLICABLE VALUES CONTROL.

Engr: JAVAD AHMAD
CIVIL
FLA. PE # 70592
C.A.N. 3538

OCT 10 2011

PRODUCT REVISED
as complying with the Florida Building Code
Acceptance No 11-1031.05
Expiration Date 9/22/15

AL-FAROOQ CORPORATION
ENGINEERS & PRODUCT DEVELOPMENT
1235 S.W. 87 AVE
MIAMI, FLORIDA 33174
TEL. (305) 264-8100 FAX. (305) 262-6978
COMP–ANL\W10–31CGI

SERIES 150 SENTINEL ALUM. SLIDING GLASS DOOR (L.M.I./S.M.I.)

CGI WINDOWS & DOORS
10100 N.W. 25TH STREET
MIAMI, FL. 33172
TEL. (305) 593–6590 FAX. (305) 593–6592

revisions:

no	date	by	description
A	08.17.10		REV. PER BOCO COMMENTS
B	02.18.11		NO CHANGE THIS SHEET
C	04.29.11		REV. PER BNC COMMENTS
D	10.10.11		NO CHANGE THIS SHEET

date: 05–20–10
scale: 3/8" = 1"
dr. by:
chk. by:

drawing no.
W10–31

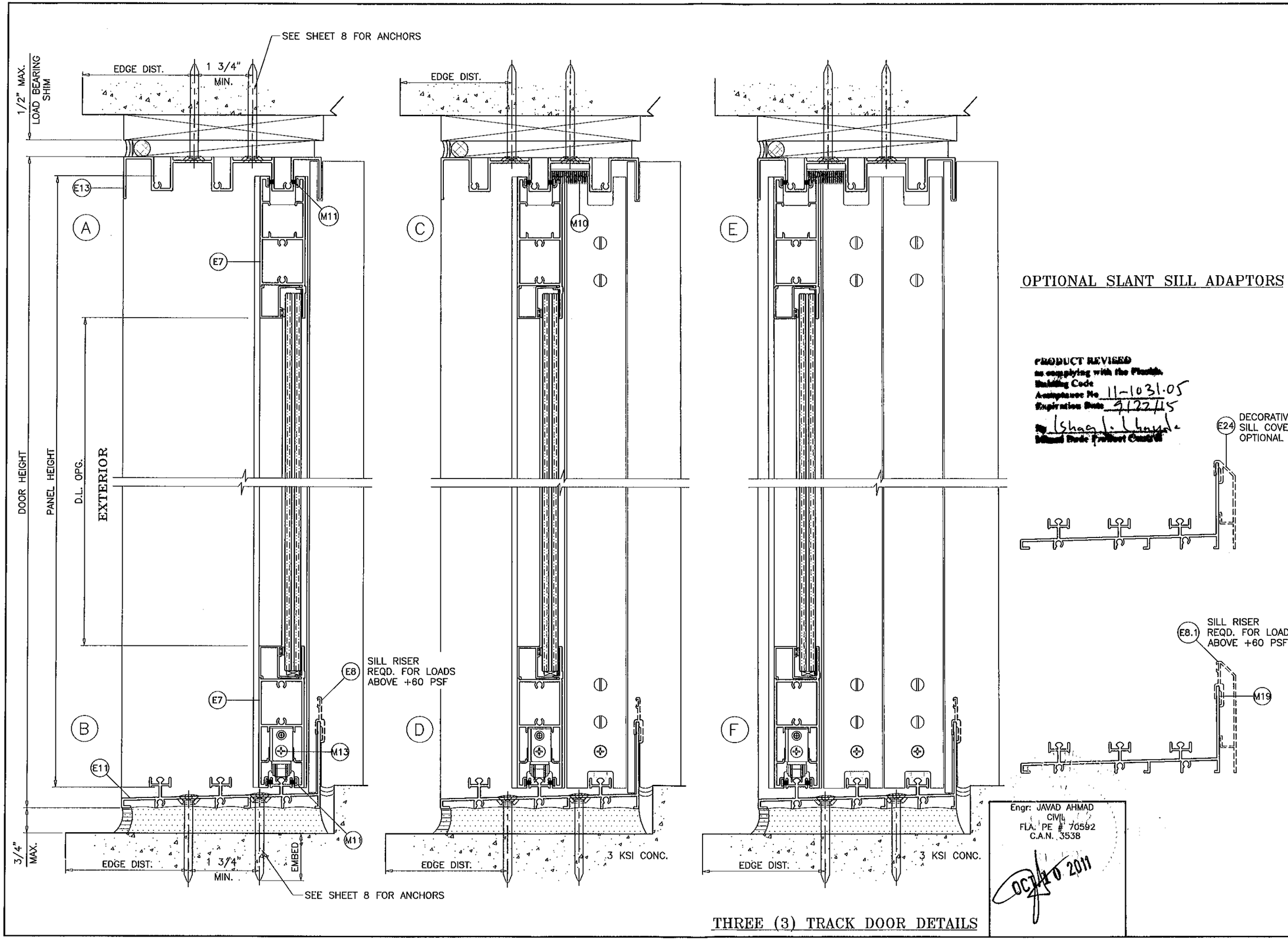

PRODUCT REVISED
as complying with the Florida
Building Code
Acceptance No 11-1031.05
Expiration Date 9/22/15
By Ishaq I. Khayde
Miami Dade Product Control

Engr: JAVAD AHMAD
CIVIL
FLA. PE # 70592
C.A.N. 3538
OCT 10 2011

THREE (3) TRACK DOOR DETAILS

AL-FAROOQ CORPORATION
ENGINEERS & PRODUCT DEVELOPMENT
1235 S.W. 87 AVE
MIAMI, FLORIDA 33174
TEL. (305) 264-8100 FAX. (305) 262-6978

COMP-ANL\W10-31CGI

SERIES 150 SENTINEL ALUM SLIDING GLASS DOOR (L.M.I./S.M.I.)

CGI WINDOWS & DOORS
10100 N.W. 25TH STREET
MIAMI, FL. 33172
TEL. (305) 593-6590 FAX. (305) 593-6592

revisions:

no	date	by	description
A	08.17.10		REV. PER BCCO COMMENTS
B	02.18.11		OPTIONAL SILL RISER ADDED
C	04.29.11		REV. PER BNC COMMENTS
D	10.10.11		NO CHANGE THIS SHEET

date: 05-20-10
scale: 3/8" = 1"
dr. by:
chk. by:

drawing no.
W10-31

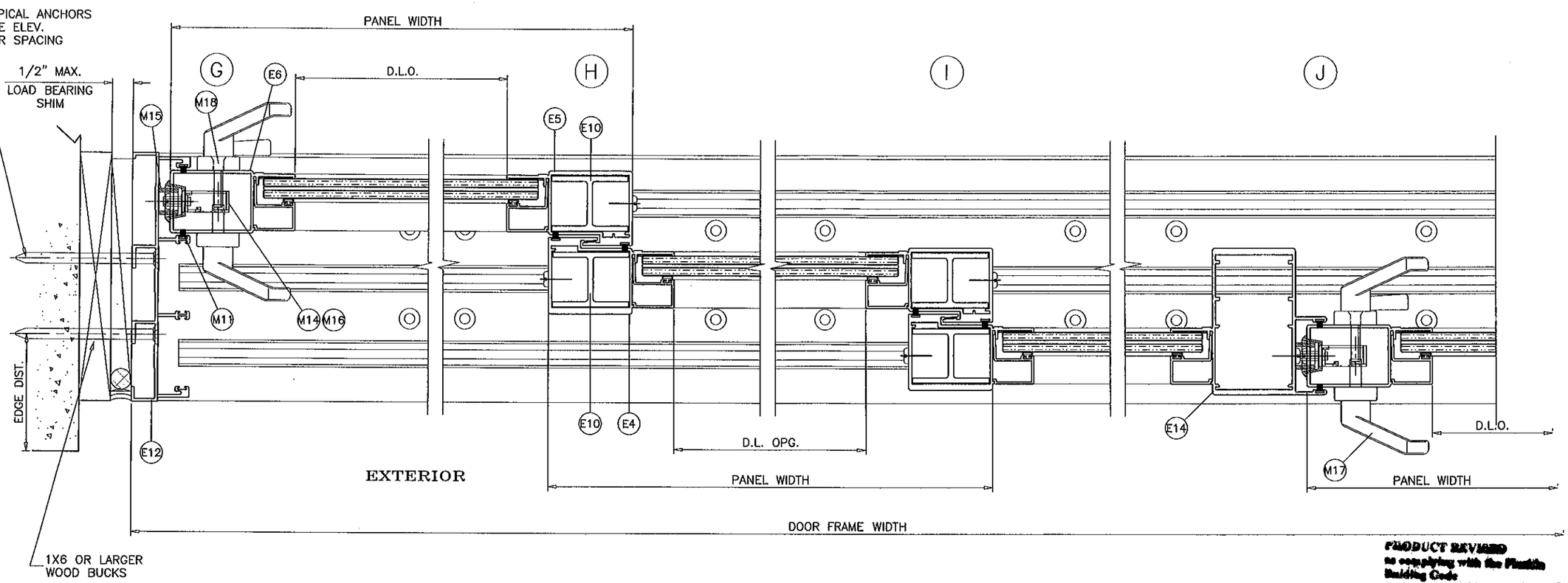

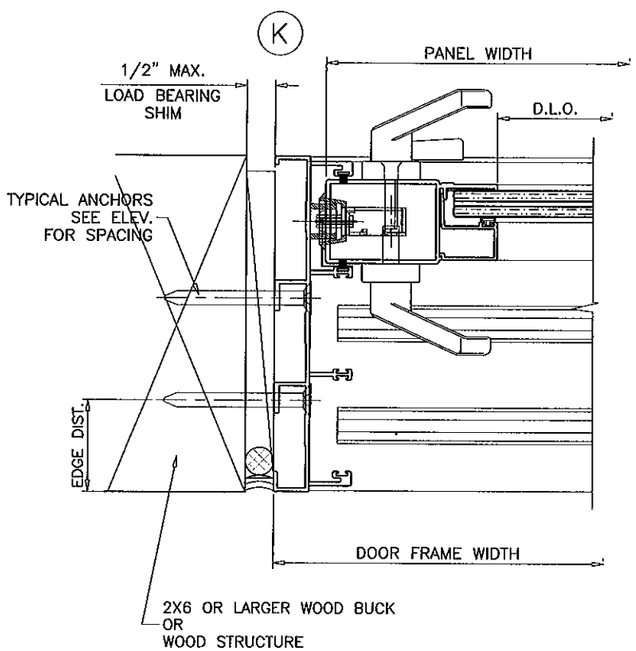

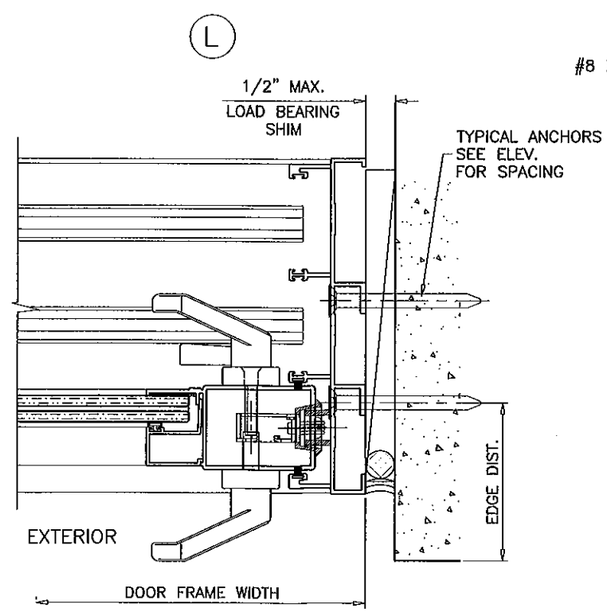

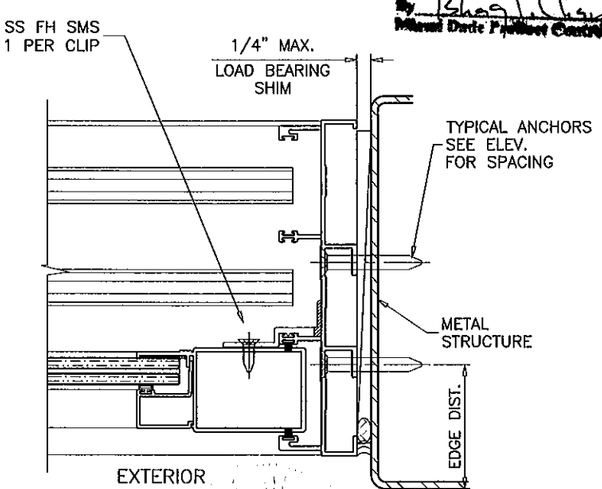

THREE (3) TRACK DOOR DETAILS

PRODUCT REVIEWED
as complying with the Florida Building Code
Acceptance No. 11-1031.05
Expiration Date 9/27/15
By Ishaq
Miami Dade Product Control

Engr: JAVAD AHMAD
CIVIL
FLA. PE # 70592
C.A.N. 3538

OCT 10 2011

AL-FAROOQ CORPORATION
ENGINEERS & PROJECT DEVELOPMENT
1235 S.W. 87 AVE
MIAMI, FLORIDA 33174
TEL. (305) 264-8100 FAX. (305) 262-6978
COMP-ANL\W10-31CGI

SERIES 150 SENTINEL ALUM SLIDING GLASS DOOR (L.M.I./S.M.I.)

CGI WINDOWS & DOORS
10100 N.W. 25TH STREET
MIAMI, FL. 33172
TEL. (305) 593-6590 FAX. (305) 593-6592

revisions:

no	date	by	description
A	08.17.10		REV. PER BCCO COMMENTS
B	02.18.11		FIX. PANEL CLIP REV.
C	04.29.11		REV. PER BNC COMMENTS
D	10.10.11		NO CHANGE THIS SHEET

date: 05-20-10
scale: 3/8" = 1"
dr. by:
chk. by:

drawing no.
W10-31

sheet 10 of 16

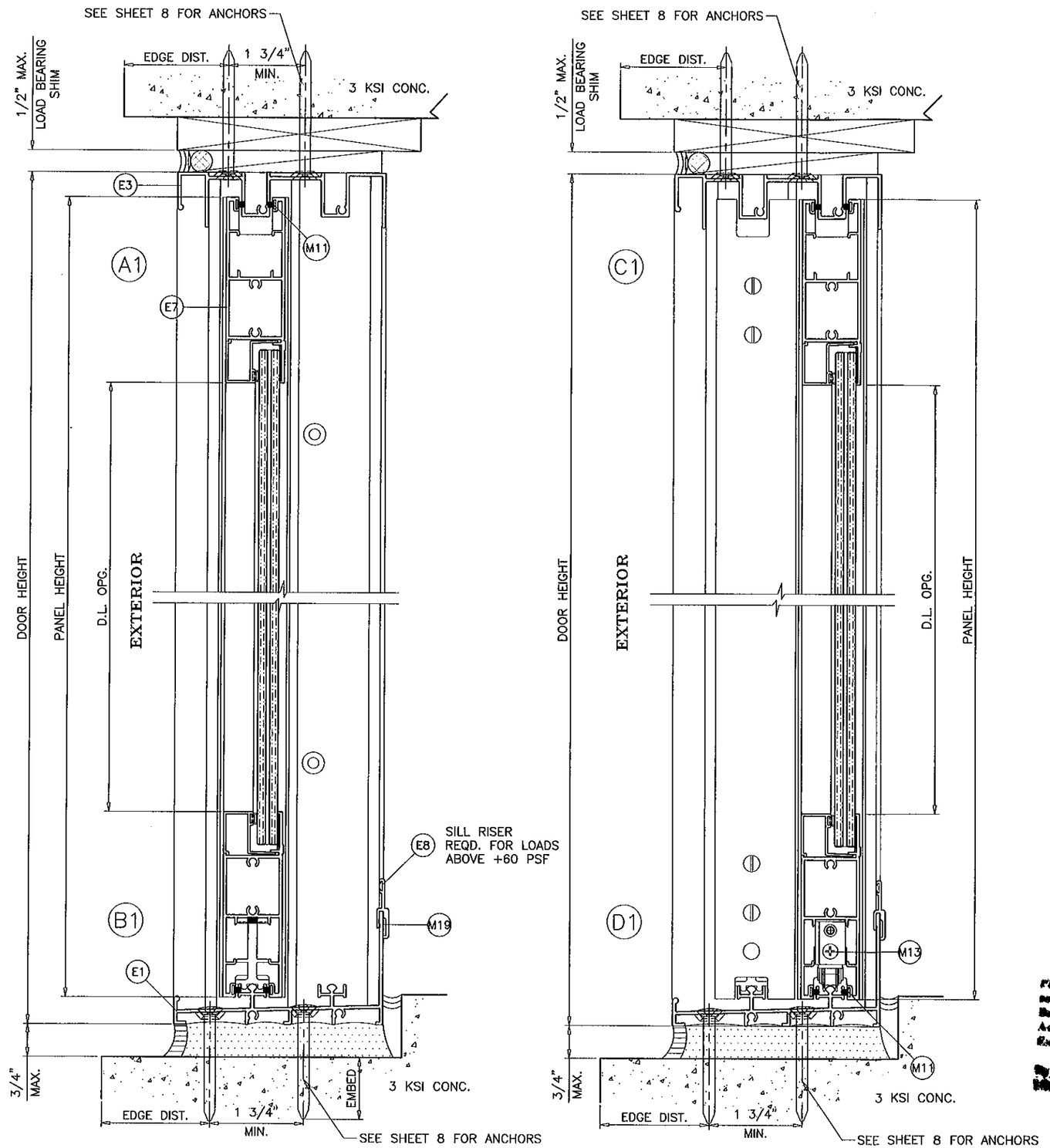

REFER TO SHEET 8 FOR VARIOUS INSTALLATION CONDITIONS.

OPTIONAL SLANT SILL ADAPTORS

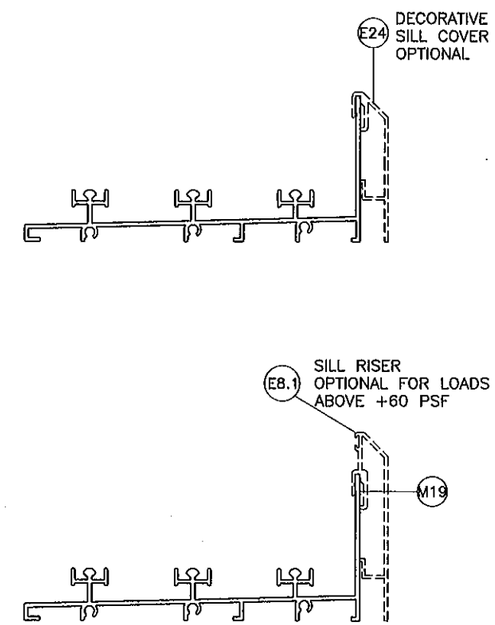

PRODUCT REVISED
as complying with the Florida Building Code
Acceptance No. 11-1031.05
Expiration Date 9/22/15
By [signature]
Miami Dade Product Control

Engr: JAVAD AHMAD
CIVIL
FLA. PE # 70592
C.A.N. 3538

OCT 10 2011

TWO (2) TRACK DOOR DETAILS

AL-FAROOQ CORPORATION
ENGINEERS & PRODUCT DEVELOPMENT
1235 S.W. 87 AVE
MIAMI, FLORIDA 33174
TEL. (305) 264-8100 FAX. (305) 262-6978

COMP-ANL\W10-31CGI

SERIES 150 SENTINEL ALUM SLIDING GLASS DOOR (L.M.I./S.M.I.)

CGI WINDOWS & DOORS
10100 N.W. 25TH STREET
MIAMI, FL. 33172
TEL. (305) 593-6590 FAX. (305) 593-6592

revisions:

no	date	by	description
A	08.17.10		REV. PER BCCO COMMENTS
B	02.18.11		OPTIONAL SILL RISER ADDED
C	04.29.11		REV. PER BNC COMMENTS
D	10.10.11		NO CHANGE THIS SHEET

date: 05-20-10
scale: 3/8" = 1"
dr. by:
chk. by:

drawing no.
W10-31

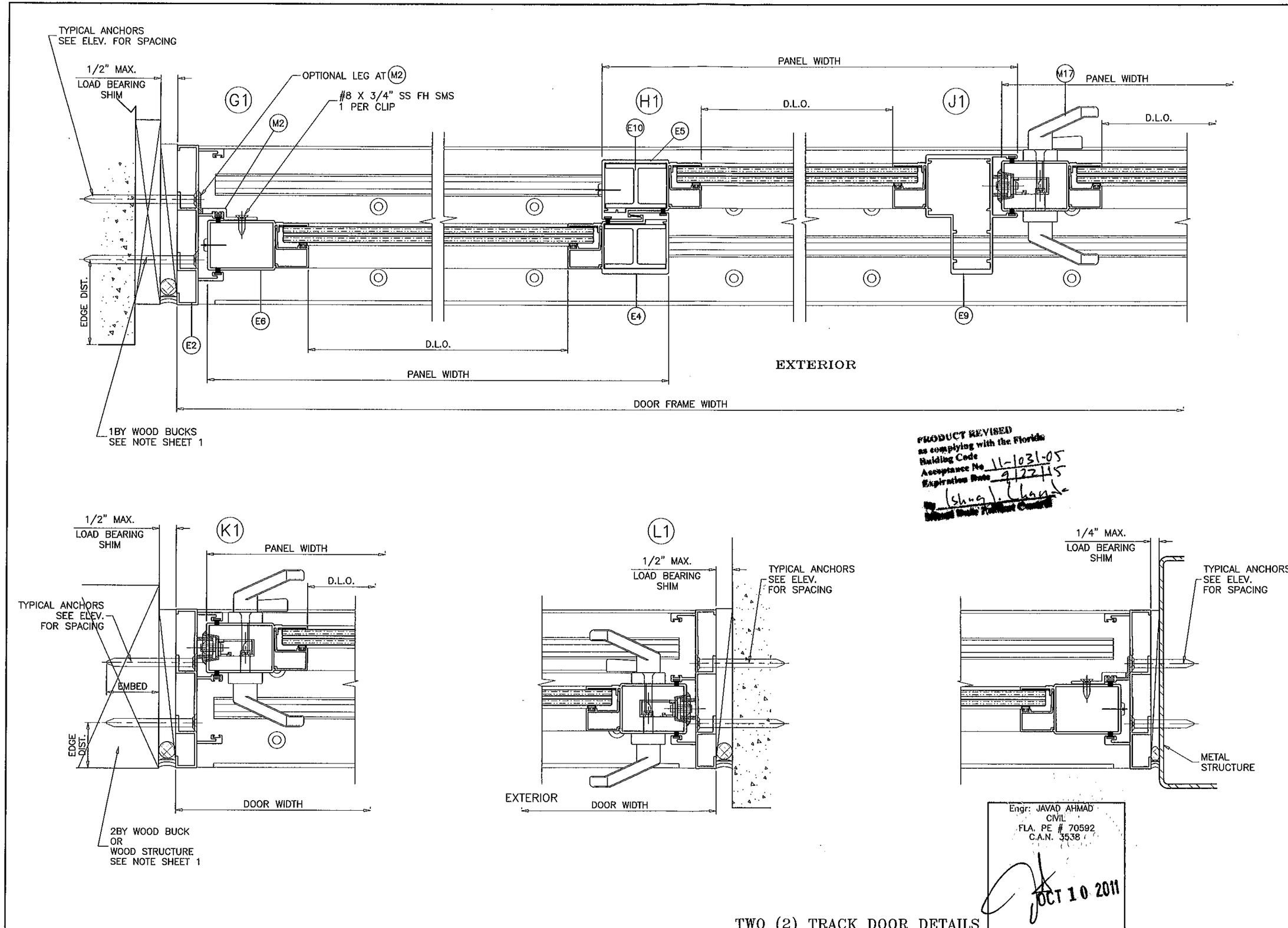

PRODUCT REVISED
as complying with the Florida
Building Code
Acceptance No 11-1031-05
Expiration Date 9/22/15
By (Shug) Chandra
Miami Dade Product Control

Engr: JAVAD AHMAD
CIVIL
FLA. PE # 70592
C.A.N. 3538

OCT 10 2011

TWO (2) TRACK DOOR DETAILS

AL-FAROOQ CORPORATION
ENGINEERS & PRODUCT DEVELOPMENT
1235 S.W. 87 AVE
MIAMI, FLORIDA 33174
TEL. (305) 264-8100 FAX. (305) 262-6978
COMP-ANL\W10-31CGI

SERIES 150 SENTINEL ALUM SLIDING GLASS DOOR (L.M.I./S.M.I.)

CGI WINDOWS & DOORS
10100 N.W. 25TH STREET
MIAMI, FL. 33172
TEL. (305) 593-6590 FAX. (305) 593-6592

revisions:

no	date	by	description
A	08.17.10		REV. PER BCCO COMMENTS
B	02.18.11		FIX. PANEL CLIP REV.
C	04.29.11		REV. PER BNC COMMENTS
D	10.10.11		NO CHANGE THIS SHEET

date: 05-20-10
scale: 3/8" = 1"
dr. by:
chk. by:

drawing no.
W10-31

POCKETED JAMB

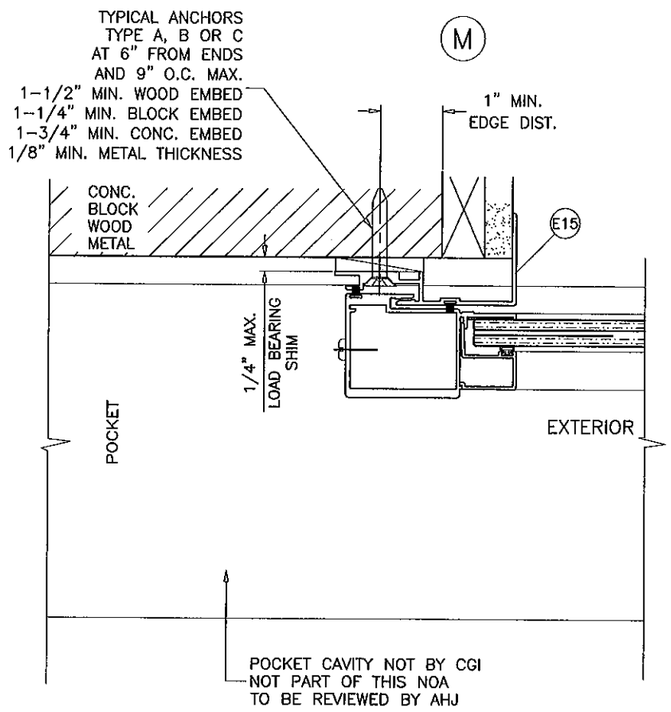

TYPICAL PAD PILE INSTALATION LOCATION

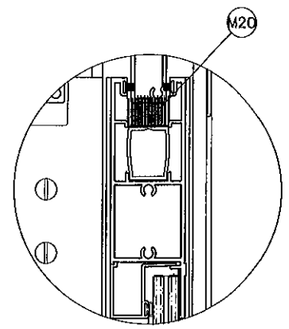

TYPICAL AT PANEL 4 CORNERS

PRODUCT REVISED
as complying with the Florida
Building Code
Acceptance No 11-1031.05
Expiration Date 9/22/15
By Ishaq I. Chanda
Miami Dade Product Control

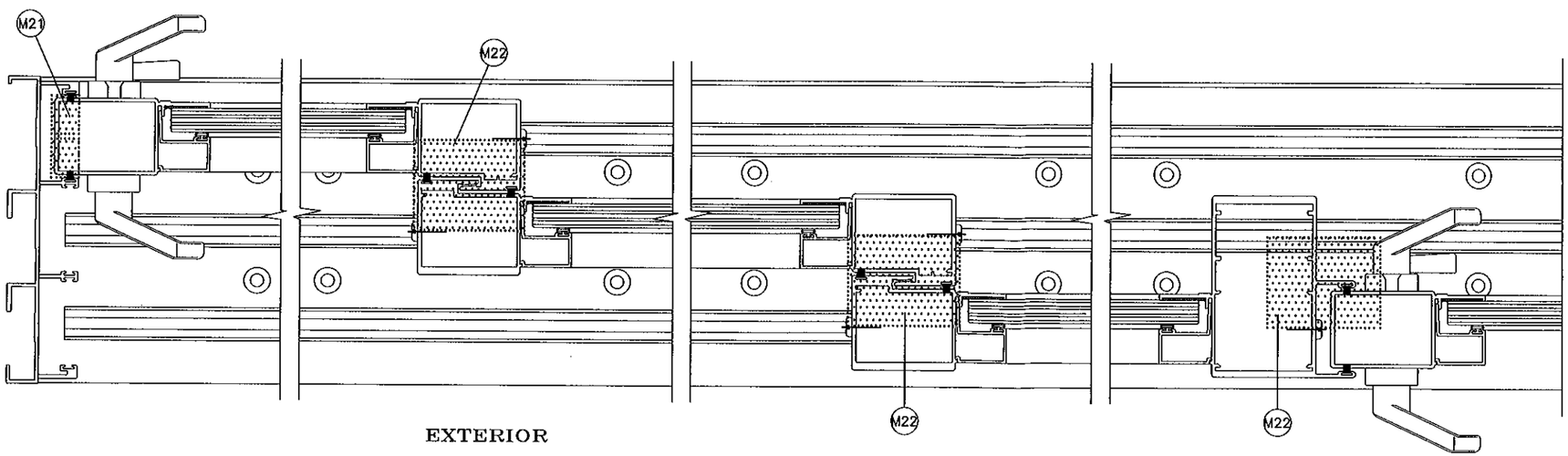

EXTERIOR

Engr: JAVAD AHMAD
CIVIL
FLA. PE # 70592
C.A.N. 3538

OCT 10 2011

AL-FAROOQ CORPORATION
ENGINEERS & PRODUCT DEVELOPMENT
1235 S.W. 87 AVE
MIAMI, FLORIDA 33174
TEL. (305) 264-8100 FAX. (305) 262-6978
COMP-ANL\W10-31CGI

SERIES 150 SENTINEL ALUM SLIDING GLASS DOOR (L.M.I./S.M.I.)

CGI WINDOWS & DOORS
10100 N.W. 25TH STREET
MIAMI, FL. 33172
TEL. (305) 593-6590 FAX. (305) 593-6592

revisions:

no	date	by	description
A	08.17.10		REV. PER BCCO COMMENTS
B	02.18.11		NO CHANGE THIS SHEET
C	04.29.11		REV. PER BNC COMMENTS
D	10.10.11		NO CHANGE THIS SHEET

date: 05-20-10
scale: 3/8" = 1"
dr. by:
chk. by:

drawing no.
W10-31

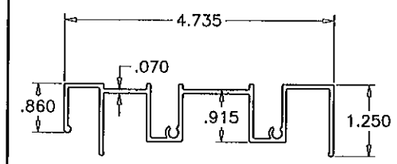

E3 FRAME HEAD (2 TRACK)

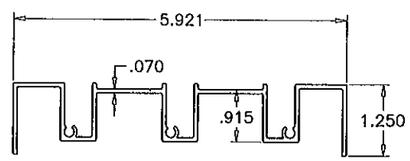

E13 FRAME HEAD (3 TRACK)

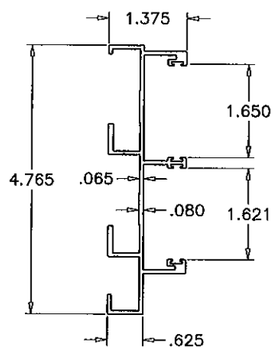

E2 FRAME JAMB (2 TRACK)

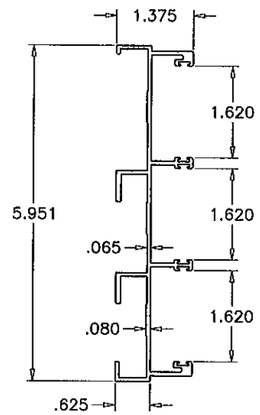

E12 FRAME JAMB (3 TRACK)

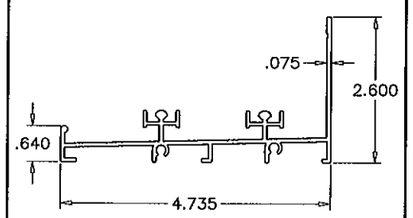

E1 FRAME SILL (2 TRACK)

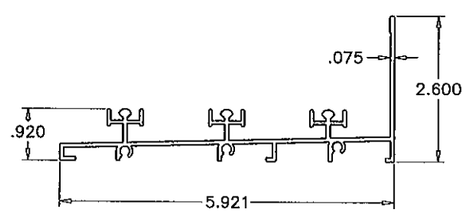

E11 FRAME SILL (3 TRACK)

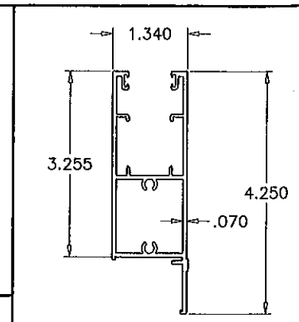

E7 TOP/BOTTOM HORIZ

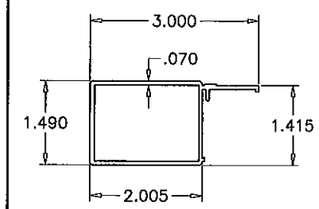

E6 MAIN STILE

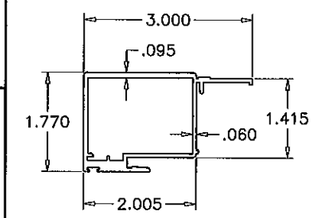

E5 INTERIOR INTERLOCK

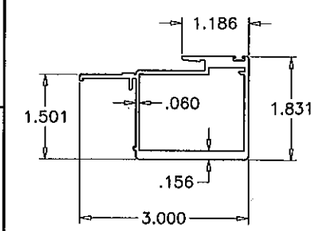

E4 EXTERIOR INTERLOCK

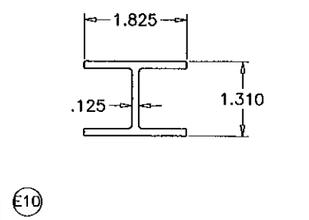

E10 INTERLOCK REINFORCING

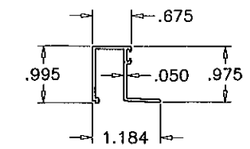

E16 GLAZING BEAD LAM. GLASS

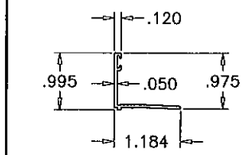

E17 GLAZING BEAD INSUL. LAM. GLASS

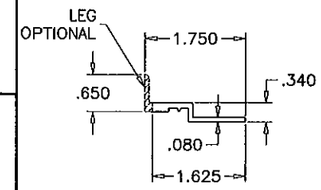

M2 FIX. PANEL CLIP

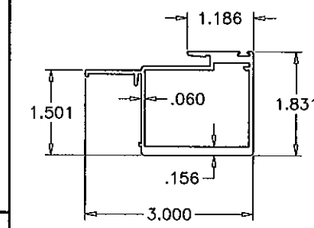

E18 EXTERIOR INTERLOCK (OPTIONAL)

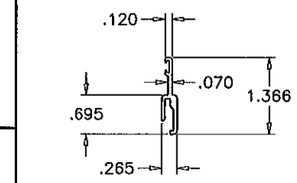

E8 SILL RISER (OPTIONAL)

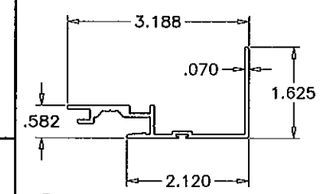

E15 POCKET HOOK

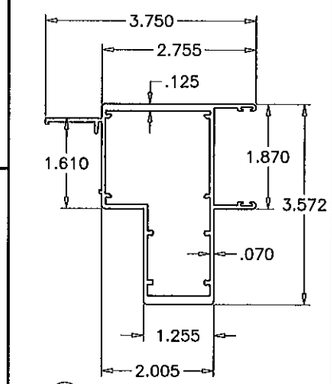

E22 ASTRAGAL (OPTIONAL)

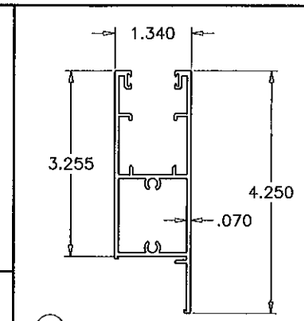

E21 TOP/BOTTOM HORIZ (OPTIONAL)

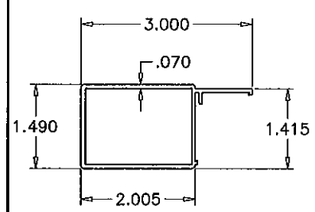

E20 MAIN STILE (OPTIONAL)

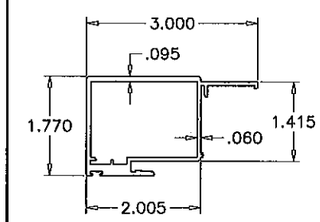

E19 INTERIOR INTERLOCK (OPTIONAL)

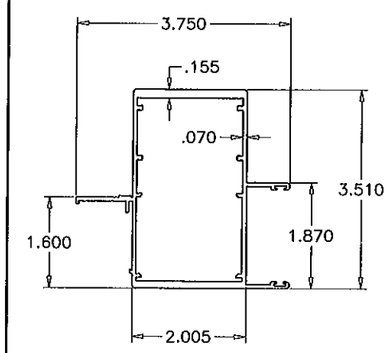

E14 OUTER TRACK ASTRAGAL STILE

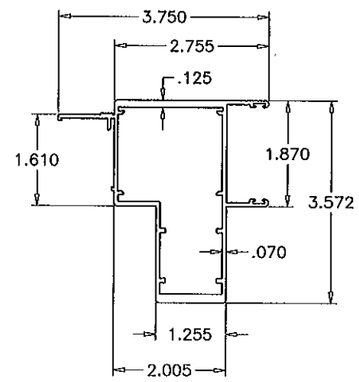

E9 ASTRAGAL STILE

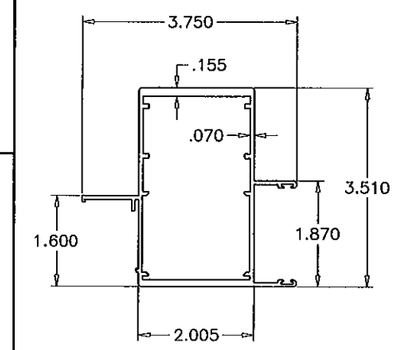

E23 OUTER TRACK ASTRAGAL (OPTIONAL)

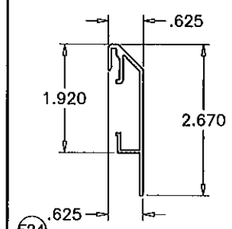

E24 SILL COVER(OPTIONAL)

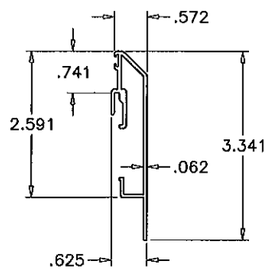

E8.1 SILL RISER (OPTIONAL)

Engr: JAVAD AHMAD
CIVIL
FLA. PE # 70592
C.A.N. 3538

OCT 10 2011

PRODUCT REVISED
as complying with the Florida Building Code
Acceptance No. 11-1031.05
Registration Date 9/22/11
By Ishwar J. Chant
Miami Dade Product Control

AL-FAROOQ CORPORATION
ENGINEERS & PRODUCT DEVELOPMENT
1235 S.W. 87 AVE
MIAMI, FLORIDA 33174
TEL. (305) 264-8100 FAX. (305) 262-6978
COMP-ANL\W10-31CGI

SERIES 150 SENTINEL ALUM SLIDING GLASS DOOR (L.M.I./S.M.I.)

CGI WINDOWS & DOORS
10100 N.W. 25TH STREET
MIAMI, FL. 33172
TEL. (305) 593-6590 FAX. (305) 593-6592

revisions:

no	date	by	description
A	08.17.10		NO CHANGE THIS SHEET
B	02.18.11		OPTIONAL SILL RISER ADDED
C	04.29.11		NO CHANGE THIS SHEET
D	10.10.11		NO CHANGE THIS SHEET

date: 05-20-10
scale: 3/8" = 1"
dr. by:
chk. by:

drawing no.
W10-31

sheet 14 of 16

CODE	PART No.	DESCRIPTION	MATERIAL	MANUF.	REMARKS
E1	CGI-150	FRAME SILL 2 TRACK	6063-T6	CGI EXTRUDER	–
E2	CGI-151	FRAME JAMB 2 TRACK	6063-T6	CGI EXTRUDER	–
E3	CGI-152	FRAME HEAD 2 TRACK	6063-T6	CGI EXTRUDER	–
E4	CGI-153	EXTERIOR INTERLOCK	6063-T6	CGI EXTRUDER	–
E5	CGI-154	INTERIOR INTERLOCK	6063-T6	CGI EXTRUDER	–
E6	CGI-155	MAIN STILE	6063-T6	CGI EXTRUDER	–
E7	CGI-156	TOP & BOTTOM HORIZ	6063-T6	CGI EXTRUDER	–
E8	CGI-157	SILL RISER	6063-T6	CGI EXTRUDER	–
E8.1	CGI-181	ALT. SILL RISER(OPTIONAL)	6063-T6	CGI EXTRUDER	–
E9	CGI-158	ASTRAGAL	6063-T6	CGI EXTRUDER	–
E10	CGI-159	INTERLOCK REINFORCING	6063-T6	CGI EXTRUDER	–
E11	CGI-160	FRAME SILL 3 TRACK	6063-T6	CGI EXTRUDER	–
E12	CGI-161	FRAME JAMB 3 TRACK	6063-T6	CGI EXTRUDER	–
E13	CGI-162	FRAME HEAD 3 TRACK	6063-T6	CGI EXTRUDER	–
E14	CGI-168	OUTER-TRACK ASTRAGAL	6063-T6	CGI EXTRUDER	–
E15	CGI-170	POCKET HOOK	6063-T6	CGI EXTRUDER	–
E16	CGI-121	7/16" GLASS GLAZING BEAD	6063-T5	CGI EXTRUDER	–
E17	CGI-123	1" GLASS GLAZING BEAD	6063-T5	CGI EXTRUDER	–
E18	CGI-153A	EXTERIOR INTERLOCK (OPTIONAL)	6063-T6	CGI EXTRUDER	–
E19	CGI-154A	INTERIOR INTERLOCK (OPTIONAL)	6063-T6	CGI EXTRUDER	–
E20	CGI-155A	MAIN STILE (OPTIONAL)	6063-T6	CGI EXTRUDER	–
E21	CGI-156A	TOP & BOTTOM HORIZ (OPTIONAL)	6063-T6	CGI EXTRUDER	–
E22	CGI-158A	ASTRAGAL (OPTIONAL)	6063-T6	CGI EXTRUDER	–
E23	CGI-168A	OUTER-TRACK ASTRAGAL (OPTIONAL)	6063-T6	CGI EXTRUDER	–
E24	CGI-180	DECORATIVE SILL COVER (OPTIONAL)	6063-T6	CGI EXTRUDER	–
M1	CGI-382V	GLAZING BULB VINYL (DUROMETER 75-80 SHORE A)	PVC	–	–
M2	CGI-171	FIXED PANEL CLIP	ALUMINUM	–	2 @ FIXED PANEL
M3	CGI-173	FIXED PANEL SHIM	NYLON	–	2 PER FIXED PANEL
M10	CGI-176	FRAME HEAD ANTILIFT & PAD PILE	WOOL/NYLON	SULLIVAN	1 PER INTERLOCK/ASTR.
M11	W23201NG	PILE WITH CENTER FIN	WOOL	ULTRAFAB OR EQUIV.	–
M13	TA-51	ST/ST ROLLER	ST/ST	AMESBURY OR EQUIV.	2 PER PANEL
M14	SGD-500	MORTISE LOCK	ST/ST	SULLIVAN	ATTACHED TO SGD-503
M15	SGD-507	KEEPER	ZINC	SULLIVAN	INST. W/ 2 #10X3/4" PH
M16	SGD-503	RECESSED ADAPTOR	ZINC	SULLIVAN	INST. W/ 2 #10X3/4" FH
M17	SGD-5500	HANDLE SET	ZINC	SULLIVAN	–
M18	SM2300WH	HANDLE SET OPTIONAL	ZINC	SULLIVAN	–
M19	–	GE2000	SILICONE	GE	–
M20	CGI-177	PANEL TOP & BOTTOM DUST PILE	WOOL	SULLIVAN OR EQUIV.	4 PER PANEL
M21	CGI-174	HEAD AND SILL SMALL PILE PAD	WOOL	ULTRAFAB OR EQUIV.	VARIES INTERLOCK/ASTRAGAL
M22	CGI-175	SILL INTERLOCK PILE PAD	WOOL	ULTRAFAB OR EQUIV.	
S2	–	#10 X 1 1/4" LG. PHL. PH. SMS. ST/ST. ASSEMBLY SCREW	–	–	2 OR 3 PER CORNER

LOCK:

LOCK SYSTEM BY 'SULLIVAN' LOCATED AT MAIN STILE
AT 40" FROM BOTTOM
SS MORTISE LOCK (PART #SGD-500)
ZINC RECESSED ADAPTOR (PART #SGD-503)
ZINC HANDLE SET (PART #SM5500) & (PART #SM2300WH)
ZINC KEEPER (PART #SGD-507)

PRODUCT REVISED
In complying with the Florida
Building Code
Acceptance No. 11-1031.05
Expiration Date 9/22/15
By Ishaq I. Khan Jr.
Miami-Dade Product Control

Engr: JAVAD AHMAD
CIVIL
FLA. PE # 70592
C.A.N. 3538
OCT 10 2011

AL-FAROOQ CORPORATION
ENGINEERS & PRODUCT DEVELOPMENT
1235 S.W. 87 AVE
MIAMI, FLORIDA 33174
TEL. (305) 264-8100 FAX. (305) 262-6978

COMP-ANL\W10-31CGI

SERIES 150 SENTINEL ALUM SLIDING GLASS DOOR (L.M.I./S.M.I.)

CGI WINDOWS & DOORS
10100 N.W. 25TH STREET
MIAMI, FL. 33172
TEL. (305) 593-6590 FAX. (305) 593-6592

revisions:

no	date	by	description
A	08.17.10		REV. PER BCCO COMMENTS
B	02.18.11		OPTIONAL SILL RISER ADDED
C	04.29.11		NO CHANGE THIS SHEET
D	10.10.11		NO CHANGE THIS SHEET

date: 05-20-10
scale: 3/8" = 1"
dr. by:
chk. by:

drawing no.
W10-31

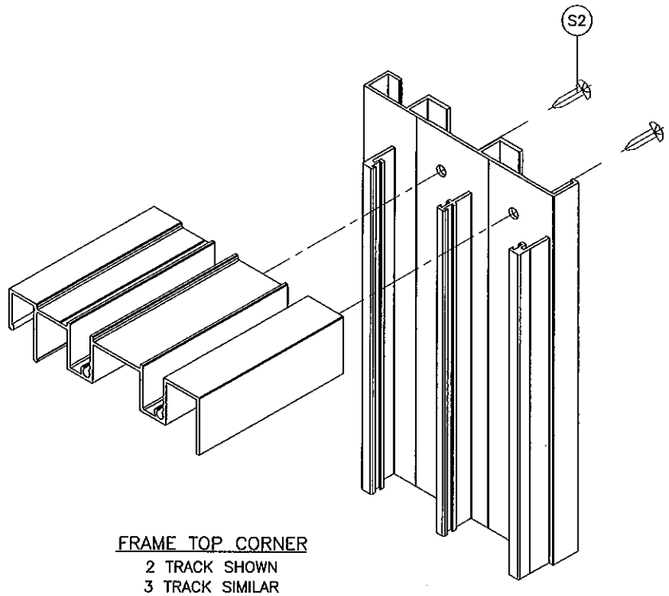

FRAME TOP CORNER
2 TRACK SHOWN
3 TRACK SIMILAR

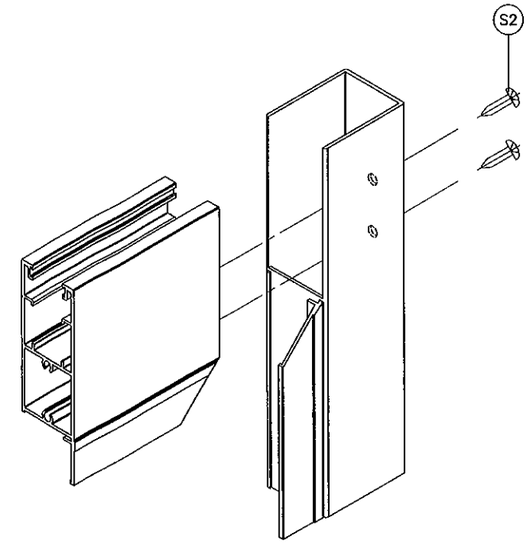

PANEL TOP/BOTTOM CORNER
MITERED BEAD CORNER (TYPICAL)

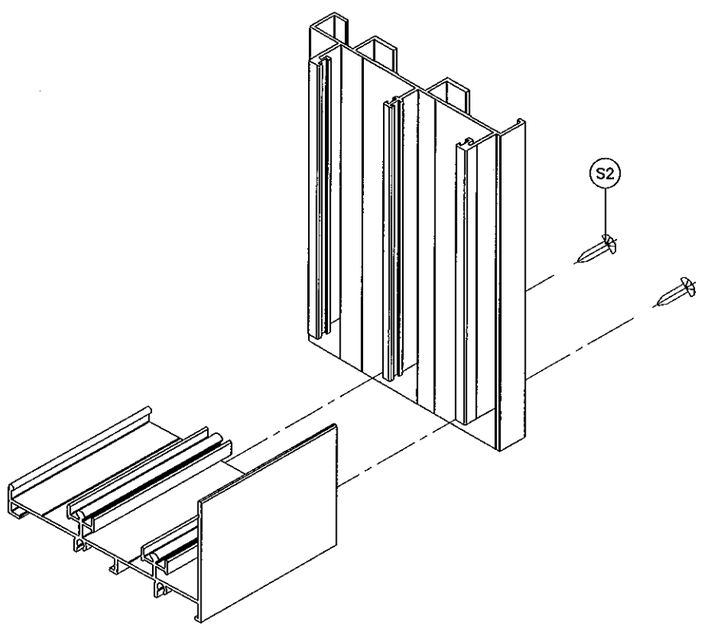

FRAME BOTTOM CORNER
2 TRACK SHOWN
3 TRACK SIMILAR

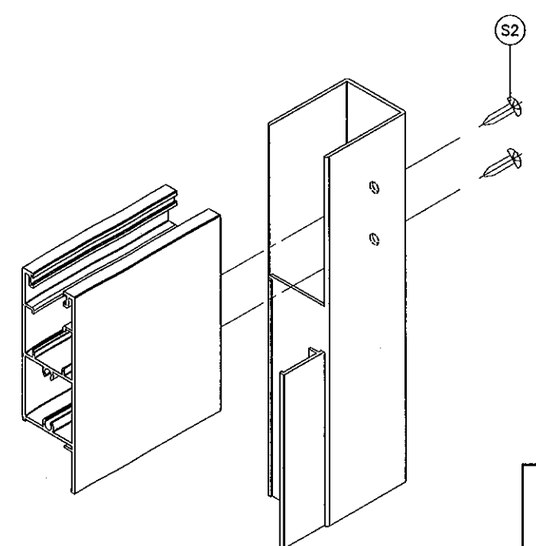

PANEL TOP/BOTTOM CORNER
SQUARE BEAD CORNER (OPTIONAL)

PRODUCT REVISED
as complying with the Florida Building Code
Acceptance No 11-1031.05
Expiration Date 09/22/2015
By Ishaq I. Chand
Miami Dade Product Control

Engr: JAVAD AHMAD
CIVIL
FLA. PE # 70592
C.A.N. 3538

OCT 10 2011

AL-FAROOQ CORPORATION
ENGINEERS & PRODUCT DEVELOPMENT
1235 S.W. 87 AVE
MIAMI, FLORIDA 33174
TEL. (305) 264-8100 FAX. (305) 262-6978
COMP-ANL\W10-31CGI

SERIES 150 SENTINEL ALUM SLIDING GLASS DOOR (L.M.I./S.M.I.)

CGI WINDOWS & DOORS
10100 N.W. 25TH STREET
MIAMI, FL. 33172
TEL. (305) 593-6590 FAX. (305) 593-6592

revisions:

no	date	by	description
A	08.17.10		NO CHANGE THIS SHEET
B	02.18.11		NO CHANGE THIS SHEET
C	04.29.11		NO CHANGE THIS SHEET
D	10.10.11		NO CHANGE THIS SHEET

date: 05-20-10
scale: 3/8" = 1"
dr. by:
chk. by:

drawing no.
W10-31