MIAMI-DADE COUNTY
DEPARTMENT OF PERMITTING, ENVIRONMENT, AND REGULATORY AFFAIRS (PERA)
BOARD AND CODE ADMINISTRATION DIVISION

MIAMI-DADE COUNTY
PRODUCT CONTROL SECTION
11805 SW 26 Street, Room 208
Miami, Florida 33175-2474
T (786) 315-2590 F (786) 315-2599
www.miamidade.gov/pera/

NOTICE OF ACCEPTANCE (NOA)

Trulite Glass & Aluminum Solution, LLC
800 Fairway Drive, Suite # 200
Deerfield Beach, Fl. 33441

SCOPE:

This NOA is being issued under the applicable rules and regulations governing the use of construction materials. The documentation submitted has been reviewed and accepted by Miami-Dade County PERA -Product Control Section to be used in Miami Dade County and other areas where allowed by the Authority Having Jurisdiction (AHJ).

This NOA shall not be valid after the expiration date stated below. The Miami-Dade County Product Control Section (In Miami Dade County) and/or the AHJ (in areas other than Miami Dade County) reserve the right to have this product or material tested for quality assurance purposes. If this product or material fails to perform in the accepted manner, the manufacturer will incur the expense of such testing and the AHJ may immediately revoke, modify, or suspend the use of such product or material within their jurisdiction. PERA reserves the right to revoke this acceptance, if it is determined by Miami-Dade County Product Control Section that this product or material fails to meet the requirements of the applicable building code.
This product is approved as described herein, and has been designed to comply with the Florida Building Code, including the High Velocity Hurricane Zone.

DESCRIPTION: NI Series "Wide Stile" Outswing Aluminum Entrance Door w/wo Transom – N.I.

APPROVAL DOCUMENT: Drawing No. **11-188**, titled "NI Series Wide Stiles Aluminum Outswing Door Non-Impact", sheets 1 through 9 of 9, dated 10/10/11 and last revised on MAR 21, 2012, prepared by EngCo Inc., signed and sealed by Pedro De Figueiredo, P.E., bearing the Miami-Dade County Product Control Revision stamp with the Notice of Acceptance number and expiration date by the Miami-Dade County Product Control Section.

MISSILE IMPACT RATING: None, approved Hurricane Protection Devices, complying w/ FBC required

Limitation:

1. See applicable Design Pressure & hardware options in sheet 2.
2. Storefront & Curtain Wall System is under separate NOA(s), when mulled lower capacity of door or system shall control. Mullion loads & installation anchors to be reviewed by Building official.

LABELING: Each unit shall bear a permanent label with the manufacturer's name or logo, city, state and series and following statement: "Miami-Dade County Product Control Approved", unless otherwise noted herein.

RENEWAL of this NOA shall be considered after a renewal application has been filed and there has been no change in the applicable building code negatively affecting the performance of this product.

TERMINATION of this NOA will occur after the expiration date or if there has been a revision or change in the materials, use, and/or manufacture of the product or process. Misuse of this NOA as an endorsement of any product, for sales, advertising or any other purposes shall automatically terminate this NOA. Failure to comply with any section of this NOA shall be cause for termination and removal of NOA.

ADVERTISEMENT: The NOA number preceded by the words Miami-Dade County, Florida, and followed by the expiration date may be displayed in advertising literature. If any portion of the NOA is displayed, then it shall be done in its entirety.

INSPECTION: A copy of this entire NOA shall be provided to the user by the manufacturer or its distributors and shall be available for inspection at the job site at the request of the Building Official.
This NOA **revises & renews NOA # 06-1129.01** (former Arch Aluminum & Glass Company, Inc.) and consists of this page 1 and evidence pages E-1, as well as approval document mentioned above.

The submitted documentation was reviewed by **Ishaq I. Chanda, P.E.**

MIAMI-DADE COUNTY APPROVED
3/27/12

NOTICE OF ACCEPTANCE: EVIDENCE SUBMITTED

A. DRAWINGS

1. Manufacturer's die drawings and sections (transferred from file # **06-1129.01**)
2. Drawing No. **11-188**, titled "NI Series Medium Stiles Aluminum Outswing Door Non-Impact", sheets 1 through 9 of 9, dated 10/10/11 and last revised on MAR 21, 2012, prepared by EngCo Inc., signed and sealed by Pedro De Figueiredo, P.E.

B. TESTS (transferred from file # **06-1129.01**)

1. Test reports on 1) Air Infiltration Test, per FBC, TAS 202-94
   2) Uniform Static Air Pressure Test, Loading per FBC, TAS 202-94
   3) Water Resistance Test, per FBC, TAS 202-94 (Not performed)
   4) Forced Entry Test, per FBC 2411 3.2.1 and TAS 202-94

   Along with installation diagram of wide stile aluminum out-swinging entrance door with Transom light prepared by Fenestration Testing Laboratory, Inc., Test Report No. **FTL-1572**, dated 10/16/06, signed and sealed by Edmundo Largaespada, P.E.
2. Additional test per TAS 202-94: Test report No. FTL **1802** dated 10/14/1997, issued by Fenestration Testing Laboratory, Inc, signed and sealed by late Gill Diamond, P. E.

C. CALCULATIONS

1. Anchor verification calculations and structural analysis, complying with FBC-2007 & 2010, prepared by Engco Inc., dated 11/07/11 and last revised on MAR 21, 2012, signed and sealed by Pedro DeFigueiredo, P.E.
2. Glazing complies w/ ASTME-1300-02 & -04

D. QUALITY ASSURANCE

1. Miami Dade Department of Permitting, Environment, and Regulatory Affairs (PERA).

E. MATERIAL CERTIFICATIONS

1. None.

F. STATEMENTS

1. Statement letter of conformance and no financial interest, prepared by Engco Inc., dated 10/27/11, signed and sealed by Pedro DeFigueiredo, P.E.
2. Statement letter of Lab compliance, part of above referenced test reports.
3. Certificate of name change amendment dated 07-27-11, issued by The State of Delaware for Arch Aluminum Glass, LLC to Trulite Glass & Aluminum Solution, LLC, signed by Jeffery W. Bullock, Secretary of State.
4. Florida Dept of State, listing dated 02/03/10 of Trulite Glass & Aluminum Solution, LLC (Foreign Ltd. Liability Co.), managed by Arch Intermediate Holding, LLC, Tamarac, Fl.

G. OTHER

1. This NOA **revises & renews** NOA # **06-1129.01**, expired on Dec 31, 2011.
2. Die Drawings AGA 36 (1060Trulite), AGA 37 (1061Trulite) & A-9342.
3. Test Proposal # **06-0273** and test proposal dated 08-14-06, approved by BCCO.
4. Arch new company formation article in Glass magazine, dated July 21, 2011.

Ishaq I. Chanda

Ishaq I. Chanda, P.E.
Product Control Examiner
NOA No 11-1101.02
Expiration Date: December 31, 2016
Approval Date: March 29, 2012

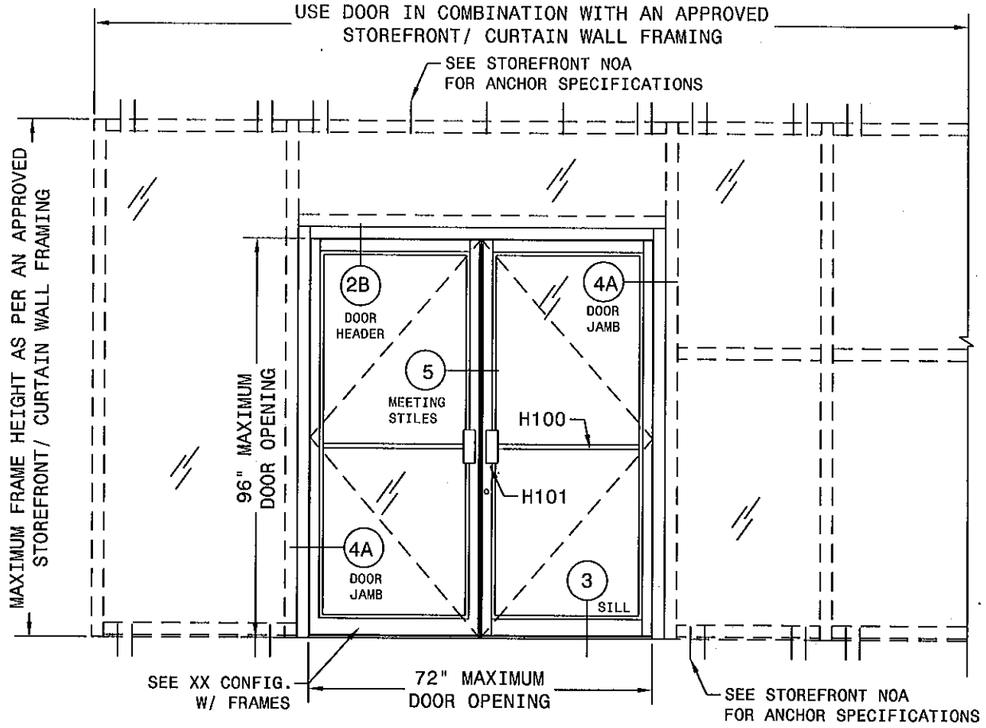

XX OR X DOOR W/ FRAMES IN COMBINATION WITH AN APPROVED STOREFRONT SYSTEM

TYPICAL ELEVATIONS

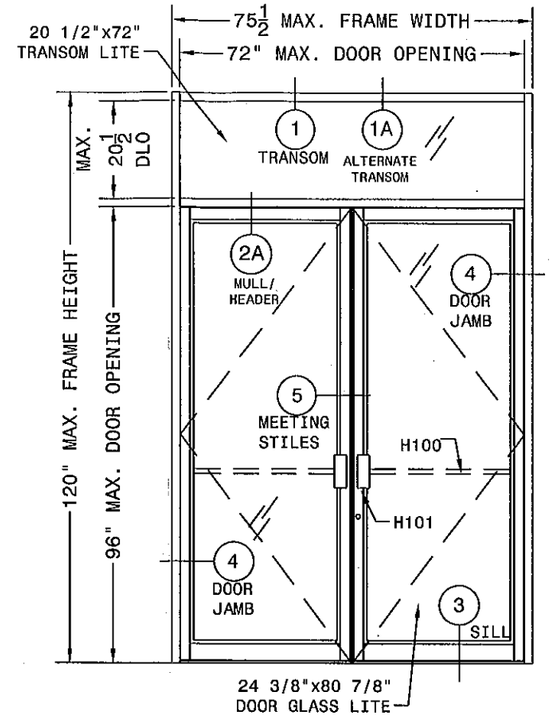

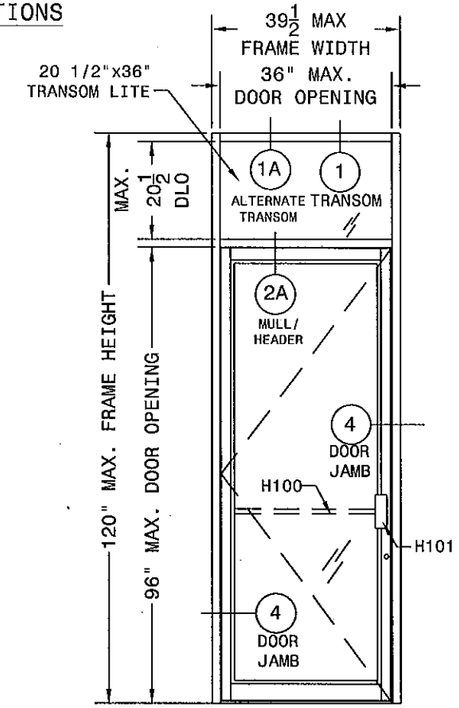

O/XX OR O/X - PAIR OR SINGLE DOOR WITH TRANSOM
SEE TABLE 1B, SHEET 2 FOR DESIGNED PRESSURES

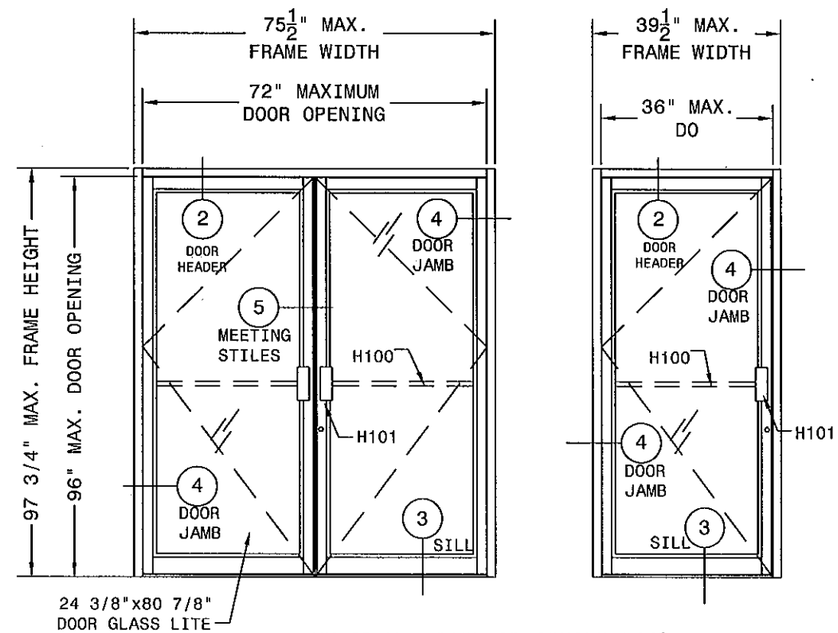

XX OR X - PAIR OR SINGLE DOOR
SEE TABLE 1A, SHEET 2 FOR DESIGNED PRESSURES

GENERAL NOTES:

1. CODE: THIS PRODUCT HAS BEEN TESTED AND DESIGNED IN ACCORDANCE WITH THE FLORIDA BUILDING CODE 2007/2010 EDITION INCLUDING THE HIGH VELOCITY HURRICANE ZONE (HVHZ)
2. DEFINITION: THIS PRODUCT IS A NON IMPACT ALUMINUM OUTSWING DOOR. - WIDE STILE MODEL
3. LIMITATIONS:
   - 3.1. 3.1- THE USE OF THIS PRODUCT WILL REQUIRE APPROVED IMPACT RESISTANT HURRICANE SHUTTERS AS PER FBC, AS APPLICABLE..
   - 3.2. 3.2- DOORS ARE NOT TO BE USED WHERE WATER INFILTRATION REQUIREMENTS MUST BE MET.
   - 3.3. 3.3- DESIGNED PRESSURES MUST NOT EXCEED THE ALLOWABLE DESIGN RATE ON TABLES 1A OR 1B ON SHEET 2.
4. LABELING: EACH UNIT SHALL BEAR A PERMANENT LABEL WITH THE MANUFACTURER'S NAME OR LOGO, CITY, STATE AND THE FOLLOWING STATEMENT: "MIAMI-DADE COUNTY PRODUCT CONTROL APPROVED"
5. DESIGN LOADS: LOADS MUST BE CALCULATED BY A PROFESSIONAL ARCHITECT OR ENGINEER FOR EACH SPECIFIC PROJECT.
6. MATERIAL: ALL ALUMINUM PARTS TO BE 6063-T5 OR AS INDICATED AND GLAZING TO BE 3/16" OR 1/4" TEMPERED GLASS FOR DOOR LITES AND 1/4" FOR TRANSOM AS SPECIFIED IN THIS APPROVAL.
7. FASTENERS: ASSEMBLY SCREWS AND ANCHORS SHALL BE AS SPECIFIED IN THIS CURRENT SET OF DRAWINGS.
8. USE: IT SHALL BE THE RESPONSIBILITY OF THE CONTRACTOR, ARCHITECT OR ENGINEER OF RECORD TO VERIFY THE FOLLOWING:
   - 8.1. THE STABILITY OF THE STRUCTURE WHERE THE UNIT IS TO BE ATTACHED INSURING PROPER ANCHORAGE.
   - 8.2. THE SITE SPECIFIC PROJECT CRITERIA, SUCH AS BUT NOT LIMITED TO, LOCAL CODE REQUIREMENTS, DESIGNED PRESSURES ETC.
   - 8.3. THAT THIS APPROVAL IS ADEQUATE TO THE SPECIFIC PROJECT.
9. MATERIALS, INCLUDING BUT NOT LIMITED TO STEEL/ METAL SCREWS, THAT COME INTO CONTACT WITH OTHER DISSIMILAR MATERIALS SHALL MEET THE REQUIREMENTS OF FBC SECTION 2003.8.4.

USER INSTRUCTIONS:

1. DETERMINE PROJECT DESIGN WIND LOAD PRESSURES (Pd) AS PER ITEM 5 OF GENERAL NOTES, SHEET 1.
2. VERIFY IF MAXIMUM DOOR ALLOWABLE PRESSURE AS PER TABLE 1A OR 1B ON SHEET 2 IS GREATER THAN Pd.
3. INCORPORATE A VALID NOTICE OF ACCEPTANCE FOR THE FRAMING WHEN DOORS ARE TO BE PART OF A STOREFRONT OR CURTAIN WALL ELEVATION.

ILLUSTRATION "Z"

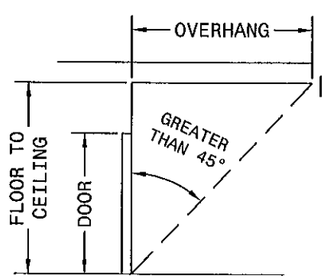

NOTES:
1- UNITS MUST BE INSTALLED AT LOCATIONS PROTECTED BY A OVERHANG MEETING CRITERIA AS PER ILLUSTRATION "Z" OR IN NON-HABITABLE AREAS WHERE WATER INFILTRATION IS ACCEPTABLE.

Trulite
GLASS & ALUMINUM SOLUTIONS™
http://www.trulite.com
800 FAIRWAY DRIVE, Suite 200
DEERFIELD BEACH, FL 33441
p. 800-432-8132 | f. 954-724-2083

PRODUCT:

N.I. SERIES WIDE STILE
ALUMINUM OUTSWING DOOR, NON-IMPACT

Resistor PRODUCT SERIES

REVN	DATE/REMARKS

ENGINEER:
EngCo Inc.
CA 8116
5595 ORANGE DRIVE SUITE 201
DAVIE, FL. 33314
ENGCO@AOL.COM

PEDRO M. DE FIGUEIREDO LICENSE No. 52609 STATE OF FLORIDA PROFESSIONAL ENGINEER
MAR 21 2012

ENGINEER SEAL
PEDRO DE FIGUEIREDO
PE 52609

PRODUCT CONTROL APPROVAL:

PRODUCT REVISED
to complying with the Florida Building Code
Acceptance No. 11-1101.02
Expiration Date DEC 31, 2016
By Ishag I. Llanes
Miami Dade Product Control

DRAWN: TRULITE	DRAWING No:
DATE: 10.10.11	1 OF 9
DWG: 11-189	

HARDWARE OPTIONS (PACKAGE)

	OPTION 1		OPTION 2		OPTION 3	
	DESIGN CONTROLLED BY PRESSURES ON TABLES 1A AND 1B OPTION 1		DESIGN CONTROLLED BY PRESSURES ON TABLES 1A AND 1B OPTION 2		DESIGN CONTROLLED BY PRESSURES ON TABLES 1A AND 1B OPTION 3	
HINGES PIVOTS	ALUMINUM ROTON HINGE	H40	ALUMINUM ROTON HINGE	H40	TOP & BOT. PIVOTS	H30
	TOP, MID & BOTTOM PIVOTS	H30 & H31	TOP, MID & BOTTOM PIVOTS	H30 & H31		
	4 1/2" BRASS BUT HINGES	H20	4 1/2" BRASS BUT HINGES	H20		
LOCKS	ACTIVE STILE: 3 POINT LOCK KEY OPERATED FROM EXTERIOR AND THUMB TURN ON INTERIOR	L13	NOT AVAILABLE		ACTIVE STILE: 1 POINT LOCK KEY OPERATED FROM EXTERIOR AND THUMB TURN ON INTERIOR OR OPTION 1	L11
	INACTIVE STILE TWO MANUALLY OPERATED FLUSH BOLTS OR	L12	NOT AVAILABLE		INACTIVE STILE: TWO MANUALLY OPERATED FLUSH BOLTS OR	L12
	2 POINT LOCK OPERATED ON INTERIOR W/ THUMB TURN	L14			2 POINT LOCK OPERATED ON INTERIOR W/ THUMB TURN	
PANIC DEVICES	NOT AVAILABLE		ACTIVE AND INACTIVE STILES: 2 POINT LOCK OPERATED ON INTERIOR W/ 2086 PANIC DEVICE AND KEY ON EXTERIOR	L10	ACTIVE AND INACTIVE STILES: ALTERNATE 2 POINT LOCK OPERATED ON INTERIOR W/ 2086 PANIC DEVICE AND KEY ON EXTERIOR	L10

TABLE 1A - ALLOWABLE DESIGNED PRESSURES DOOR WITHOUT TRANSOM - SINGLE (X) & PAIR (XX)

DOW (IN)	DOH (IN)	DOOR PRESSURE (± PSF) OPTION 1	OPTION 2	OPTION 3
30 SINGLE	80	122.4	100.8	78.2
OR	84	116.6	96.0	74.5
60 PAIR	96	102.0	84.0	--
36 SINGLE	80	102.0	84.0	65.2
OR	84	97.1	80.0	62.1
72 PAIR	96	85.0	70.0	--
42 SINGLE	80	87.4	--	--
OR	84	83.3	--	--
84 PAIR				

NOTES:
1- DOW: DOOR OPENING WIDTH IN INCHES
2- DOH: DOOR OPENING HEIGHT IN INCHES
3- FH: FRAME FINISHED HEIGHT IN INCHES
4- FW: FRAME FINISHED WIDTH IN INCHES
5- FRAME HEIGHT= DOOR OPENING HEIGHT + 1 3/4"
6- FRAME WIDTH= DOOR OPENING WIDTH + 3 1/2"
7- DOOR DLO HEIGHT (DLOH)= DOOR OPENING - 15 1/8"
8- DOOR DLO WIDTH (DLOW)= SINGLE DOOR OPENING - 11 5/8"

TABLE 1B - ALLOWABLE DESIGNED PRESSURES DOOR WITH TRANSOM - SINGLE (O/X) & PAIR (O/XX)

DOW (IN)	DOH (IN)	FH (IN)	TH (IN)	DESIGN PRESSURE (± PSF) OPTION 1	OPTION 2	OPTION 3
30 OR 60	80	96	16	122.4	100.8	78.2
		104	24	85.0	70.0	78.2
		108	28	71.1	58.6	76.7
	84	96	12	116.6	96.0	74.5
		108	24	85.0	70.0	74.5
		112	28	71.1	58.6	74.5
	96	108	12	102.0	84.0	--
		120	24	85.0	70.0	--
36 OR 72	80	96	16	102.0	84.0	65.2
		100	20	102.0	84.0	65.2
		104	24	85.0	70.0	65.2
	84	96	12	97.1	80.0	62.1
		104	20	97.1	80.0	62.1
		108	24	85.0	70.0	62.1
	96	108	12	85.0	70.0	--
		120	24	85.0	70.0	--
42 OR 84	80	96	16	58.0	--	--
		101	21	54.6	--	--
	84	96	12	58.6	--	--
		105	21	52.5	--	--

NOTES:
1- DOW: DOOR OPENING WIDTH IN INCHES
2- DOH: DOOR OPENING HEIGHT IN INCHES
3- FH: FRAME FINISHED HEIGHT IN INCHES
4- FW: FRAME FINISHED WIDTH IN INCHES
5- TDLOW: TRANSOM DLO WIDTH = DOW
6- TDLOH: TRANSOM DLO HEIGHT = TH -3 1/2"
7- TH: TRANSOM HEIGHT (INCHES)

DOOR WITHOUT TRANSOM APPROVED CONFIGURATIONS

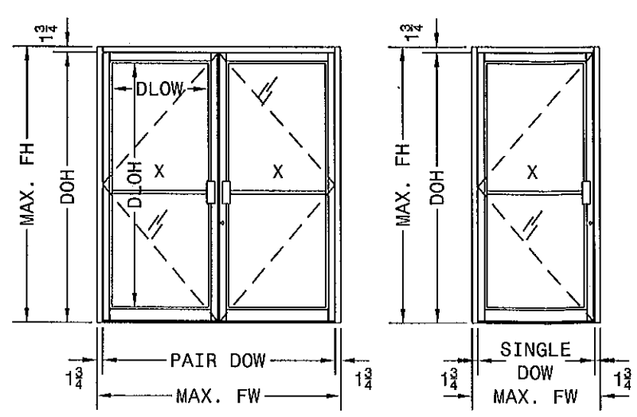

DOOR WITH TRANSOM APPROVED CONFIGURATIONS

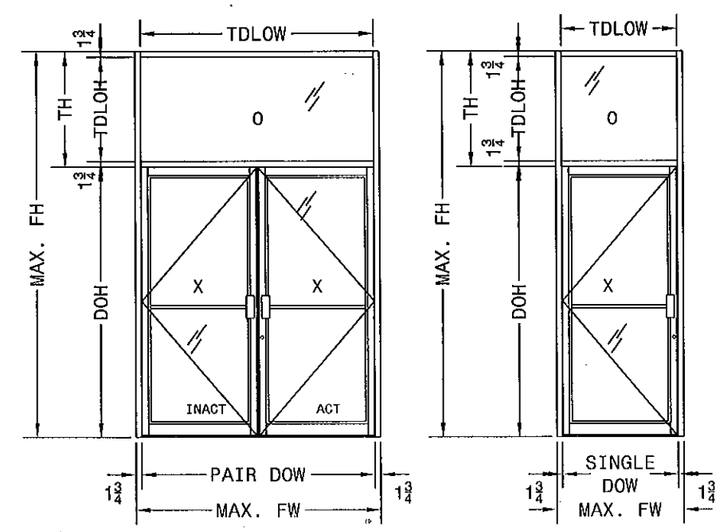

Trulite
GLASS & ALUMINUM SOLUTIONS™
http://www.trulite.com
800 FAIRWAY DRIVE, Suite 200
DEERFIELD BEACH, FL 33441
p. 800-432-8132 | f. 954-724-2083

PRODUCT:

N.I. SERIES WIDE STILE
ALUMINUM OUTSWING DOOR, NON-IMPACT

Resistor
BLAST & STORM PROTECTION™

REVN	DATE/REMARKS

ENGINEER:
EngCo Inc.
CA 8116
5595 ORANGE DRIVE SUITE 201
DAVIE, FL. 33314
ENGCO@AOL.COM

PEDRO M. DE FIGUEIREDO
LICENSE
No. 52609
STATE OF FLORIDA
PROFESSIONAL ENGINEER
MAR 21 2012
ENGINEER SEAL
PEDRO DE FIGUEIREDO
P.E. 52609

PRODUCT CONTROL APPROVAL:

PRODUCT REVISED
as complying with the Florida
Building Code
Acceptance No. 11-1101.02
Expiration Date 12/31/16
Miami Dade Product Control

DRAWN: TRULITE	DRAWING No:
DATE: 10.10.11	2 OF 9
DWG: 11-189	

GLAZING DETAILS

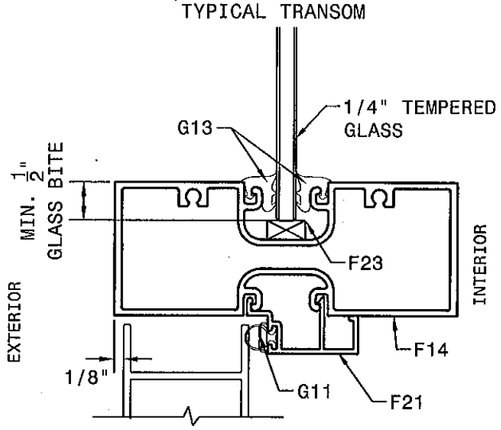

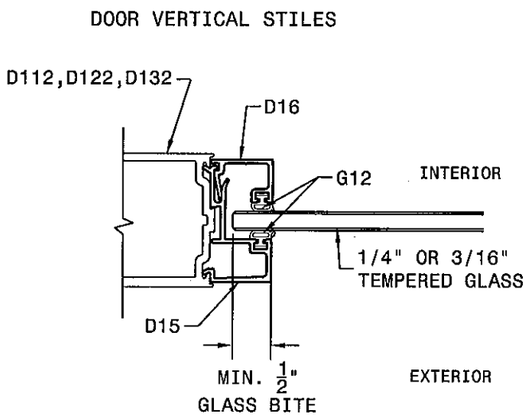

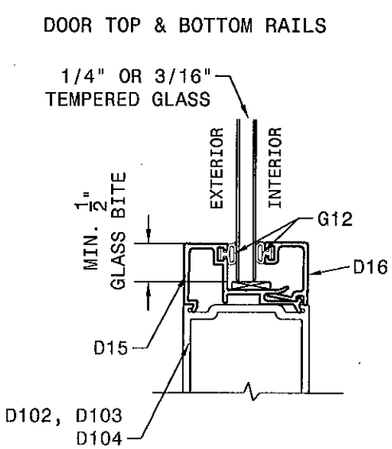

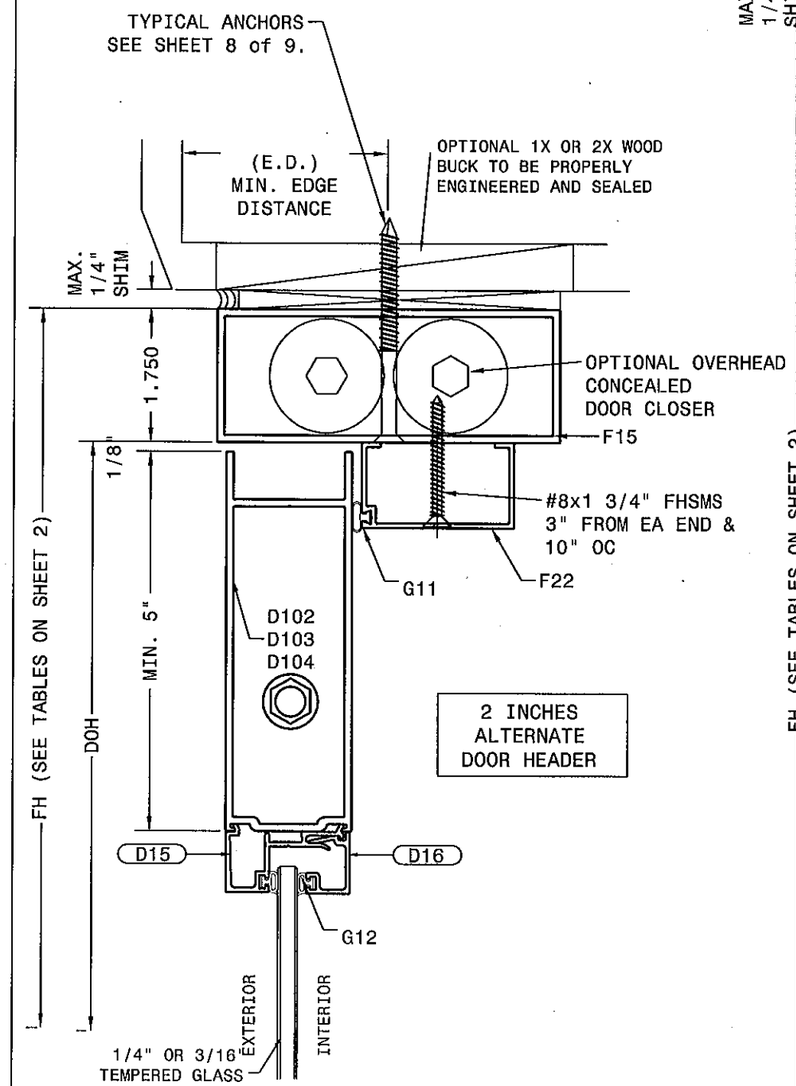

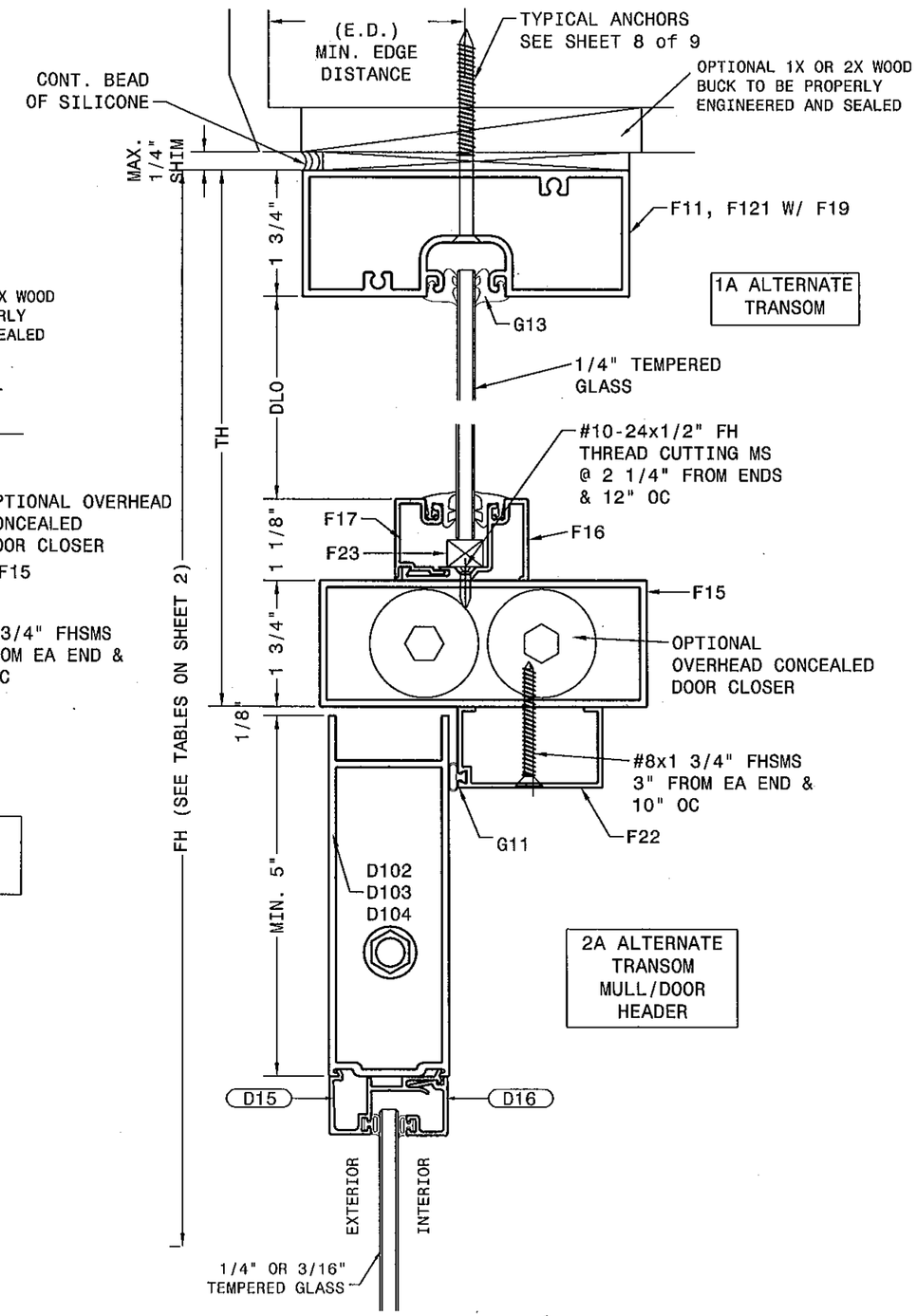

Trulite
GLASS & ALUMINUM SOLUTIONS™
http://www.trulite.com
800 FAIRWAY DRIVE, Suite 200
DEERFIELD BEACH, FL 33441
p. 800-432-8132 | f. 954-724-2083

PRODUCT:

N.I. SERIES WIDE STILE
ALUMINUM OUTSWING DOOR, NON-IMPACT

Resistor
BLAST & STORM PROTECTION™

REVN	DATE/REMARKS

ENGINEER:
EngCo Inc.
CA 8116
5595 ORANGE DRIVE SUITE 201
DAVIE, FL. 33314
ENGCO@AOL.COM

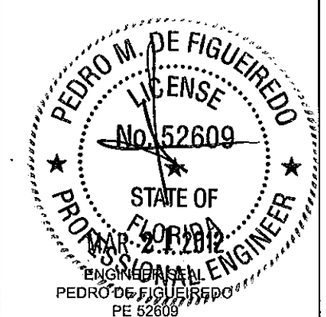

ENGINEER SEAL
PEDRO DE FIGUEIREDO
PE 52609

PRODUCT CONTROL APPROVAL:

PRODUCT REVISED
as complying with the Florida Building Code
Acceptance No. 11-1101.02
Expiration Date 12/31/16
By Ishag I. Chauhe
Miami Dade Product Control

DRAWN: TRULITE	DRAWING No:
DATE: 10.10.11	3 OF 9
DWG: 11-189	

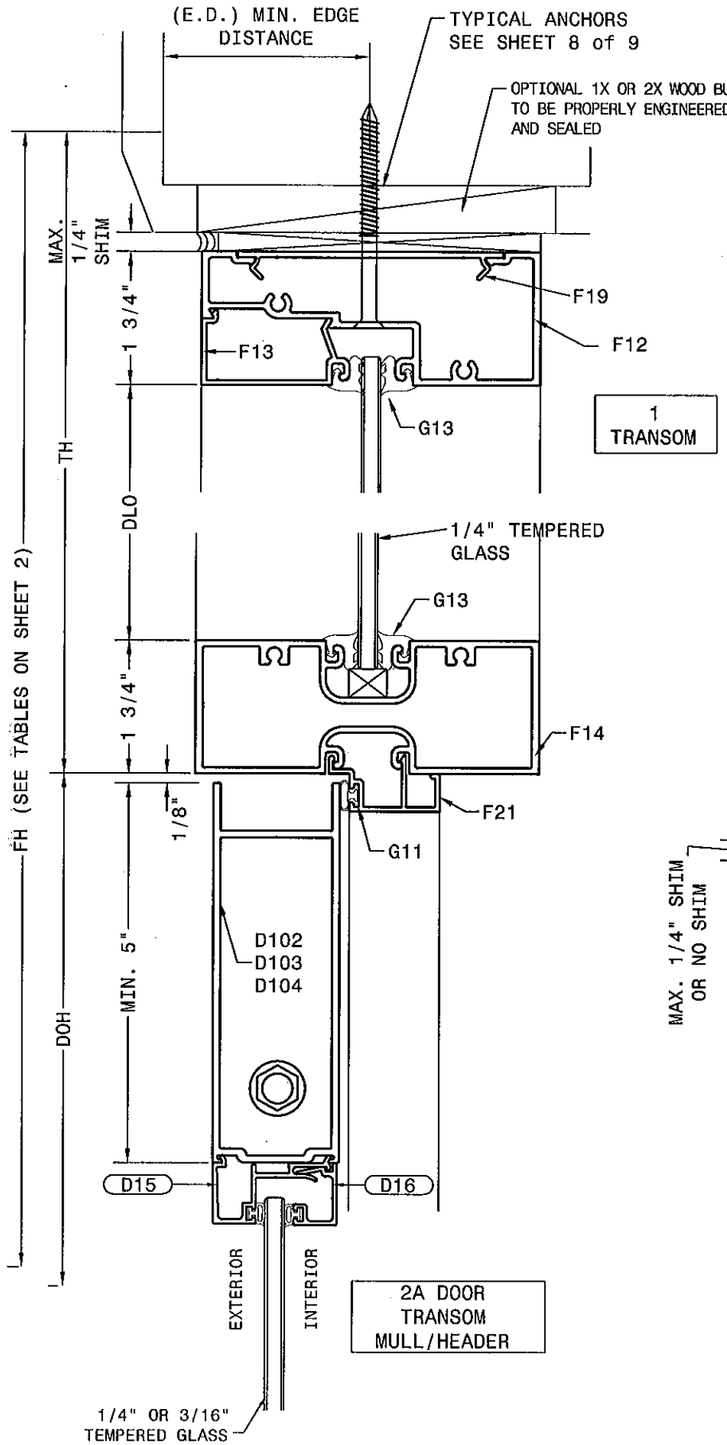

TYPICAL ANCHORS

- A- #14 SS WOOD SCREWS OR 1/4" ULTRACONS W/ 1 1/2" EMBED. INTO WOOD (SG=.55)
- B- 1/4" ULTRACONS BY ELCO OR ¼" TAPCONS BY ITW BUILDEX W/ 1 1/4" EMBED. INTO HOLLOW CMU OR 1 3/8" INTO 3000 PSI CONCRETE.
- C- 1/4-14 SELF DRILLING SCREWS INTO METAL STRUCTURES (1/8" MIN. 6063-T5 ALUMINUM OR ASTM A36 STEEL)

EDGE DISTANCES

- E.D.= 1" FOR WOOD
- E.D.= 2 1/2" FOR MASONRY AND CONCRETE
- E.D.= 3/4" FOR METAL

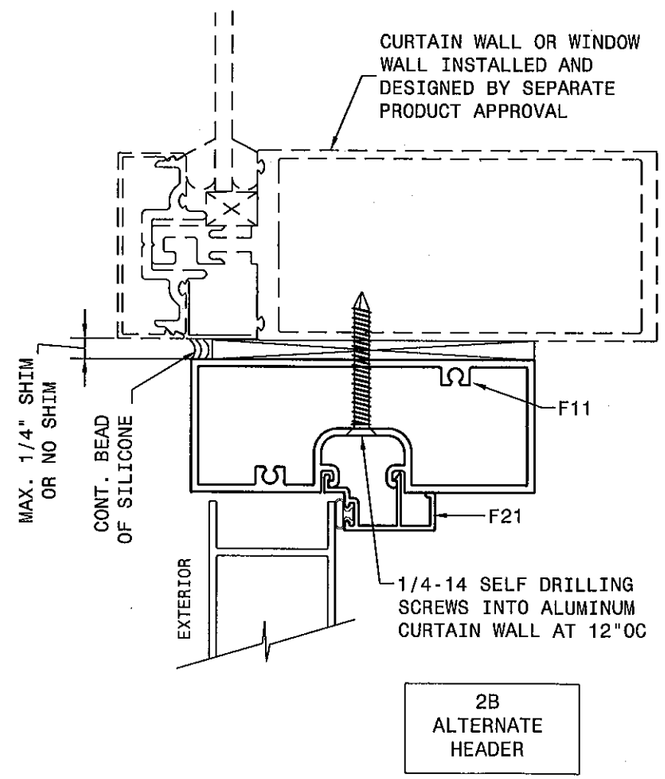

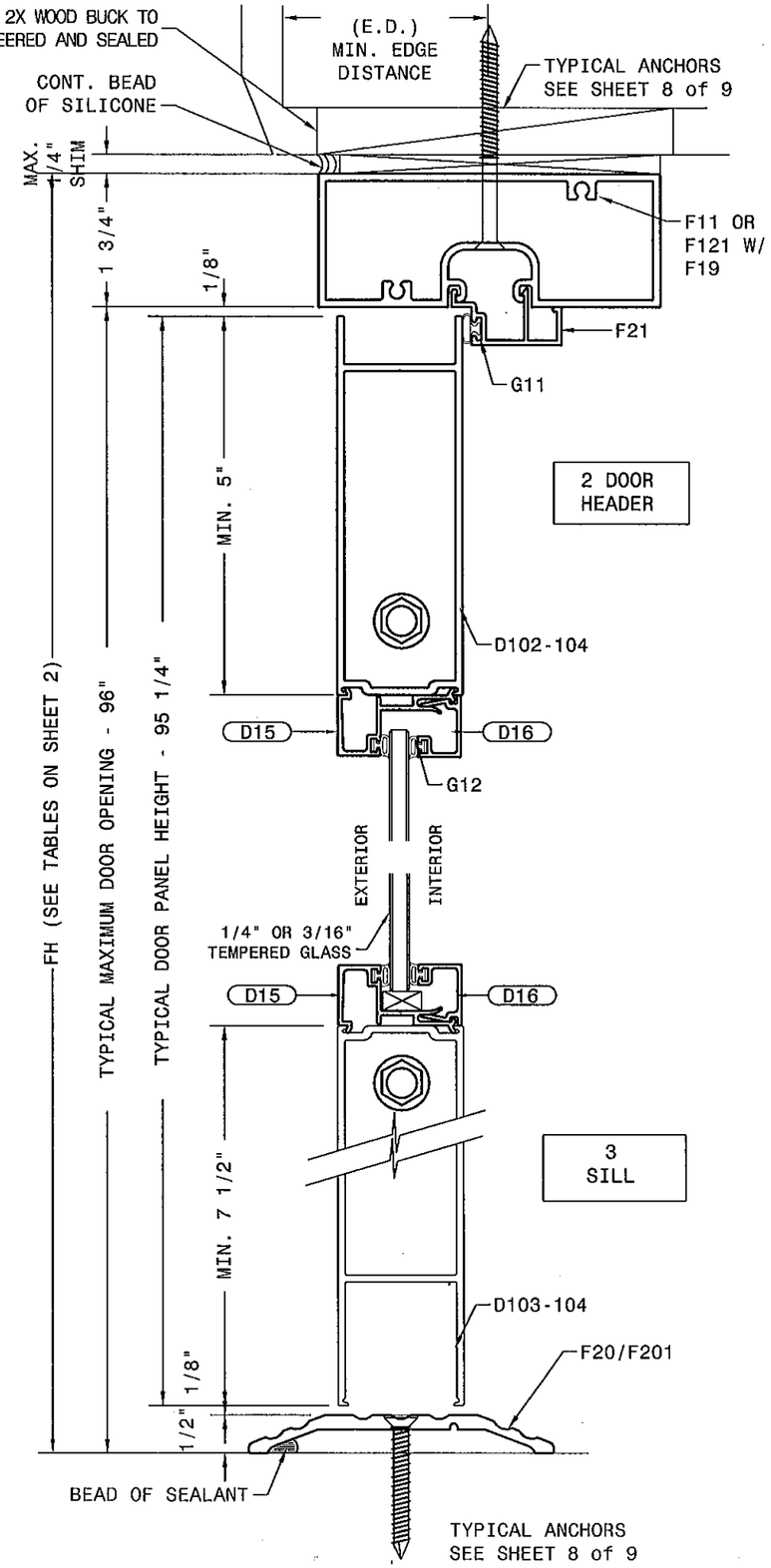

Trulite
GLASS & ALUMINUM SOLUTIONS™
http://www.trulite.com
800 FAIRWAY DRIVE, Suite 200
DEERFIELD BEACH, FL 33441
p. 800-432-8132 | f. 954-724-2083

PRODUCT:

N.I. SERIES WIDE STILE
ALUMINUM OUTSWING DOOR, NON-IMPACT

Resistor
BLAST & STORM PROTECTION™

REVN	DATE/REMARKS

ENGINEER:

EngCo Inc.
CA 8116
5595 ORANGE DRIVE SUITE 201
DAVIE, FL. 33314
ENGCO@AOL.COM

PEDRO M. DE FIGUEIREDO
LICENSE
No. 52609
STATE OF FLORIDA
MAR 21 2012
PROFESSIONAL ENGINEER
ENGINEER SEAL
PEDRO DE FIGUEIREDO
PE 52609

PRODUCT CONTROL APPROVAL:

PRODUCT REVISED
as complying with the Florida Building Code
Acceptance No. 11-1101-02
Expiration Date 12/31/16
By Ishaq I. Chaudhary
Miami Dade Product Control

DRAWN: TRULITE	DRAWING No:
DATE: 10.10.11	4 OF 9
DWG: 11-189	

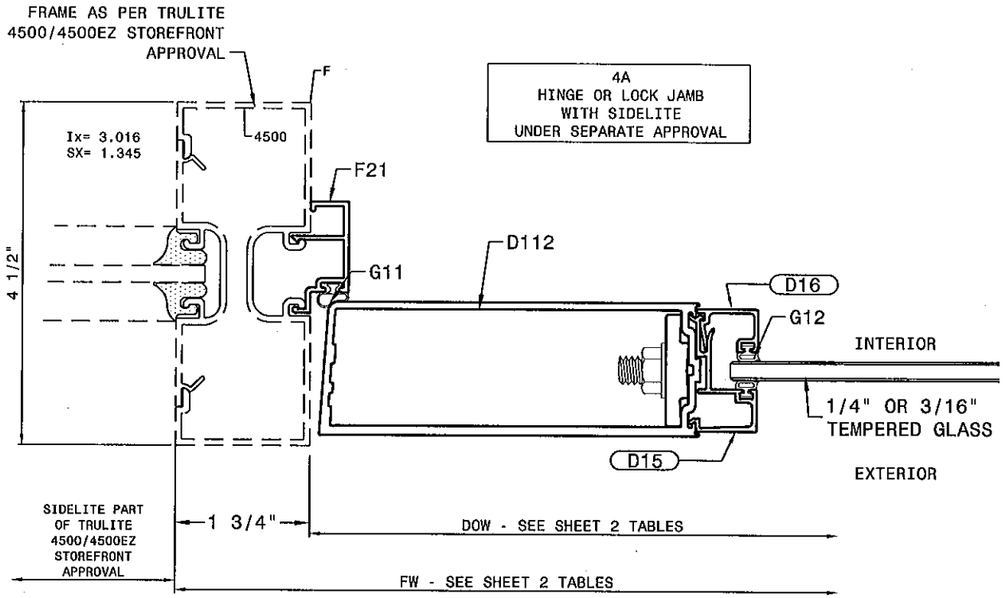

4A
HINGE OR LOCK JAMB
WITH SIDELITE
UNDER SEPARATE APPROVAL

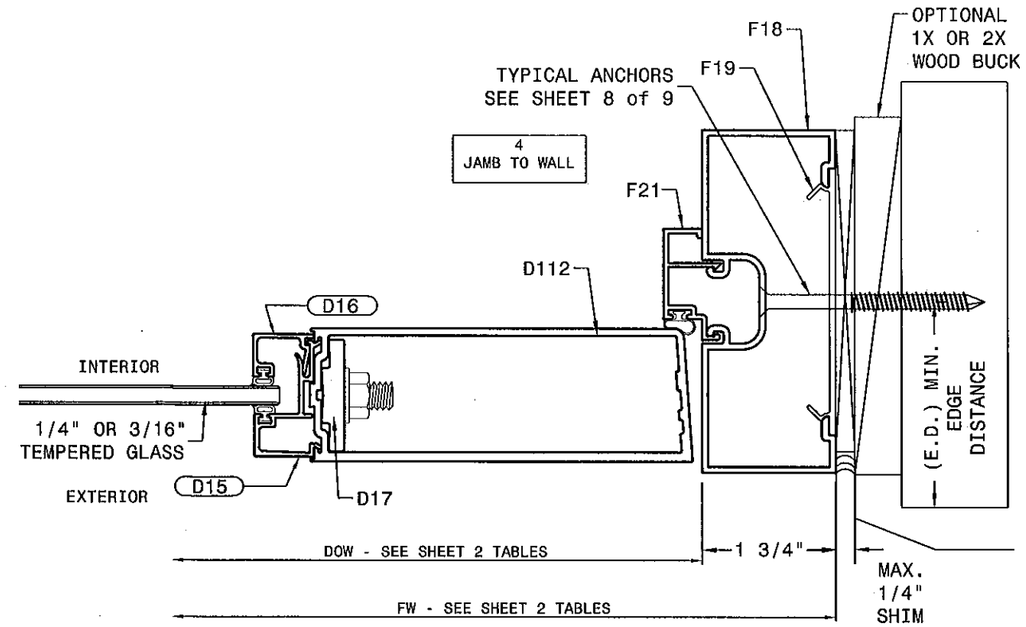

4
JAMB TO WALL

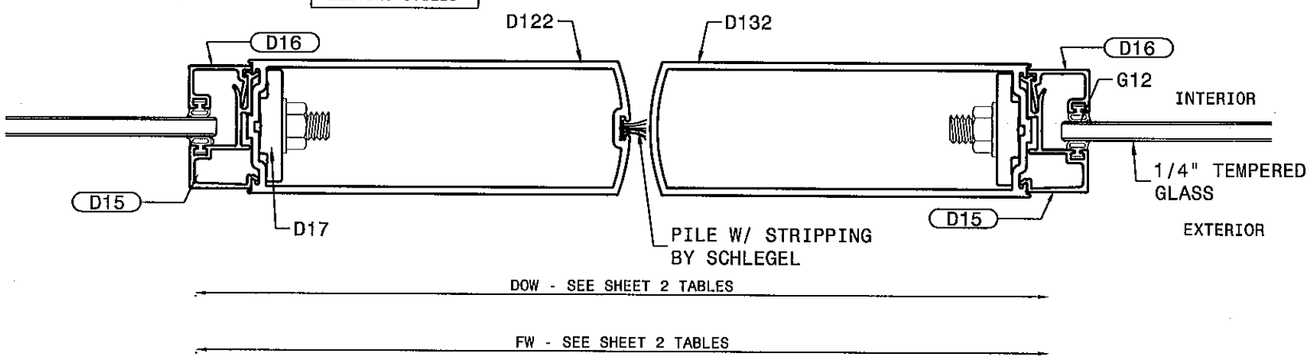

5
MEETING STILES

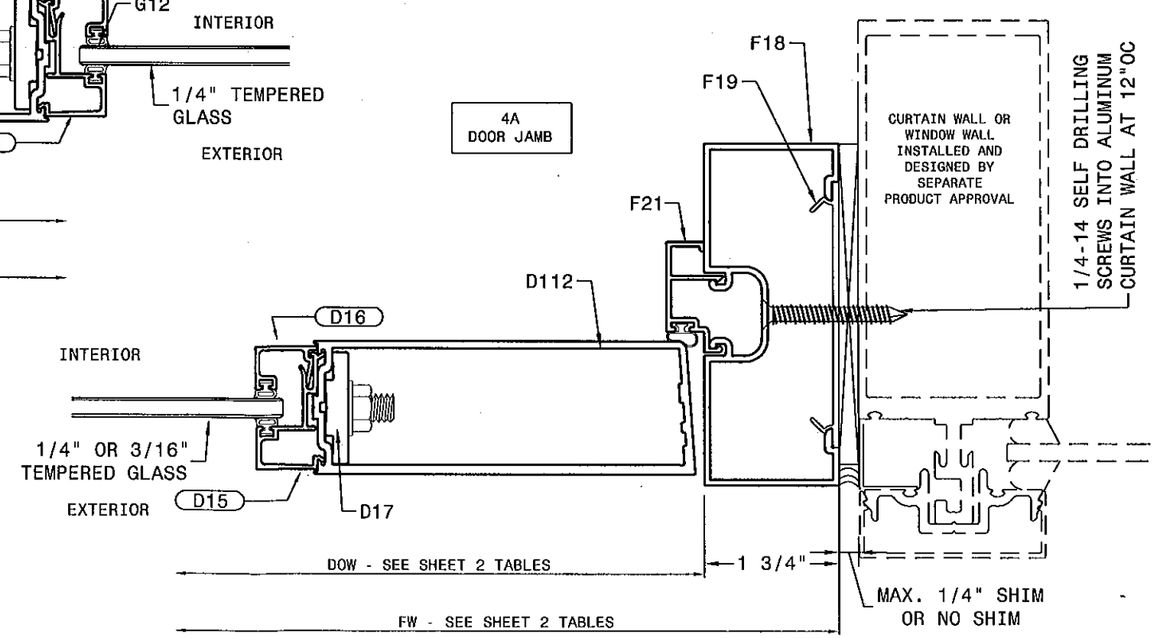

4A
DOOR JAMB

TYPICAL ANCHORS

- A- #14 SS WOOD SCREWS OR 1/4" ULTRACONS W/ 1 1/2" EMBED. INTO WOOD (SG=.55)
- B- 1/4" ULTRACONS BY ELCO OR $\frac{1}{4}$" TAPCONS BY ITW BUILDEX W/ 1 1/4" EMBED. INTO HOLLOW CMU OR 1 3/8" INTO 3000 PSI CONCRETE.
- C- 1/4-14 SELF DRILLING SCREWS INTO METAL STRUCTURES (1/8" MIN. 6063-T5 ALUMINUM OR ASTM A36 STEEL)

EDGE DISTANCES

- E.D.= 1" FOR WOOD
- E.D.= 2 1/2" FOR MASONRY AND CONCRETE
- E.D.= 3/4" FOR METAL

Trulite
GLASS & ALUMINUM SOLUTIONS™
http://www.trulite.com
800 FAIRWAY DRIVE, Suite 200
DEERFIELD BEACH, FL 33441
p. 800-432-8132 | f. 954-724-2083

PRODUCT:

N.I. SERIES WIDE STILE
ALUMINUM OUTSWING DOOR, NON-IMPACT

Resistor
BLAST & STORM PROTECTION™

REVN	DATE/REMARKS

ENGINEER:
EngCo Inc.
CA 8116
5595 ORANGE DRIVE SUITE 201
DAVIE, FL. 33314
ENGCO@AOL.COM

PEDRO M. DE FIGUEIREDO
LICENSE
No. 52609
STATE OF FLORIDA
PROFESSIONAL ENGINEER
MAR 21 2012
ENGINEER SEAL
PEDRO M. DE FIGUEIREDO
PE 52609

PRODUCT CONTROL APPROVAL:

PRODUCT REVISED
as complying with the Florida Building Code
Acceptance No. 11-1101.02
Expiration Date 12/31/16
By Ichas I. Chaux
Miami Dade Product Control

DRAWN: TRULITE	DRAWING No:
DATE: 10.10.11	5 OF 9
DWG: 11-189	

HINGE OPTIONS

ILLUSTRATION SHOWING SINGLE DOOR
DOUBLE DOOR SIMILAR AND OPPOSITE

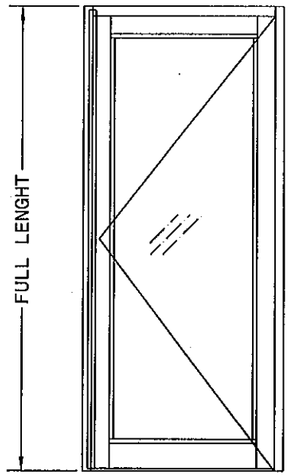

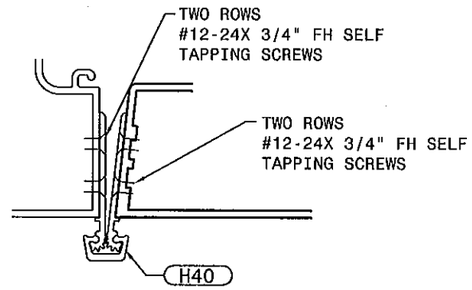

CONTINUOUS ALUMINUM ROTON HINGE
HAGER 780-112
FASTENED TO FRAME AND DOOR STILE WITH:
(25) TOTAL SCREWS ON 80" & 84" DOORS

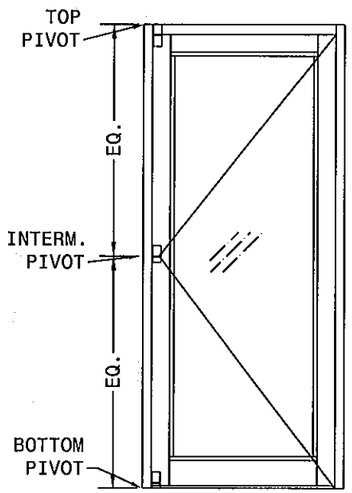

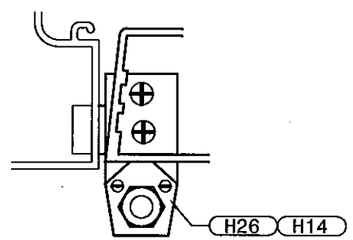

OFFSET PIVOT HINGES
OFFSET CAST ALUMINUM PIVOT HINGES
INTERNATIONAL H26 (TOP & BOTTOM)
INTERNATIONAL H14 (MIDSPAN)

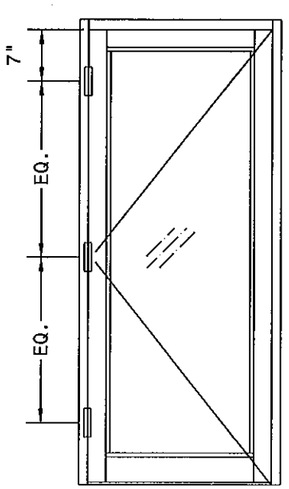

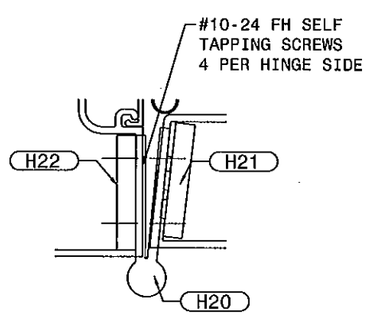

4 1/2" BRASS BUTT HINGES
HAGER BB-1191
12"FROM CL TO BOTTOM OF DOOR
7" FROM CL TO TOP OF DOOR
ONE AT MIDSPAN

BILL OF MATERIALS

ITEM #	PART #	DESCRIPTION - DOOR	MATERIAL/REMARKS
D102	AGA-152	5" TOP RAIL	6063-T5
D103	AGA-69	7 1/2" TOP/BOTTOM RAIL	6063-T5
D104	AGA-1007	10" TOP/BOTTOM RAIL	6063-T5
D112	AGA-108	3 1/2" HINGE STILE	6063-T5
D122	AGA-151	3 1/2" ACTIVE STILE	6063-T5
D132	AGA-110	3 1/2" INACTIVE STILE	6063-T5
D15	AGA-113	SASH	6063-T5
D16	AGA-114	SASH BEAD	6063-T5
D17	TR 36	3/8" TRUSS ROD WITH 3/8" NUTS	STEEL
D18	S-PILE	SCHLEGEL WEATHER STRIP	PILE
		DESCRIPTION - FRAME	
F11	4506	CLOSED BACK ALTERNATE DOOR HEADER	6063-T5
F12	4502	HORIZONTAL	6063-T6
F121	4501	OPEN BACK HEADER	6063-T5
F13	4503	GLASS STOP	6063-T5
F14	4505	MULLION	6063-T6
F15	1012	1 3/4 X 4 1/2" TUBE HEADER (ALT. TRANSOM/MULL)	6063-T6
F16	1055B	APPLIED SASH (TRANSON ONLY)	6063-T5
F17	1055F	SASH GLASS STOP (TRANSOM ONLY)	6063-T5
F18	4500	OPEN BACK JAMB	6063-T5
F19	4008	FLAT FILLER 3 1/2" LONG	6063-T5
F20	1040	4" SADDLE THRESHOLD	6063-T5
F201	1042	4" BUMPER THRESHOLD	6063-T6
F21	4510	DOOR STOP	6063-T5
F22	AGA-95	APPLIED DOOR STOP	6063-T5
F23	H-62A	EPDM SETTING BLOCKS AT 1/4 POINTS (DURO 85 ±5)	CORSON RUBBER/HEXPOL
G11	H-65	EPDM DOOR WEATHER STRIP (DURO 60 ±5)	CORSON RUBBER/HEXPOL
G12	H-64	EPDM GASKET (DURO 70 ±5)	CORSON RUBBER/HEXPOL
G13	H-63	EPDM WEDGE-IN GASKET (DURO 70 ±5)	CORSON RUBBER/HEXPOL
		DESCRIPTION - HARDWARE	
H100	23914	PUSH BAR (OPTIONAL)	6063-T5
H101	23883	HANDLE (OPTIONAL)	6063-T6
H20	BB1191	HINGES HAGER 4 1/2 X 4	BRASS
H21	26139	HINGE BACK-UP PLATE	STEEL
H22	26139	HINGE BACK-UP PLATE	STEEL
H30	H-26	TOP & BOTTOM OFFSET PIVOT	ALUMINUM
H31	H-14	INTERMEDIATE PIVOT	ALUMINUM
H311		1/8"- 1"x 8 3/4" BAR AT INT. PIVOT	STEEL
H40	780-112	HAGER ROTON HINGE	ALUMINUM
L10	H75	2 POINTS LOCK W/PANIC PANIC TOUCH BAR 2086 (ACT /INACTIVE)	JACKSON
L11	MS1850	ONE POINT LOCK KEY/THUMB TURN (ACT)	ADAMS RITE
L12	6300	TOP & BOTTOM FLUSH BOLT & GUIDE (INACT)	REFLECTOLITE
L121	-	FLUSH BOLT GUIDE	
L13	4015-4016	3 POINTS LOCK W/ KEY/THUMB TURN (ACT)	ADAMS RITE
L14	1880	2 POINTS LOCK OPERATED ON (INACT) INTERIOR W/ THUMB TURN	ADAMS RITE

Trulite
GLASS & ALUMINUM SOLUTIONS™
http://www.trulite.com
800 FAIRWAY DRIVE, Suite 200
DEERFIELD BEACH, FL 33441
p. 800-432-8132 | f. 954-724-2083

PRODUCT:

N.I. SERIES
WIDE STILE
ALUMINUM OUTSWING
DOOR, NON-IMPACT

Resistor
BLAST & STORM PROTECTION™

REVN	DATE/REMARKS

ENGINEER:
EngCo Inc.
CA 8116
5595 ORANGE DRIVE SUITE 201
DAVIE, FL. 33314
ENGCO@AOL.COM

PEDRO M. DEFIGUEIREDO
LICENSE
No. 52609
STATE OF
MARCH 20, 2012
PROFESSIONAL ENGINEER
ENGINEER SEAL
PEDRO DEFIGUEIREDO
PE 52609

PRODUCT CONTROL APPROVAL:

PRODUCT REVISED
as complying with the Florida
Building Code
Acceptance No. 11-1101.02
Expiration Date 12/31/16
By Ishag I. Lund
Miami Dade Product Control

DRAWN: TRULITE	DRAWING No:
DATE: 10.10.11	6 OF 9
DWG: 11-189	

FRAMING COMPONENTS

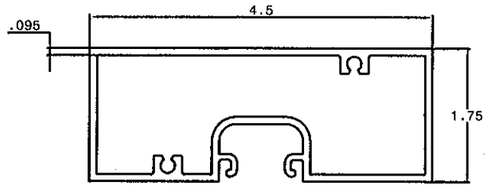

F11: 4506 (AGA-67) CLOSE BACK HEADER

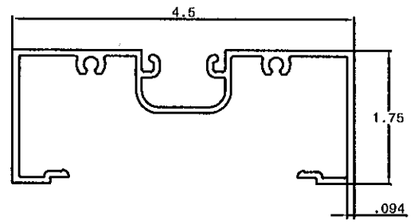

F121: 4501 (AGA-49/1060) OPEN BACK HEADER

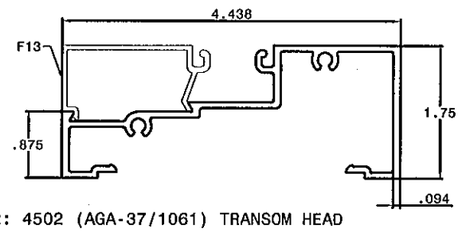

F12: 4502 (AGA-37/1061) TRANSOM HEAD

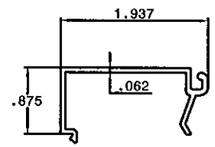

F13: 4503 (AGA-38) GLASS STOP

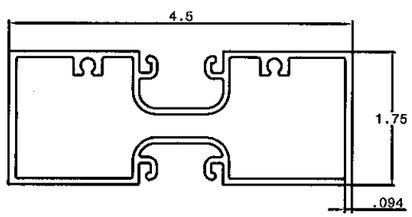

F14: 4505 (AGA-68)INTERMMEDIATE HORIZONTAL

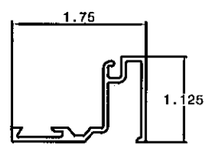

F16: 1055B APPLIED SASH USE WITH F15/17

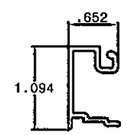

F17: 1055F APPLIED SASH USE WITH F15/F16

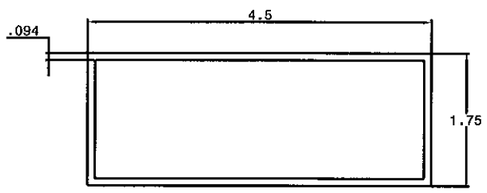

F15: 1012 (A9342) ALTERNATE TRANSOM

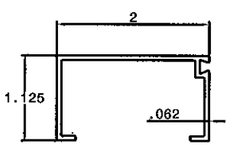

F22: (AGA-95) DOOR STOP USE WITH F15

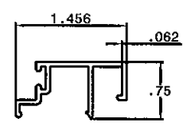

F21: 4510 (AGA-55) DOOR STOP USE WITH F14/F18

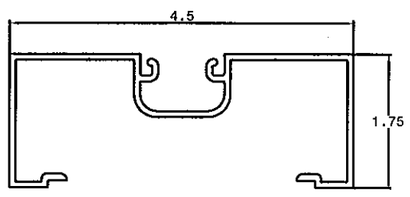

F18: 4500 (AGA-49) OPEN BACK JAMB

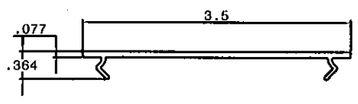

F19: 4008 (AGA-46) INSERT SHEAR FILLER 3.5" MIN LONG AT EACH ANCHOR. USE WITH F18, F12 & F121.

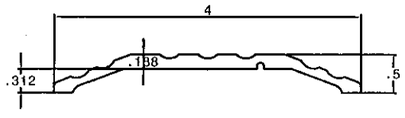

F20: 1040 (AGA-427) SADDLE THRESHOLD

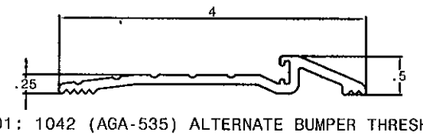

F201: 1042 (AGA-535) ALTERNATE BUMPER THRESHOLD

DOOR COMPONENTS

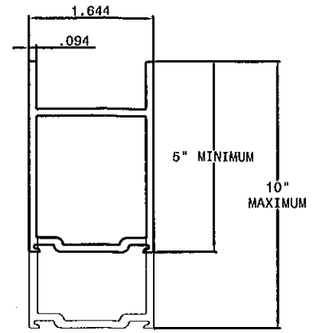

D102, D103, D104 -TOP RAIL DIMENSION VARIES FROM 5", 7.5" & 10"

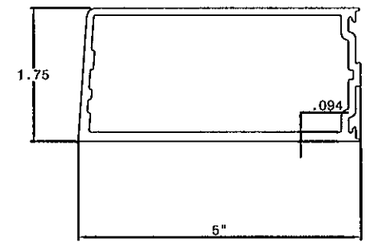

D112 HINGE STYLE

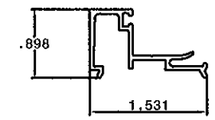

D15 EXTERIOR GLASS STOP (AGA-113)

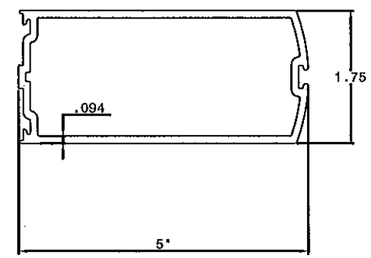

D122 ACTIVE STYLE

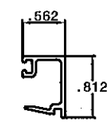

D16 INTERIOR GLASS STOP (AGA-114)

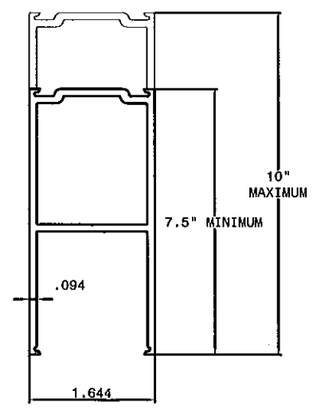

D103, D104-BOTTOM RAIL DIMENSION VARIES FROM 7.5" & 10"

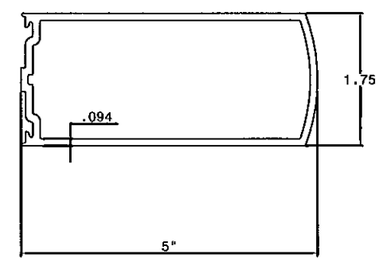

D132 INACTIVE STYLE

WEATHERSTRIP COMPONENTS

NOTE: ENLARGE TO SHOW CLARITY. NOT TO SCALE BIGGER TOLERANCE IS EXPECTED

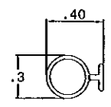

G11: H65-DOOR STOP. BULB GASKET. EPDM

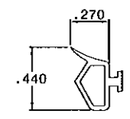

G12: H-64-DOOR. GLAZING GASKET. EPDM

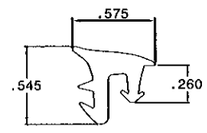

G13: H-63-FRAMING. WEDGE GASKET. EPDM

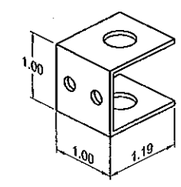

L121 FLUSH BOLT GUIDE (STAINLESS STEEL)

Trulite
GLASS & ALUMINUM SOLUTIONS™
http://www.trulite.com
800 FAIRWAY DRIVE, Suite 200
DEERFIELD BEACH, FL 33441
p. 800-432-8132 | f. 954-724-2083

PRODUCT:

N.I. SERIES WIDE STILE
ALUMINUM OUTSWING DOOR, NON-IMPACT

Resistor
BLAST & STORM PROTECTION™

REVN	DATE/REMARKS

ENGINEER:
EngCo Inc.
CA 8116
5595 ORANGE DRIVE SUITE 201
DAVIE, FL. 33314
ENGCO@AOL.COM

PEDRO M. DE FIGUEIREDO
LICENSE
No. 52609
STATE OF FLORIDA
PROFESSIONAL ENGINEER
MAR 2 1 2012

ENGINEER SEAL
PEDRO DE FIGUEIREDO
PE 52609

PRODUCT CONTROL APPROVAL:

PRODUCT REVISED
as complying with the Florida Building Code
Acceptance No. 11-1101.02
Expiration Date 12/31/16
By Greg L. Laurent
Miami Dade Product Control

DRAWN: TRULITE	DRAWING No:
DATE: 10.10.11	7 OF 9
DWG: 11-189	

TYPICAL ANCHORS

- A- #14 SS WOOD SCREWS OR 1/4" ULTRACONS W/ 1 1/2" EMBED. INTO WOOD (SG=.55)
- B- 1/4" ULTRACONS BY ELCO OR $\frac{1}{4}$" TAPCONS BY ITW BUILDEX W/ 1 1/4" EMBED. INTO HOLLOW CMU OR 1 3/8" INTO 3000 PSI CONCRETE.
- C- 1/4-14 SELF DRILLING SCREWS INTO METAL STRUCTURES (1/8" MIN. 6063-T5 ALUMINUM OR ASTM A36 STEEL)

ANCHOR NOTES:

1. EDGE DISTANCE (ED.): 1" FOR WOOD, 2-1/2" FOR MASONRY & 3/4" FOR METAL
2. QUANTITY AND SPACING OF ANCHORS TYPE A WILL APPLY FOR INSTALLATION WITH BUCK.
3. WOOD BUCKS ARE NOT BY TRULITE, THEY ARE TO BE PROVIDED AND DESIGNED BY OTHERS
4. STRUCTURAL BUCKS ARE TO BE MADE OF MINIMUM 2X5 PT. WOOD.
5. NON STRUCTURAL BUCKS MADE OF LESS THAN 2X MUST BE CONTINUOUS AND PROPERLY SECURED AND FRAMING MUST BE ATTACHED TO THE MAIN STRUCTURE.

ANCHOR SPACING LAYOUT

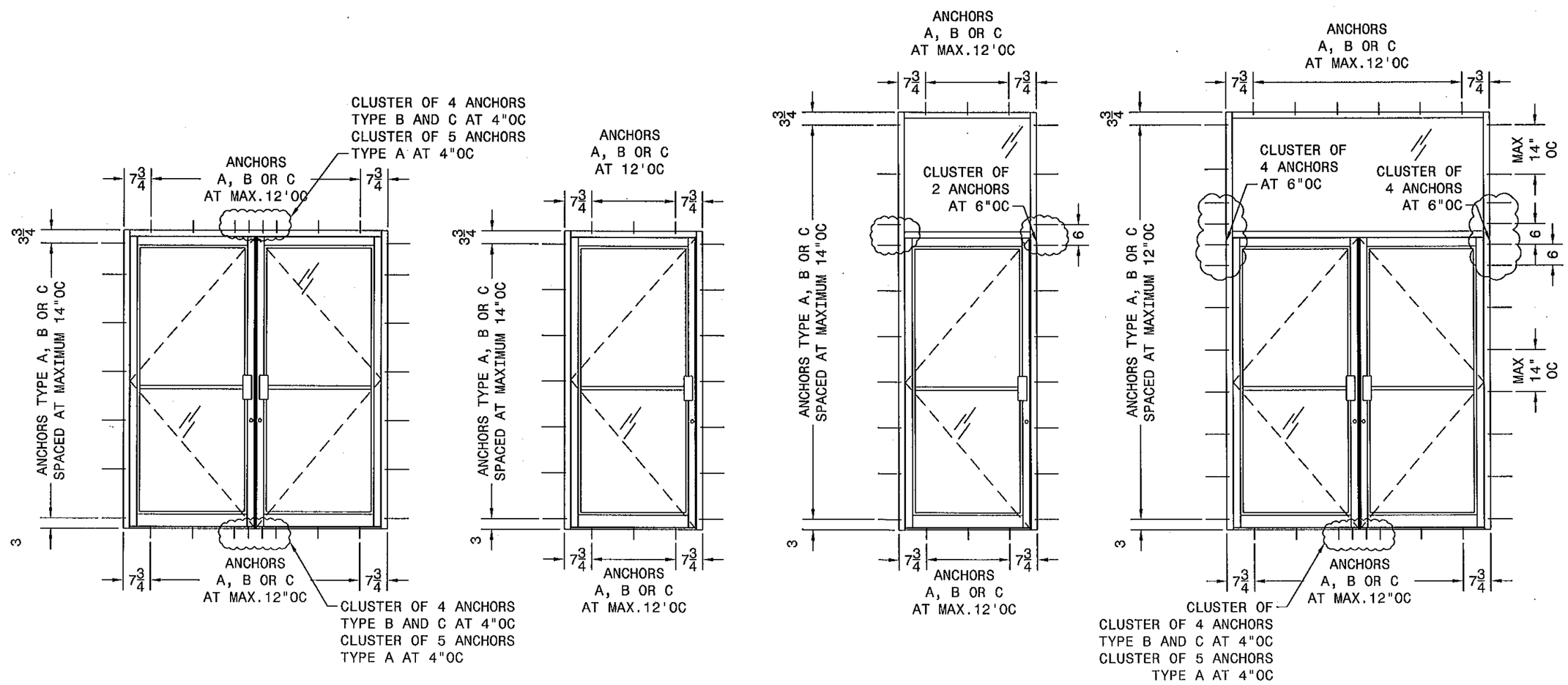

Trulite
GLASS & ALUMINUM SOLUTIONS™
http://www.trulite.com
800 FAIRWAY DRIVE, Suite 200
DEERFIELD BEACH, FL 33441
p. 800-432-8132 | f. 954-724-2083

PRODUCT:

N.I. SERIES WIDE STILE
ALUMINUM OUTSWING DOOR, NON-IMPACT

Resistor
BLAST & STORM PROTECTION™

REVN	DATE/REMARKS

ENGINEER:
EngCo Inc.
CA 8116
5595 ORANGE DRIVE SUITE 201
DAVIE, FL. 33314
ENGCO@AOL.COM

PEDRO M. DE FIGUEIREDO
LICENSE No. 52609
STATE OF FLORIDA
PROFESSIONAL ENGINEER
MAR 21 2012
ENGINEER SEAL
PEDRO DE FIGUEIREDO
PE 52609

PRODUCT CONTROL APPROVAL:

PRODUCT REVISED
as complying with the Florida Building Code
Acceptance No. 11-1101.02
Expiration Date 12/31/16
By Khag L. Chauhan
Miami Dade Product Control

DRAWN: TRULITE	DRAWING No:
DATE: 10.10.11	8 OF 9
DWG: 11-189	

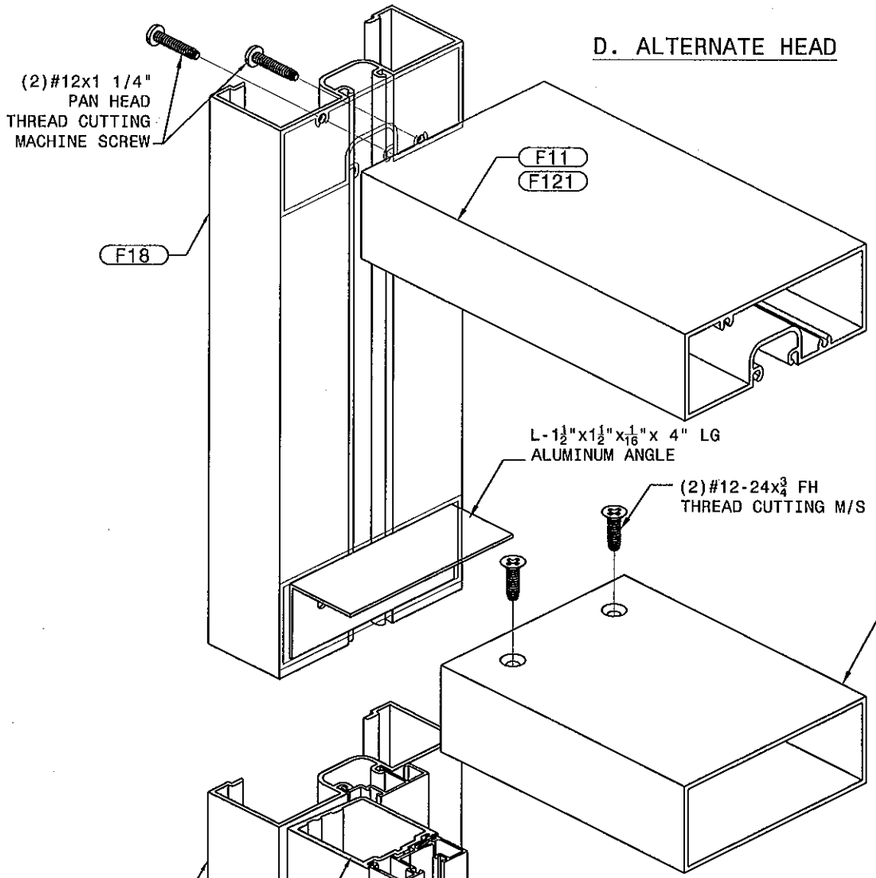

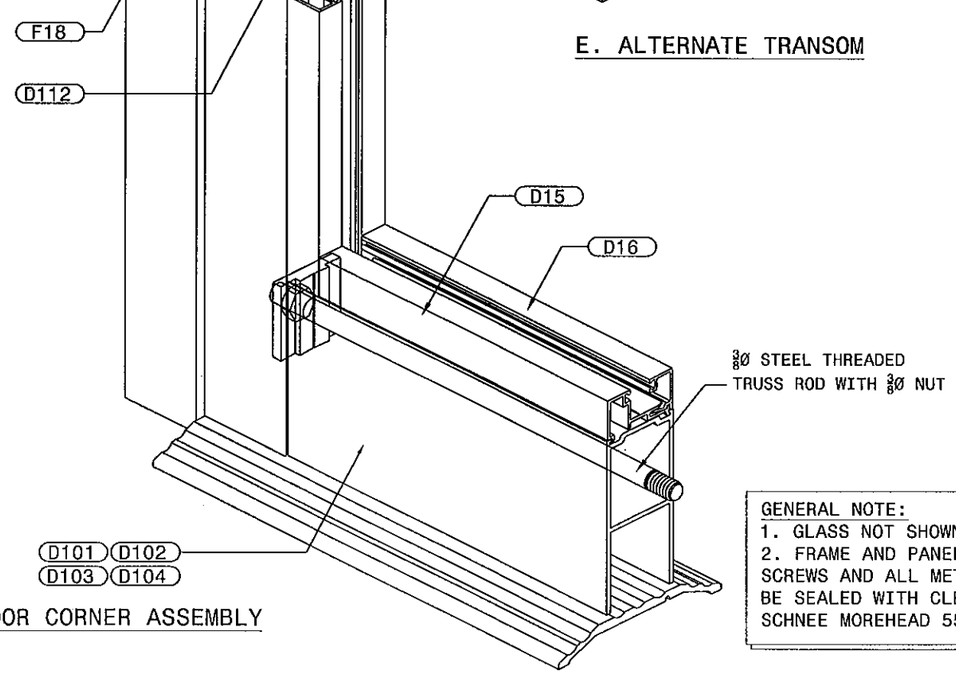

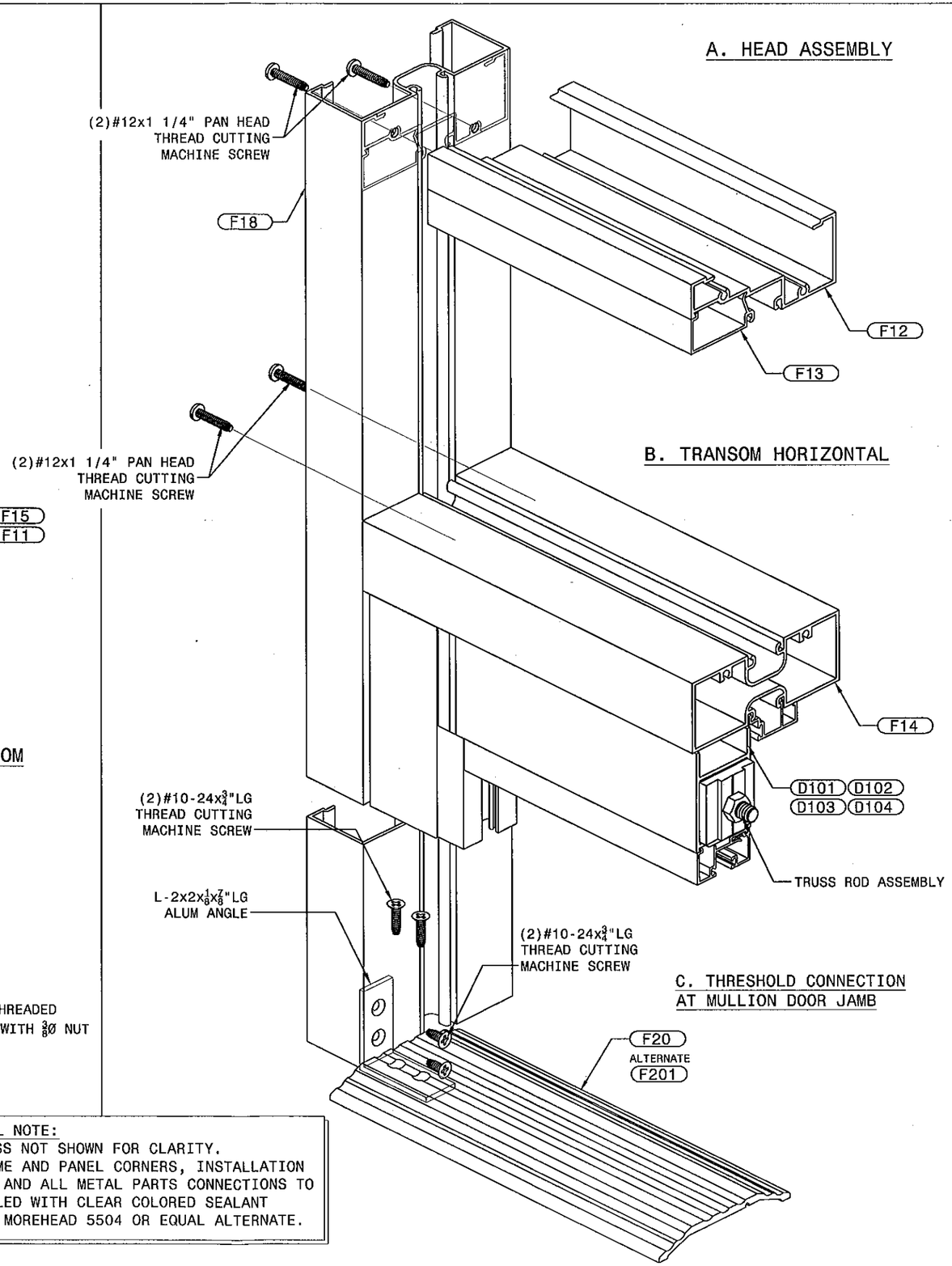

GENERAL NOTE:
1. GLASS NOT SHOWN FOR CLARITY.
2. FRAME AND PANEL CORNERS, INSTALLATION SCREWS AND ALL METAL PARTS CONNECTIONS TO BE SEALED WITH CLEAR COLORED SEALANT SCHNEE MOREHEAD 5504 OR EQUAL ALTERNATE.

Trulite
GLASS & ALUMINUM SOLUTIONS™
http://www.trulite.com
800 FAIRWAY DRIVE, Suite 200
DEERFIELD BEACH, FL 33441
p. 800-432-8132 | f. 954-724-2083

PRODUCT:

N.I. SERIES WIDE STILE
ALUMINUM OUTSWING DOOR, NON-IMPACT

Resistor
BLAST & STORM PROTECTION™

REVN	DATE/REMARKS

ENGINEER:
EngCo Inc.
CA 8116
5595 ORANGE DRIVE SUITE 201
DAVIE, FL. 33314
ENGCO@AOL.COM

PEDRO M. DE FIGUEIREDO LICENSE No. 52609 STATE OF FLORIDA PROFESSIONAL ENGINEER
MAR 21 2012
ENGINEER SEAL
PEDRO DE FIGUEIREDO
PE 52609

PRODUCT CONTROL APPROVAL:

PRODUCT REVISED
as complying with the Florida Building Code
Acceptance No. 11-1101.02
Expiration Date 12/31/16
By Ishaq I. Chanda
Miami Dade Product Control

DRAWN: TRULITE	DRAWING No:
DATE: 10.10.11	9 OF 9
DWG: 11-189	