MIAMI-DADE COUNTY
DEPARTMENT OF PERMITTING, ENVIRONMENT, AND REGULATORY AFFAIRS (PERA)
BOARD AND CODE ADMINISTRATION DIVISION

MIAMI-DADE COUNTY
PRODUCT CONTROL SECTION
11805 SW 26 Street, Room 208
Miami, Florida 33175-2474
T (786) 315-2590 F (786) 315-2599
www.miamidade.gov/pera/

NOTICE OF ACCEPTANCE (NOA)

Custom Glass Company
750 Southwest 14th Avenue
Pompano Beach, FL 33069

SCOPE:

This NOA is being issued under the applicable rules and regulations governing the use of construction materials. The documentation submitted has been reviewed and accepted by Miami-Dade County PERA - Product Control Section to be used in Miami Dade County and other areas where allowed by the Authority Having Jurisdiction (AHJ).

This NOA shall not be valid after the expiration date stated below. The Miami-Dade County Product Control Section (In Miami Dade County) and/or the AHJ (in areas other than Miami Dade County) reserve the right to have this product or material tested for quality assurance purposes. If this product or material fails to perform in the accepted manner, the manufacturer will incur the expense of such testing and the AHJ may immediately revoke, modify, or suspend the use of such product or material within their jurisdiction. PERA reserves the right to revoke this acceptance, if it is determined by Miami-Dade County Product Control Section that this product or material fails to meet the requirements of the applicable building code.

This product is approved as described herein, and has been designed to comply with the Florida Building Code, including the High Velocity Hurricane Zone.

DESCRIPTION: Series "CGC-6000" Aluminum Storefront System – S.M.I.

APPROVAL DOCUMENT: Drawing No. **6000-SMI**, titled "CGC-6000 Small Missile Impact Resistant System", sheets 1 through 11 of 11, dated 10/5/05, with revision #4 dated 11/18/10, prepared by manufacturer, signed and sealed by Scott Wolters, P.E. on 11/1/11, bearing the Miami-Dade County Product Control Revision stamp with the Notice of Acceptance number and expiration date by the Miami-Dade County Product Control Section.

MISSILE IMPACT RATING: Small Missile Impact Resistant

LABELING: Each unit shall bear a permanent label with the manufacturer's name or logo, city, state, model/series, and following statement: "Miami-Dade County Product Control Approved", unless otherwise noted herein.

RENEWAL of this NOA shall be considered after a renewal application has been filed and there has been no change in the applicable building code negatively affecting the performance of this product.

TERMINATION of this NOA will occur after the expiration date or if there has been a revision or change in the materials, use, and/or manufacture of the product or process. Misuse of this NOA as an endorsement of any product, for sales, advertising or any other purposes shall automatically terminate this NOA. Failure to comply with any section of this NOA shall be cause for termination and removal of NOA.

ADVERTISEMENT: The NOA number preceded by the words Miami-Dade County, Florida, and followed by the expiration date may be displayed in advertising literature. If any portion of the NOA is displayed, then it shall be done in its entirety.

INSPECTION: A copy of this entire NOA shall be provided to the user by the manufacturer or its distributors and shall be available for inspection at the job site at the request of the Building Official.

This NOA **revises NOA # 10-0804.13** and consists of this page 1 and evidence pages E-1, E-2, E-3 and E-4, as well as approval document mentioned above.

The submitted documentation was reviewed by **Jaime Gascon, P.E.**

MIAMI-DADE COUNTY APPROVED

J Gascon 1/12/12

NOTICE OF ACCEPTANCE: EVIDENCE SUBMITTED

A. DRAWINGS

1. Manufacturer's die drawings and sections.
2. Drawing No. **6000-SMI**, Sheets 1 through 11 of 11, titled "CGC-6000 Small Missile Impact Resistant System", dated 10/5/05, with revision #4 dated 11/18/10, prepared by manufacturer, signed and sealed by Scott Wolters, P.E. on 11/1/11.

B. TESTS

1. Test reports on: 1) Uniform Static Air Pressure Test, Loading per FBC TAS 202-94 along with marked-up drawings and installation diagram of aluminum unitized ribbon window system, prepared by Hurricane Test Laboratory, LLC, Test Report No. **HTL-0127-0125-04** *#1 (ELEVATION A/2)*, dated 1/22-2/05, signed and sealed by Vinu J. Abraham, P.E.
   (Submitted under previous NOA #05-1013.07)
2. Test reports on: 1) Uniform Static Air Pressure Test, Loading per FBC TAS 202-94
   2) Large Missile Impact Test per FBC, TAS 201-94
   3) Cyclic Wind Pressure Loading per FBC, TAS 203-94
   along with marked-up drawings and installation diagram of aluminum unitized ribbon window system, prepared by Hurricane Test Laboratory, LLC, Test Reports No. **HTL-0127-1114-02** #1 and **HTL-0127-0602-03** #5 (ELEVATION B/3), dated 11/15-18/02 – 1/7/04, signed and sealed by Vinu J. Abraham, P.E.
   (Submitted under previous NOA #05-1013.07)
3. Test reports on: 1) Air Infiltration Test, per FBC, TAS 202-94
   2) Uniform Static Air Pressure Test, Loading per FBC TAS 202-94
   3) Water Resistance Test, per FBC, TAS 202-94
   4) Large Missile Impact Test per FBC, TAS 201-94
   5) Small Missile Impact Test per FBC, TAS 201-94
   6) Cyclic Wind Pressure Loading per FBC, TAS 203-94
   along with marked-up drawings and installation diagram of aluminum unitized window system, prepared by Hurricane Test Laboratory, LLC, Test Reports No. **HTL-0127-0410-03** #1; **HTL-0127-0816-03** #1 and **HTL-0127-1005-04** #2 (ELEVATION C1/4), dated 4/10/03-08/19/03-10/4/04, signed and sealed by Vinu J. Abraham, P.E.
   (Submitted under previous NOA #05-1013.07)

Jaime D. Gascon, P.E.
Product Control Section Supervisor
NOA No. 11-1103.06
Expiration Date: March 30, 2016
Approval Date: January 19, 2012

NOTICE OF ACCEPTANCE: EVIDENCE SUBMITTED

B. TESTS (CONTINUED)

4. Test reports on: 1) Large Missile Impact Test per FBC, TAS 201-94
2) Small Missile Impact Test per FBC, TAS 201-94
3) Cyclic Wind Pressure Loading per FBC, TAS 203-94
along with marked-up drawings and installation diagram of aluminum unitized window system, prepared by Hurricane Test Laboratory, LLC, Test Report No. **HTL-0127-0410-03** #3 (ELEVATION C2/5), dated 4/28/03, signed and sealed by Vinu J. Abraham, P.E.
(Submitted under previous NOA #05-1013.07)

5. Test reports on: 1) Large Missile Impact Test per FBC, TAS 201-94
2) Small Missile Impact Test per FBC, TAS 201-94
3) Cyclic Wind Pressure Loading per FBC, TAS 203-94
along with marked-up drawings and installation diagram of aluminum unitized window system, prepared by Hurricane Test Laboratory, LLC, Test Report No. **HTL-0127-0317-03** #1 (ELEVATION C3/6), dated 3/10-11/03, signed and sealed by Vinu J. Abraham, P.E.
(Submitted under previous NOA #05-1013.07)

6. Test reports on: 1) Uniform Static Air Pressure Test, Loading per FBC TAS 202-94
2) Large Missile Impact Test per FBC, TAS 201-94
3) Small Missile Impact Test per FBC, TAS 201-94
4) Cyclic Wind Pressure Loading per FBC, TAS 203-94
along with marked-up drawings and installation diagram of aluminum unitized window system, prepared by Hurricane Test Laboratory, LLC, Test Reports No. **HTL-0127-0602-03** #2 and **HTL-0127-1016-03** #2 (ELEVATION D/7), dated 4/10/03, signed and sealed by Vinu J. Abraham, P.E.
(Submitted under previous NOA #05-1013.07)

7. Test reports on: 1) Uniform Static Air Pressure Test, Loading per FBC TAS 202-94
2) Large Missile Impact Test per FBC, TAS 201-94
3) Cyclic Wind Pressure Loading per FBC, TAS 203-94
along with marked-up drawings and installation diagram of aluminum unitized window system, prepared by Hurricane Test Laboratory, LLC, Test Reports No. **HTL-0127-0602-03** #1 and **HTL-0127-1016-03** #2 (ELEVATION E/8), dated 6/11/03, signed and sealed by Vinu J. Abraham, P.E.
(Submitted under previous NOA #05-1013.07)

Jaime D. Gascon, P.E.
Product Control Section Supervisor
NOA No. 11-1103.06
Expiration Date: March 30, 2016
Approval Date: January 19, 2012

NOTICE OF ACCEPTANCE: EVIDENCE SUBMITTED

B. TESTS (CONTINUED)

8. Test reports on: 1) Uniform Static Air Pressure Test, Loading per FBC TAS 202-94
2) Large Missile Impact Test per FBC, TAS 201-94
3) Cyclic Wind Pressure Loading per FBC, TAS 203-94
along with marked-up drawings and installation diagram of aluminum unitized window system, prepared by Hurricane Test Laboratory, LLC, Test Reports No. **HTL-0127-0127-03** #1; **HTL-0127-0602-03** #1 and **HTL-0127-1009-03** #1 (ELEVATION F/9), dated 1/20-5/22/03 & 1/7/04, signed and sealed by Vinu J. Abraham, P.E.
(Submitted under previous NOA #05-1013.07)

9. Test reports on: 1) Air Infiltration Test, per FBC, TAS 202-94
2) Uniform Static Air Pressure Test, Loading per FBC TAS 202-94
3) Water Resistance Test, per FBC, TAS 202-94
4) Large Missile Impact Test per FBC, TAS 201-94
5) Cyclic Wind Pressure Loading per FBC, TAS 203-94
along with marked-up drawings and installation diagram of aluminum unitized window system, prepared by Hurricane Test Laboratory, LLC, Test Reports No. **HTL-0127-0410-03** #2 and **HTL-0127-0219-04** #1 (ELEVATION H/10), dated 4/24/03-5/6/04, signed and sealed by Vinu J. Abraham, P.E.
(Submitted under previous NOA #05-1013.07)

10. Test reports on: 1) Air Infiltration Test, per FBC, TAS 202-94
2) Uniform Static Air Pressure Test, Loading per FBC TAS 202-94
3) Water Resistance Test, per FBC, TAS 202-94
4) Large Missile Impact Test per FBC, TAS 201-94
5) Cyclic Wind Pressure Loading per FBC, TAS 203-94
along with marked-up drawings and installation diagram of aluminum unitized window system, prepared by Hurricane Test Laboratory, LLC, Test Report No. **HTL-0127-0108-03** #1 (ELEV. H1/11), dated 1/6-13/03, signed and sealed by Vinu J. Abraham, P.E.
(Submitted under previous NOA #05-1013.07)

C. CALCULATIONS:

1. Anchor verification calculations and structural analysis, complying with FBC-2007, dated 1/19/06, revised on 3/9/06, 7/16/10 and 11/18/10, signed and sealed by Scott Wolters, P.E.
(Submitted under previous NOA #10-0804.13)

2. Glazing complies with ASTM E1300-04

Jaime D. Gascon, P.E.
Product Control Section Supervisor
NOA No. 11-1103.06
Expiration Date: March 30, 2016
Approval Date: January 19, 2012

NOTICE OF ACCEPTANCE: EVIDENCE SUBMITTED

D. QUALITY ASSURANCE

1. Miami-Dade Department of Permitting, Environment, and Regulatory Affairs (PERA).

E. MATERIAL CERTIFICATIONS

1. Notice of Acceptance No. **11–0325.05** issued to Solutia, Inc. for their "Saflex and Vanceva clear and color interlayers" dated 05/05/11, expiring on 05/21/16 .

F. STATEMENTS

1. Statement letter of conformance and compliance with the FBC-2010, dated November 1, 2011, signed and sealed by Scott Wolters, P.E.
2. Statement letter of conformance to the FBC-2007, dated July 20, 2010, signed and sealed by Scott Wolters, P.E.
   (Submitted under previous NOA #10-0804.13)
3. Statement letter of no financial interest, dated October 5, 2005, signed and sealed by Scott Wolters, P.E.
   (Submitted under previous NOA #10-0804.13)
4. Laboratory compliance letters for Test Reports No.'s **HTL-0127-0125-04, HTL-0127-1114-02, HTL-0127-0602-03, HTL-0127-0410-03, HTL-0127-0816-03, HTL-0127-1005-04, HTL-0127-0410-03, HTL-0127-0317-03, HTL-0127-0602-03, HTL-0127-1016-03, HTL-0127-0602-03, HTL-0127-1016-03, HTL-0127-0602-03, HTL-0127-1016-03, HTL-0127-0127-03, HTL-0127-0602-03, HTL-0127-1009-03, HTL-0127-0410-03, HTL-0127-0219-04** and **HTL-0127-0108-03**, issued by Hurricane Test Laboratory, LLC, dated March 14, 2005, all signed and sealed by Vinu J. Abraham, P. E.
   (Submitted under previous NOA #10-0804.13)

G. OTHERS

1. Notice of Acceptance No. **10-0804.13**, issued to Custom Glass Company for their "Series 'CGC-6000' Aluminum Storefront System - S.M.I.", approved on 12/23/10 and expiring on 03/30/16.

Jaime D. Gascon, P.E.
Product Control Section Supervisor
NOA No. 11-1103.06
Expiration Date: March 30, 2016
Approval Date: January 19, 2012

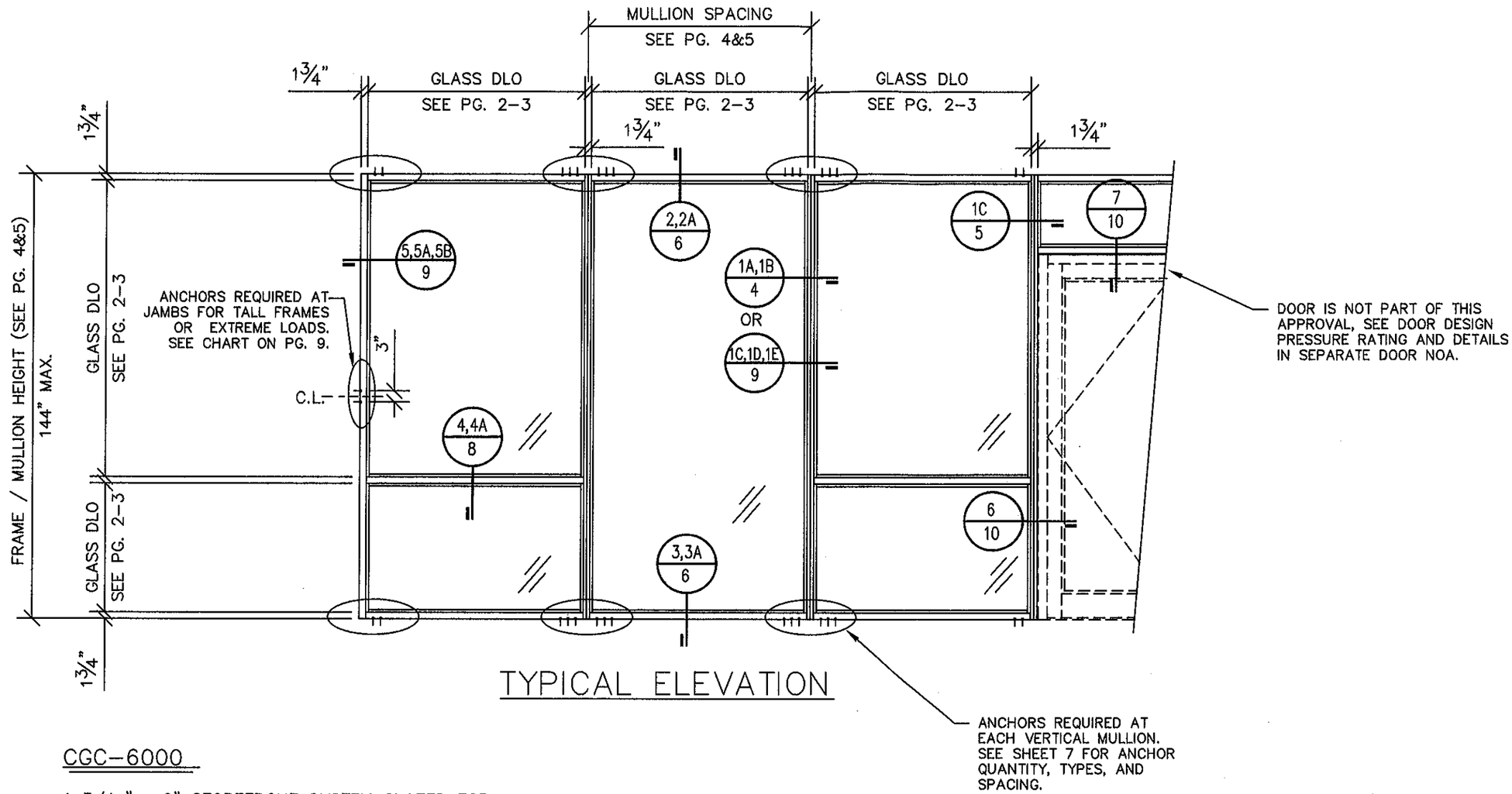

TYPICAL ELEVATION

CGC–6000

1 3/4 " x 6" STOREFRONT SYSTEM GLAZED FOR SMALL MISSILE IMPACT. SHUTTERS NOT REQUIRED FOR INSTALLATIONS ABOVE 30 FT.

GLASS – SEE CHARTS ON PAGES 2 THRU 3 FOR ALLOWABLE GLASS TYPES, SIZES, AND DESIGN PRESSURES.

MULLIONS – SEE CHARTS ON PAGES 4 AND 5 FOR ALLOWABLE DESIGN PRESSURES FOR VARIOUS MULLION AND REINFORCEMENT CONFIGURATIONS.

ANCHORS – SEE CHARTS ON PAGES 7 AND 9 FOR ALLOWABLE ANCHORS.

SYSTEM – THE DESIGN PRESSURE OF THE ENTIRE SYSTEM IS THE LOOWEST ALLOWABLE DESIGN PRESSURE OF THE THREE COMPONENTS ABOVE THAT MAKE UP THE SYSTEM.

DOORS – CGC 6000 IS DESIGNED TO ACCEPT MIAMI–DADE COUNTY APPROVED DOORS FROM OTHER MANUFACTURERS. PLEASE SEE DOOR APPROVAL FOR FASTENER REQUIREMENTS.

MATERIAL LEGEND – SEE PAGE 10.

NOTES:

1. THIS PRODUCT IS DESIGNED TO COMPLY WITH THE 2010 FLORIDA BUILDING CODE, HVHZ, & ASTM 1300–04. △
2. DESIGN LOADS MUST BE CALCULATED BY A PROFESSIONAL ENGINEER OR ARCHITECT FOR EACH PROJECT. THE DESIGN PRESSURE CANNOT EXCEED THE TESTED PRESSURE, LISTED ON SHEETS 2–10, FOR EACH COMPONENT OF THIS SYSTEM.
3. WOOD BUCKS BY OTHERS MUST BE ANCORED PROPERLY TO TRANSFER IMPOSED LOADS TO THE STRUCTURE.
4. ANCHORS SHALL BE AS LISTED AND SPACED AS SHOWN ON DETAILS. ANCHOR EMBEDMENT IN BASE MATERIAL SHALL BE BEYOND WALL DRESSING OR STUCCO.
5. CODE REQUIREMENTS FOR SAFE GAURDS MUST BE OBSERVED.
6. GLASS CHARTS ON PAGES 2–4 ARE BASED ON TEST PRESSURES AND ASTM E 1300–04.
7. MATERIALS INCLUDING BUT NOT LIMITED TO STEEL/METAL SCREWS, THAT COME INTO CONTACT WITH OTHER DISSIMILAR MATERIALS SHALL MEET THE REQUIREMENTS OF 2004 FLORIDA BUILDING CODE, SECTION 2003.8.4

FOR METRO–DADE OFFICE USE ONLY.

PRODUCT REVISED
as complying with the Florida Building Code
Acceptance No. 11-1103.06
Expiration Date 3/30/2016
By
Miami Dade Product Control

ENGINEER:
SCOTT WOLTERS
FL PE# 62354
WOLTERS ENGINEERING
(COA# 27194)
1271 GRANT STREET
HOLLYWOOD, FL 33019

SEAL:
NOV 01 2011

REVISIONS:
4 11/18/10
3 7/16/10
2 3/9/06

SCALE: N.T.S.
DRAWN BY: SW
DATE: 10/5/05

CGC
Custom Glass Company
Commercial Contractors
est. 1974

DRAWING TITLE: CGC–6000 SMALL MISSILE IMPACT RESISTANT SYSTEM
DWG. # 6000–SMI
PAGE TITLE:
PAGE NO. 1/11

750 Southwest 14th Avenue Pompano Beach, Florida 33069 ph.(954) 781–6565 fax (954) 781–6523

SMALL MISSILE GLASS TYPES

POSITIVE AND NEGATIVE PRESSURES ON GLASS CHARTS ARE BASED ON TESTED PRESSURE AND ASTM E 1300-04.4

Glass Type J (1/4" Heat Strengthened - .060" Saflex PVB - 1/4" Heat Strengthened) Small Missile Only

D.L. OPNG (HEIGHT)	D.L. OPENING (WIDTH)														
	36"	42"	48"	54"	60"	66"	72"	78"	84"	90"	96"	102"	108"	114"	120"
30"	+90,-130	+90,-130	+90,-130	+90,-130	+90,-130	+90,-130	+90,-130	+90,-130	+90,-130	+90,-130	+90,-130	+90,-130	+90,-130	+90,-130	+90,-130
36"	+90,-130	+90,-130	+90,-130	+90,-130	+90,-130	+90,-130	+90,-130	+90,-130	+90,-130	+90,-130	+90,-130	+90,-130	+90,-130	+90,-130	+90,-130
42"	+90,-130	+90,-130	+90,-130	+90,-130	+90,-130	+90,-130	+90,-130	+90,-130	+90,-130	+90,-130	+90,-130	+90,-130	+90,-130	+90,-130	+90,-130
48"	+90,-130	+90,-130	+90,-130	+90,-130	+90,-130	+90,-130	+90,-130	+90,-130	+90,-130	+90,-130	+90,-130	+90,-130	+90,-126	---	---
54"	+90,-130	+90,-130	+90,-130	+90,-130	+90,-130	+90,-130	+90,-130	+90,-130	+90,-130	+90,-130	+90,-128	---	---	---	---
60"	+90,-130	+90,-130	+90,-130	+90,-130	+90,-130	+90,-130	+90,-130	+90,-130	+90,-130	---	---	---	---	---	---
63"	+90,-130	+90,-130	+90,-130	+90,-130	+90,-130	+90,-130	+90,-130	+90,-130	+90,-130	---	---	---	---	---	---
66"	+90,-130	+90,-130	+90,-130	+90,-130	+90,-130	+90,-130	+90,-130	+90,-130	---	---	---	---	---	---	---
69"	+90,-130	+90,-130	+90,-130	+90,-130	+90,-130	+90,-130	+90,-130	---	---	---	---	---	---	---	---
72"	+90,-130	+90,-130	+90,-130	+90,-130	+90,-130	+90,-130	+90,-130	---	---	---	---	---	---	---	---
75"	+90,-130	+90,-130	+90,-130	+90,-130	+90,-130	+90,-130	---	---	---	---	---	---	---	---	---
78"	+90,-130	+90,-130	+90,-130	+90,-130	+90,-130	+90,-130	---	---	---	---	---	---	---	---	---
81"	+90,-130	+90,-130	+90,-130	+90,-130	+90,-130	+90,-130	---	---	---	---	---	---	---	---	---
84"	+90,-130	+90,-130	+90,-130	+90,-130	+90,-130	---	---	---	---	---	---	---	---	---	---
90"	+90,-130	+90,-130	+90,-130	+90,-130	---	---	---	---	---	---	---	---	---	---	---
96"	+90,-130	+90,-130	+90,-130	+90,-128	---	---	---	---	---	---	---	---	---	---	---
102"	+90,-130	+90,-130	+90,-130	---	---	---	---	---	---	---	---	---	---	---	---
108"	+90,-130	+90,-130	+90,-126	---	---	---	---	---	---	---	---	---	---	---	---
114"	+90,-130	+90,-130	---	---	---	---	---	---	---	---	---	---	---	---	---
120"	+90,-130	+90,-130	---	---	---	---	---	---	---	---	---	---	---	---	---
126"	+90,-130	+90,-130	---	---	---	---	---	---	---	---	---	---	---	---	---

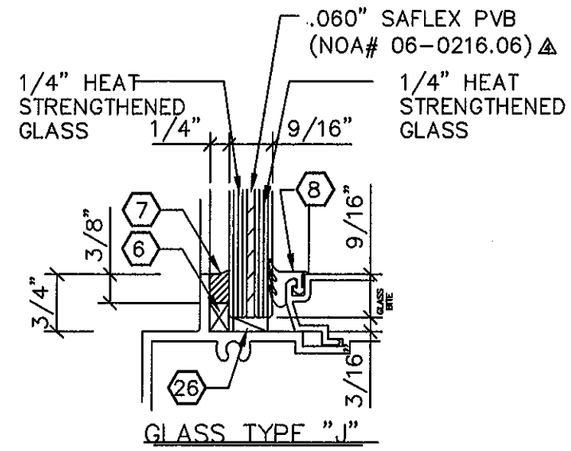

GLASS TYPE "J"

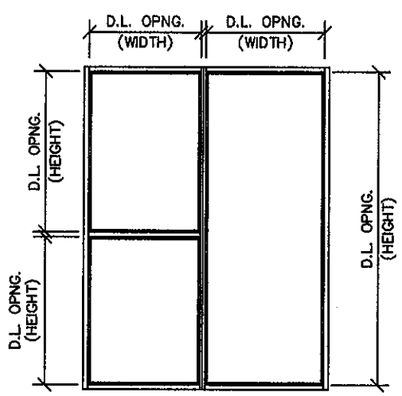

GLASS CHARTS

FOR METRO-DADE OFFICE USE ONLY.

PRODUCT REVISED
as complying with the Florida
Building Code
Acceptance No. 11-1103.06
Expiration Date 3/30/2016
By
Miami Dade Product Control

ENGINEER:
SCOTT WOLTERS
FL PE# 62354
WOLTERS ENGINEERING
(COA# 27194)
1271 GRANT STREET
HOLLYWOOD, FL 33019
SEAL:
NOV 01 2011

REVISIONS:
4 11/18/10
3 7/16/10
2 3/9/06

SCALE: N.T.S.
DRAWN BY: SW
DATE: 10/5/05

CGC
Custom Glass Company
Commercial Contractors
est. 1974
750 Southwest 14th Avenue Pompano Beach, Florida 33069 ph.(954) 781-6565 fax (954) 781-6523

DRAWING TITLE: CGC-6000 SMALL MISSILE IMPACT RESISTANT SYSTEM
DWG. # 6000-SMI
PAGE TITLE:
PAGE NO. 2/11

Glass Type K (1/4" Annealed - .060" Saflex PVB - 1/4" Annealed) Small Missile Only

D.L. OPNG (HEIGHT)	D.L. OPENING (WIDTH)														
	36"	42"	48"	54"	60"	66"	72"	78"	84"	90"	96"	102"	108"	114"	120"
30"	+75,-80	+75,-80	+75,-80	+75,-80	+75,-80	+75,-80	+75,-80	+75,-80	+75,-80	+75,-80	+75,-80	+75,-80	+75,-80	+75,-80	+75,-80
36"	+75,-80	+75,-80	+75,-80	+75,-80	+75,-80	+75,-80	+75,-80	+75,-80	+75,-80	+75,-80	+75,-80	+75,-80	+75,-80	+75,-80	+75,-80
42"	+75,-80	+75,-80	+75,-80	+75,-80	+75,-80	+75,-80	+75,-80	+75,-80	+75,-80	+75,-80	+75,-79.9	+75,-76.6	+73.6,-73.6	+70.7,-70.7	+68.7,-68.7
48"	+75,-80	+75,-80	+75,-80	+75,-80	+75,-80	+75,-80	+75,-80	+75,-80	+75,-79.3	+74.9,-74.9	+71,-71	+67.1,-67.1	---	---	---
54"	+75,-80	+75,-80	+75,-80	+75,-80	+75,-80	+75,-80	+75,-80	+75,-77.5	+73.5,-73.3	+68.4,-68.4	---	---	---	---	---
60"	+75,-80	+75,-80	+75,-80	+75,-80	+75,-80	+75,-80	+75,-77.3	+72.5,-72.5	+68,-68	---	---	---	---	---	---
63"	+75,-80	+75,-80	+75,-80	+75,-80	+75,-80	+75,-80	+75,-75.2	+70.3,-70.3	---	---	---	---	---	---	---
66"	+75,-80	+75,-80	+75,-80	+75,-80	+75,-80	+75,-78.7	+73.3,-73.3	+68.2,-68.2	---	---	---	---	---	---	---
69"	+75,-80	+75,-80	+75,-80	+75,-80	+75,-80	+75,-76.3	+71.5,-71.5	---	---	---	---	---	---	---	---
72"	+75,-80	+75,-80	+75,-80	+75,-80	+75,-77.3	+73.3,-73.3	---	---	---	---	---	---	---	---	---
75"	+75,-80	+75,-80	+75,-80	+75,-79.9	+75,-75.2	+71,-71	---	---	---	---	---	---	---	---	---
78"	+75,-80	+75,-80	+75,-80	+75,-77.5	+72.5,-72.5	+68.2,-68.2	---	---	---	---	---	---	---	---	---
81"	+75,-80	+75,-80	+75,-80	+75,-75.2	+70,-70	---	---	---	---	---	---	---	---	---	---
84"	+75,-80	+75,-80	+75,-79.3	+73.5,-73.3	+68,-68	---	---	---	---	---	---	---	---	---	---
90"	+75,-80	+75,-80	+74.9,-74.9	+68.4,-68.4	---	---	---	---	---	---	---	---	---	---	---
96"	+75,-80	+75,-79.9	+71,-71	---	---	---	---	---	---	---	---	---	---	---	---
102"	+75,-80	+75,-76.6	+67.1,-67.1	---	---	---	---	---	---	---	---	---	---	---	---
108"	+75,-80	+73.6,-73.6	---	---	---	---	---	---	---	---	---	---	---	---	---
114"	+75,-80	+70.7,-70.7	---	---	---	---	---	---	---	---	---	---	---	---	---
120"	+75,-80	+68.7,-68.7	---	---	---	---	---	---	---	---	---	---	---	---	---
126"	+75,-80	---	---	---	---	---	---	---	---	---	---	---	---	---	---

Glass Type L (1/4" Tempered - .060" Saflex PVB - 1/4" tempered) Small Missile Only

D.L. OPNG (HEIGHT)	D.L. OPENING (WIDTH)														
	36"	42"	48"	54"	60"	66"	72"	78"	84"	90"	96"	102"	108"	114"	120"
30"	+90,-130	+90,-130	+90,-130	+90,-130	+90,-130	+90,-130	+90,-130	+90,-130	+90,-130	+90,-130	+90,-130	+90,-130	+90,-130	+90,-130	+90,-130
36"	+90,-130	+90,-130	+90,-130	+90,-130	+90,-130	+90,-130	+90,-130	+90,-130	+90,-130	+90,-130	+90,-130	+90,-130	+90,-130	+90,-130	+90,-130
42"	+90,-130	+90,-130	+90,-130	+90,-130	+90,-130	+90,-130	+90,-130	+90,-130	+90,-130	+90,-130	+90,-130	+90,-130	+90,-130	+90,-130	+90,-130
48"	+90,-130	+90,-130	+90,-130	+90,-130	+90,-130	+90,-130	+90,-130	+90,-130	+90,-130	+90,-130	+90,-130	+90,-130	+90,-130	+90,-130	+90,-130
54"	+90,-130	+90,-130	+90,-130	+90,-130	+90,-130	+90,-130	+90,-130	+90,-130	+90,-130	+90,-130	+90,-130	+90,-130	+90,-130	+90,-130	+90,-130
60"	+90,-130	+90,-130	+90,-130	+90,-130	+90,-130	+90,-130	+90,-130	+90,-130	+90,-130	+90,-130	+90,-130	+90,-130	+90,-130	---	---
63"	+90,-130	+90,-130	+90,-130	+90,-130	+90,-130	+90,-130	+90,-130	+90,-130	+90,-130	+90,-130	+90,-130	+90,-130	---	---	---
66"	+90,-130	+90,-130	+90,-130	+90,-130	+90,-130	+90,-130	+90,-130	+90,-130	+90,-130	+90,-130	+90,-130	---	---	---	---
69"	+90,-130	+90,-130	+90,-130	+90,-130	+90,-130	+90,-130	+90,-130	+90,-130	+90,-130	+90,-130	---	---	---	---	---
72"	+90,-130	+90,-130	+90,-130	+90,-130	+90,-130	+90,-130	+90,-130	+90,-130	+90,-130	+90,-130	---	---	---	---	---
75"	+90,-130	+90,-130	+90,-130	+90,-130	+90,-130	+90,-130	+90,-130	+90,-130	+90,-130	---	---	---	---	---	---
78"	+90,-130	+90,-130	+90,-130	+90,-130	+90,-130	+90,-130	+90,-130	+90,-130	---	---	---	---	---	---	---
81"	+90,-130	+90,-130	+90,-130	+90,-130	+90,-130	+90,-130	+90,-130	+90,-130	---	---	---	---	---	---	---
84"	+90,-130	+90,-130	+90,-130	+90,-130	+90,-130	+90,-130	+90,-130	---	---	---	---	---	---	---	---
90"	+90,-130	+90,-130	+90,-130	+90,-130	+90,-130	+90,-130	+90,-130	---	---	---	---	---	---	---	---
96"	+90,-130	+90,-130	+90,-130	+90,-130	+90,-130	+90,-130	---	---	---	---	---	---	---	---	---
102"	+90,-130	+90,-130	+90,-130	+90,-130	+90,-130	---	---	---	---	---	---	---	---	---	---
108"	+90,-130	+90,-130	+90,-130	+90,-130	+90,-130	---	---	---	---	---	---	---	---	---	---
114"	+90,-130	+90,-130	+90,-130	+90,-130	---	---	---	---	---	---	---	---	---	---	---
120"	+90,-130	+90,-130	+90,-130	+90,-130	---	---	---	---	---	---	---	---	---	---	---
126"	+90,-130	+90,-130	+90,-130	---	---	---	---	---	---	---	---	---	---	---	---

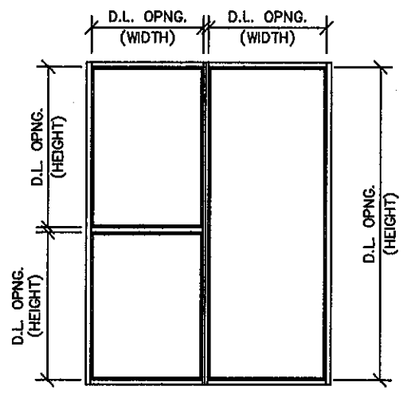

GLASS CHARTS

POSITIVE AND NEGATIVE PRESSURES ON GLASS CHARTS ARE BASED ON TESTED PRESSURE AND ASTM E 1300-04.△3

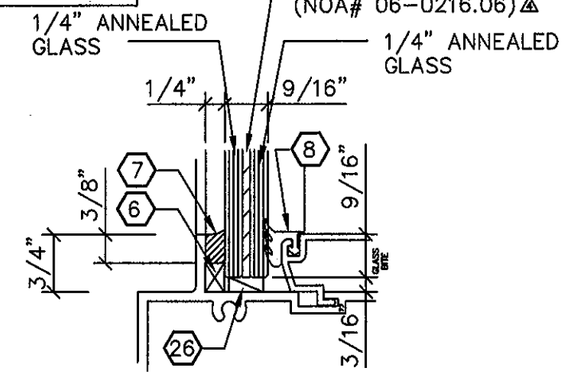

GLASS TYPE "K"

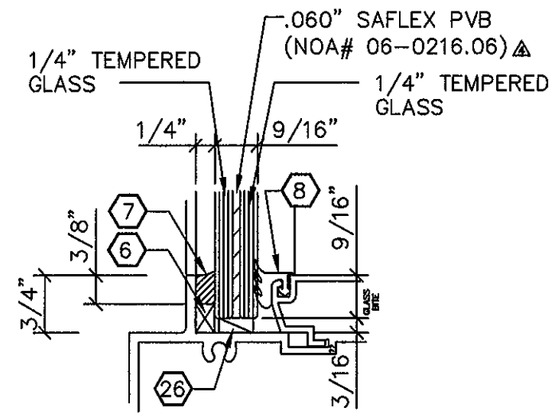

GLASS TYPE "L"

FOR METRO-DADE OFFICE USE ONLY.

PRODUCT REVISED
as complying with the Florida building Code
Acceptance No. 11-1103.06
Expiration Date 3/30/2016
By
Miami Dade Product Control

SEAL:

ENGINEER:
SCOTT WOLTERS
FL PE# 62354

WOLTERS ENGINEERING
(COA# 27194)
1271 GRANT STREET
HOLLYWOOD, FL 33019

NOV 01 2011

REVISIONS:
△5 11/18/10
△3 7/16/10
△2 3/9/06

SCALE: N.T.S.
DRAWN BY: SW
DATE: 10/5/05

CGC
Custom Glass Company
Commercial Contractors
est. 1974

DRAWING TITLE: CGC-6000 SMALL MISSILE IMPACT RESISTANT SYSTEM
DWG. # 6000-SMI
PAGE TITLE:
PAGE NO. 3/11

750 Southwest 14th Avenue Pompano Beach, Florida 33069 ph.(954) 781-6565 fax (954) 781-6523

MULLION PROPERTIES		
PART	Ixx (in^4)	Sxx (in^3)
CGL 6000	7.542	2.387
CGL 6001	7.046	2.226
3/16"x 4" STEEL	2.90 (AL)	0.5
1/4"x 4" STEEL	3.867 (AL)	0.667
1/2"x 4" STEEL	7.733 (AL)	1.333
3/8"x 5" STEEL	11.328 (AL)	1.562

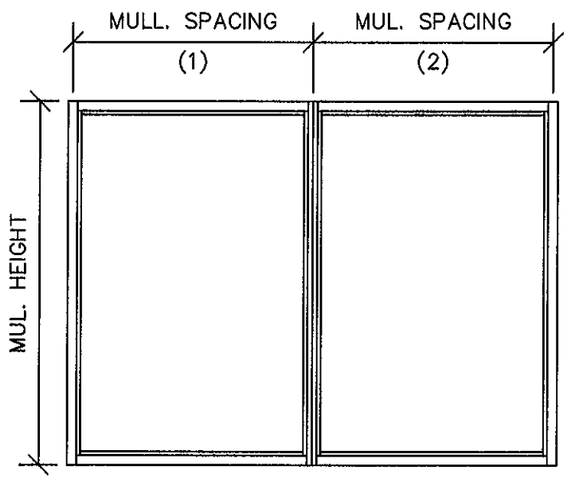

$$\text{WIDTH} = \frac{\text{MUL. SPACE(1)} + \text{MUL. SPACE(2)}}{2}$$

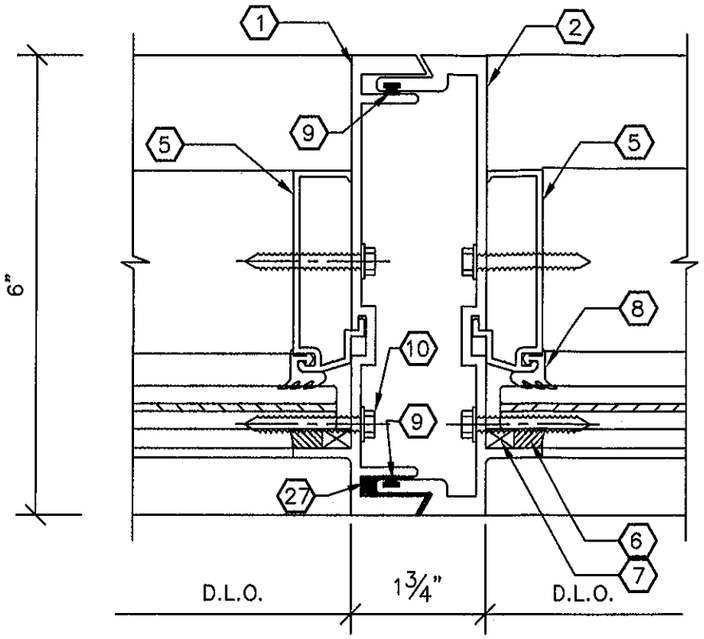

1A / 4 MULLION DETAIL

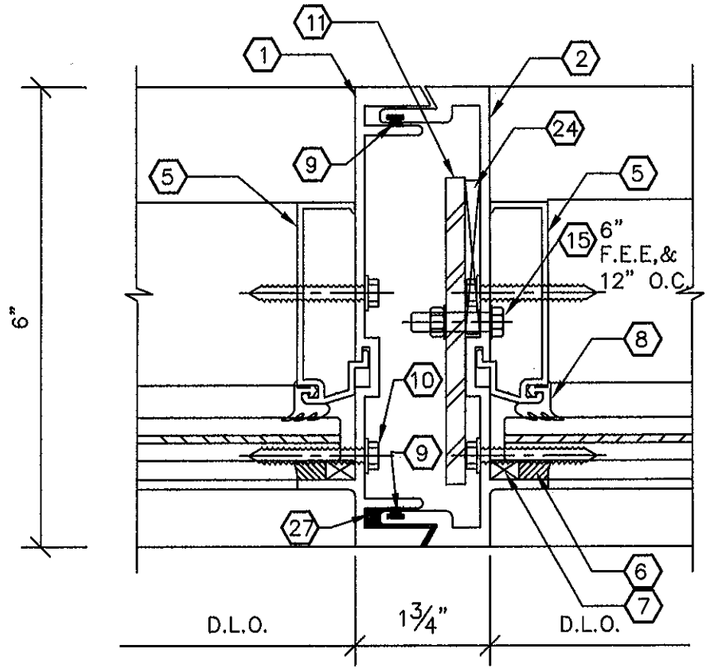

1B / 4 MULLION DETAIL
W/ STEEL REINFORCEMENT TYPE 1
3/16" X 4" FLAT BAR
STL. LENGTH = MULL. LENGTH – 40"

MULLION CHART

FRAME DIMENSIONS HEIGHT	WIDTH	ALLOWABLE DESIGN PRESSURE - PSF DETAIL 1A +	DETAIL 1A -	DETAIL 1B +	DETAIL 1B -
84"	36"	75	80	90	105
	48"	75	80	90	105
	60"	75	80	90	105
	72"	75	80	90	105
	84"	75	80	90	105
96"	36"	75	80	90	105
	48"	75	80	90	105
	60"	75	80	90	105
	72	75	80	90	105
	84	75	80	90	105
108"	36"	75	80	90	105
	48"	75	80	90	105
	60"	75	80	90	105
	72	75	80	90	105
120"	36"	75	80	90	105
	48"	75	80	90	105
	60"	75	80	90	105
	72	-	-	-	-
132"	36	-	-	-	-
	48	-	-	-	-
	60	-	-	-	-
144"	36	-	-	-	-
	48	-	-	-	-
	60	-	-	-	-

OTHER CONFIGURATIONS

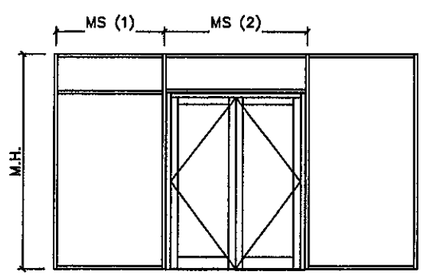

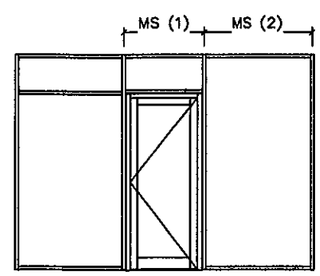

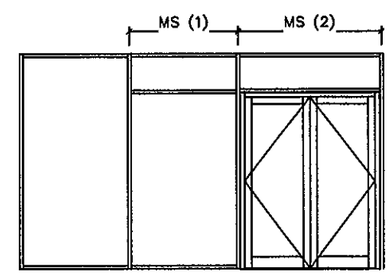

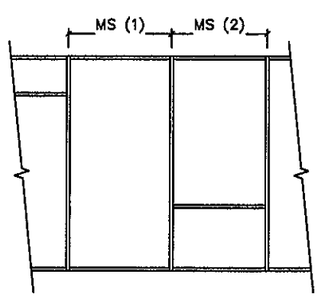

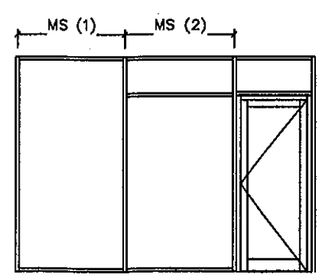

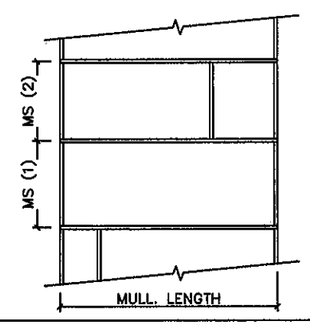

FOR METRO-DADE OFFICE USE ONLY.

PRODUCT REVISED
as complying with the Florida
building Code
Acceptance No. 11-1103.06
Expiration Date 3/30/2016
By
Miami Dade Product Control

SEAL:
ENGINEER:
SCOTT WOLTERS
FL PE# 62354
WOLTERS ENGINEERING
(COA# 27194)
1271 GRANT STREET
HOLLYWOOD, FL 33019
NOV 01 2011

REVISIONS:
4 11/18/10
3 7/16/10
2 3/9/06

SCALE: N.T.S.
DRAWN BY: SW
DATE: 10/5/05

CGC
Custom Glass Company
Commercial Contractors
est. 1974

DRAWING TITLE: CGC-6000 SMALL MISSILE IMPACT RESISTANT SYSTEM
DWG. # 6000-SMI
PAGE TITLE:
PAGE NO. 4/11

750 Southwest 14th Avenue Pompano Beach, Florida 33069 ph.(954) 781-6565 fax (954) 781-6523

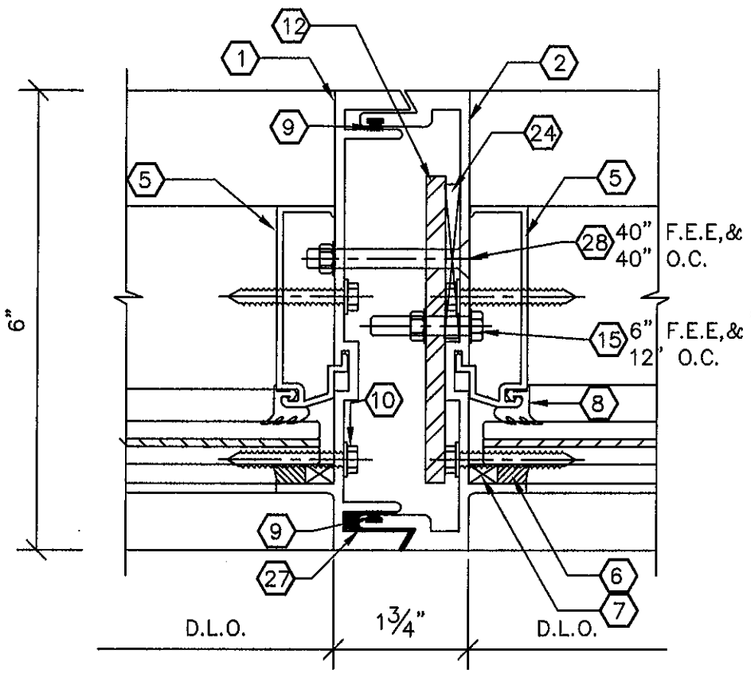

1C / 5 MULLION DETAIL
W/ STEEL REINFORCEMENT TYPE 2
1/4" X 4" FLAT BAR
STL. LENGTH = MULL. LENGTH – 6"

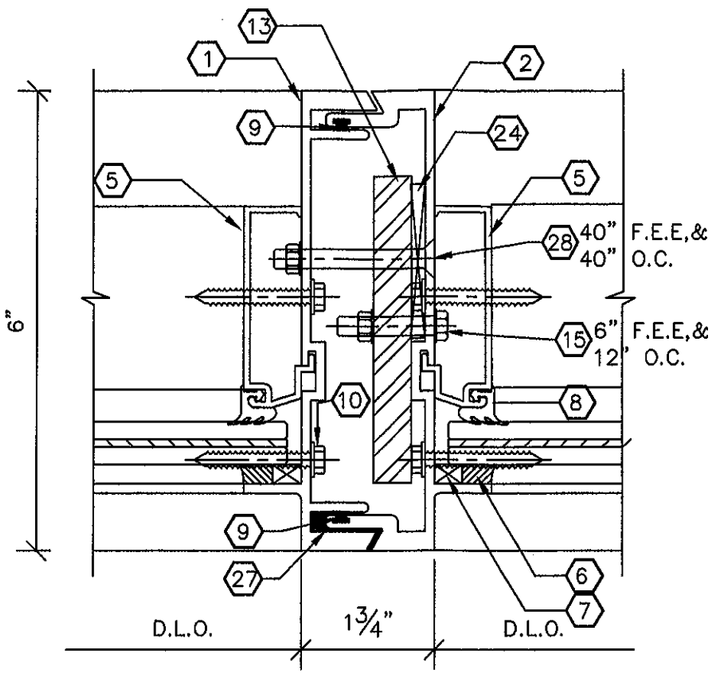

1D / 5 MULLION DETAIL
W/ STEEL REINFORCEMENT TYPE 3
1/2" X 4" FLAT BAR
STL. LENGTH = MULL. LENGTH – 6"

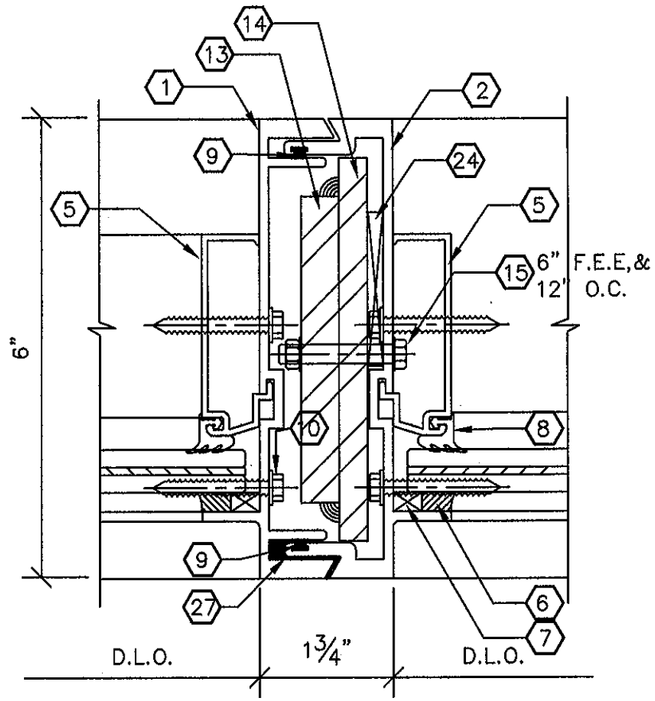

1E / 5 MULLION DETAIL
W/ STEEL REINFORCEMENT TYPE 4
1/2" X 4" & 3/8" X 5 FLAT BAR
STL. LENGTH = MULL. LENGTH – 24"

MULLION CHART

FRAME DIMENSIONS		ALLOWABLE DESIGN PRESSURE (PSF)					
		DETAIL 1C (or 6/11)		DETAIL 1D		DETAIL 1E	
HEIGHT	WIDTH	+	-	+	-	+	-
84"	36"	90	105	90	130	90	130
	48"	90	105	90	130	90	130
	60"	90	105	90	130	90	130
	72	90	105	90	130	90	130
	84	90	105	90	130	90	130
96"	36"	90	105	90	130	90	130
	48"	90	105	90	130	90	130
	60"	90	105	90	130	90	130
	72	90	105	90	130	90	130
	84	90	105	90	130	90	130
108"	36"	90	105	90	130	90	130
	48"	90	105	90	130	90	130
	60"	90	105	90	130	90	130
	72	90	105	90	130	90	130
120"	36"	90	105	90	130	90	130
	48"	90	105	90	130	90	130
	60"	90	105	90	130	90	130
	69 5/8"	90	105	-	-	90	105
	72					90	105
132"	36	-	-	-	-	90	105
	48	-	-	-	-	90	105
	60	-	-	-	-	90	105
144"	36	-	-	-	-	90	105
	48	-	-	-	-	90	105
	60	-	-	-	-	90	105

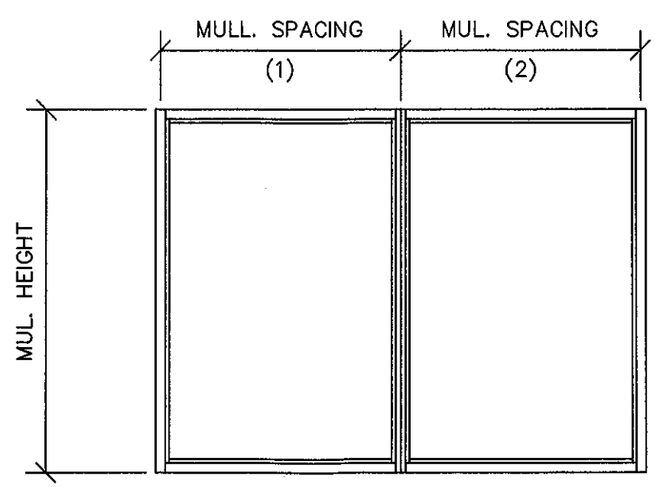

$$\text{WIDTH} = \frac{\text{MUL. SPACE(1)} + \text{MUL. SPACE(2)}}{2}$$

MULLION PROPERTIES

PART	Ixx (in^4)	Sxx (in^3)
CGL 6000	7.542	2.387
CGL 6001	7.046	2.226
3/16"x 4" STEEL	2.90 (AL)	0.5
1/4"x 4" STEEL	3.867 (AL)	0.667
1/2"x 4" STEEL	7.733 (AL)	1.333
3/8"x 5" STEEL	11.328 (AL)	1.562

FOR METRO-DADE OFFICE USE ONLY.

PRODUCT REVISED
as complying with the Florida
building Code
Acceptance No. 11-1103.06
Expiration Date 3/30/2016
By
Miami Dade Product Control

SEAL:

ENGINEER:
SCOTT WOLTERS
FL PE# 62354

WOLTERS ENGINEERING
(COA# 27194)
1271 GRANT STREET
HOLLYWOOD, FL 33019

NOV 01 2011

REVISIONS:
4 11/18/10
3 7/16/10
2 3/9/06

SCALE: N.T.S.
DRAWN BY: SW
DATE: 10/5/05

CGC
Custom Glass Company
Commercial Contractors
est. 1974

DRAWING TITLE: CGC-6000 SMALL MISSILE IMPACT RESISTANT SYSTEM
DWG. # 6000-SMI
PAGE TITLE:
PAGE NO. 5/11

750 Southwest 14th Avenue Pompano Beach, Florida 33069 ph.(954) 781-6565 fax (954) 781-6523

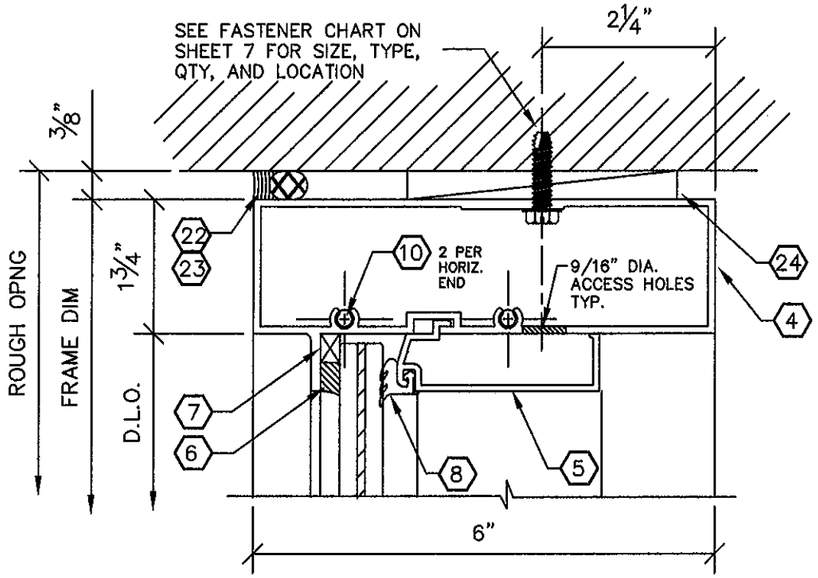

2/6 HEAD DETAIL

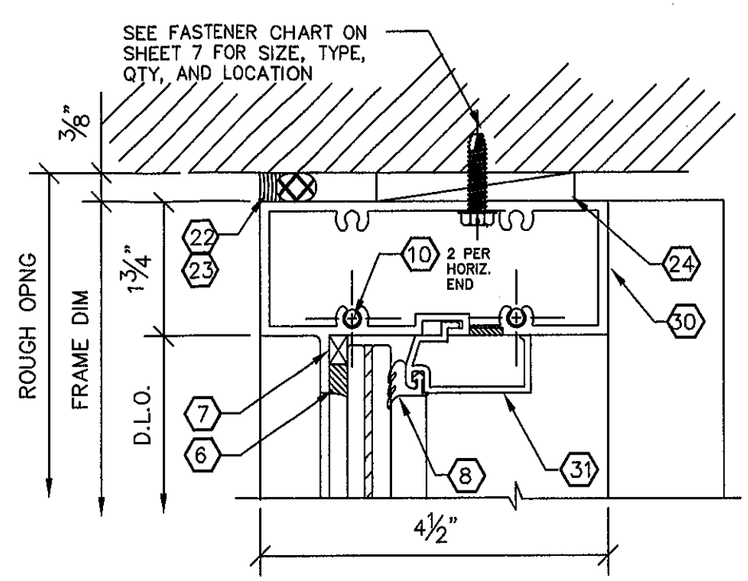

2A/6 OPTIONAL HEAD DETAIL

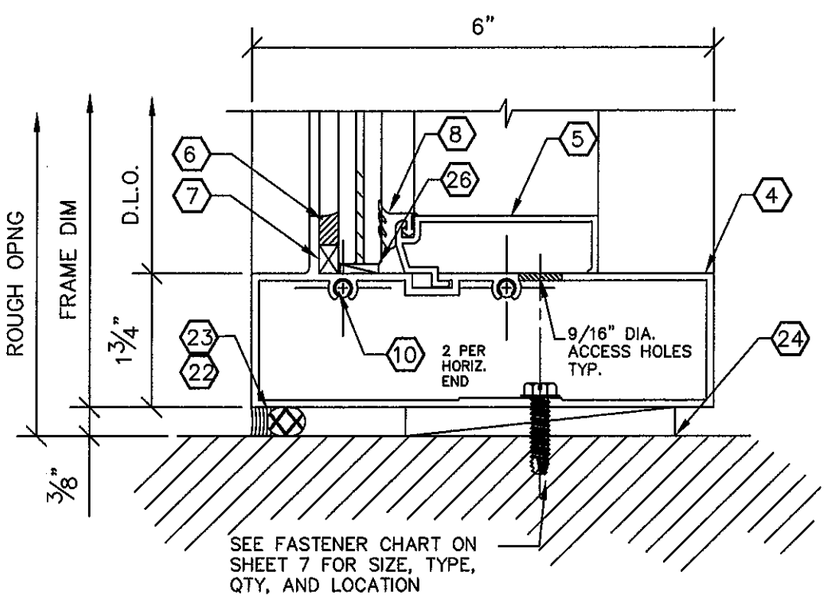

3/6 SILL DETAIL

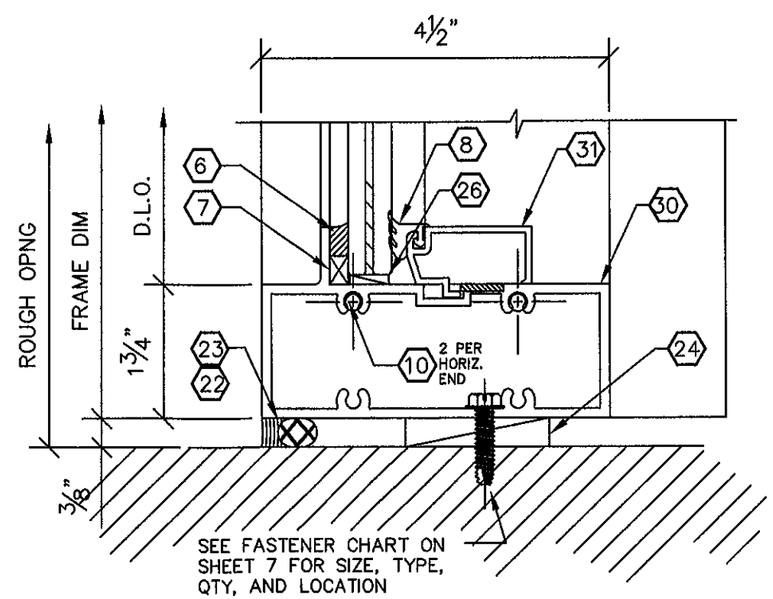

3A/6 OPTIONAL SILL DETAIL

FOR METRO-DADE OFFICE USE ONLY.

PRODUCT REVISED
as complying with the Florida Building Code
Acceptance No. 11-1103.06
Expiration Date 3/30/2016
By
Miami Dade Product Control

SEAL:

ENGINEER:
SCOTT WOLTERS
FL PE# 62354

WOLTERS ENGINEERING
(COA# 27194)
1271 GRANT STREET
HOLLYWOOD, FL 33019

NOV 01 2011

REVISIONS:
4 11/18/10
3 7/16/10
2 3/9/06

SCALE: N.T.S.
DRAWN BY: SW
DATE: 10/5/05

CGC
Custom Glass Company
Commercial Contractors
est. 1974

DRAWING TITLE:
CGC-6000
SMALL MISSILE
IMPACT RESISTANT SYSTEM

DWG. # 6000-SMI

PAGE TITLE:

PAGE NO. 6/11

750 Southwest 14th Avenue Pompano Beach, Florida 33069 ph.(954) 781-6565 fax (954) 781-6523

WOOD BUCKS AND METAL STRUCTURE NOT BY CGC. WOOD BUCKS MUST BE PROPERLY ATTACHED TO SUBSTRATE, TO TRANSFER LOADS IMPOSED BY GLAZING SYSTEM TO THE BUILDING STRUCTURE.

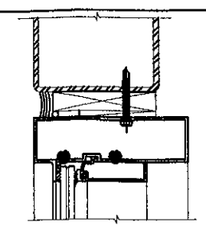

TYPE "B" IN STEEL OR ALUM. WITH WOOD BUCK

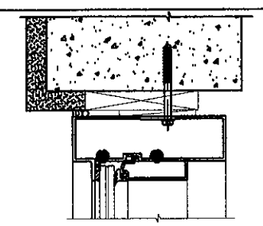

TYPE "C" IN CONCRETE WITH WOOD BUCK

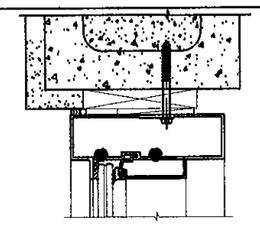

TYPE "C" IN CMU BLOCK WITH WOOD BUCK

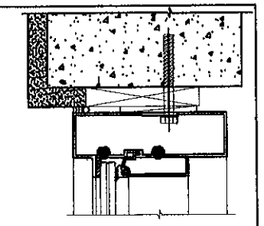

TYPE "D" IN CONCRETE WITH WOOD BUCK

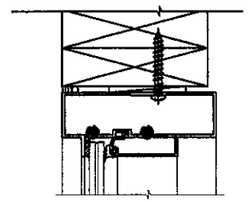

TYPE "A" IN WOOD

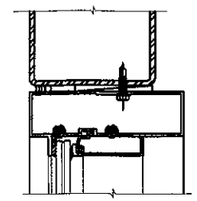

TYPE "B" IN STEEL OR ALUMINUM

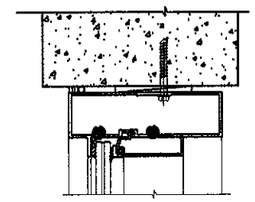

TYPE "C" IN CONCRETE

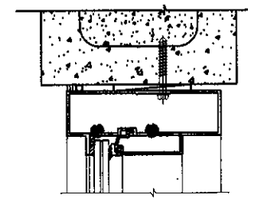

TYPE "C" IN CMU BLOCK

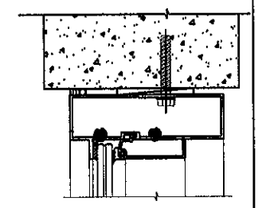

TYPE "D" IN CONCRETE

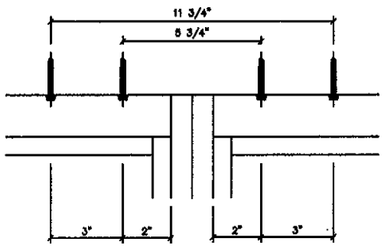

INTERMEDIATE VERTICAL

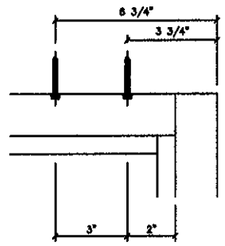

JAMB VERTICAL

ANCHOR PATTERN 2

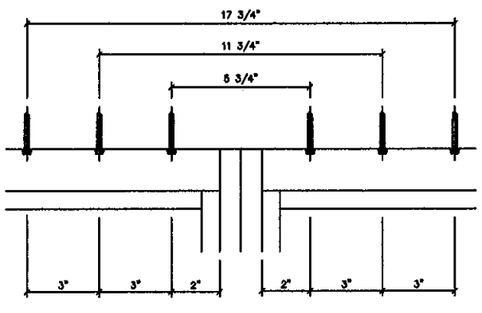

INTERMEDIATE VERTICAL

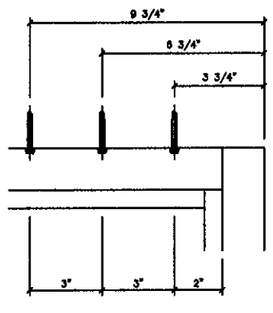

JAMB VERTICAL

ANCHOR PATTERN 3 △4

PERIMETER FASTENER CHART

FRAME DIMENSIONS HEIGHT	WIDTH	ALLOWABLE DESIGN PRESSURE (PSF) — VALUES ARE FOR FASTENERS WITH SHIM SPACINGS UP TO 3/8" MAX. TYPE A (WOOD) ANCHOR PATTERN #2	TYPE A (WOOD) ANCHOR PATTERN #3	TYPE B (ALUM. OR STEEL) ANCHOR PATTERN #2	TYPE B (ALUM. OR STEEL) ANCHOR PATTERN #3	TYPE C (CONCRETE OR CMU) ANCHOR PATTERN #2	TYPE C (CONCRETE OR CMU) ANCHOR PATTERN #3	TYPE D (CONCRETE) ANCHOR PATTERN #2	TYPE D (CONCRETE) ANCHOR PATTERN #3	ALTERNATE VALUES FOR SHIM SPACING 1/4" OR LESS — TYPE B (ALUM. OR STEEL) ANCHOR PATTERN #2	TYPE B (ALUM. OR STEEL) ANCHOR PATTERN #3	TYPE C (CONCRETE) ANCHOR PATTERN #2	TYPE C (CONCRETE) ANCHOR PATTERN #3	TYPE C (CMU BLOCK) ANCHOR PATTERN #2	TYPE C (CMU BLOCK) ANCHOR PATTERN #3
84"	36"	88.4	130.0	111.6	130.0	65.9	98.8	130.0	130.0	130.0	130.0	130.0	130.0	100.6	130.0
	48"	66.3	99.4	83.7	125.6	49.4	74.1	130.0	130.0	130.0	130.0	109.7	130.0	75.4	113.1
	60"	53.0	79.5	66.9	100.4	39.5	59.3	130.0	130.0	109.4	130.0	87.8	130.0	60.3	90.5
	72	44.2	66.3	55.8	83.7	33.0	49.4	130.0	130.0	91.2	130.0	73.1	109.7	50.3	75.4
	84	37.9	56.8	47.8	71.8	28.2	42.4	130.0	130.0	78.2	117.3	62.7	94.0	43.1	64.7
96"	36"	77.3	116.0	97.7	130.0	57.7	86.5	130.0	130.0	130.0	130.0	128.0	130.0	88.0	130.0
	48"	58.0	87.0	73.2	109.9	43.2	64.9	130.0	130.0	119.7	130.0	96.0	130.0	66.0	99.0
	60"	46.4	69.6	58.6	87.9	34.6	51.9	130.0	130.0	95.8	130.0	76.8	115.2	52.8	79.2
	72	38.7	58.0	48.8	73.2	28.8	43.3	130.0	130.0	79.8	119.7	64.0	96.0	44.0	66.0
	84	33.1	49.7	41.8	62.8	24.7	37.1	105.0	105.0	68.4	102.6	54.9	82.3	37.7	56.6
108"	36"	68.7	103.1	86.8	130.0	51.2	76.9	130.0	130.0	130.0	130.0	113.8	130.0	78.2	117.3
	48"	51.5	77.3	65.1	97.7	38.4	57.7	130.0	130.0	106.4	130.0	85.3	128.0	58.7	88.0
	60"	41.2	61.9	52.1	78.1	30.8	46.1	130.0	130.0	85.1	127.7	68.3	102.4	47.0	70.4
	72	34.4	51.5	43.4	65.1	25.6	38.4	130.0	130.0	70.9	106.4	56.9	85.3	39.1	58.7
	84	29.5	44.2	37.2	55.8	22.0	33.0	105.0	105.0	60.8	91.2	48.8	73.1	33.5	50.3
120"	36	61.9	92.8	78.1	79.5	46.1	69.2	130.0	130.0	127.7	130.0	102.4	130.0	70.4	105.6
	48"	46.4	69.6	58.6	79.5	34.6	51.9	130.0	130.0	95.8	130.0	76.8	115.2	52.8	79.2
	60"	37.1	55.7	46.9	70.3	27.7	41.5	130.0	130.0	76.6	114.9	61.4	92.2	42.2	63.4
	72	30.9	46.4	39.0	58.6	23.1	34.6	105.0	105.0	63.8	95.8	51.2	76.8	35.2	52.8
132"	36	56.2	84.4	64.2	64.2	41.9	48.4	105.0	105.0	105.0	105.0	93.0	105.0	64.0	96.0
	48	42.2	63.3	53.3	64.2	31.4	47.2	105.0	105.0	87.1	105.0	69.8	104.7	48.0	72.0
	60	33.7	50.6	42.6	63.9	25.2	37.8	105.0	105.0	69.6	104.5	55.9	83.8	32.0	57.6
	72	28.1	42.2	35.5	53.2	21.0	31.4	105.0	105.0	58.0	87.0	46.5	69.8	27.9	48.0
144"	36	51.5	77.3	64.2	64.2	38.4	48.4	105.0	105.0	105.0	105.0	85.3	105.0	64.0	105.0
	48	38.7	58.0	48.8	64.2	28.8	43.3	105.0	105.0	79.8	105.0	64.0	96.0	44.0	66.0
	60	30.9	46.4	39.0	58.6	23.1	34.6	105.0	105.0	63.8	95.8	51.2	76.8	35.2	52.8

TYPICAL ANCHORS

TYPE A: #14 PAN HEAD SHEET METAL SCREW OR WOOD SCREW INTO WOOD WITH 1 1/2" EMBEDMENT, 1 3/4" EDGE DISTANCE

TYPE B: 1/4"–20 HEX HEAD THREAD FORMING SCREW. 1/4" PENETRATION THROUGH STEEL OR ALUMINUM, 3/4" EDGE DISTANCE.

TYPE C: 1/4" HEX HEAD TAPCON (BY ITW/BUILDEX) DIRECTLY INTO CONCRETE/CMU, OR THRU WOOD BUCK INTO CONCRETE/CMU, WITH 1 3/4" EMBEDMENT, 2 1/2" EDGE DISTANCE.

TYPE D: 3/8" POWERS WEDGE BOLT DIRECTLY INTO CONCRETE, OR THRU WOOD BUCK INTO CONCRETE, WITH 2" EMBEDMENT, 3 3/4" EDGE DISTANCE.

FOR METRO-DADE OFFICE USE ONLY.

PRODUCT REVISED
as complying with the Florida Building Code
Acceptance No. 11-1103.06
Expiration Date 3/30/2016
By
Miami Dade Product Control

ENGINEER:
SCOTT WOLTERS
FL PE# 62354
WOLTERS ENGINEERING
(COA# 27194)
1271 GRANT STREET
HOLLYWOOD, FL 33019

SEAL: NOV 01 2011

REVISIONS:
△4 11/18/10
△3 7/16/10
△2 3/9/06

SCALE: N.T.S.
DRAWN BY: SW
DATE: 10/3/05

Custom Glass Company
Commercial Contractors
est. 1974
750 Southwest 14th Avenue Pompano Beach, Florida 33069 ph.(954) 781-6565 fax (954) 781-6523

DRAWING TITLE: CGC-6000 SMALL MISSILE IMPACT RESISTANT SYSTEM
DWG. # 6000-SMI
PAGE TITLE:
PAGE NO. 7/11

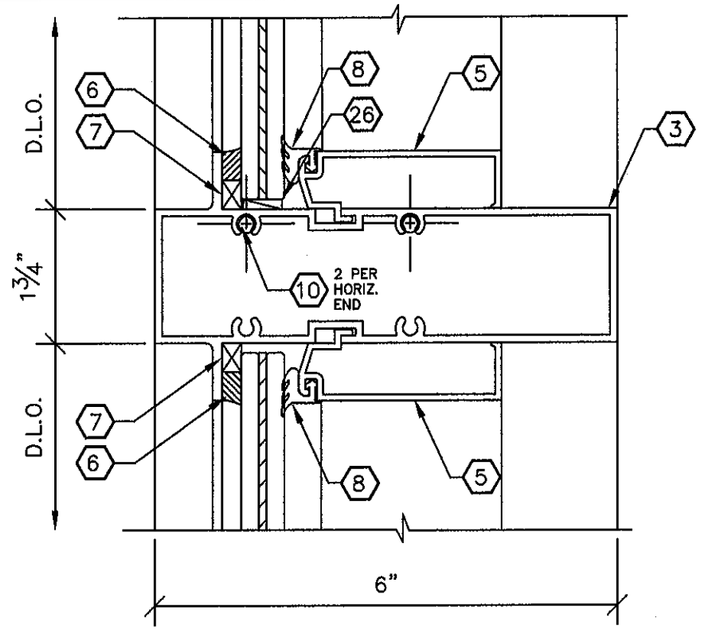

4/8 HORIZONTAL DETAIL

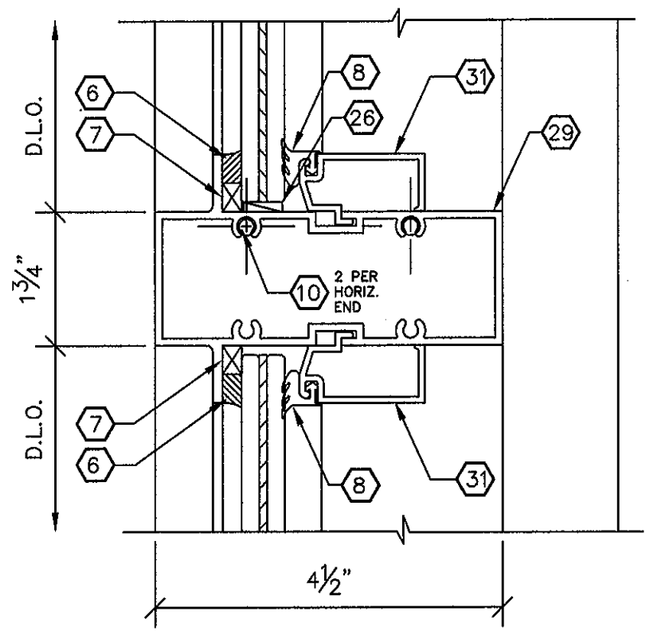

4A/8 OPTIONAL HORIZONTAL DETAIL

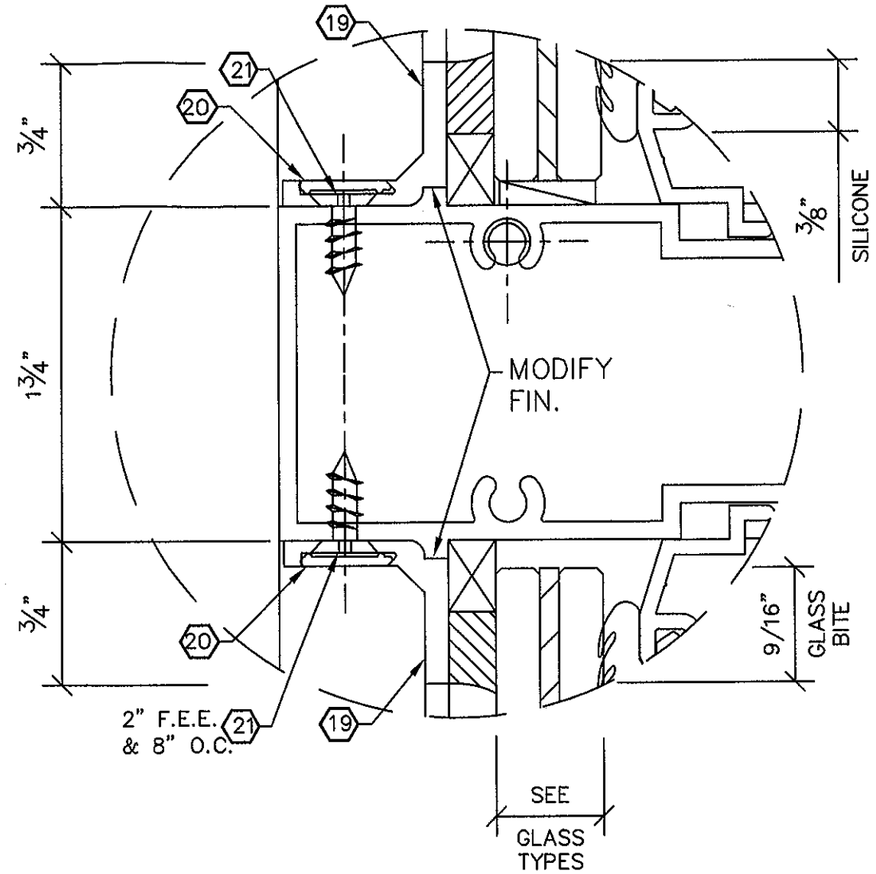

ALTERNATE GLAZING DETAIL
FOR HEAD,HORIZONTAL, SILL, VERTICAL, AND JAMB.

FOR METRO-DADE OFFICE USE ONLY.

PRODUCT REVISED
as complying with the Florida
Building Code
Acceptance No. 11-103.06
Expiration Date 3/30/2016
By
Miami Dade Product Control

ENGINEER:
SCOTT WOLTERS
FL PE# 62354
WOLTERS ENGINEERING
(COA# 27194)
1271 GRANT STREET
HOLLYWOOD, FL 33019
SEAL:
NOV 01 2011

REVISIONS:
4 11/18/10
3 7/16/10
2 3/9/06

SCALE: N.T.S.
DRAWN BY: SW
DATE: 10/5/05

CGC
Custom Glass Company
Commercial Contractors
est. 1974

DRAWING TITLE: CGC-6000 SMALL MISSILE IMPACT RESISTANT SYSTEM
DWG. # 6000-SMI
PAGE TITLE:
PAGE NO. 8/11

750 Southwest 14th Avenue Pompano Beach, Florida 33069 ph.(954) 781-6565 fax (954) 781-6523

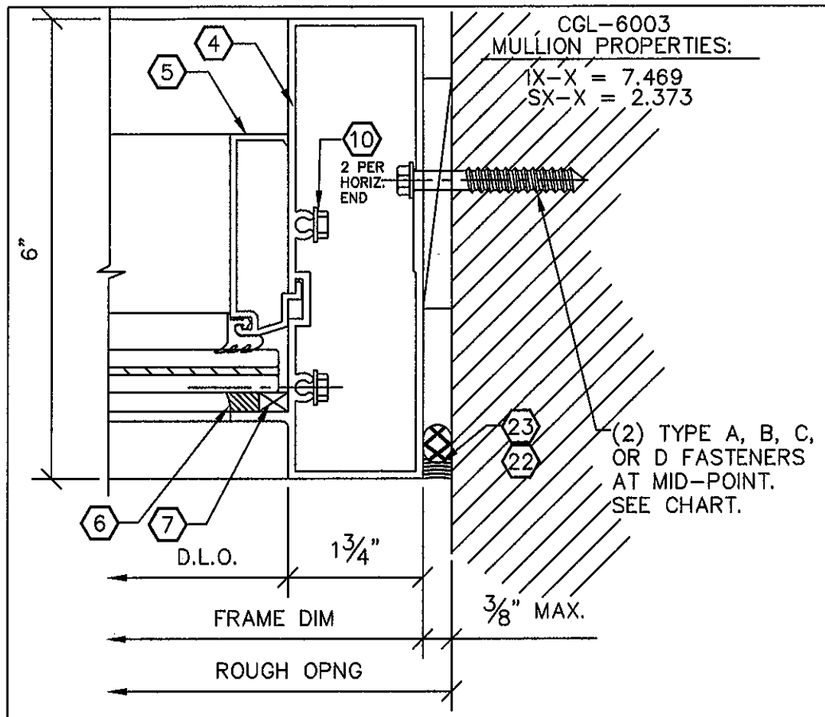

5 / 10 JAMB DETAIL

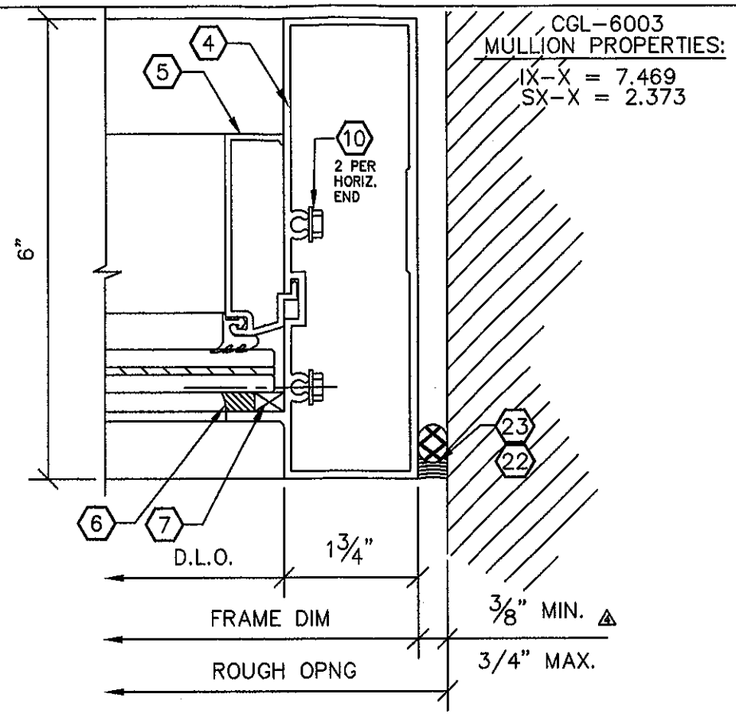

5B / 10 JAMB DETAIL △ (NO FASTENERS)

JAMB MULLION CHART - DETAIL 5B

CAULK MATERIAL:		SIKAFLEX 1A or TREMCO DYMONIC		DOW 790 or DOW 795	
CAULK JOINT WIDTH:		3/8" - 1/2"	1/2" - 3/4"	3/8" - 1/2"	1/2" - 3/4"
FRAME DIMENSIONS HEIGHT	WIDTH	ALLOWABLE DESIGN PRESSURE (PSF)			
96"	12"	130	130	130	130
	18"	130	130	130	130
	24"	114	130	130	130
	30"	91.2	121.6	130	130
	36"	76	101.3	113.3	130
	42"	65.1	86.8	97.1	129.4
108"	12"	130	130	130	130
	18"	94.9	126.5	130	130
	24"	71.2	94.9	106.1	130
	30"	56.9	75.9	84.9	113.1
	36"	47.4	63.2	70.7	94.3
	42"	40.7	54.2	60.6	80.8
120"	12"	93.4	124.5	130	130
	18"	62.3	83	92.8	123.7
	24"	46.7	62.2	69.6	92.8
	30"	37.4	49.8	55.7	74.2
	36"	31.1	41.5	46.4	61.9
132"	12"	63.8	85	95	105
	18"	42.5	56.7	63.4	84.5
	24"	31.9	42.5	47.5	63.4
	30"	25.5	34	38	50.7
144"	12"	45	60	67.1	89.5
	18"	30	40	44.7	59.7
	24"	22.5	30	33.6	44.7
	30"	18	24	26.8	35.8

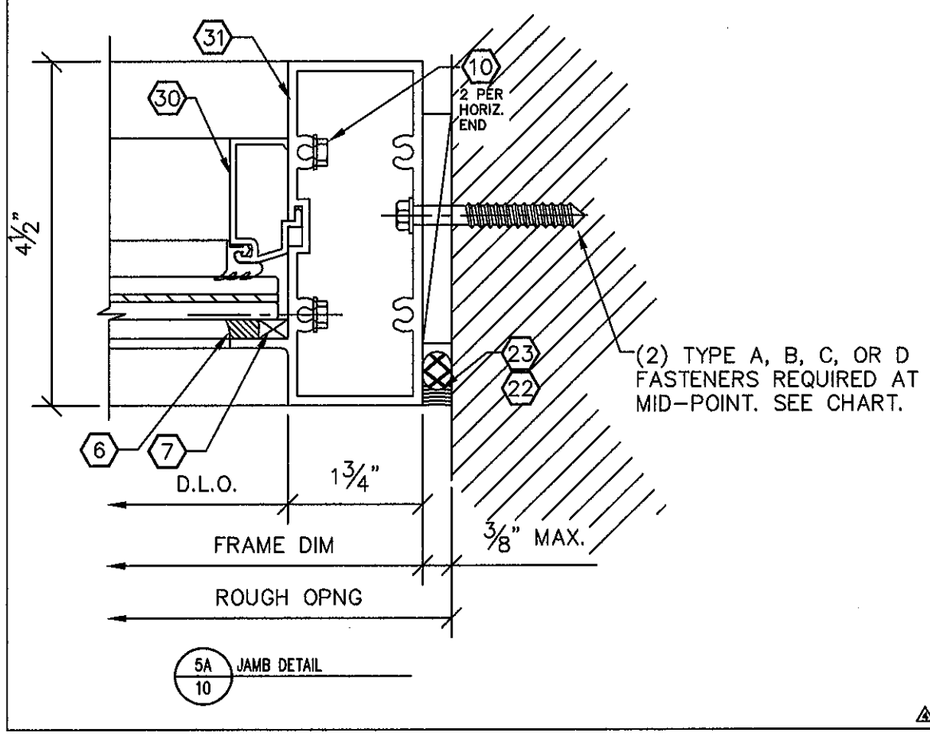

5A / 10 JAMB DETAIL

JAMB MULLION CHART - DETAILS 5 & 5A

FRAME DIMENSIONS HEIGHT	WIDTH	ALLOWABLE DESIGN PRESSURE (PSF) (2) TYPE A (WOOD)	(2) TYPE B (METAL)	(2) TYPE C (CONC/CMU)	(2) TYPE D (CONCRETE)
84"	12"	106	130	69.8	130
	18"	70.7	89.2	52.7	130
	24"	53.0	66.9	39.5	130
	30"	42.4	53.5	31.6	130
	36"	35.3	44.6	26.3	130
	42"	30.3	38.2	22.6	110
96"	12"	92.8	117	69.1	130
	18"	61.8	78.1	46.1	130
	24"	46.4	58.4	34.5	130
	30"	37.1	46.9	27.7	130
	36"	30.9	39.0	23.0	112.5
	42"	26.5	33.5	19.8	96.4
108"	12"	82.4	104	61.4	130
	18"	55.0	69.3	40.9	130
	24"	41.2	52.0	30.7	130
	30"	33.0	41.6	24.6	120
	36"	37.5	34.7	20.5	100
	42"	23.5	29.8	17.6	85.7
120"	12"	74.2	93.6	55.3	130
	18"	49.5	62.4	36.9	130
	24"	37.1	46.8	27.6	130
	30"	29.7	37.5	22.1	108
	36"	24.7	31.2	18.4	90.0
132"	12"	67.4	113.5	67.0	105
	18"	45.0	75.7	44.7	105
	24"	33.7	56.8	33.5	105
	30"	27.0	42.6	25.1	98.1
144"	12"	61.8	78.1	46.1	105
	18"	41.2	52.0	30.7	105
	24"	30.9	39.0	23.0	105
	30"	24.7	31.2	18.4	89.9

△

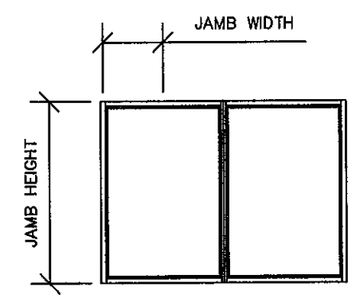

FOR METRO-DADE OFFICE USE ONLY.

PRODUCT REVISED
as complying with the Florida
Building Code
Acceptance No. 11-1103.06
Expiration Date 3/30/2016
By
Miami Dade Product Control

SEAL:
ENGINEER:
SCOTT WOLTERS
FL PE# 62354
WOLTERS ENGINEERING
(COA# 27194)
1271 GRANT STREET
HOLLYWOOD, FL 33019
NOV 01 2011

REVISIONS:
△4 11/18/10
△3 7/16/10
△2 3/9/06

SCALE: N.T.S.
DRAWN BY: SW
DATE: 10/5/05

CGC
Custom Glass Company
Commercial Contractors
est. 1974

DRAWING TITLE: CGC-6000 SMALL MISSILE IMPACT RESISTANT SYSTEM
DWG. # 6000-SMI
PAGE TITLE:
PAGE NO. 9/11

750 Southwest 14th Avenue Pompano Beach, Florida 33069 ph.(954) 781-6565 fax (954) 781-6523

MATERIALS

ITEM NO.	PART NO.	QTY.	DESCRIPTION	MATERIAL	MFGR / SUPPLIER / REMARKS
1	CGL-6000		FEMALE MULLION	6063-T6	CUSTOM GLASS
2	CGL-6001		MALE MULLION	6063-T6	CUSTOM GLASS
3	CGL-6002		HORIZONTAL	6063-T6	CUSTOM GLASS
4	CGL-6003		PERIMETER HEAD, SILL & JAMB	6063-T6	CUSTOM GLASS
5	CGL-6004		GLAZING STOP	6063-T6	CUSTOM GLASS
6	DC-995		STRUCTURAL SEALANT	SILICONE	DOW CORNING
6	PROGLAZE		STRUCTURAL SEALANT	SILICONE	TREMCO
6	SPECTUM II		STRUCTURAL SEALANT	SILICONE	TREMCO
7	TAPE		1/4" X 3/8" FOAM TAPE (ADHESIVE ONE SIDE)		H.O. PRODUCTS
8	H63		EXTRUDED GASKET	VINYL	UNIVERSAL RUBBER
9	HI-FIN		7900 SERIES	PILE	SCHLEGEL
10	FASTENER		#12 X 1 1/2 HWH SMS (1 1/4" IN SPLINE)		I.S.C.
11	TYPE 1		3/16" X 4" FLAT BAR	A36 STEEL	W/ SHOP PRIMER
12	TYPE 2		1/4" X 4" FLAT BAR	A36 STEEL	W/ SHOP PRIMER
13	TYPE 3		1/2" X 4" FLAT BAR	A36 STEEL	W/ SHOP PRIMER
14	TYPE 4		3/8" X 5" FLAT BAR	A36 STEEL	W/ SHOP PRIMER
15	FASTENER		1/4-20 X 1 1/2" HD MS	SAE GR. 2	
16	FASTENER		1/4-20 X 1 3/4" HD MS	SAE GR. 2	
18			1/4" DIA, HEX NUT	SAE GR. 2	
19	CGL-4505		3/4" APPLIED SPANDREL ADAPTOR	6063-T6	CUSTOM GLASS
20	CGL-4506		APPLIED COVER	6063-T6	CUSTOM GLASS
21	FASTENER		#10 X 1/2" FH SMS (UNDER CUT)	SAE GR. 2	
22	SEALANT		WEATHER SEAL	SIKAFLEX 1A	SIKA
23			BACKER ROD OPEN CELL	POLYETHYLENE	TUNDRA
24	SHIM		SHIM	PLASTIC	
25	SM5504		NARROW JOINT SEALANT	ACRYL-P	SCHNEE-MOOREHEAD
26	SET BLK		3/16" x 1/2" x 4" LONG SETTING BLOCK	EPDM	AT 1/4 POINTS
27	SEALANT		SIKAFLEX 1A	CAULK	SIKA
28	FASTENER		1/4"-20 x 2" FH MACHINE SCREW	SAE GR. 2	I.S.C.
29	CGL-4502		4 1/2" HORIZONTAL	6063-T6	CUSTOM GLASS
30	CGL-4503		4 1/2" HEAD/SILL/JAMB	6063-T6	CUSTOM GLASS
31	CGL-4504		4 1/2" GLAZING STOP	6063-T6	CUSTOM GLASS

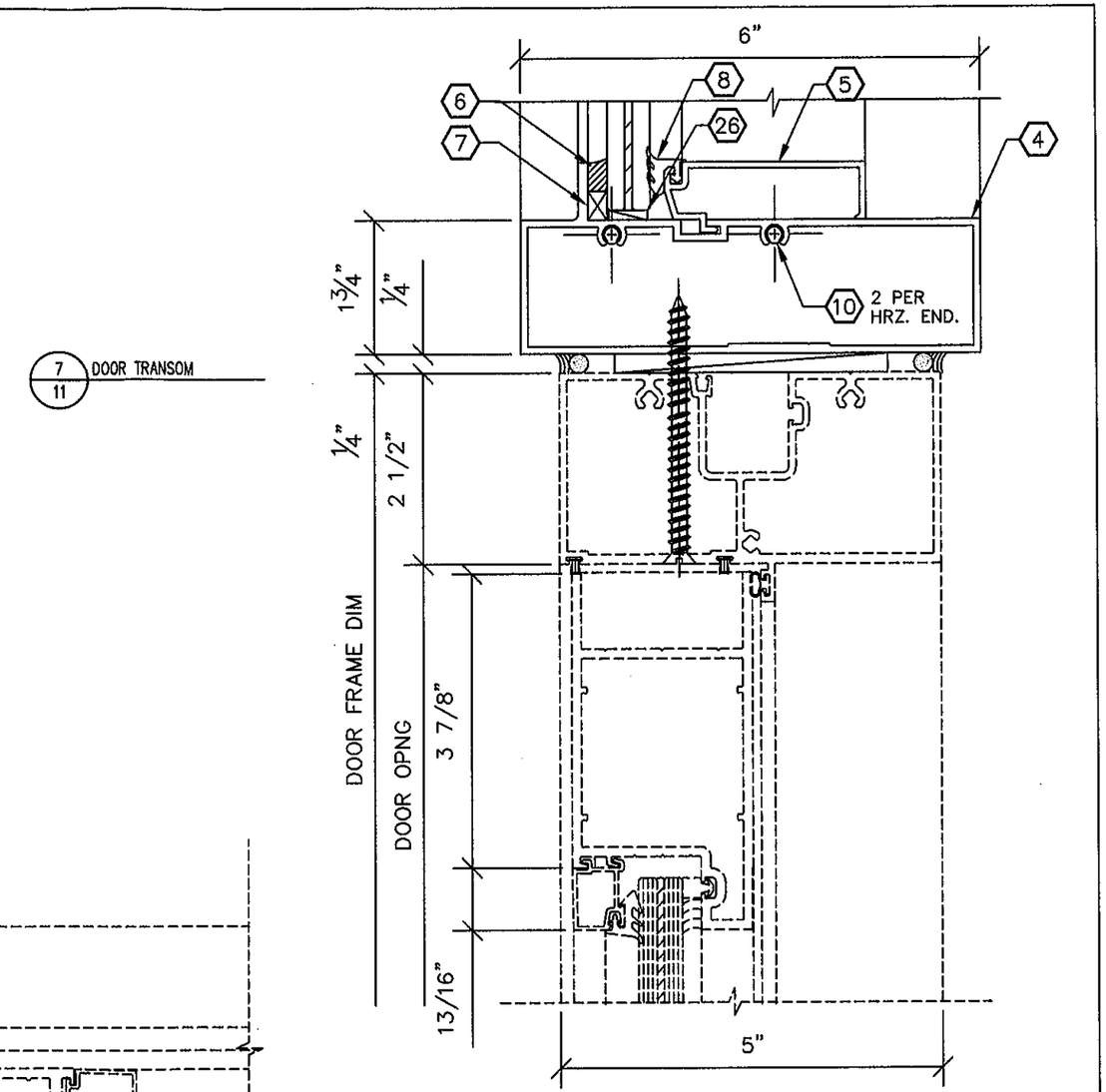

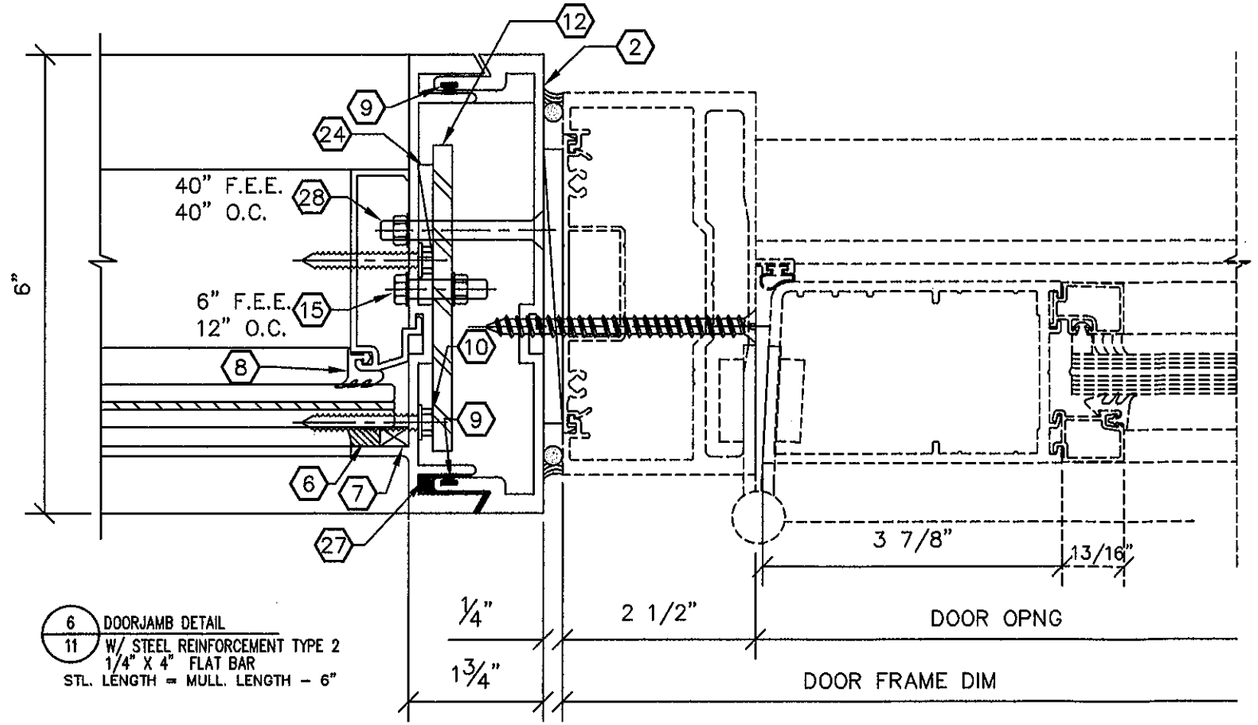

6/11 DOORJAMB DETAIL
W/ STEEL REINFORCEMENT TYPE 2
1/4" X 4" FLAT BAR
STL. LENGTH = MULL. LENGTH – 6"

PLEASE NOTE: YKK DOOR DETAILS ARE SHOWN FOR REFERENCE ONLY. ANY MIAMI–DADE APPROVED DOOR MAY BE USED WITH THIS SYSTEM. PLEASE SEE DOOR APPROVAL FOR FASTENER TYPE AND LOCATION.

FOR METRO–DADE OFFICE USE ONLY.

PRODUCT REVISED
as complying with the Florida
Building Code
Acceptance No. 11-1103.06
Expiration Date 3/30/2016
By
Miami Dade Product Control

SEAL:

ENGINEER:
SCOTT WOLTERS
FL PE# 62354

WOLTERS ENGINEERING
(COA# 27194)
1271 GRANT STREET
HOLLYWOOD, FL 33019

NOV 01 2011

REVISIONS:
4 11/18/10
3 7/16/10
2 3/9/06

SCALE: N.T.S.
DRAWN BY: SW
DATE: 10/5/05

CGC
Custom Glass Company
Commercial Contractors
est. 1974

750 Southwest 14th Avenue Pompano Beach, Florida 33069 ph.(954) 781–6565 fax (954) 781–6523

DRAWING TITLE:
CGC–6000
SMALL MISSILE
IMPACT RESISTANT SYSTEM

DWG. #
6000–SMI

PAGE TITLE:

PAGE NO.
10/11

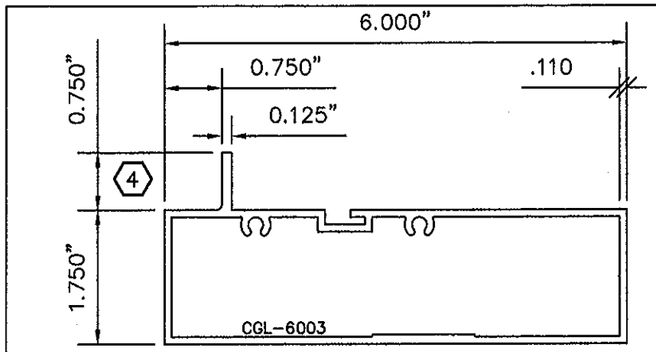

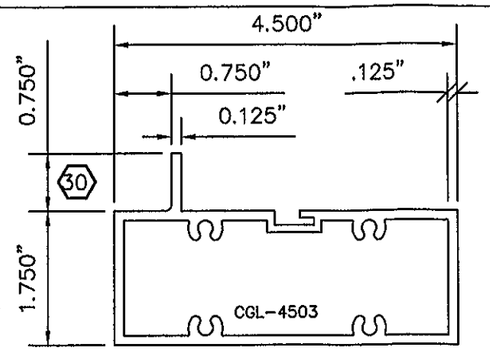

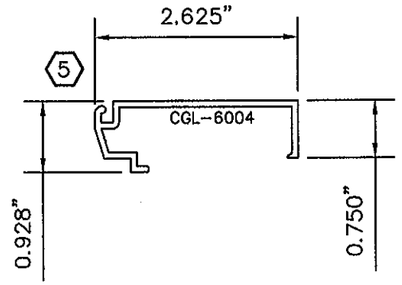

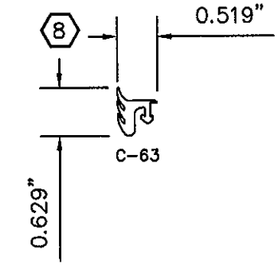

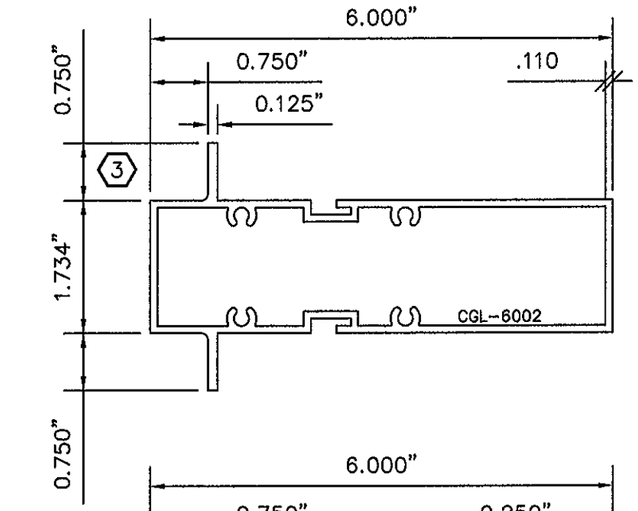

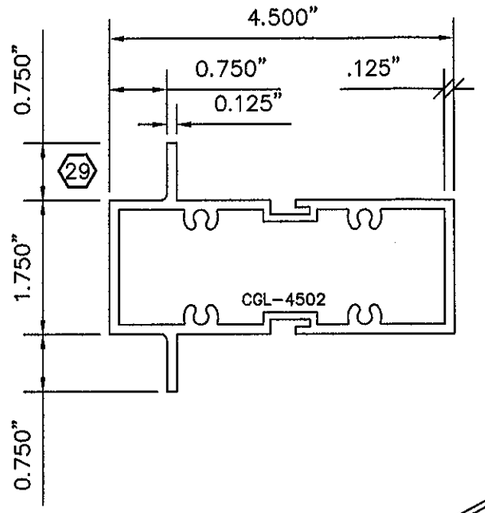

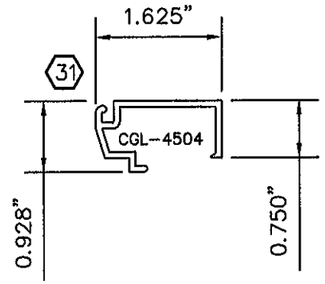

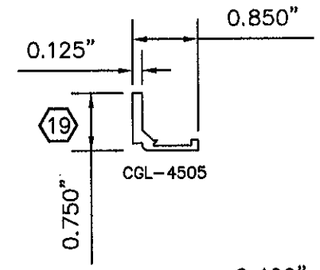

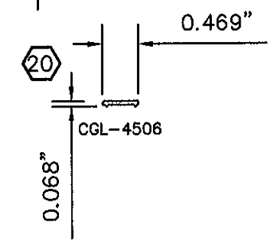

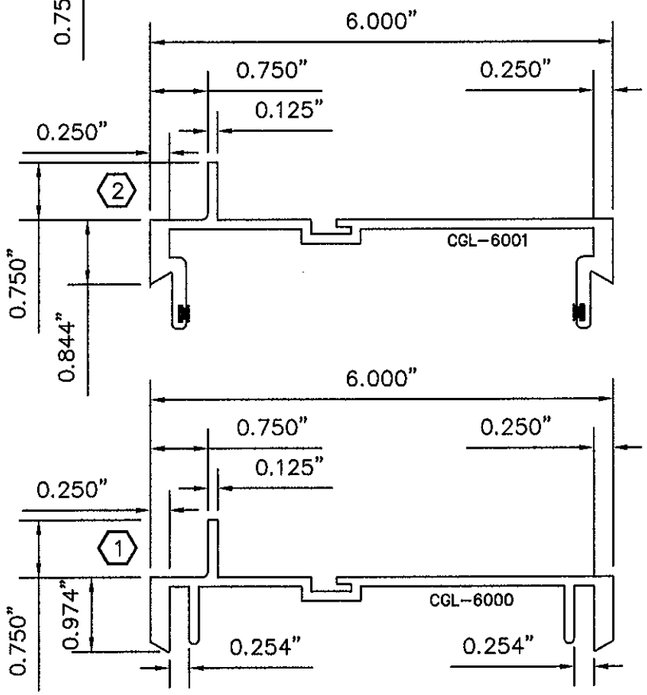

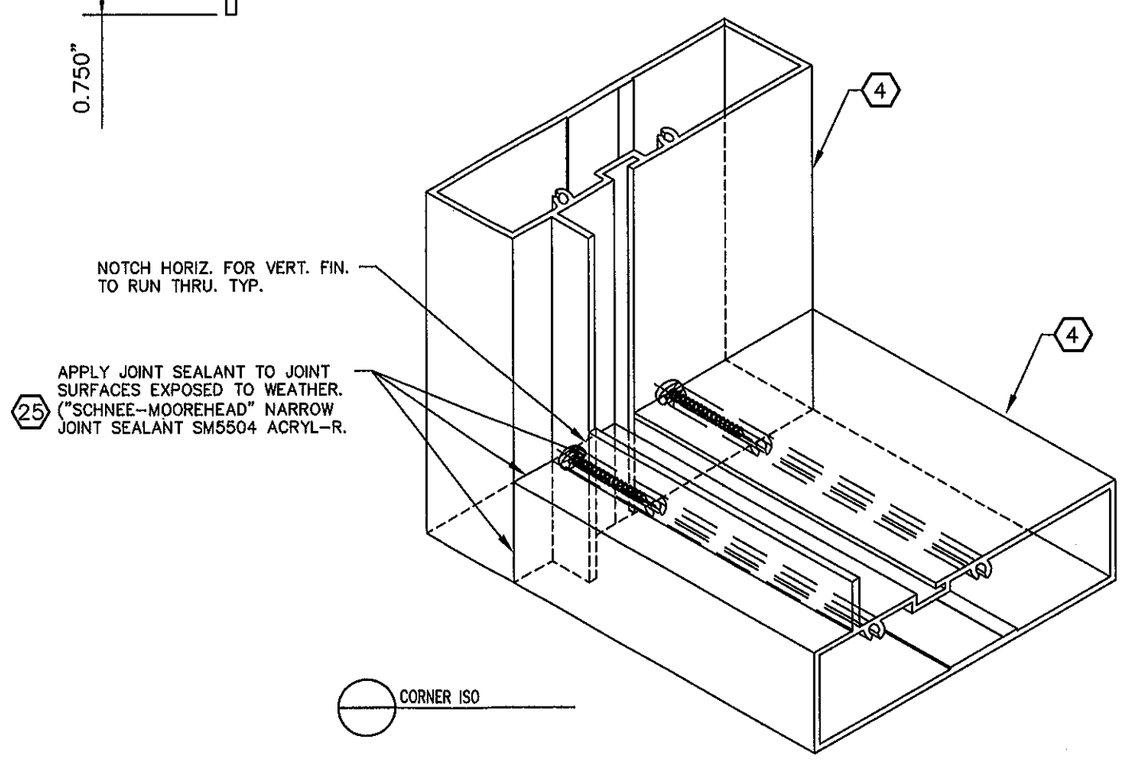

FOR METRO-DADE OFFICE USE ONLY.

PRODUCT REVISED
as complying with the Florida
Building Code
Acceptance No 11-1103.06
Expiration Date 3/30/2016
By
Miami Dade Product Control

ENGINEER:
SCOTT WOLTERS
FL PE# 62354
WOLTERS ENGINEERING
(COA# 27194)
1271 GRANT STREET
HOLLYWOOD, FL 33019
SEAL:
NOV 01 2011

REVISIONS:
4 11/18/10
3 7/16/10
2 3/9/06

SCALE: N.T.S.
DRAWN BY: SW
DATE: 10/3/05

CCC
Custom Glass Company
Commercial Contractors
est. 1974

DRAWING TITLE: CGC-6000 SMALL MISSILE IMPACT RESISTANT SYSTEM
DWG. # 6000-SMI
PAGE TITLE:
PAGE NO. 11/11

750 Southwest 14th Avenue Pompano Beach, Florida 33069 ph.(954) 781-6565 fax (954) 781-6523