MIAMI-DADE COUNTY
DEPARTMENT OF PERMITTING, ENVIRONMENT, AND REGULATORY AFFAIRS (PERA)
BOARD AND CODE ADMINISTRATION DIVISION

MIAMI–DADE COUNTY, FLORIDA
PRODUCT CONTROL SECTION
11805 SW 26 Street, Room 208
Miami, Florida 33175–2474
T (786) 315–2590 F (786) 315–2599
www.miamidade.gov/pera/

# NOTICE OF ACCEPTANCE (NOA)

**PGT Industries**
**1070 Technology Drive**
**Nokomis, Fl 34275**

**SCOPE:**

This NOA is being issued under the applicable rules and regulations governing the use of construction materials. The documentation submitted has been reviewed and accepted by Miami–Dade County PERA–Product Control Section to be used in Miami–Dade County and other areas where allowed by the Authority Having Jurisdiction (AHJ).

This NOA shall not be valid after the expiration date stated below. The Miami–Dade County Product Control Section (In Miami–Dade County) and/or the AHJ (in areas other than Miami–Dade County) reserve the right to have this product or material tested for quality assurance purposes. If this product or material fails to perform in the accepted manner, the manufacturer will incur the expense of such testing and the AHJ may immediately revoke, modify, or suspend the use of such product or material within their jurisdiction. PERA reserves the right to revoke this acceptance, if it is determined by Miami–Dade County Product Control Section that this product or material fails to meet the requirements of the applicable building code.

This product is approved as described herein, and has been designed to comply with the Florida Building Code, including the High Velocity Hurricane Zone.

**DESCRIPTION: Series "SDG–2500" Aluminum Sliding Glass Window w/ wo Reinforcements – N.I.**

**APPROVAL DOCUMENT:** Drawing No. **757–1**, titled "Alum. Sliding Glass Windows–Non–Impact", sheets 1 through 18 of 18, prepared by manufacturer, dated 03/01/07 with revision "**K**" dated 10/14/11, signed and sealed by Anthony Lynn Miller, P. E., bearing the Miami–Dade County Product Control Revision stamp with the Notice of Acceptance number and Expiration date by the Miami–Dade County Product Control Section.

**MISSILE IMPACT RATING: None.**

**LIMITATIONS:**
1. Use of Table 1, requires No reinforcements.
2. Use of Table 2 and 3 require full reinforcement per sheets 8 & 9 of the drawing.

**LABELING:** Each unit shall bear a permanent label with the manufacturer's name or logo, city, state, model/ series and following statement: "Miami–Dade County Product Control Approved" unless otherwise noted herein.

**RENEWAL** of this NOA shall be considered after a renewal application has been filed and there has been no change in the applicable building code negatively affecting the performance of this product.

**TERMINATION** of this NOA will occur after the expiration date or if there has been a revision or change in the materials, use, and/or manufacture of the product or process. Misuse of this NOA as an endorsement of any product, for sales, advertising or any other purposes shall automatically terminate this NOA. Failure to comply with any section of this NOA shall be cause for termination and removal of NOA.

**ADVERTISEMENT:** The NOA number preceded by the words Miami–Dade County, Florida, and followed by the expiration date may be displayed in advertising literature. If any portion of the NOA is displayed, then it shall be done in its entirety.

**INSPECTION:** A copy of this entire NOA shall be provided to the user by the manufacturer or its distributors and shall be available for inspection at the job site at the request of the Building Official.

This NOA **revises NOA No. 08–0213.04** and consists of this page 1, evidence pages E–1, E–2 and E–3, as well as approval document mentioned above.

The submitted documentation was reviewed by **Jaime D. Gascon, P. E.**

MIAMI-DADE COUNTY APPROVED

J. Gascon 1/25/12

## NOTICE OF ACCEPTANCE: EVIDENCE SUBMITTED

**A. DRAWINGS**

**1.** Manufacturer's die drawings and sections.
***(Submitted under previous NOA's No.'s 07–0403.01, 04–1220.05, 02–0701.03 and 96–1023.03)***

**2.** Drawing No. **757–1**, titled "Alum. Sliding Glass Windows–Non–Impact", sheets 1 through 18 of 18, prepared by manufacturer, dated 03/01/07 with revision "**K**" dated 10/14/11, signed and sealed by Anthony Lynn Miller, P. E.

**B. TESTS**

**1.** Test reports on: 1) Air Infiltration Test, per FBC, TAS 202–94
2) Uniform Static Air Pressure Test, Loading per FBC, TAS 202–94
3) Water Resistance Test, per FBC, TAS 202–94
4) Forced Entry Test, per FBC 2411.3.2.1 (b) and, TAS 202–94

along with marked–up drawings and installation diagram of aluminum sliding glass window, prepared by Fenestration Testing Laboratory, Inc., Test Report No. **FTL–5095**, dated 12/13/06, all signed and sealed by Edmundo Largaespada, P. E.
***(Submitted under previous NOA No. 07–0403.01)***

**2.** Test reports on: 1) Air Infiltration Test, per FBC, TAS 202–94
2) Uniform Static Air Pressure Test, Loading per FBC, TAS 202–94
3) Water Resistance Test, per FBC, TAS 202–94
4) Forced Entry Test, per FBC 2411.3.2.1 (b) and, TAS 202–94

along with marked–up drawings and installation diagram of aluminum sliding glass window, prepared by Fenestration Testing Laboratory, Inc., Test Reports No.'s **FTL–3117**, **FTL–3102**, **FTL–3596**, **FTL–4341**, **FTL–4273**, **FTL–4275**, **FTL–4277**, **FTL–4278**, **FTL–4280** and **FTL–4285**, dated 07/23, 22 and 26, 09/19 and 28/04, all signed and sealed by Edmundo Largaespada, P. E.
***(Submitted under previous NOA No. 04–1220.05)***

**3.** Test reports on: 1) Air Infiltration Test, per SBC, PA 202–94
2) Uniform Static Air Pressure Test, Loading per SBC, PA 202–94
3) Water Resistance Test, per SBC, PA 202–94
4) Forced Entry Test, per SBC, PA 202–94

along with marked–up drawings and installation diagram of aluminum sliding glass window, prepared by Fenestration Testing Laboratory, Inc., Test Reports No.'s **FTL–3102** and **FTL–3116**, dated 06/18 and 19/01, all signed and sealed by Luis Figueredo, P. E.
***(Submitted under previous NOA No. 02–0701.03)***

**Jaime D. Gascon, P. E.**
**Product Control Section Supervisor**
**NOA No. 11–1110.16**
**Expiration Date: May 22, 2013**
**Approval Date: February 02, 2012**

## NOTICE OF ACCEPTANCE: EVIDENCE SUBMITTED

**B. TESTS (CONTINUED)**

**4.** Test reports on: 1) Air Infiltration Test, per SBC, PA 202–94
2) Uniform Static Air Pressure Test, Loading per SBC, PA 202–94
3) Water Resistance Test, per SBC, PA 202–94
4) Forced Entry Test, per SBC, PA 202–94

along with marked–up drawings and installation diagram of aluminum sliding glass window, prepared by Fenestration Testing Laboratory, Inc., Test Report No. **FTL–1381**, dated 09/16/96, signed and sealed by Gilbert diamond, P. E.
***(Submitted under previous NOA No. 96–1023.03)***

**C. CALCULATIONS**

**1.** Anchor verification calculations and structural analysis, dated 10/30/07 complying with FBC–2007, prepared by manufacture, signed and sealed by Robert L. Clark, P. E.
***(Submitted under previous NOA No. 07–0403.01)***

**2. Glazing complies with ASTM E1300–02/ 04**

**D. QUALITY ASSURANCE**

**1.** Miami–Dade Department of Permitting, Environment, and Regulatory Affairs (PERA)

**E. MATERIAL CERTIFICATIONS**

**1.** None.

**F. STATEMENTS**

**1.** Statement letter of conformance and compliance with the FBC–2007 (with the 2009 supplement) and FBC–2010, dated 10/29/11, signed and sealed by Anthony Lynn Miller, P. E.

**2.** Statement letter of no financial interest and independence, dated 10/29/11, signed and sealed by Anthony Lynn Miller, P. E.

**3.** Letter of *Adoption of as his Own, the Work of another Engineer* per Section 61G15–27.001 of the F.B.P.E., dated 10/07/11 signed and sealed by Anthony Lynn Miller, P. E.

**4.** Statement letter of no financial interest, independence, conformance and compliance with the Florida Building Code, dated 03/28/07 and 02/11/08, both signed and sealed by Anthony Robert L. Clark, P. E.
***(Submitted under previous NOA No. 08–0213.04)***

**5.** Proposals No.'s **07–2254** and **04–0404** issued by Product Control, dated 06/01/07 and 09/14/04, both signed by Ishaq Chanda, P. E.
***(Submitted under previous NOA No. 07–0403.01)***

**Jaime D. Gascon, P. E.**
**Product Control Section Supervisor**
**NOA No. 11–1110.16**
**Expiration Date: May 22, 2013**
**Approval Date: February 02, 2012**

## NOTICE OF ACCEPTANCE: EVIDENCE SUBMITTED

**F. STATEMENTS (CONTINUED)**

6. Laboratory compliance letter for Test Report No. **FTL–5095**, issued by Fenestration Testing Laboratory, Inc., dated 12/13/06, signed and sealed by Edmundo Largaespada, P. E.
   ***(Submitted under previous NOA No. 07–0403.01)***
7. Laboratory compliance letter for Test Reports No.'s **FTL–3117, FTL–3102, FTL–3596, FTL–4341, FTL–4273, FTL–4275, FTL–4277, FTL–4278, FTL–4280** and **FTL–4285**, issued by Fenestration Testing Laboratory, Inc., dated 09/28/04, all signed and sealed by Edmundo Largaespada, P. E.
   ***(Submitted under previous NOA No. 04–1220.05)***
8. Laboratory compliance letter for Test Reports No.'s **FTL–3102** and **FTL–3116**, issued by Fenestration Testing Laboratory, Inc., dated 06/19/01, all signed and sealed by Luis Figueredo, P. E.
   ***(Submitted under previous NOA No. 02–0701.03)***
9. Laboratory compliance letter for Test Report No. **FTL–1381**, issued by Fenestration Testing Laboratory, Inc., dated 09/16/96, signed and sealed by Gilbert diamond, P. E.
   ***(Submitted under previous NOA No. 96–0701.03)***

**G. OTHERS**

1. Notice of Acceptance No. **08–0213.04**, issued to PGT Industries for their Series "SGD–2500 Aluminum Sliding Glass Windows w / wo Reinforcements – N.I." approved on 04/24/08 and expiring on 05/22/13.

**Jaime D. Gascon, P. E.**
**Product Control Section Supervisor**
**NOA No. 11–1110.16**
**Expiration Date: May 22, 2013**
**Approval Date: February 02, 2012**

# GENERAL NOTES: NON–IMPACT SLIDING GLASS WINDOW

1. GLAZING OPTIONS:
   A. 3/16" ANNEALED GLASS. 60" HIGH COUNTER TOP APPLICATION ONLY, TEST REPORT FTL-4278.
   B. 3/16" TEMPERED GLASS. TEST REPORTS FTL-3116, FTL3117, FTL-4277 AND FTL-5095.
   C. 1/4" TEMPERED GLASS. TEST REPORT FTL-3102.
   D. 5/8" INSULATED GLASS (I.G.); (2) LITES OF 3/16" TEMPERED GLASS WITH A 1/4" AIR SPACE. TEST REPORTS FTL-4273, FTL-4275, FTL-4280, FTL-4285 AND FTL-4341.
2. CONFIGURATIONS: SEE SHEET 4.
3. DESIGN PRESSURES: SEE TABLES 1-3 ON SHEETS 2 AND 3.
   A. NEGATIVE DESIGN LOADS BASED ON TESTED PRESSURE AND GLASS TABLES ASTM E 1300-02.
   B. POSITIVE DESIGN LOADS BASED ON WATER TEST PRESSURE AND GLASS TABLES ASTM E 1300-02.
4. ANCHORAGE: THE 33 1/3% STRESS INCREASE HAS NOT BEEN USED IN THE DESIGN OF THIS PRODUCT. MATERIALS, INCLUDING BUT NOT LIMITED TO STEEL SCREWS, THAT COME INTO CONTACT WITH OTHER DISSIMILAR MATERIALS SHALL MEET THE REQUIREMENTS OF THE FBC. FOR ANCHORAGE DETAILS, SEE SHEETS 15 AND 18.
5. MIAMI-DADE COUNTY APPROVED SHUTTERS ARE REQUIRED IN MIAMI-DADE COUNTY AND WHERE IMPACT RESISTANCE IS REQUIRED.
6. INSTALLATION SCREWS, FRAME AND PANEL CORNERS SEALED WITH SCHNEE/MOREHEAD SEAM SEALER.
7. REFERENCES: TEST REPORTS FTL-3102, FTL-3116, FTL-3117, FTL-3596, FTL-4273, FTL-4275, FTL-4277, FTL-4278, FTL-4280, FTL-4285, FTL-4341 AND 5095.
   >ELCO TEXTRON NOA: 04-0721.01, 03-0225.05
   >ANSI/AF&PA NDS-2005 FOR WOOD CONSTRUCTION
   >ADM-2005 ALUMINUM DESIGN MANUAL
8. THIS PRODUCT HAS BEEN DESIGNED & TESTED TO COMPLY WITH THE REQUIREMENTS OF THE FLORIDA BUILDING CODE, INCLUDING THE HIGH VELOCITY HURRICANE ZONE (HVHZ).

## NOA DRAWING MAP


| | SHEET |
|---|---|
| GENERAL NOTES | 1 |
| GLAZING DETAILS | 1 |
| DESIGN PRESSURES | 2-3 |
| CONFIGURATIONS | 4 |
| ELEVATIONS | 5 |
| VERT. SECTIONS | 6 |
| HORIZ. SECTIONS | 7-9 |
| "X" & "O" CLIP INSTALL | 10 |
| PARTS LIST | 11 |
| EXTRUSIONS | 12-14 |
| ANCHORAGE | 15-18 |


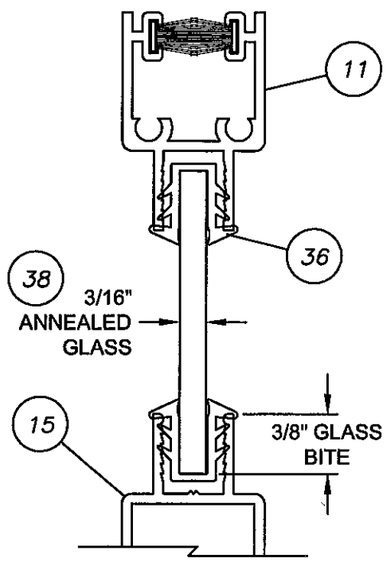


3/16" MONOLITHIC GLASS
GLASS TYPE A

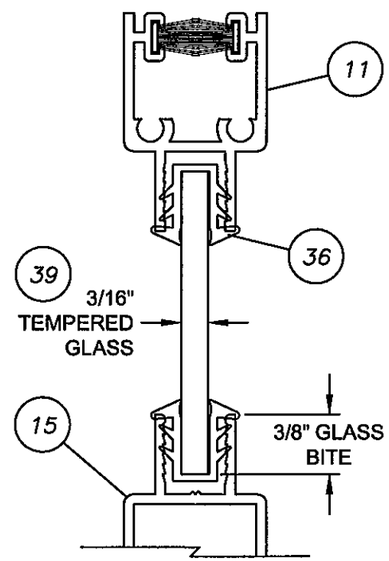


3/16" MONOLITHIC GLASS
GLASS TYPE B

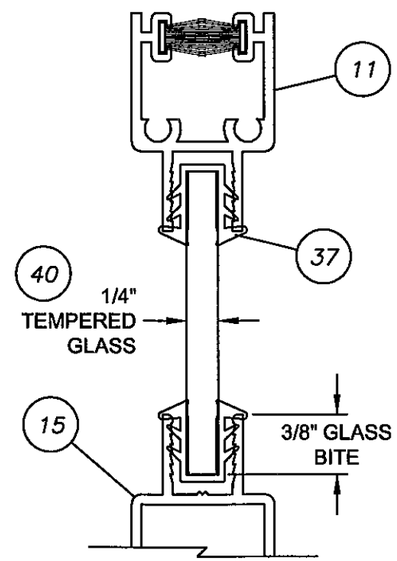


1/4" MONOLITHIC GLASS
GLASS TYPE C

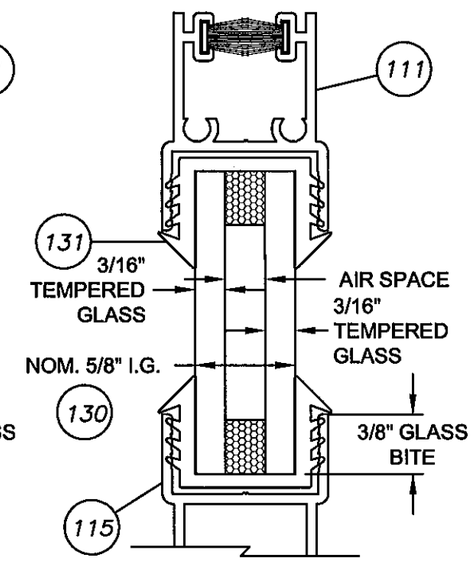


5/8" I.G. GLASS
GLASS TYPE D

PRODUCT REVISED
as complying with the Florida
Building Code
Acceptance No 11-1119.16
Expiration Date 05/22/2013
By
Miami Dade Product Control

ANTHONY LYNN MILLER
LICENSE
No. 58705
10/29/11
STATE OF
FLORIDA
PROFESSIONAL ENGINEER
A. LYNN MILLER, P.E.
P.E.# 58705

| Revsd By: | Date: | Revisions: | |
|---|---|---|---|
| F.K. | 9/27/07 | I | ADD GLAZING DETAIL A, AND GLASS TYPES TO DETAILS |
| F.K. | 10/22/07 | J | NO CHANGES THIS SHEET |
| J.J. | 10/14/11 | K | FBC 2010 CODE CHANGE |
| Drawn By: F.K. | Date: 09/08/04 | Checked By: J.J. | Date: 04/02/06 |

1070 TECHNOLOGY DRIVE
NOKOMIS, FL 34275

P.O. BOX 1529
NOKOMIS, FL 34274

PGT
Visibly Better

Description: NOTES, GLAZING DETAILS & MAP

Title: ALUM. SLIDING GLASS WINDOW, NON-IMPACT

| Series/Model: | Scale: | Sheet: | Drawing No. | Rev: |
|---|---|---|---|---|
| SGD2500 | NTS | 1 of 18 | 757-1 | K |

**COMPARATIVE ANALYSIS:** A. FTL-4278; 3/16" ANNEALED (60" HIGH MAX.) **TABLE 1.**

**>EXTENDED SILL, 2 1/2" HIGH** △J B. FTL-4277; 3/16" OR 1/4" TEMPERED

**>SINGLE/SINGLE INTERLOCK** △J D. FTL-4280; 5/8" TEMPERED I.G. (3/16"T, 1/4"SPACE, 3/16"T)

**>NO REINFORCEMENT (SEE SECTIONS SHEET 7)**

| NOM. PANEL WIDTH | GLASS | OVER-ALL UNIT HEIGHT | | | | | | | | | | | | | |
|---|---|---|---|---|---|---|---|---|---|---|---|---|---|---|---|
| | | 36" ($3^0$) | | 42" ($3^6$) | | 48" ($4^0$) | | 54" ($4^6$) | | 60" ($5^0$) | | 72" ($6^0$) | | 80" ($6^8$) | |
| 24" ($2^0$) | A | +65.0 | -123.0 | +65.0 | -94.7 | +65.0 | -86.2 | +65.0 | -80.9 | +65.0 | -76.2 | | | | |
| | B | +65.0 | -130.0 | +65.0 | -130.0 | +65.0 | -130.0 | +65.0 | -130.0 | +65.0 | -130.0 | +65.0 | -112.0 | +65.0 | -98.8 |
| | D | +65.0 | -130.0 | +65.0 | -130.0 | +65.0 | -130.0 | +65.0 | -130.0 | +65.0 | -130.0 | +65.0 | -121.3 | +65.0 | -107.1 |
| 30" ($2^6$) | A | +65.0 | -93.5 | +65.0 | -84.1 | +65.0 | -73.6 | +62.5 | -62.5 | +55.6 | -55.6 | | | | |
| | B | +65.0 | -130.0 | +65.0 | -130.0 | +65.0 | -130.0 | +65.0 | -130.0 | +65.0 | -119.5 | +65.0 | -94.3 | +65.0 | -82.7 |
| | D | +65.0 | -130.0 | +65.0 | -130.0 | +65.0 | -130.0 | +65.0 | -130.0 | +65.0 | -129.4 | +65.0 | -102.2 | +65.0 | -89.6 |
| 36" ($3^0$) | A | +65.0 | -86.8 | +65.0 | -77.4 | +65.0 | -67.4 | +58.7 | -58.7 | +51.1 | -51.1 | | | | |
| | B | +65.0 | -106.7 | +65.0 | -106.7 | +65.0 | -106.7 | +65.0 | -106.7 | +65.0 | -106.7 | +65.0 | -83.0 | +65.0 | -72.3 |
| | D | +65.0 | -115.6 | +65.0 | -115.6 | +65.0 | -115.6 | +65.0 | -115.6 | +65.0 | -115.6 | +65.0 | -89.9 | +65.0 | -78.3 |
| 42" ($3^6$) | A | +65.0 | -77.0 | +65.0 | -70.3 | +61.5 | -61.5 | +55.4 | -55.4 | +49.4 | -49.4 | | | | |
| | B | +65.0 | -80.0 | +65.0 | -78.4 | +65.0 | -78.4 | +65.0 | -78.4 | +65.0 | -78.4 | +65.0 | -75.3 | +65.0 | -65.1 |
| | D | +65.0 | -86.7 | +65.0 | -84.9 | +65.0 | -84.9 | +65.0 | -84.9 | +65.0 | -84.9 | +65.0 | -81.6 | +65.0 | -70.5 |
| 48" ($4^0$) | A | +65.0 | -67.0 | +61.7 | -61.7 | +56.7 | -56.7 | +50.8 | -50.8 | +46.7 | -46.7 | | | | |
| | B | +64.0 | -64.0 | +61.0 | -61.0 | +60.0 | -60.0 | +60.0 | -60.0 | +60.0 | -60.0 | +60.0 | -60.0 | +60.0 | -60.0 |
| | D | +65.0 | -69.3 | +65.0 | -66.0 | +65.0 | -65.0 | +65.0 | -65.0 | +65.0 | -65.0 | +65.0 | -65.0 | +65.0 | -65.0 |

INTERIOR

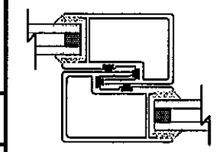

EXTERIOR

SINGLE/SINGLE INTERLOCK NO REINFORCEMENT

△J

| SEE NOTES 1 & 2 | |
|---|---|
| SILL HEIGHT (IN.) | POS. DESIGN PRESS. (PSF) |
| 2 1/2" | +65.0 |
| 1 3/4" | +35.3 |
| INTERIOR SILL | NOT RATED |

NOTES:

1. POSITIVE DESIGN PRESSURES SHOWN IN TABLES ARE BASED ON THE 2 1/2" HIGH SILL. POSITIVE DESIGN PRESSURE IS LIMITED TO 35.3 PSF WITH THE 1 3/4" SILL. NEGATIVE PRESSURES ARE UNCHANGED.
2. INTERIOR SILL IS USED WHERE WATER RESISTANCE IS NOT REQUIRED, IN WHICH CASE POSITIVE DESIGN PRESSURE EQUALS THE NEGATIVE DESIGN PRESSURE SHOWN IN THIS TABLE FOR THE RESPECTIVE SIZE.
3. OPERABLE WINDOWS MUST MEET MINIMUM EGRESS/EXCAPE REQUIREMENTS PER THE FBC.

PRODUCT REVISED
as complying with the Florida
Building Code
Acceptance No 11-1110.16
Expiration Date 06/27/2013
By
Miami Dade Product Control

ANTHONY LYNN MILLER
LICENSE
No. 58705
10/24/11
STATE OF FLORIDA
PROFESSIONAL ENGINEER
A. LYNN MILLER, P.E.
P.E.# 58705

| Revsd By: | Date: | Revisions: | |
|---|---|---|---|
| F.K. | 9/27/07 | I | CLARIFY NOTE 1 REGARDING POSITIVE PRESSURE LIMITATION<br>REVISE REINF. REF IN EACH TABLE & ADD INTERLOCK SECTION. |
| Revsd By: F.K. | Date: 10/22/07 | Revisions: J | ADD SILL HT. VS +DP TABLE<br>REMOVE TEST REPORTS REFERENCES TO FTL-3117 & FTL-4285 |
| Revsd By: J.J. | Date: 10/14/11 | Revisions: K | NO CHANGE THIS SHEET |
| Drawn By: F.K. | Date: 09/08/04 | Checked By: J.J. | Date: 04/02/06 |

1070 TECHNOLOGY DRIVE
NOKOMIS, FL 34275

P.O. BOX 1529
NOKOMIS, FL 34274

PGT Visibly Better

Description: DESIGN PRESSURES, NO REINFORCEMENT

Title: ALUM. SLIDING GLASS WINDOW, NON-IMPACT

| Series/Model: | Scale: | Sheet: | Drawing No. | Rev: |
|---|---|---|---|---|
| SGD2500 | NTS | 2 of 18 | 757-1 | K |

**COMPARATIVE ANALYSIS:** GLASS TYPE: **TABLE 2.**

**>EXTENDED SILL, 2 1/2" HIGH** B. FTL-3116; 3/16" OR 1/4" TEMPERED

**>SINGLE/SINGLE INTERLOCK** D. FTL-4341; 5/8" TEMPERED I.G. (3/16"T,1/4"SPACE,3/16"T)

**>FULL REINFORCEMENT (SEE SECTIONS SHEET 8)**

| NOM. PANEL WIDTH | GLASS | OVER-ALL UNIT HEIGHT | | | | | | | | | | | | | |
|---|---|---|---|---|---|---|---|---|---|---|---|---|---|---|---|
| | | 36" ($3^0$) | | 42" ($3^6$) | | 48" ($4^0$) | | 54" ($4^6$) | | 60" ($5^0$) | | 72" ($6^0$) | | 80" ($6^8$) | |
| 24" ($2^0$) | B | +65.0 | -130.0 | +65.0 | -130.0 | +65.0 | -130.0 | +65.0 | -130.0 | +65.0 | -130.0 | +65.0 | -120.0 | +65.0 | -105.9 |
| | D | +65.0 | -130.0 | +65.0 | -130.0 | +65.0 | -130.0 | +65.0 | -130.0 | +65.0 | -130.0 | +65.0 | -120.0 | +65.0 | -105.9 |
| 30" ($2^6$) | B | +65.0 | -128.0 | +65.0 | -128.0 | +65.0 | -128.0 | +65.0 | -128.0 | +65.0 | -128.0 | +65.0 | -101.1 | +65.0 | -88.6 |
| | D | +65.0 | -128.0 | +65.0 | -128.0 | +65.0 | -128.0 | +65.0 | -128.0 | +65.0 | -128.0 | +65.0 | -101.1 | +65.0 | -88.6 |
| 36" ($3^0$) | B | +65.0 | -88.9 | +65.0 | -88.9 | +65.0 | -88.9 | +65.0 | -88.9 | +65.0 | -88.9 | +65.0 | -88.9 | +65.0 | -77.4 |
| | D | +65.0 | -88.9 | +65.0 | -88.9 | +65.0 | -88.9 | +65.0 | -88.9 | +65.0 | -88.9 | +65.0 | -88.9 | +65.0 | -77.4 |
| 42" ($3^6$) | B | +65.0 | -66.7 | +65.0 | -65.3 | +65.0 | -65.3 | +65.0 | -65.3 | +65.0 | -65.3 | +65.0 | -65.3 | +65.0 | -65.3 |
| | D | +65.0 | -66.7 | +65.0 | -65.3 | +65.0 | -65.3 | +65.0 | -65.3 | +65.0 | -65.3 | +65.0 | -65.3 | +65.0 | -65.3 |
| 48" ($4^0$) | B | +53.3 | -53.3 | +50.8 | -50.8 | +50.0 | -50.0 | +50.0 | -50.0 | +50.0 | -50.0 | +50.0 | -50.0 | +50.0 | -50.0 |
| | D | +53.3 | -53.3 | +50.8 | -50.8 | +50.0 | -50.0 | +50.0 | -50.0 | +50.0 | -50.0 | +50.0 | -50.0 | +50.0 | -50.0 |

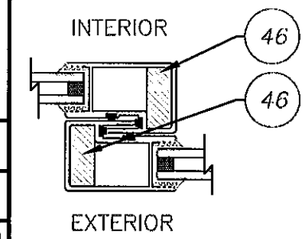


SINGLE/SINGLE INTERLOCK REINFORCED

| SEE NOTES 1 & 2 | |
|---|---|
| SILL HEIGHT (IN.) | POS. DESIGN PRESS. (PSF) |
| 2 1/2" | +65.0 |
| 1 3/4" | +35.3 |
| INTERIOR SILL | NOT RATED |

**COMPARATIVE ANALYSIS:** GLASS TYPE: **TABLE 3.**

**>EXTENDED SILL, 2 1/2" HIGH** C. FTL-3102; 1/4" TEMPERED

**>SINGLE/DOUBLE INTERLOCK (OUTSIDE)** D. FTL-4273 & FTL-4275; 5/8" TEMPERED I.G. (3/16"T, 1/4"SPACE, 3/16"T)

**>FULL REINFORCEMENT (SEE SECTIONS SHEET 9)**

| NOM. PANEL WIDTH | GLASS | OVER-ALL UNIT HEIGHT | | | | | | | | | | | | | |
|---|---|---|---|---|---|---|---|---|---|---|---|---|---|---|---|
| | | 36" ($3^0$) | | 42" ($3^6$) | | 48" ($4^0$) | | 54" ($4^6$) | | 60" ($5^0$) | | 72" ($6^0$) | | 80" ($6^8$) | |
| 24" ($2^0$) | C | +65.0 | -130.0 | +65.0 | -130.0 | +65.0 | -130.0 | +65.0 | -130.0 | +65.0 | -130.0 | +65.0 | -130.0 | +65.0 | -127.1 |
| | D | +65.0 | -130.0 | +65.0 | -130.0 | +65.0 | -130.0 | +65.0 | -130.0 | +65.0 | -130.0 | +65.0 | -130.0 | +65.0 | -130.0 |
| 30" ($2^6$) | C | +65.0 | -130.0 | +65.0 | -130.0 | +65.0 | -130.0 | +65.0 | -130.0 | +65.0 | -130.0 | +65.0 | -121.3 | +65.0 | -106.3 |
| | D | +65.0 | -130.0 | +65.0 | -130.0 | +65.0 | -130.0 | +65.0 | -130.0 | +65.0 | -130.0 | +65.0 | -130.0 | +65.0 | -115.2 |
| 36" ($3^0$) | C | +65.0 | -106.7 | +65.0 | -106.7 | +65.0 | -106.7 | +65.0 | -106.7 | +65.0 | -106.7 | +65.0 | -106.7 | +65.0 | -92.9 |
| | D | +65.0 | -115.6 | +65.0 | -115.6 | +65.0 | -115.6 | +65.0 | -115.6 | +65.0 | -115.6 | +65.0 | -115.6 | +65.0 | -100.6 |
| 42" ($3^6$) | C | +65.0 | -80.0 | +65.0 | -78.4 | +65.0 | -78.4 | +65.0 | -78.4 | +65.0 | -78.4 | +65.0 | -78.4 | +65.0 | -78.4 |
| | D | +65.0 | -86.7 | +65.0 | -84.9 | +65.0 | -84.9 | +65.0 | -84.9 | +65.0 | -84.9 | +65.0 | -84.9 | +65.0 | -84.9 |
| 48" ($4^0$) | C | +64.0 | -64.0 | +61.0 | -61.0 | +60.0 | -60.0 | +60.0 | -60.0 | +60.0 | -60.0 | +60.0 | -60.0 | +60.0 | -60.0 |
| | D | +65.0 | -69.3 | +65.0 | -66.0 | +65.0 | -65.0 | +65.0 | -65.0 | +65.0 | -65.0 | +65.0 | -65.0 | +65.0 | -65.0 |

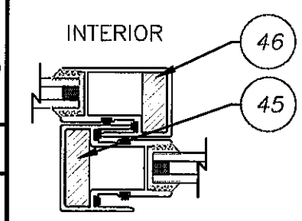


SINGLE/DOUBLE INTERLOCK REINFORCED

NOTES:
1. POSITIVE DESIGN PRESSURES SHOWN IN TABLES ARE BASED ON THE 2 1/2" HIGH SILL. POSITIVE DESIGN PRESSURE IS LIMITED TO 35.3 PSF WITH THE 1 3/4" SILL. NEGATIVE PRESSURES ARE UNCHANGED.
2. INTERIOR SILL IS USED WHERE WATER RESISTANCE IS NOT REQUIRED, IN WHICH CASE POSITIVE DESIGN PRESSURE EQUALS THE NEGATIVE DESIGN PRESSURE SHOWN IN THIS TABLE FOR THE RESPECTIVE SIZE.
3. OPERABLE WINDOWS MUST MEET THE MINUMUM EGRESS/ESCAPE REQUIREMENTS PER THE FBC.

PRODUCT REVISED
as complying with the Florida Building Code
Acceptance No 11-1110.16
Expiration Date 09/22/2013
By
Miami Dade Product Control

ANTHONY LYNN MILLER
LICENSE
No. 58705
10/29/11
STATE OF FLORIDA
PROFESSIONAL ENGINEER
A. LYNN MILLER, P.E.
P.E.# 58705

| Revsd By: | Date: | Revisions: | |
|---|---|---|---|
| F.K. | 9/27/07 | I | CLARIFY NOTE 1 REGARDING POSITIVE PRESSURE LIMITATION REVISE REINF. REF IN EACH TABLE & ADD INTERLOCK SECTION. |
| F.K. | 10/22/07 | J | ADD SILL HT. VS +DP TABLE |
| J.J. | 10/14/11 | K | NO CHANGE THIS SHEET |
| Drawn By: F.K. | Date: 09/08/04 | Checked By: J.J. | Date: 04/02/06 |

1070 TECHNOLOGY DRIVE
NOKOMIS, FL 34275

P.O. BOX 1529
NOKOMIS, FL 34274

PGT Visibly Better

Description: DESIGN PRESSURES, REINFORCED

Title: ALUM. SLIDING GLASS WINDOW, NON-IMPACT

| Series/Model: | Scale: | Sheet: | Drawing No. | Rev: |
|---|---|---|---|---|
| SGD2500 | NTS | 3 of 18 | 757-1 | K |

| CODE | PANEL TYPES | | |
|---|---|---|---|
| A | R.H. INTERLOCK | 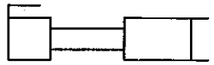 | LOCKSTILE |
| B | R.H. INTERLOCK | 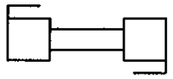 | R.H. INTERLOCK |
| C | R.H. INTERLOCK | 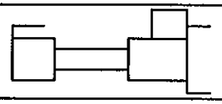 | REVERSE ASTRAGAL |
| D | LOCKSTILE | 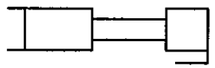 | INTERLOCK R.H. |
| E | L.H. INTERLOCK | 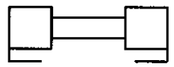 | R.H. INTERLOCK |
| F | L.H. INTERLOCK | 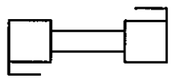 | L.H. INTERLOCK |
| G | LOCKSTILE | 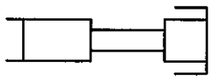 | DOUBLE INTERLOCK |
| H | R.H. INTERLOCK | 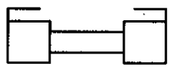 | L.H. INTERLOCK |
| I | DOUBLE INTERLOCK | 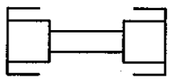 | DOUBLE INTERLOCK |
| J | LOCKSTILE | 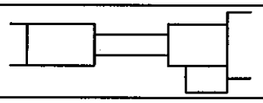 | STANDARD ASTRAGAL |
| K | L.H. INTERLOCK | 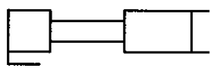 | LOCKSTILE |
| L | L.H. INTERLOCK | 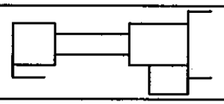 | STANDARD ASTRAGAL |
| M | LOCKSTILE | 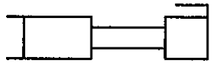 | L.H. INTERLOCK |
| N | STANDARD ASTRAGAL | | L.H. INTERLOCK |
| P | R.H. INTERLOCK | 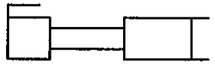 | FIXED LOCKSTILE |

| CODE | PANEL TYPES | | |
|---|---|---|---|
| R | FIXED LOCKSTILE | 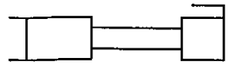 | L.H. INTERLOCK |
| S | FIXED LOCKSTILE | 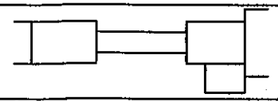 | STANDARD ASTRAGAL |
| T | REVERSE ASTRAGAL | 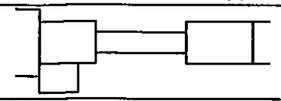 | FIXED LOCKSTILE |
| U | REVERSE ASTRAGAL | 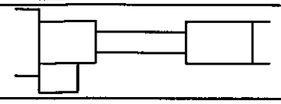 | LOCKSTILE |
| V | FIXED LOCKSTILE | 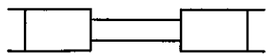 | FIXED LOCKSTILE |
| W | DOUBLE INTERLOCK | 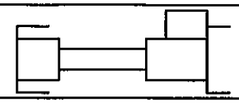 | STANDARD ASTRAGAL |
| Y | FIXED LOCKSTILE | 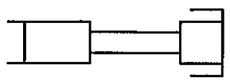 | DOUBLE INTERLOCK |
| Z | LOCKSTILE | 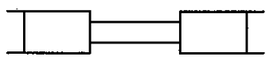 | LOCKSTILE |
| YR | DOUBLE INTERLOCK | 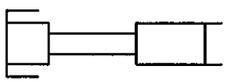 | FIXED LOCKSTILE |
| GR | DOUBLE INTERLOCK | 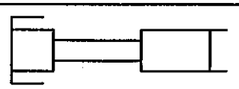 | LOCKSTILE |
| LR | REVERSE ASTRAGAL | 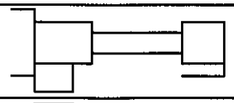 | R.H. INTERLOCK |
| WR | STANDARD ASTRAGAL | 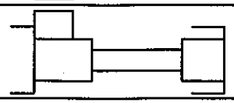 | DOUBLE INTERLOCK |
| DS | DOUBLE INTERLOCK | 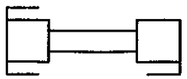 | R.H. INTERLOCK |
| SD | L.H. INTERLOCK | | DOUBLE INTERLOCK |

## CONFIGURATION NOTES:

1. MAXIMUM DAYLIGHT OPENING OF THE ADJACENT 48" NOMINAL WIDTH PANEL TYPES IS 44 1/8".
2. MAX. DLO HEIGHT = 75 3/4"
3. CONFIGURATIONS INCLUDE BY-PASS, POCKET AND ANY COMINATION THEREOF (LIMITED TO EIGHT PANELS AND SEVEN TRACK FRAMES) FRAMES OVER 3-TRACKS ARE MADE UP OF THE APPROVED FRAME COMPONENTS SHOWN ON SHEETS 13 AND 14 OF THIS NOA.

EXAMPLE MAXIMUM CONFIGURATIONS:
A. EIGHT PANELS ON FOUR TRACKS (CENTER MEET)
B. FIVE PANELS ON FIVE TRACKS (BY-PASS)

SEE LIST BELOW △J

| | |
|---|---|
| 1 | X |
| 2 | XX |
| 3 | OX |
| 4 | XO |
| 5 | OO |
| 6 | XXX |
| 7 | XOO |
| 8 | OOX |
| 9 | XXO |
| 10 | OXX |
| 11 | OXO |
| 12 | XOX |
| 13 | OOO |
| 14 | XXXX |
| 15 | OXXO |
| 16 | OXXX |
| 17 | XXXO |
| 18 | OOXX |
| 19 | XXOO |
| 20 | OOOX |
| 21 | XOOO |
| 22 | OOOO |
| 23 | XXXXX |
| 24 | OXXXX |
| 25 | OX-XXO |
| 26 | OXX-XO |
| 27 | XXXXO |
| 28 | OOOOO |
| 29 | XXX-XXX |
| 30 | OXX-XXO |
| 31 | XXXX-XXXX |
| 32 | OXXX-XXXO |

PRODUCT REVISED
as complying with the Florida Building Code
Acceptance No 11-1110.16
Expiration Date 05/22/2013
By
Miami Dade Product Control

ANTHONY LYNN MILLER
LICENSE
No. 58705
STATE OF FLORIDA
PROFESSIONAL ENGINEER
10/29/14
A. LYNN MILLER, P.E.
P.E.# 58705

| Revsd By: | Date: | Revisions: | |
|---|---|---|---|
| F.K. | 9/27/07 | I | ADD MAX. DLO HEIGHT NOTE 2. AND REVISE NOTE 3. |
| F.K. | 10/22/07 | J | REMOVE EXCESS FROM NOTE 3 AND ADD CONFIGURATION LIST |
| J.J. | 10/14/11 | K | NO CHANGE THIS SHEET |
| Drawn By: F.K. | Date: 09/08/04 | Checked By: J.J. | Date: 04/02/06 |

1070 TECHNOLOGY DRIVE
NOKOMIS, FL 34275
P.O. BOX 1529
NOKOMIS, FL 34274

PGT Visibly Better

Description: PANEL TYPES
Title: ALUM. SLIDING GLASS WINDOW, NON-IMPACT

| Series/Model: | Scale: | Sheet: | Drawing No. | Rev: |
|---|---|---|---|---|
| SGD2500 | NTS | 4 of 18 | 757-1 | K |

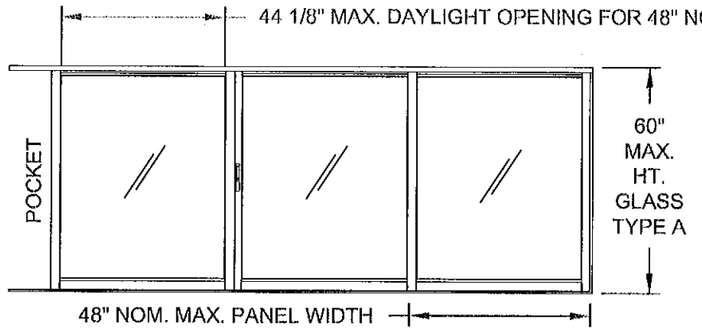


pXXO or OXXp

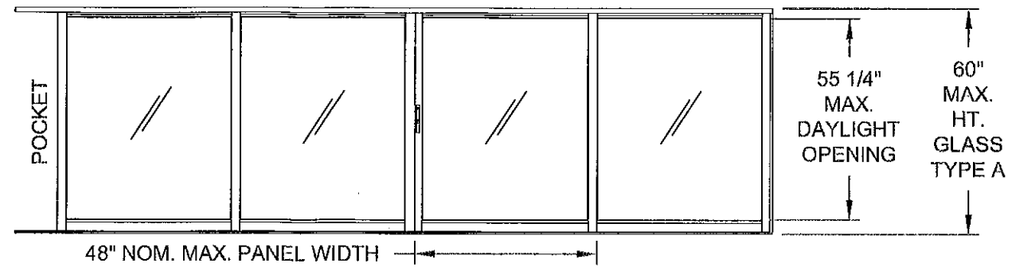


pXXXO or OXXXp

NOTES:
1. SEE SHEET 4 FOR PANEL TYPES.
2. DLO WIDTH = NOMINAL WIDTH - 3 7/8"
3. DLO HEIGHT = WINDOW HEIGHT - 4 1/4"

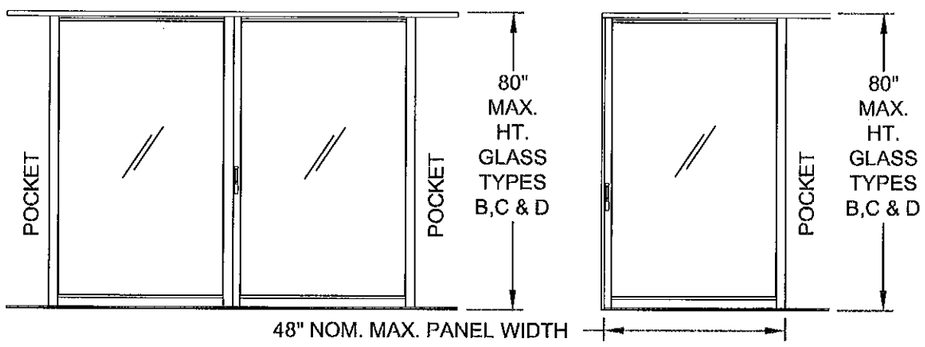


pXXp

Xp or pX

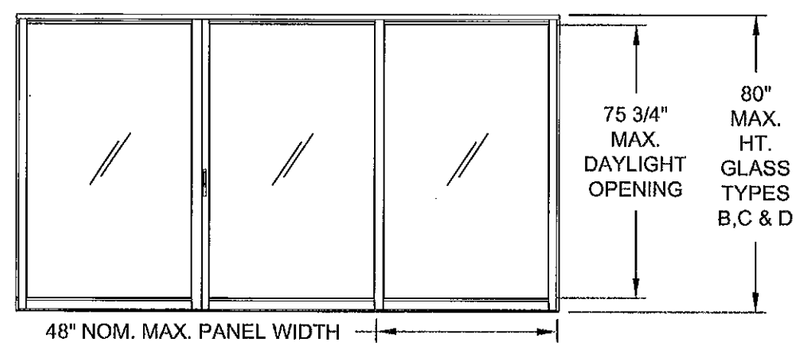


OXO

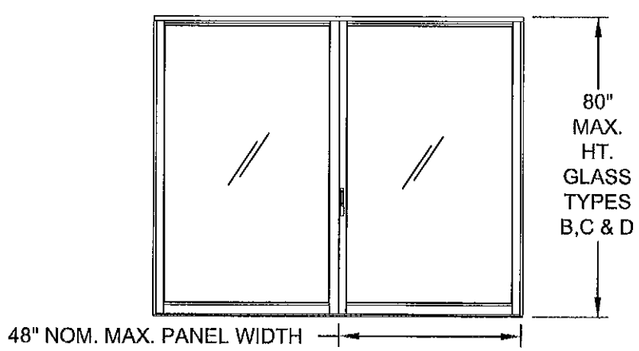


OX or XO

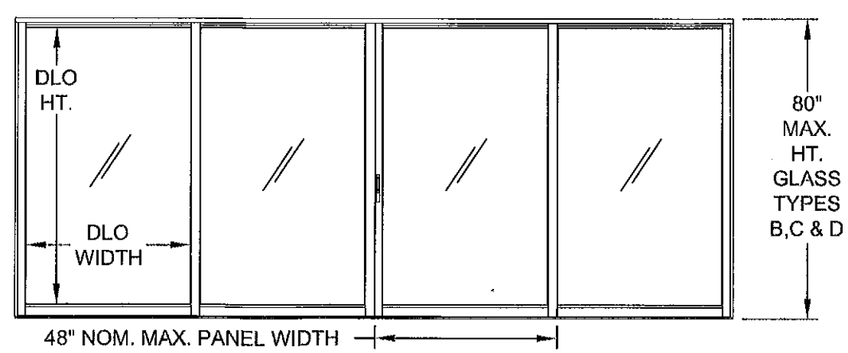


OXXO or XXXX

PRODUCT REVISED
as complying with the Florida
Building Code
Acceptance No 11-1110.14
Expiration Date 06/22/2013
By
Miami Dade Product Control

ANTHONY LYNN MILLER
LICENSE
No. 58705
10/20/11
STATE OF FLORIDA
PROFESSIONAL ENGINEER
A. LYNN MILLER, P.E.
P.E.# 58705

| Revsd By: | Date: | Revisions: | |
|---|---|---|---|
| F.K. | 9/27/07 | I | ADD MAX. DIMENSIONS AS INDICATED AND DLO INFO TO NOTES. |
| Revsd By: F.K. | Date: 10/22/07 | Revisions: J | NO CHANGES THIS SHEET |
| Revsd By: J.J. | Date: 10/14/11 | Revisions: K | NO CHANGE THIS SHEET |
| Drawn By: F.K. | Date: 09/08/04 | Checked By: J.J. | Date: 04/02/06 |

1070 TECHNOLOGY DRIVE
NOKOMIS, FL 34275
P.O. BOX 1529
NOKOMIS, FL 34274

PGT Visibly Better

Description: EXAMPLE ELEVATIONS

Title: ALUM. SLIDING GLASS WINDOW, NON-IMPACT

| Series/Model: | Scale: | Sheet: | Drawing No. | Rev: |
|---|---|---|---|---|
| SGD2500 | NTS | 5 of 18 | 757-1 | K |

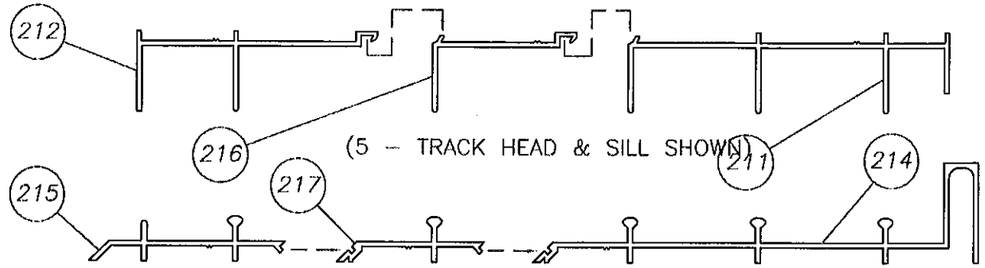


EXAMPLE MULTI–PART EXTERIOR FRAME

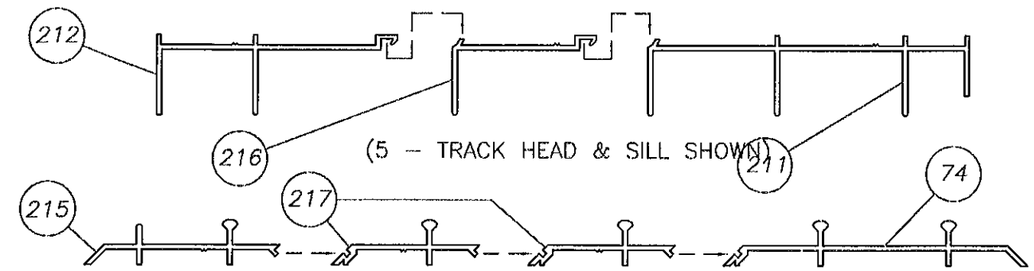


EXAMPLE MULTI–PART INTERIOR FRAME

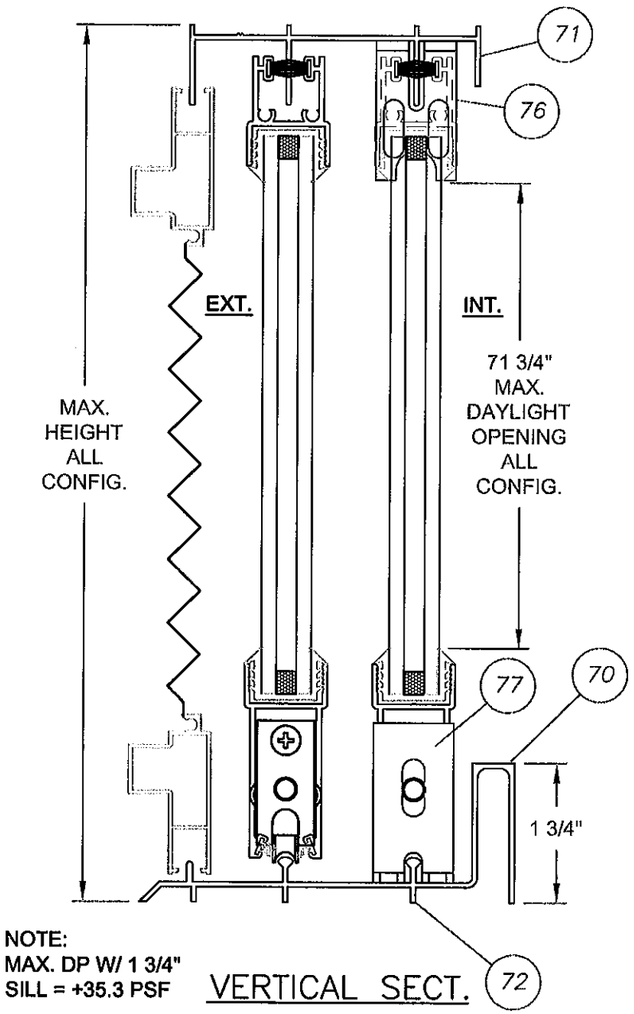


NOTE:
MAX. DP W/ 1 3/4"
SILL = +35.3 PSF

VERTICAL SECT.
STANDARD SILL

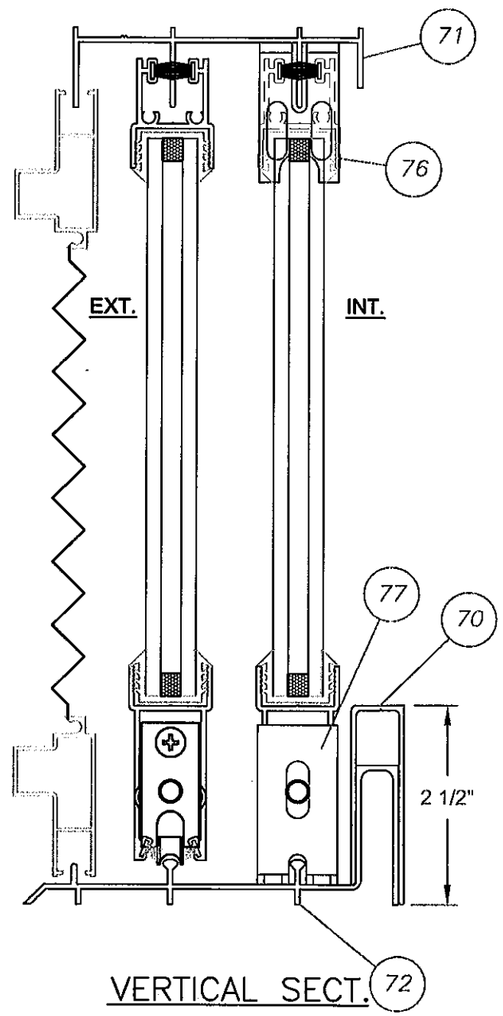


VERTICAL SECT.
EXTENDED SILL

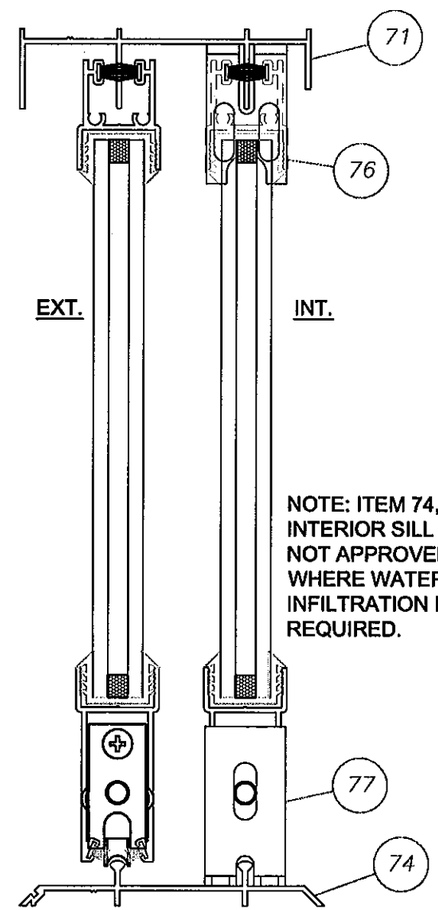


NOTE: ITEM 74, INTERIOR SILL IS NOT APPROVED WHERE WATER INFILTRATION IS REQUIRED.

VERTICAL SECT.
INTERIOR SILL

PRODUCT REVISED
as complying with the Florida
Building Code
Acceptance No 11-1110.16
Expiration Date 06/22/2013
By
Miami Dade Product Control

ANTHONY LYNN MILLER
LICENSE
No. 58705
10/29/11
STATE OF FLORIDA
PROFESSIONAL ENGINEER
A. LYNN MILLER, P.E.
P.E.# 58705

| Revsd By: | Date: | Revisions: | |
|---|---|---|---|
| F.K. | 9/27/07 | I | ADD NOTES REGARDING USE OF 1 3/4" SILL & INTERIOR SILL. ADD INTERIOR / EXTERIOR NOTATION TO VERT. SECT. |
| Revsd By: F.K. | Date: 10/22/07 | Revisions: J | NO CHANGES THIS SHEET |
| Revsd By: J.J. | Date: 10/14/11 | Revisions: K | NO CHANGE THIS SHEET |
| Drawn By: F.K. | Date: 09/08/04 | Checked By: J.J. | Date: 04/02/06 |

1070 TECHNOLOGY DRIVE
NOKOMIS, FL 34275

P.O. BOX 1529
NOKOMIS, FL 34274

PGT
Visibly Better

Description: VERTICAL SECTIONS

Title: ALUM. SLIDING GLASS WINDOW, NON-IMPACT

| Series/Model: | Scale: | Sheet: | Drawing No. | Rev: |
|---|---|---|---|---|
| SGD2500 | 1/2 | 6 of 18 | 757-1 | K |

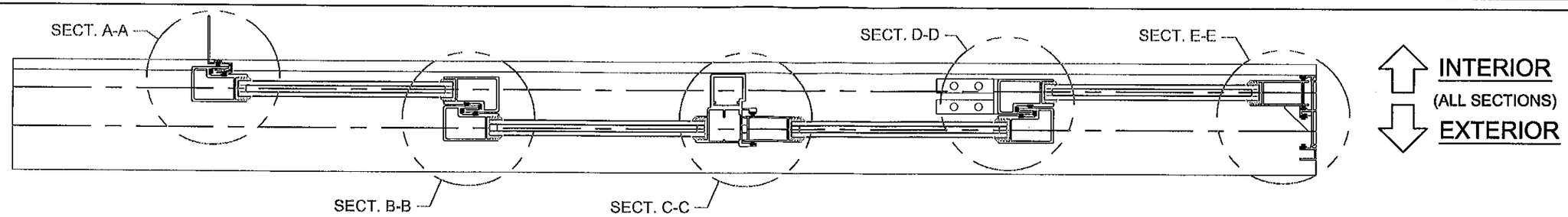


SINGLE/SINGLE INTERLOCK EXAMPLE W/ NO REINFORCEMENT (TABLE 1, SHT. 2 DESIGN PRESSURES)

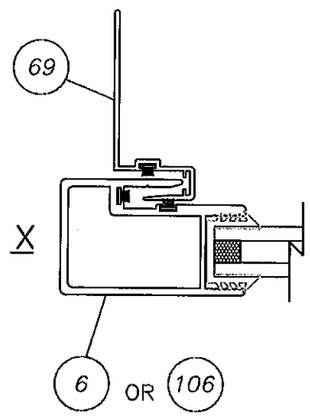


SECT. A–A
MOVABLE INTERLOCK
AT P–HOOK

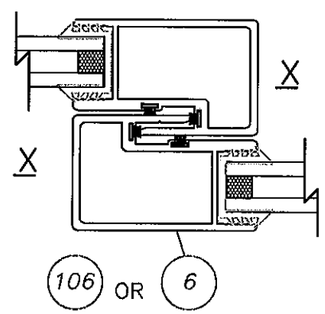


SECT. B–B
MOVABLE SINGLE/SINGLE INTERLOCK

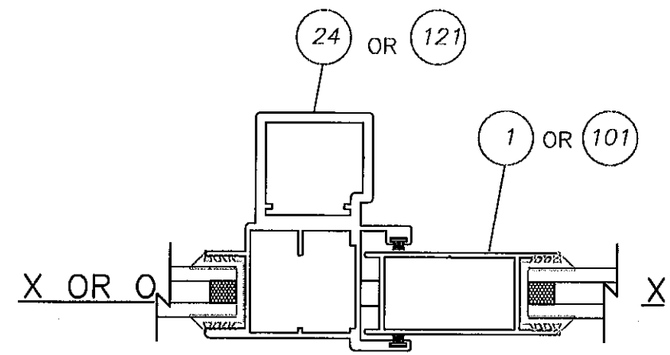


SECT. C–C
LOCKSTILE AT ASTRAGAL

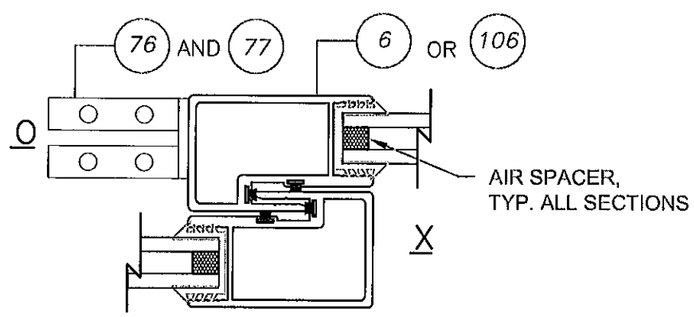


SECT. D–D
FIXED TO MOVABLE SINGLE/SINGLE INTERLOCK

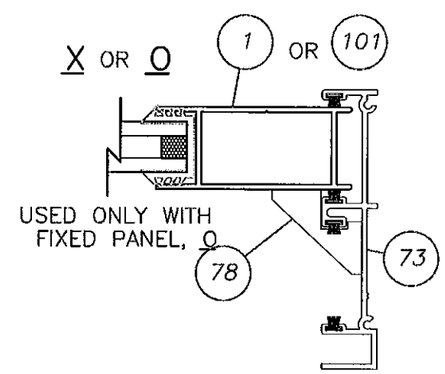


SECT. E–E
LOCKSTILE AT JAMB

PRODUCT REVISED
as complying with the Florida
Building Code
Acceptance No 11-1110.16
Expiration Date 05/22/2013
By
Miami Dade Product Control

ANTHONY LYNN MILLER
LICENSE
No. 58705
10/29/11
STATE OF
FLORIDA
PROFESSIONAL ENGINEER
A. LYNN MILLER, P.E.
P.E.# 58705

| Revsd By: | Date: | Revisions: | |
|---|---|---|---|
| F.K. | 9/27/07 | I | ISOLATE SINGLE/SINGLE INTERLOCK NO REINFORCEMENT SECT. |
| F.K. | 10/22/07 | J | NO CHANGES THIS SHEET |
| J.J. | 10/14/11 | K | NO CHANGE THIS SHEET |
| Drawn By: F.K. | Date: 09/08/04 | Checked By: J.J. | Date: 04/02/06 |

1070 TECHNOLOGY DRIVE
NOKOMIS, FL 34275

P.O. BOX 1529
NOKOMIS, FL 34274

PGT
Visibly Better

Description: HORIZONTAL SECTIONS, TABLE 1 - DPS

Title: ALUM. SLIDING GLASS WINDOW NON-IMPACT

| Series/Model: | Scale: | Sheet: | Drawing No. | Rev: |
|---|---|---|---|---|
| SGD2500 | 1/2 | 7 of 18 | 757-1 | K |

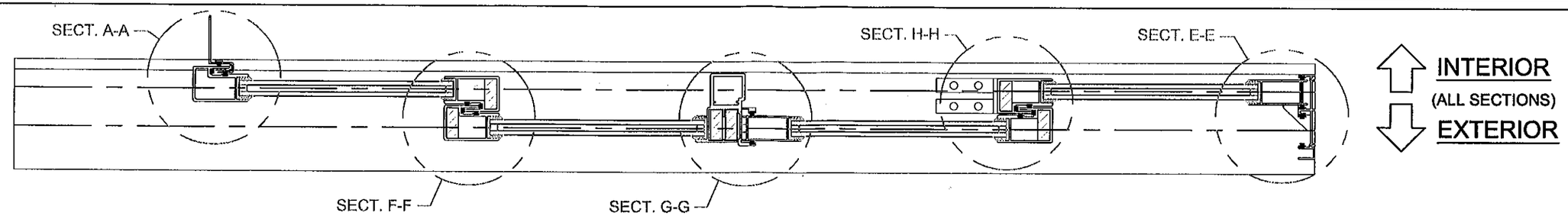


SINGLE/SINGLE INTERLOCK EXAMPLE FULL REINFORCEMENT (TABLE 2, SHT. 3 DESIGN PRESSURES)

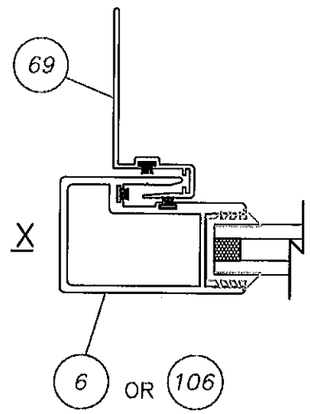


SECT. A–A
MOVABLE INTERLOCK
AT P–HOOK

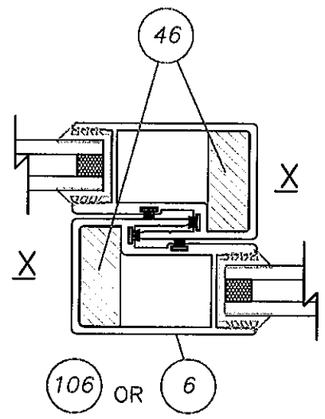


SECT. F–F
MOVABLE SINGLE/SINGLE INTERLOCK

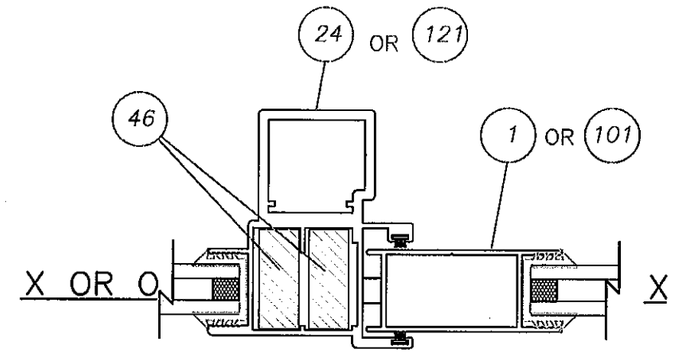


SECT. G–G
LOCKSTILE AT ASTRAGAL

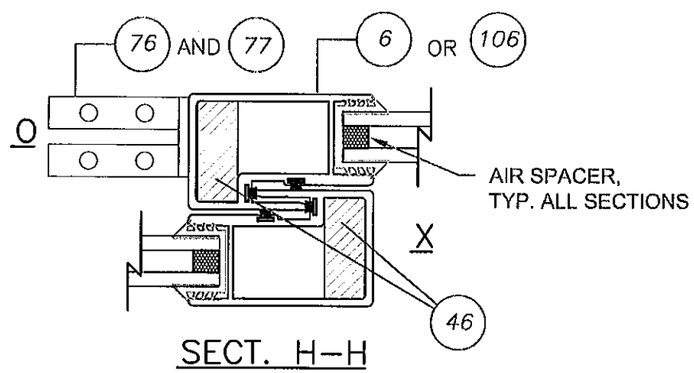


SECT. H–H
FIXED TO MOVABLE SINGLE/SINGLE INTERLOCK

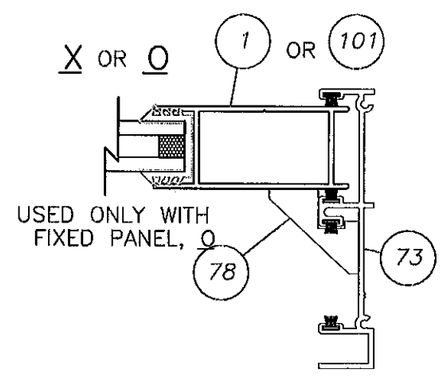


SECT. E–E
LOCKSTILE AT JAMB

PRODUCT REVISED
as complying with the Florida
Building Code
Acceptance No 11-1110.16
Expiration Date 06/22/2013
By
Miami Dade Product Control

ANTHONY LYNN MILLER
LICENSE
No. 58705
10/29/11
STATE OF
FLORIDA
PROFESSIONAL ENGINEER
A. LYNN MILLER, P.E.
P.E.# 58705

| Revsd By: | Date: | Revisions: | |
|---|---|---|---|
| F.K. | 9/27/07 | I | ISOLATE SINGLE/SINGLE INTERLOCK REINFORCED SECTIONS |
| Revsd By: F.K. | Date: 10/22/07 | Revisions: J | NO CHANGES THIS SHEET |
| Revsd By: J.J. | Date: 10/14/11 | Revisions: K | NO CHANGE THIS SHEET |
| Drawn By: F.K. | Date: 09/08/04 | Checked By: J.J. | Date: 04/02/06 |

1070 TECHNOLOGY DRIVE
NOKOMIS, FL 34275

P.O. BOX 1529
NOKOMIS, FL 34274

PGT
Visibly Better

Description: HORIZONTAL SECTIONS, TABLE 2 - DPS

Title: ALUM. SLIDING GLASS WINDOW NON-IMPACT

| Series/Model: | Scale: | Sheet: | Drawing No. | Rev: |
|---|---|---|---|---|
| SGD2500 | 1/2 | 8 of 18 | 757-1 | K |

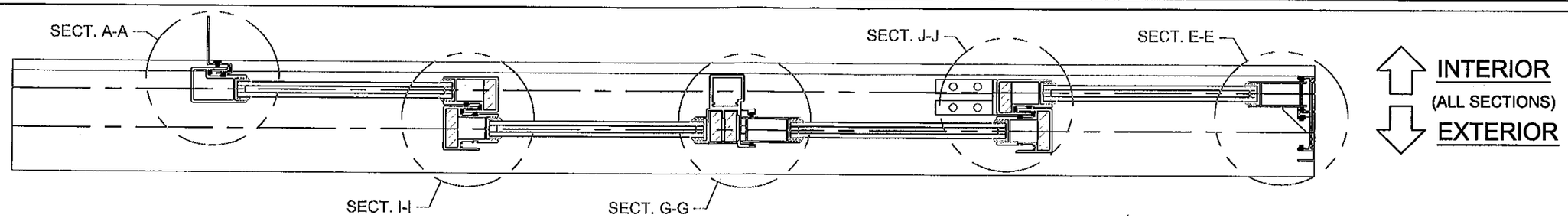


SINGLE/DOUBLE INTERLOCK EXAMPLE FULL REINFORCEMENT (TABLE 3, SHT. 3 DESIGN PRESSURES)

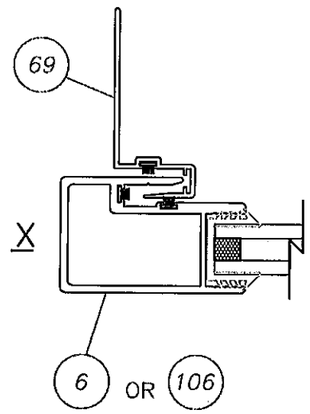


SECT. A–A
MOVABLE INTERLOCK
AT P–HOOK

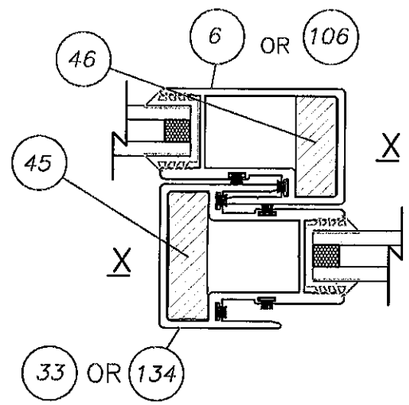


SECT. I–I
MOVABLE SINGLE/DOUBLE INTERLOCK

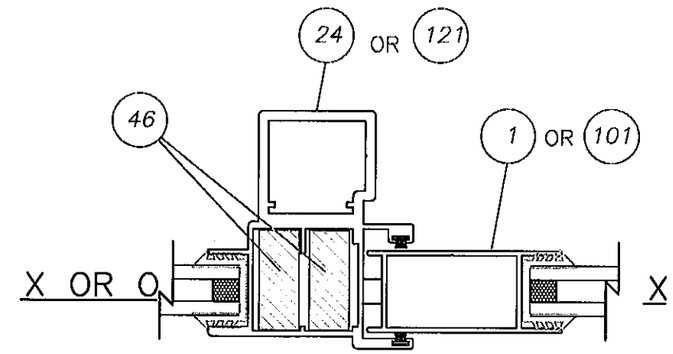


SECT. G–G
LOCKSTILE AT ASTRAGAL

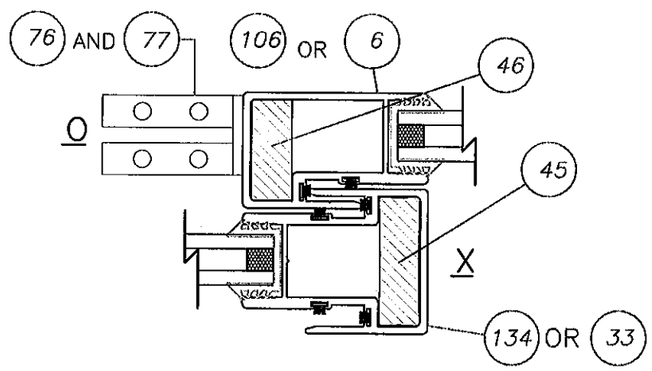


SECT. J–J
FIXED TO MOVABLE SINGLE/SINGLE INTERLOCK

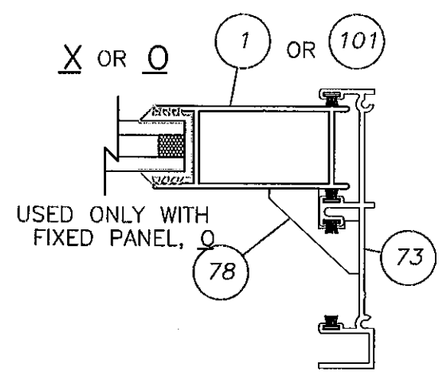


SECT. E–E
LOCKSTILE AT JAMB

PRODUCT REVISED
as complying with the Florida
Building Code
Acceptance No 11-1110.16
Expiration Date 05/22/2013
By
Miami Dade Product Control

ANTHONY LYNN MILLER
LICENSE
No. 58705
10/29/11
STATE OF
FLORIDA
PROFESSIONAL ENGINEER
A. LYNN MILLER, P.E.
P.E.# 58705

| Revsd By: | Date: | Revisions: | |
|---|---|---|---|
| F.K. | 9/27/07 | I | ISOLATE SINGLE/DOULBE INTERLOCK REINFORCED SECTIONS |
| Revsd By: F.K. | Date: 10/22/07 | Revisions: J | NO CHANGES THIS SHEET |
| Revsd By: J.J. | Date: 10/14/11 | Revisions: K | NO CHANGE THIS SHEET |
| Drawn By: F.K. | Date: 09/08/04 | Checked By: J.J. | Date: 04/02/06 |

1070 TECHNOLOGY DRIVE
NOKOMIS, FL 34275

P.O. BOX 1529
NOKOMIS, FL 34274

PGT
Visibly Better

Description: HORIZONTAL SECTIONS, TABLE 3 - DPS

Title: ALUM. SLIDING GLASS WINDOW NON-IMPACT

| Series/Model: | Scale: | Sheet: | Drawing No. | Rev: |
|---|---|---|---|---|
| SGD2500 | 1/2 | 9 of 18 | 757-1 | K |

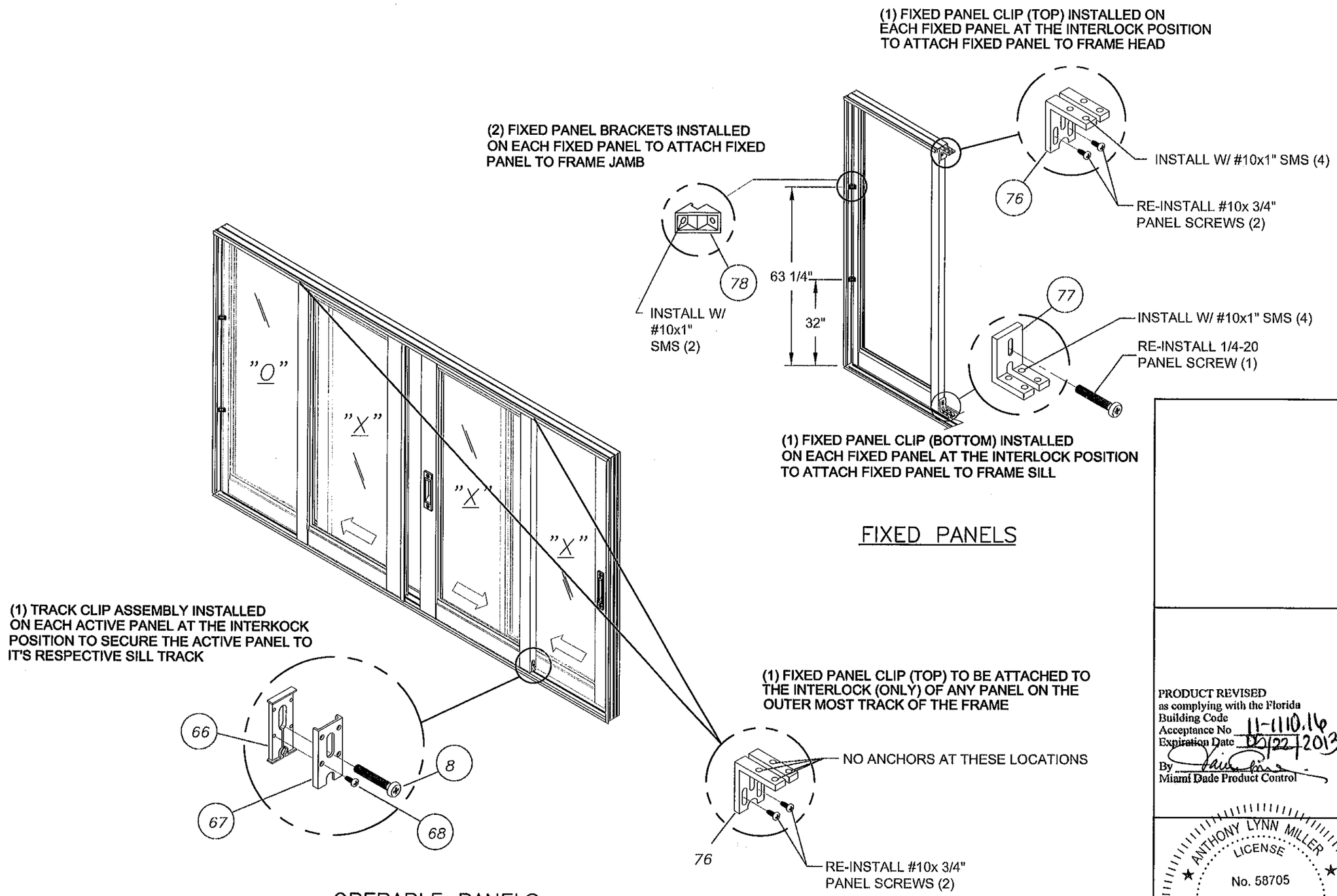


PRODUCT REVISED
as complying with the Florida Building Code
Acceptance No 11-1110.16
Expiration Date 10/22/2013
By
Miami Dade Product Control

ANTHONY LYNN MILLER
LICENSE
No. 58705
10/29/11
STATE OF FLORIDA
PROFESSIONAL ENGINEER

A. LYNN MILLER, P.E.
P.E.# 58705

| Revsd By: | Date: | Revisions: | |
|---|---|---|---|
| F.K. | 9/27/07 | I | SHOW PANELS SCREWS TO REINSTALL W/ ITEMS 76 & 77 CHANGE ITEM NO. TO MATCH RESORTED PARTS LIST |
| F.K. | 10/22/07 | J | NO CHANGES THIS SHEET |
| J.J. | 10/14/11 | K | ADDED FIXED CLIP TO INTERLOCK TO PREVENT SASH FALLING OUT |
| Drawn By: F.K. | Date: 09/08/04 | Checked By: J.J. | Date: 04/02/06 |

1070 TECHNOLOGY DRIVE
NOKOMIS, FL 34275

P.O. BOX 1529
NOKOMIS, FL 34274

PGT
Visibly Better

Description: TRACK CLIP & FIXED CLIPS INSTALLATION

Title: ALUM. SLIDING GLASS WINDOW, NON-IMPACT

| Series/Model: | Scale: | Sheet: | Drawing No. | Rev: |
|---|---|---|---|---|
| SGD2500 | 1/2 | 10 of 18 | 757-1 | K |

| ITEM | PART # | DESCRIPTION | PGT# |
|---|---|---|---|
| 1 | 708 | LOCKSTILE, MONOLITHIC | 69362 |
| 2 | | LATCH ASSEMBLY (LOCK) | 7LOCK |
| 3 | | LATCH ASSEMBLY (DUMMY) | 7DUMY |
| 4 | | #10-32 X 1.25 PH. FL. MS (LATCH) | 71114K |
| 6 | 705 | INTERLOCK (STD.), MONOLITHIC | 69409 |
| 7 | 1119 | #10 X .750 PH. PN. SMS - S.S. | 7S134X |
| 8 | | 1/4-20 X 1.125 PH. PN. MS | 71420X118PPMSX |
| 9 | 1209 | WSTP, .187 X 320 - PILE | 6FELTK |
| 11 | 706 | TOP RAIL, MONOLITHIC | 68172 |
| 12 | 1281 | WSTP, .187 X .290 FIN SEAL | 61281W |
| 13 | 725B | TOP PANEL GUIDE | 41801 |
| 15 | 707C | BOTTOM RAIL, MONOLITHIC | 68173 |
| 17 | 726 | BOTTOM PANEL GUIDE | 41802 |
| 18 | 661 | SINGLE ROLLER ASSY. | 7SRAZ |
| 19 | 661 | SINGLE ROLLER ASSY. - S.S. | 7SRAX |
| 20 | 683 | TANDEM ROLLER ASSY. | 7683Z |
| 21 | 683 | TANDEM ROLLER ASSY. - S.S. | 7683SS |
| 23 | 609 | ASTRAGAL, MONOLITHIC | 68315 |
| 24 | 720 | ASTRAGAL (H.D.), MONOLITHIC | 69492 |
| 26 | 653 | LATCH KEEPER | 7SDKEEP |
| 27 | 653 | LATCH KEEPER - S.S. | 7SDKEEPX |
| 28 | | #8 X .312 PH. TR. SMS | 78X56A |
| 29 | 729 | JAMB BUMPER | 72087K |
| 30 | | #6 X .375 PH. PN. SMS | 76X38PPA |
| 31 | 663/664 | BUMPER SHIM (.030 OR .060) | 41831 |
| 33 | 734 | DOUBLE INTERLOCK (STD.), MONO. | 69494 |
| 36 | 1007 | GLAZING VINYL - 3/16 | 6T304 |
| 37 | | GLAZING VINYL - 1/4 | 614GLK |
| 38 | | 3/16" ANNEALED GLASS | |
| 39 | | 3/16" TEMPERED GLASS | |
| 40 | | 1/4" TEMPERED GLASS | |
| 42 | 645 | ADD-ON STILE (OXO ONLY) | 69112 |
| 45 | 755 | 1/2 X 1 5/8 REINF. - ALUM | 6755M |
| 46 | 1214 | 1/2 X 1 1/4 REINF. - ALUM. | 61214M |
| 49 | 749 | REINFORCEMENT SPRING CLIP | 7BRKTM25 |
| 51 | 1040 | MORTICE LOCK (DEAD LATCH) | 71040 |
| 52 | 1040-2 | MORTICE LOCK (DEAD LATCH) S.S. | 71040X |
| 53 | | CYLINDER/HOUSING ASSY. (MORTICE) | 70288K |
| 54 | 1016 | #8 X .625 PH. FL. SMS | 7858ZA |
| 55 | 657 | BACKING PLATE (MORTICE) | 41830N |
| 56 | 1045 | MORTICE HANDLE SET | 71045 |
| 57 | | COVER PLATE | 7VT43 |
| 58 | 659 | MORTICE LATCH KEEPER | 7SDSP5X1 |
| 60 | 1239 | 3/16" APPLIED MUNTIN | 68421 |
| 61 | 665 | COLONIAL ENDPIECE | 41628 |

| ITEM | PART # | DESCRIPTION | PGT# |
|---|---|---|---|
| 62 | 522 | COLONIAL INTERSECTION | 41630 |
| 63 | 124 | APPLIED COLONIAL MUNTIN | 66631 |
| 64 | 1240 | 1/16 X 1 FLATBAR | 68926T52 |
| 66 | 754 | TRACK CLIP GUIDE | 41754B/W |
| 67 | 756 | TRACK CLIP COVER | 6756B/W |
| 68 | | #6 X 3/8 PP SMS (18-8 SS) | 76X38PPAX |
| 69 | 740 | HOOKSTRIP (P-HOOK) | 63713 |
| 70 | 722A | HIGH-RISE TRACK ADAPTER | 69371 |
| 71 | 702 | 2-TRACK HEAD | 68179 |
| 72 | 703B | 2-TRACK EXTERIOR SILL | 6703B |
| 73 | 704 | 2-TRACK JAMB | 68180 |
| 74 | 637 | 2-TRACK INTERIOR SILL | 68275 |
| 76 | 717 | FIXED PANEL CLIP, TOP | 7LA13A |
| 77 | 717B | FIXED PANEL CLIP, BOTTOM | 7717FPCA |
| 78 | 646 | FIXED PANEL BRACKET | 41814 |
| 90 | 1136 | #6 X 1/2 PP SMS | 76X12A |
| 101 | 736 | LOCKSTILE, I.G. GLASS | 60392 |
| 106 | 735 | INTERLOCK (STD.) I.G. GLASS | 60393 |
| 111 | 618 | TOP RAIL, I.G. GLASS | 69088 |
| 115 | 619 | BOTTOM RAIL, I.G. GLASS | 69089 |
| 121 | 737 | ASTRAGAL, I.G. GLASS | 60394 |
| 130 | | 5/8" I.G. GLASS; 3/16" TEMPERED 1/4" SPACE, 3/16" TEMPERED | |
| 131 | 1006 | GLAZING VINYL - INSULATED GLASS | 658GLK |
| 134 | 745 | DOUBLE INTERLOCK (STD.), I.G. GLASS | 60551 |
| 203 | 666 | OPT. SCREEN RAIL, POCKET DOOR | 61394 |
| 208 | 631 | 3 - TRACK HEAD | 68182 |
| 209 | 632 | 3 - TRACK JAMB | 68183 |
| 210 | 633 | 3 - TRACK SILL, EXT. W/ SCREEN RAIL | 68184M |
| 211 | 613 | ADD-ON TRACK HEAD | 68187 |
| 212 | 614 | ADD-ON TRACK FOR FRAME HEAD | 68185 |
| 213 | 617 | 2 - TRACK FRAME JAMB, ADD-ON | 68188 |
| 214 | 615 | 3 - TRACK SILL, ADD-ON | 68189M |
| 215 | 616 | ADD-ON TRACK W/ SCREEN FOR SILL | 68190M |
| 216 | 634 | ADD-ON HEAD | 68186 |
| 217 | 635 | ADD-ON SILL | 68191M |
| 218 | 638 | LOW-RISE 2 - TRACK SILL, EXTERIOR | 68952M |
| 220 | 636 | 1 - TRACK SILL, INTERIOR ADD-ON | 68274M |
| 222 | 671 | LOW-RISE 1 - TRACK SILL, EXTERIOR | 60803M |
| 225 | 732 | HIGH-RISE TRACK ADAPTER | 68313M |

J

PRODUCT REVISED
as complying with the Florida
Building Code
Acceptance No 11-1110.16
Expiration Date 12/22/2013
By
Miami Dade Product Control

ANTHONY LYNN MILLER
LICENSE
No. 58705
10/29/11
STATE OF FLORIDA
PROFESSIONAL ENGINEER
A. LYNN MILLER, P.E.
P.E.# 58705

| Revsd By: | Date: | Revisions: | |
|---|---|---|---|
| F.K. | 9/27/07 | I | CONSOLIDATE AND SORT PARTS LIST |
| F.K. | 10/22/07 | J | DELETE ITEMS 201, 202 AND 204, 1-TRACK FRAMES |
| J.J. | 10/14/11 | K | NO CHANGE THIS SHEET |
| Drawn By: F.K. | Date: 09/08/04 | Checked By: J.J. | Date: 04/02/06 |

1070 TECHNOLOGY DRIVE
NOKOMIS, FL 34275

P.O. BOX 1529
NOKOMIS, FL 34274

PGT
Visibly Better

Description: PARTS LISTS

Title: ALUM. SLIDING GLASS WINDOW, NON-IMPACT

| Series/Model: | Scale: | Sheet: | Drawing No. | Rev: |
|---|---|---|---|---|
| SGD2500 | NTS | 11 of 18 | 757-1 | K |

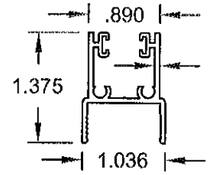


(111) I.G. TOP RAIL
MAT'L: 6063–T5
#618

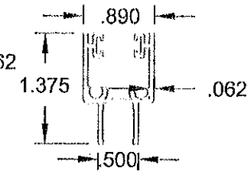


(11) TOP RAIL
MAT'L: 6063–T5
#706

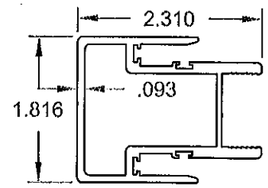


(134) I.G. DOUBLE INTERLOCK
MATL:6063–T6
#745

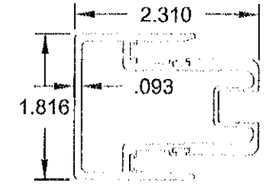


(33) STD. DOUBLE INTERLOCK
MAT'L: 6063–T6
#734

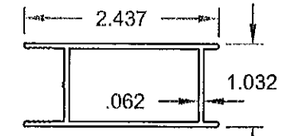


(101) I.G. LOCKSTILE
MAT'L: 6063–T6
#736

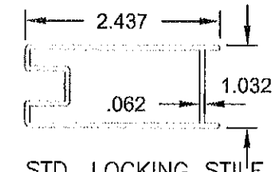


(1) STD. LOCKING STILE
MAT'L: 6063–T6
#708

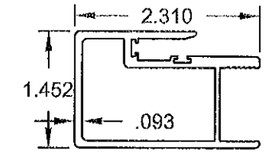


(106) I.G. INTERLOCK
MATL: 6063–T6
#735

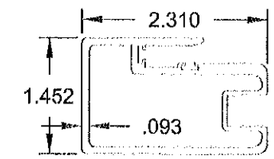


(6) STD. INTERLOCK
MAT'L: 6063–T6
#705

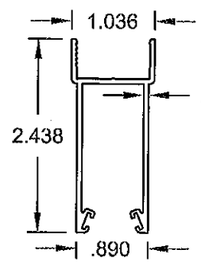


(115) I.G. BOTTOM RAIL
MAT'L: 6063–T6
#619

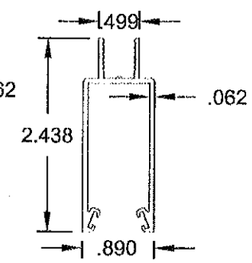


(15) BOTTOM RAIL
MAT'L: 6063–T5
#707

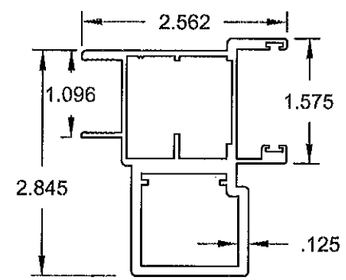


(121) I.G. ASTRAGAL
MAT'L: 6063–T6
#737

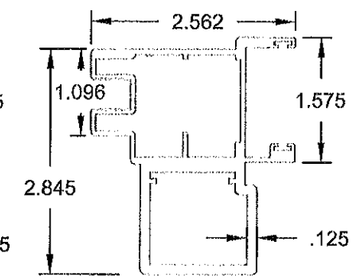


(23) H.D. ASTRAGAL
MAT'L: 6063–T6
#720

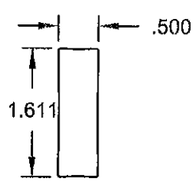


(45) REINFORCEMENT
MAT'L: 6063–T6
#755

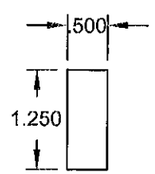


(46) REINFORCEMENT
MAT'L: 6063–T6
#1214

NOTE: ITEMS 45 AND 46 LENGTH = PANEL HT. – 4 1/4"

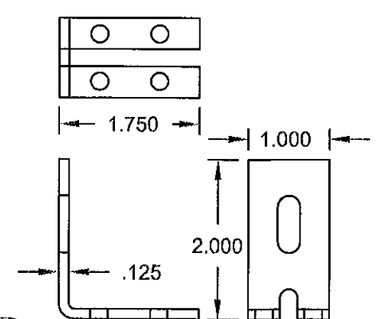


(77) FIXED PANEL CLIP, BOTTOM
MAT'L: 6063–T6
#717B

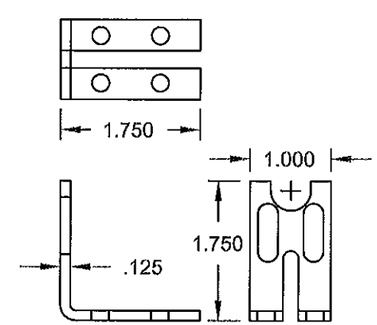


(76) FIXED PANEL CLIP, TOP
MAT'L: 6063–T6
#717

PRODUCT REVISED
as complying with the Florida
Building Code
Acceptance No 11-1110.16
Expiration Date 06/22/2013
By
Miami Dade Product Control

ANTHONY LYNN MILLER
LICENSE
No. 58705
10/29/11
STATE OF
FLORIDA
PROFESSIONAL ENGINEER
A. LYNN MILLER, P.E.
P.E.# 58705

| Revsd By: | Date: | Revisions: | |
|---|---|---|---|
| F.K. | 9/27/07 | I | ADD LENGTH NOTE TO ITEMS 45 & 46. CORRECT ITEM 77 PER BOM |
| Revsd By: F.K. | Date: 10/22/07 | Revisions: J | NO CHANGES THIS SHEET |
| Revsd By: J.J. | Date: 10/14/11 | Revisions: K | NO CHANGE THIS SHEET |
| Drawn By: F.K. | Date: 09/08/04 | Checked By: J.J. | Date: 04/02/06 |

1070 TECHNOLOGY DRIVE
NOKOMIS, FL 34275

P.O. BOX 1529
NOKOMIS, FL 34274

PGT
Visibly Better

Description: EXTRUSIONS, PANELS

Title: ALUM. SLIDING GLASS WINDOW, NON-IMPACT

| Series/Model: | Scale: | Sheet: | Drawing No. | Rev: |
|---|---|---|---|---|
| SGD2500 | NTS | 12 of 18 | 757-1 | K |

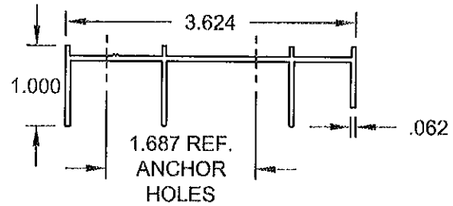


(71) 2 – TRACK HEAD
MAT'L: 6063–T6
#702

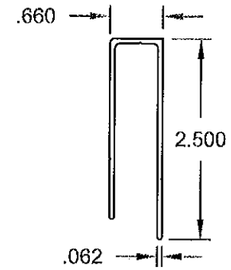


(70) HI–RISE TRACK ADAPTER
MAT'L: 6063–T5
#722A

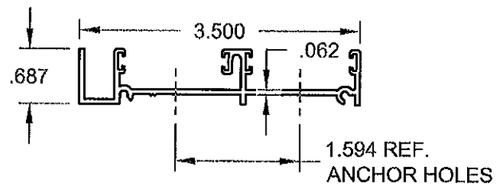


(73) 2 – TRACK JAMB
MAT'L: 6063–T6
#704

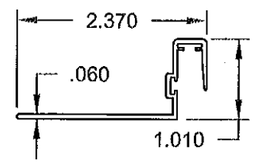


(69) HOOKSTRIP
MAT'L: 6063–T5
#740

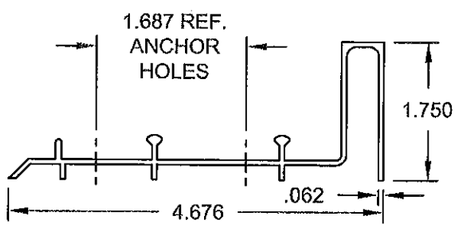


(72) 2 – TRACK EXTERIOR SILL
MAT'L: 6063–T6
#703B

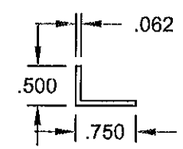


(203) OPTIONAL SCREEN
RAIL, POCKET
MAT'L: 6063–T5
#666

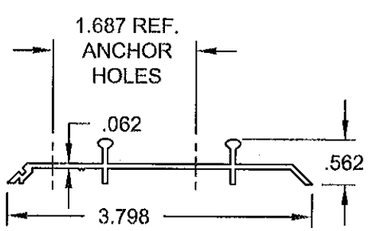


(74) 2 – TRACK INTERIOR SILL
MAT'L: 6063–T6
#637

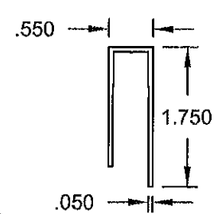


(225) HI–RISE TRACK ADAPTER
MAT'L: 6063–T5
#732

PRODUCT REVISED
as complying with the Florida
Building Code
Acceptance No 11-1110.16
Expiration Date 05/22/2013
By
Miami Dade Product Control

ANTHONY LYNN MILLER
LICENSE
No. 58705
10/24/11
STATE OF
FLORIDA
PROFESSIONAL ENGINEER
A. LYNN MILLER, P.E.
P.E.# 58705

| Revsd By: | Date: | Revisions: | |
|---|---|---|---|
| F.K. | 9/27/07 | I | DELETE ITEMS 227 & 228 AND CORRECT ITEM 202 PART NO. |
| Revsd By: F.K. | Date: 10/22/07 | Revisions: J | DELETE ITEMS 201, 202 AND 204, 1-TRACK FRAMES |
| Revsd By: J.J. | Date: 10/14/11 | Revisions: K | NO CHANGE THIS SHEET |
| Drawn By: F.K. | Date: 09/08/04 | Checked By: J.J. | Date: 04/02/06 |

1070 TECHNOLOGY DRIVE
NOKOMIS, FL 34275

P.O. BOX 1529
NOKOMIS, FL 34274

PGT
Visibly Better

Description: EXTRUSIONS, FRAME

Title: ALUM. SLIDING GLASS WINDOW, NON-IMPACT

| Series/Model: | Scale: | Sheet: | Drawing No. | Rev: |
|---|---|---|---|---|
| SGD2500 | NTS | 13 of 18 | 757-1 | K |

# ADDED FRAME COMPONENTS

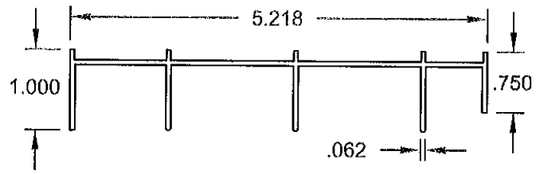


208 3 – TRACK HEAD
MAT'L: 6063–T6
#631

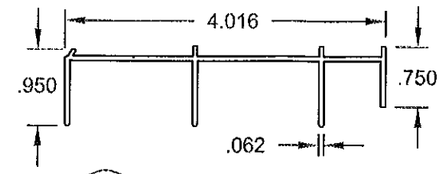


211 ADD–ON TRACK HEAD
MAT'L: 6063–T6
#613

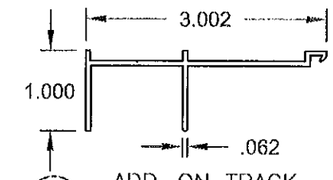


212 ADD–ON TRACK,
FOR FRAME HEAD
MAT'L: 6063–T6
#614

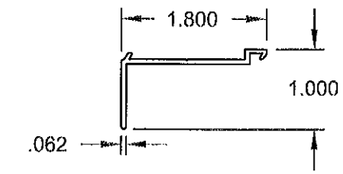


216 ADD–ON HEAD
MAT'L: 6063–T6
#634

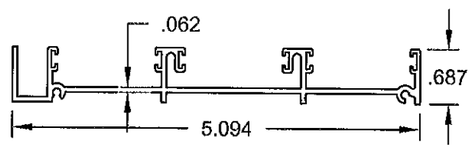


209 3 – TRACK JAMB
MAT'L: 6063–T6
#632

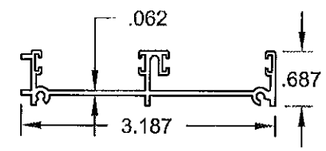


213 2 – TRACK FRAME,
JAMB ADD–ON
MAT'L: 6063–T6
#617

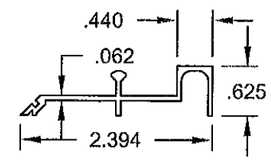


222 –TRACK SILL, LOW –RISE
EXTERIOR W/ ADD–ON
MAT'L: 6063–T6
#671

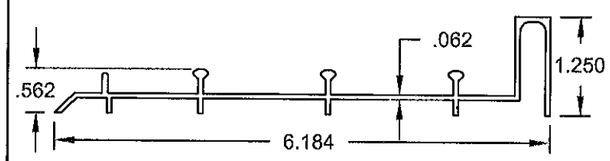


210 3 –TRACK SILL, EXTERIOR
W/ SCREEN RAIL
MAT'L: 6063–T6
#633

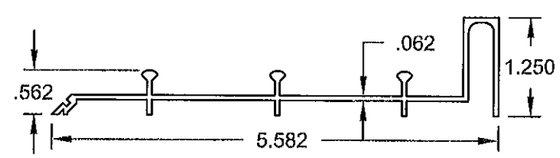


214 3 – TRACK ADD–ON SILL
MAT'L: 6063–T6
#615

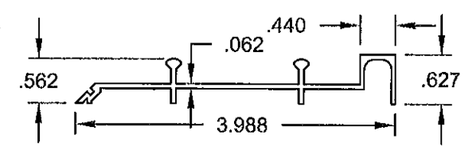


218 –TRACK SILL, LOW –RISE
EXTERIOR W/ ADD–ON
MAT'L: 6063–T6
#638

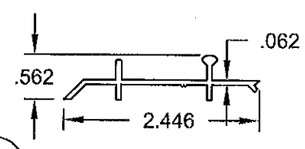


215 ADD–ON TRACK W/
SCREEN FOR FRAME SILL
MAT'L: 6063–T6
#616

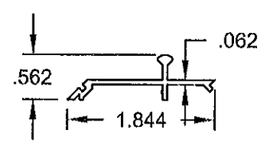


217 1 –TRACK ADD–ON SILL
MAT'L: 6063–T6
#635

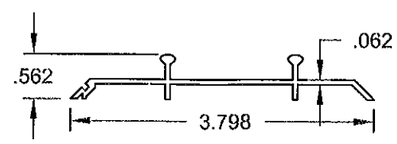


119 2 –TRACK SILL,
INTERIOR W/ ADD–ON
MAT'L: 6063–T6
#637

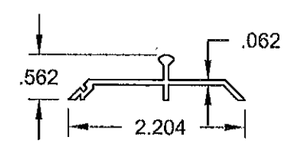


220 1 –TRACK SILL,
INTERIOR W/ ADD–ON
MAT'L: 6063–T6
#636

PRODUCT REVISED
as complying with the Florida
Building Code
Acceptance No 11-1110.16
Expiration Date 05/22/2013
By
Miami Dade Product Control

ANTHONY LYNN MILLER
LICENSE
No. 58705
10/24/11
STATE OF
FLORIDA
PROFESSIONAL ENGINEER

A. LYNN MILLER, P.E.
P.E.# 58705

| Revsd By: | Date: | Revisions: | |
|---|---|---|---|
| F.K. | 9/27/07 | I | NO CHANGES THIS SHEET |
| Revsd By: F.K. | Date: 10/22/07 | Revisions: J | NO CHANGES THIS SHEET |
| Revsd By: J.J. | Date: 10/14/11 | Revisions: K | NO CHANGE THIS SHEET |
| Drawn By: F.K. | Date: 09/08/04 | Checked By: | Date: |

1070 TECHNOLOGY DRIVE
NOKOMIS, FL 34275

P.O. BOX 1529
NOKOMIS, FL 34274

PGT
Visibly Better

Description: EXTRUSIONS, FRAME (CONTINUED)

Title: ALUM. SLIDING GLASS WINDOW, NON-IMPACT

| Series/Model: | Scale: | Sheet: | Drawing No. | Rev: |
|---|---|---|---|---|
| SGD2500 | NTS | 14 of 18 | 757-1 | K |

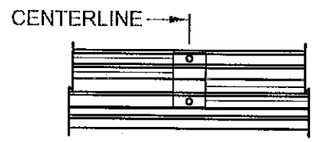


*(2) ANCHOR CLUSTER - C2*

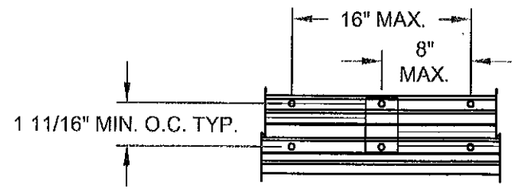


*(6) ANCHOR CLUSTER - C6*

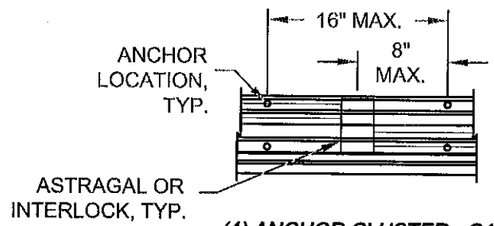


*(4) ANCHOR CLUSTER - C4*

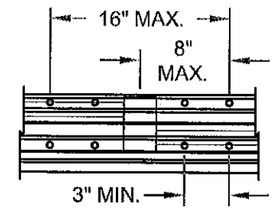


*(8) ANCHOR CLUSTER - C8*

## HEAD & SILL ANCHOR CLUSTER DETAILS FOR ASTRAGALS AND INTERLOCKS

NOTES:

1. ANCHOR QUANTITIES BASED ON THE FOLLOWING SPACING:

   JAMBS AND P-HOOKS SPACING - 6" MAX. FROM CORNERS AND 28" MAX. O.C.

   HEAD AND SILL SPACING - 6" MAX. FROM CORNERS AND 22 5/16" MAX. O.C.

2. INSTALL PER ANCHOR QUANTITIES OF TABLE 4, SHEET 16, USING THE DIMENSIONAL CRITERIA OF NOTE 4. HEAD AND SILL CLUSTER ANCHORS ARE REQUIRED AT ASTRAGAL AND INTERLOCK LOCATIONS OF THEIR RESPECTIVE TRACK SECTIONS. SEE SHEET 18 FOR POTENTIAL ANCHOR LOCATIONS WITHIN HEAD, SILL AND JAMB TRACK SECTIONS.

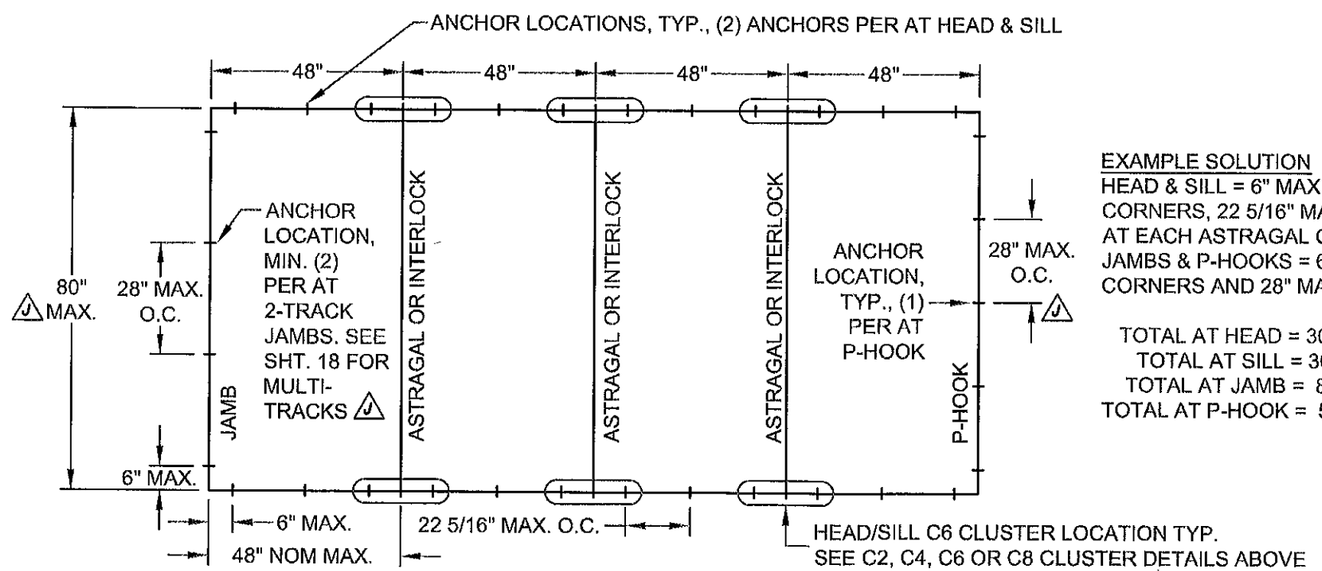


EXAMPLE SOLUTION
HEAD & SILL = 6" MAX. FROM CORNERS, 22 5/16" MAX. O.C. AND C6 AT EACH ASTRAGAL OR INTERLOCK. JAMBS & P-HOOKS = 6" MAX. FROM CORNERS AND 28" MAX. O.C.

TOTAL AT HEAD = 30 ANCHORS
TOTAL AT SILL = 30 ANCHORS
TOTAL AT JAMB = 8 ANCHORS
TOTAL AT P-HOOK = 5 ANCHORS

## FOUR PANEL DOOR ANCHORAGE LAYOUT EXAMPLE FROM TABLE 4, SHEET 16

PRODUCT REVISED
as complying with the Florida Building Code
Acceptance No 11-1110.16
Expiration Date 05/22/2013
By
Miami Dade Product Control

ANTHONY LYNN MILLER
LICENSE
No. 58705
10/29/11
STATE OF FLORIDA
PROFESSIONAL ENGINEER
A. LYNN MILLER, P.E.
P.E.# 58705

| Revsd By: | Date: | Revisions: | |
|---|---|---|---|
| F.K. | 9/27/07 | I | ADD ELEVATION DIAGRAM AND REVISE ANCHOR NOTES 4 & 5 REF. MULTI-TRACK ANCHOR LOCATION 16. ADD C8 CLUSTER. |
| F.K. | 10/22/07 | J | CORRECT DOOR HEIGHT DIMENSION. ADD P-HOOK MAX. SPACING & JAMB MIN./,MULTI-TRACK NOTE. |
| J.J. | 10/14/11 | K | NO CHANGE THIS SHEET |
| Drawn By: F.K. | Date: 09/08/04 | Checked By: J.J. | Date: 04/02/06 |

1070 TECHNOLOGY DRIVE
NOKOMIS, FL 34275

P.O. BOX 1529
NOKOMIS, FL 34274

PGT
Visibly Better

Description: ANCHORAGE SPACING AND CLUSTER DETAILS
Title: ALUM. SLIDING GLASS WINDOW, NON-IMPACT

| Series/Model: | Scale: | Sheet: | Drawing No. | Rev: |
|---|---|---|---|---|
| SGD2500 | NTS | 15 of 18 | 757-1 | K |

# HEAD & SILL ANCHOR CLUSTERS - JAMB & P-HOOK ANCHOR QUANTITIES

**TABLE 4.**

| DP TABLE REF. > | SHEET 2, TABLE 1. | | | | | | | | | SHEET 2, TABLE 1. | | | | | | | | | SHEET 3, TABLE 2. | | | | | | | | | SHEET 3, TABLE 3. | | | | | | | | |
|---|---|---|---|---|---|---|---|---|---|---|---|---|---|---|---|---|---|---|---|---|---|---|---|---|---|---|---|---|---|---|---|---|---|---|---|---|
| GLASS TYPE > | A | | | | | | | | | B OR D | | | | | | | | | B OR D | | | | | | | | | C OR D | | | | | | | | |
| INTERLOCK & > REINFORCEMENT | SSN | | | | | | | | | SSN | | | | | | | | | SSR | | | | | | | | | SDR | | | | | | | | |
| ANCHOR TYPE & SUBSTRATE ~ | HEAD & SILL CLUSTER | | | JAMB | | | P-HOOK | | | HEAD & SILL CLUSTER | | | JAMB | | | P-HOOK | | | HEAD & SILL CLUSTER | | | JAMB | | | P-HOOK | | | HEAD & SILL CLUSTER | | | JAMB | | | P-HOOK | | |
| NOM. PANEL WIDTH x UNIT HT. | 2,3,WOOD | 1,CONC | 2,CONC | 2,3,WOOD | 1,CONC | 2,CONC | 2,3,WOOD | 1,CONC | 2,CONC | 2,3,WOOD | 1,CONC | 2,CONC | 2,3,WOOD | 1,CONC | 2,CONC | 2,3,WOOD | 1,CONC | 2,CONC | 2,3,WOOD | 1,CONC | 2,CONC | 2,3,WOOD | 1,CONC | 2,CONC | 2,3,WOOD | 1,CONC | 2,CONC | 2,3,WOOD | 1,CONC | 2,CONC | 2,3,WOOD | 1,CONC | 2,CONC | 2,3,WOOD | 1,CONC | 2,CONC |
| 24.000 x 36.000 | C4 | C4 | C4 | 4 | 4 | 4 | 3 | 3 | 3 | C4 | C4 | C4 | 4 | 4 | 6 | 3 | 3 | 3 | C4 | C4 | C4 | 4 | 4 | 6 | 3 | 3 | 3 | C4 | C4 | C4 | 4 | 4 | 6 | 3 | 3 | 3 |
| 42.000 | C4 | C4 | C4 | 6 | 6 | 6 | 3 | 3 | 3 | C4 | C4 | C4 | 6 | 6 | 6 | 3 | 3 | 3 | C4 | C4 | C4 | 6 | 6 | 6 | 3 | 3 | 3 | C4 | C4 | C4 | 6 | 6 | 6 | 3 | 3 | 3 |
| 48.000 | C4 | C4 | C4 | 6 | 6 | 6 | 3 | 3 | 3 | C4 | C4 | C4 | 6 | 6 | 6 | 3 | 3 | 3 | C4 | C4 | C4 | 6 | 6 | 6 | 3 | 3 | 3 | C4 | C4 | C4 | 6 | 6 | 6 | 3 | 3 | 3 |
| 54.000 | C4 | C4 | C4 | 6 | 6 | 6 | 3 | 3 | 3 | C6 | C6 | C4 | 6 | 6 | 6 | 4 | 4 | 4 | C6 | C6 | C4 | 6 | 6 | 6 | 4 | 4 | 4 | C6 | C6 | C4 | 6 | 6 | 6 | 4 | 4 | 4 |
| 60.000 | C4 | C4 | C4 | 6 | 6 | 6 | 3 | 3 | 3 | C6 | C6 | C4 | 6 | 6 | 8 | 4 | 4 | 4 | C6 | C6 | C4 | 6 | 6 | 8 | 4 | 4 | 4 | C6 | C6 | C4 | 6 | 6 | 8 | 4 | 4 | 4 |
| 72.000 | NOT AVAILABLE | | | | | | | | | C6 | C6 | C6 | 8 | 8 | 8 | 5 | 5 | 4 | C6 | C6 | C6 | 8 | 8 | 8 | 4 | 5 | 4 | C6 | C6 | C6 | 8 | 8 | 8 | 5 | 5 | 5 |
| 80.000 | | | | | | | | | | C6 | C6 | C6 | 8 | 8 | 8 | 5 | 5 | 4 | C6 | C6 | C6 | 8 | 8 | 8 | 4 | 5 | 4 | C8 | C8 | C6 | 8 | 8 | 8 | 5 | 5 | 5 |
| 30.000 x 36.000 | C4 | C4 | C4 | 4 | 4 | 4 | 3 | 3 | 3 | C4 | C4 | C4 | 6 | 6 | 6 | 4 | 4 | 4 | C4 | C4 | C4 | 6 | 6 | 6 | 4 | 4 | 4 | C4 | C4 | C4 | 6 | 6 | 6 | 4 | 4 | 4 |
| 42.000 | C4 | C4 | C4 | 6 | 6 | 6 | 3 | 3 | 3 | C6 | C6 | C4 | 6 | 6 | 6 | 4 | 4 | 3 | C6 | C6 | C4 | 6 | 6 | 6 | 3 | 4 | 3 | C6 | C6 | C4 | 6 | 6 | 6 | 4 | 4 | 3 |
| 48.000 | C4 | C4 | C4 | 6 | 6 | 6 | 3 | 3 | 3 | C6 | C6 | C4 | 6 | 6 | 6 | 4 | 4 | 4 | C6 | C6 | C4 | 6 | 6 | 6 | 4 | 4 | 4 | C6 | C6 | C4 | 6 | 6 | 6 | 4 | 4 | 4 |
| 54.000 | C4 | C4 | C4 | 6 | 6 | 6 | 3 | 3 | 3 | C6 | C6 | C6 | 8 | 8 | 8 | 5 | 5 | 4 | C6 | C6 | C4 | 8 | 8 | 8 | 5 | 5 | 4 | C6 | C6 | C6 | 8 | 8 | 8 | 5 | 5 | 4 |
| 60.000 | C4 | C4 | C4 | 6 | 6 | 6 | 3 | 3 | 3 | C6 | C8 | C6 | 8 | 8 | 8 | 5 | 5 | 5 | C6 | C6 | C6 | 8 | 8 | 8 | 5 | 5 | 5 | C6 | C8 | C6 | 8 | 8 | 8 | 5 | 5 | 5 |
| 72.000 | NOT AVAILABLE | | | | | | | | | C6 | C6 | C6 | 8 | 8 | 8 | 5 | 5 | 4 | C6 | C6 | C6 | 8 | 8 | 8 | 5 | 5 | 4 | C8 | C8 | C6 | 8 | 10 | 10 | 6 | 6 | 5 |
| 80.000 | | | | | | | | | | C6 | C6 | C6 | 8 | 8 | 8 | 5 | 5 | 4 | C6 | C6 | C6 | 8 | 8 | 8 | 5 | 5 | 4 | C8 | C8 | C6 | 8 | 10 | 10 | 6 | 6 | 5 |
| 36.000 x 36.000 | C4 | C4 | C4 | 4 | 4 | 6 | 3 | 3 | 3 | C4 | C4 | C4 | 6 | 6 | 6 | 4 | 4 | 4 | C4 | C4 | C4 | 4 | 4 | 6 | 3 | 4 | 3 | C4 | C4 | C4 | 6 | 6 | 6 | 4 | 4 | 4 |
| 42.000 | C4 | C4 | C4 | 6 | 6 | 6 | 3 | 3 | 3 | C6 | C6 | C4 | 6 | 6 | 6 | 4 | 4 | 4 | C4 | C4 | C4 | 6 | 6 | 6 | 3 | 3 | 3 | C6 | C6 | C4 | 6 | 6 | 6 | 4 | 4 | 4 |
| 48.000 | C4 | C4 | C4 | 6 | 6 | 6 | 3 | 3 | 3 | C6 | C6 | C4 | 6 | 6 | 8 | 4 | 4 | 4 | C4 | C4 | C4 | 6 | 6 | 6 | 3 | 4 | 3 | C6 | C6 | C4 | 6 | 6 | 8 | 4 | 4 | 4 |
| 54.000 | C4 | C4 | C4 | 6 | 6 | 6 | 3 | 3 | 3 | C6 | C6 | C6 | 8 | 8 | 8 | 5 | 5 | 5 | C6 | C6 | C4 | 6 | 6 | 6 | 4 | 4 | 4 | C6 | C6 | C6 | 8 | 8 | 8 | 5 | 5 | 5 |
| 60.000 | C4 | C4 | C4 | 6 | 6 | 6 | 3 | 3 | 3 | C8 | C8 | C6 | 8 | 8 | 8 | 5 | 5 | 5 | C6 | C6 | C4 | 6 | 6 | 8 | 4 | 5 | 4 | C8 | C8 | C6 | 8 | 8 | 8 | 5 | 5 | 5 |
| 72.000 | NOT AVAILABLE | | | | | | | | | C6 | C8 | C6 | 8 | 8 | 8 | 5 | 5 | 5 | C6 | C6 | C6 | 8 | 8 | 8 | 5 | 5 | 5 | C8 | C8 | C6 | 10 | 10 | 10 | 6 | 6 | 6 |
| 80.000 | | | | | | | | | | C6 | C6 | C6 | 8 | 8 | 8 | 5 | 5 | 5 | C6 | C6 | C6 | 8 | 8 | 8 | 5 | 5 | 5 | C8 | C8 | C6 | 10 | 10 | 10 | 6 | 6 | 5 |
| 42.000 x 36.000 | C2 | C2 | C2 | 4 | 6 | 6 | 4 | 4 | 3 | C2 | C2 | C2 | 6 | 6 | 6 | 4 | 4 | 4 | C2 | C2 | C2 | 4 | 4 | 4 | 3 | 3 | 3 | C2 | C2 | C2 | 6 | 6 | 6 | 4 | 4 | 4 |
| 42.000 | C2 | C2 | C2 | 6 | 6 | 6 | 3 | 3 | 3 | C2 | C2 | C2 | 6 | 6 | 6 | 3 | 3 | 3 | C2 | C2 | C2 | 6 | 6 | 6 | 3 | 3 | 3 | C2 | C2 | C2 | 6 | 6 | 6 | 3 | 3 | 3 |
| 48.000 | C2 | C2 | C2 | 6 | 6 | 6 | 3 | 3 | 3 | C4 | C4 | C2 | 6 | 6 | 6 | 4 | 4 | 4 | C2 | C2 | C2 | 6 | 6 | 6 | 3 | 3 | 3 | C4 | C4 | C2 | 6 | 6 | 6 | 4 | 4 | 4 |
| 54.000 | C2 | C2 | C2 | 6 | 6 | 6 | 3 | 3 | 3 | C4 | C4 | C4 | 6 | 6 | 8 | 4 | 4 | 4 | C4 | C4 | C2 | 6 | 6 | 6 | 3 | 4 | 3 | C4 | C4 | C4 | 6 | 6 | 8 | 4 | 4 | 4 |
| 60.000 | C4 | C4 | C2 | 6 | 6 | 6 | 3 | 3 | 3 | C4 | C4 | C4 | 8 | 8 | 8 | 5 | 5 | 5 | C4 | C4 | C4 | 6 | 6 | 6 | 4 | 4 | 4 | C4 | C4 | C4 | 8 | 8 | 8 | 5 | 5 | 5 |
| 72.000 | NOT AVAILABLE | | | | | | | | | C6 | C6 | C4 | 8 | 8 | 8 | 5 | 5 | 5 | C4 | C4 | C4 | 8 | 8 | 8 | 4 | 4 | 4 | C6 | C6 | C4 | 8 | 8 | 8 | 5 | 5 | 5 |
| 80.000 | | | | | | | | | | C6 | C6 | C4 | 8 | 8 | 8 | 5 | 5 | 5 | C6 | C6 | C4 | 8 | 8 | 8 | 5 | 5 | 4 | C6 | C6 | C6 | 10 | 10 | 10 | 6 | 6 | 5 |
| 48.000 x 36.000 | C2 | C2 | C2 | 4 | 4 | 6 | 3 | 4 | 3 | C2 | C2 | C2 | 6 | 6 | 6 | 4 | 4 | 3 | C2 | C2 | C2 | 4 | 4 | 4 | 3 | 3 | 2 | C2 | C2 | C2 | 6 | 6 | 6 | 4 | 4 | 3 |
| 42.000 | C2 | C2 | C2 | 6 | 6 | 6 | 3 | 3 | 3 | C2 | C2 | C2 | 6 | 6 | 6 | 3 | 3 | 3 | C2 | C2 | C2 | 6 | 6 | 6 | 3 | 3 | 3 | C2 | C2 | C2 | 6 | 6 | 6 | 3 | 3 | 3 |
| 48.000 | C2 | C2 | C2 | 6 | 6 | 6 | 3 | 3 | 3 | C2 | C2 | C2 | 6 | 6 | 6 | 3 | 3 | 3 | C2 | C2 | C2 | 6 | 6 | 6 | 3 | 3 | 3 | C2 | C2 | C2 | 6 | 6 | 6 | 3 | 3 | 3 |
| 54.000 | C2 | C2 | C2 | 6 | 6 | 6 | 3 | 3 | 3 | C4 | C4 | C2 | 6 | 6 | 6 | 4 | 4 | 4 | C2 | C2 | C2 | 6 | 6 | 6 | 3 | 3 | 3 | C4 | C4 | C2 | 6 | 6 | 6 | 4 | 4 | 4 |
| 60.000 | C4 | C4 | C2 | 6 | 6 | 6 | 3 | 3 | 3 | C4 | C4 | C4 | 6 | 6 | 8 | 4 | 4 | 4 | C4 | C4 | C2 | 6 | 6 | 6 | 3 | 4 | 3 | C4 | C4 | C4 | 6 | 6 | 8 | 4 | 4 | 4 |
| 72.000 | NOT AVAILABLE | | | | | | | | | C4 | C4 | C4 | 8 | 8 | 8 | 5 | 5 | 5 | C4 | C4 | C4 | 8 | 8 | 8 | 4 | 4 | 4 | C4 | C4 | C4 | 8 | 8 | 8 | 5 | 5 | 5 |
| 80.000 | | | | | | | | | | C6 | C6 | C4 | 8 | 8 | 8 | 5 | 5 | 5 | C4 | C4 | C4 | 8 | 8 | 8 | 4 | 4 | 4 | C6 | C6 | C4 | 8 | 8 | 8 | 5 | 5 | 5 |

SEE EXAMPLE ANCHOR LAYOUT ON SHEET 15

TABLE KEYS:

1. ANCHOR TYPES:
   1 - 1/4" ELCO TAPCON
   2 - 1/4" ELCO SS4 CRETE-FLEX
   3 - #12 STEEL SCREW (G5)
2. GLASS TYPES:
   A - 3/16" ANNEALED
   B - 3/16" TEMPERED
   C - 1/4" TEMPERED
   D - 5/8" TEMPERED I.G.
3. INTERLOCK AND REINFORCEMENT KEY:

SSN - SINGLE/SINGLE WITH NO REINFORCEMENT.

SSR - SINGLE/SINGLE WITH FULL REINFORCEMENT.

SDR - SINGLE/DOUBLE WITH FULL REINFORCEMENT.

PRODUCT REVISED
as complying with the Florida Building Code
Acceptance No 11-1110.16
Expiration/Date 5/22/2013
By
Miami Dade Product Control

ANTHONY LYNN MILLER
LICENSE
No. 58705
10/29/11
STATE OF FLORIDA
PROFESSIONAL ENGINEER
A. LYNN MILLER, P.E.
P.E.# 58705

| Revsd By: | Date: | Revisions: | |
|---|---|---|---|
| F.K. | 9/27/07 | I | EXPAND ANCHOR TABLE TO INCLUDE JAMB & P-HOOK ANCHORS FOR EA. GLASS TYPE. ADJ. SELECT ANCHOR QUANT. ADD EXAMPLE |
| Revsd By: F.K. | Date: 10/22/07 | Revisions: J | NO CHANGES THIS SHEET |
| Revsd By: J.J. | Date: 10/14/11 | Revisions: K | NO CHANGE THIS SHEET |
| Drawn By: F.K. | Date: 09/08/04 | Checked By: J.J. | Date: 04/02/06 |

1070 TECHNOLOGY DRIVE
NOKOMIS, FL 34275

P.O. BOX 1529
NOKOMIS, FL 34274

PGT
Visibly Better

Description: ANCHORAGE TABLE

Title: ALUM. SLIDING GLASS WINDOW, NON-IMPACT

| Series/Model: | Scale: | Sheet: | Drawing No. | Rev: |
|---|---|---|---|---|
| SGD2500 | NTS | 16 of 18 | 757-1 | K |

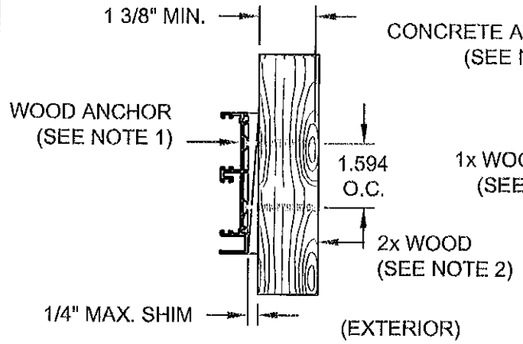


DETAIL - F

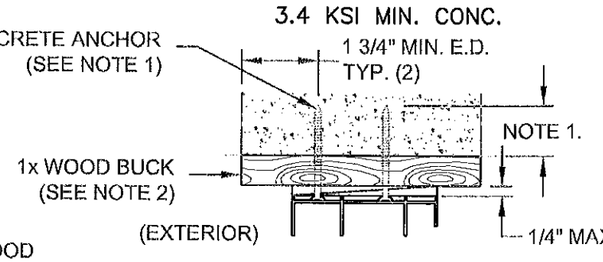


DETAIL - C

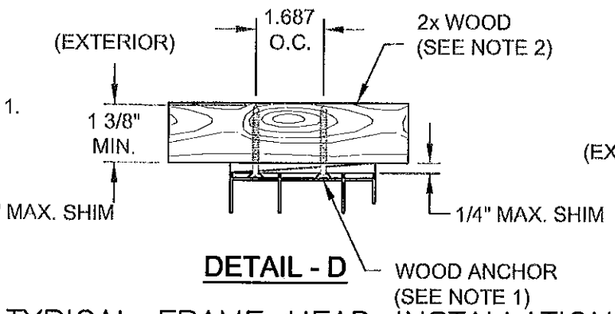


DETAIL - D

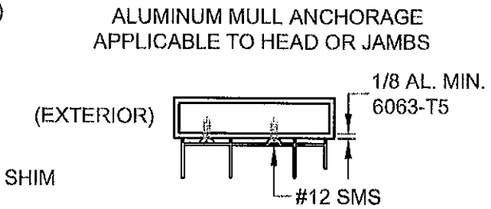


DETAIL - J

## TYPICAL FRAME HEAD INSTALLATIONS

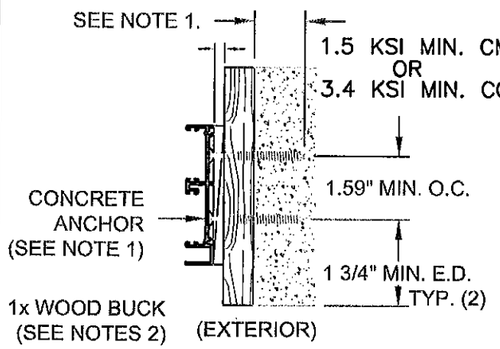


DETAIL - E

## TYPICAL FRAME JAMB INSTALLATIONS

## NOTES:

1. FOR CONCRETE INSTALLATIONS IN MIAMI-DADE COUNTY, USE ONLY MIAMI-DADE COUNTY APPROVED ELCO 1/4" TAPCONS EMBEDDED 1 3/8" MIN. OR 1/4" SS4 CRETE-FLEX EMBEDDED 1 3/4" MIN. THE MINIMUM DISTANCE FROM CENTER OF ANCHOR TO CONCRETE EDGE IS 1 3/4". FOR WOOD INSTALLATIONS USE #12 SCREWS OR ELCO 1/4" SS4 CRETE-FLEX ANCHORS EMBEDDED 1 3/8" MIN.
2. WOOD BUCKS DEPICTED IN THE SECTIONS ON THIS PAGE AS 1x ARE BUCKS WHOSE TOTAL THICKNESS IS LESS THAN 1 1/2". WOOD BUCKS DEPICTED AS 2x ARE 1 1/2" THICK OR GREATER. INSTALLATION TO THE SUBSTRATE OF WOOD BUCKS TO BE ENGINEERED BY OTHERS OR AS APPROVED BY AUTHORITY HAVING JURISDICTION.
3. FOR ATTACHMENT TO ALUMINUM: THE MATERIAL SHALL BE A MINIMUM STRENGTH OF 6063-T5 AND A MINIMUM OF 1/8" THICK. THE ALUMINUM STRUCTURAL MEMBER SHALL BE OF A SIZE TO PROVIDE FULL SUPPORT TO THE DOOR FRAME SIMILAR TO THAT SHOWN IN DETAILS B, D AND F ABOVE FOR 2x WOOD BUCKS. THE ANCHOR SHALL BE A #12 SHEET METAL SCREW WITH FULL ENGAGEMENT INTO THE ALUMINUM (SEE DETAIL J). IF THESE CRITERIA ARE MET THE PRESSURES AND ANCHORAGE SPACING FOR #12 SCREWS SHOWN IN THIS NOA MAY BE USED.
4. IF SILL IS TIGHT TO SUBSTRATE, GROUT OR OTHER MATERIAL IS NOT REQUIRED. IF USED, NON-SHRINK, NON-METALLIC GROUT (3350 PSI MIN.), (DONE BY OTHERS) MUST FULLY SUPPORT THE ENTIRE LENGTH OF THE SILL THAT IS NOT TIGHT TO THE SUBSTRATE, AND TRANSFER SHEAR LOAD TO SUBSTRATE. IF SUBSTRATE IS WOOD, 30# FELT PAPER OR MASTIC IS REQUIRED BETWEEN THE GROUT AND WOOD SUBSTRATE, OR AS APPROVED BY THE AUTHORITY HAVING JURISDICTION.

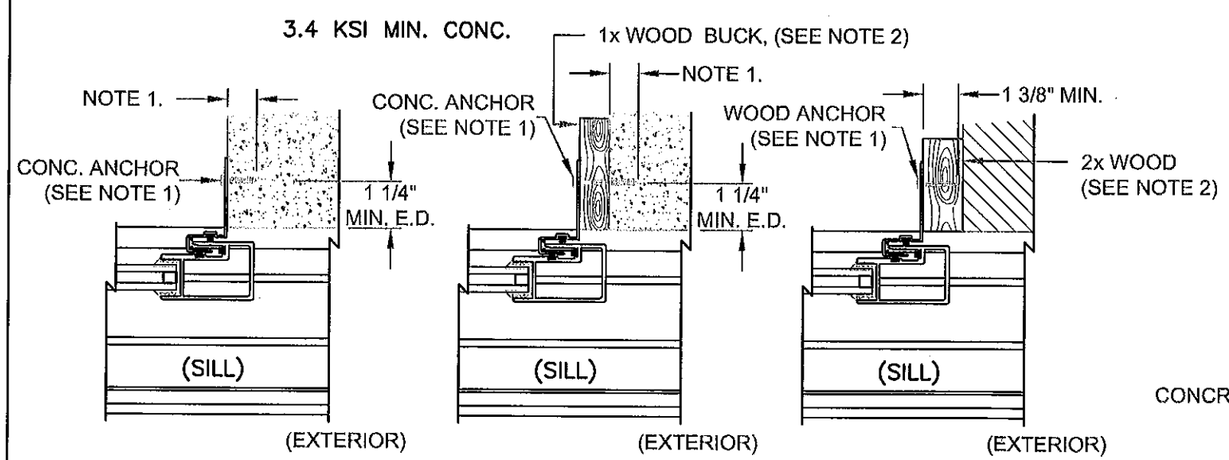


DETAIL - G DETAIL - H DETAIL - I

## TYPICAL POCKET P-HOOK INSTALLATIONS

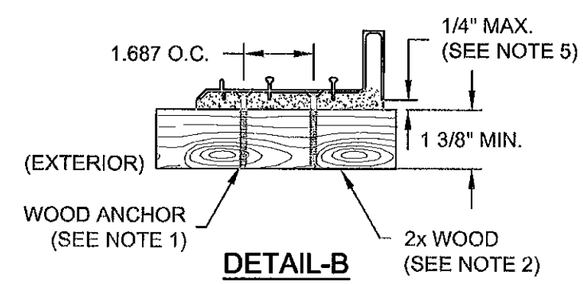


DETAIL-B

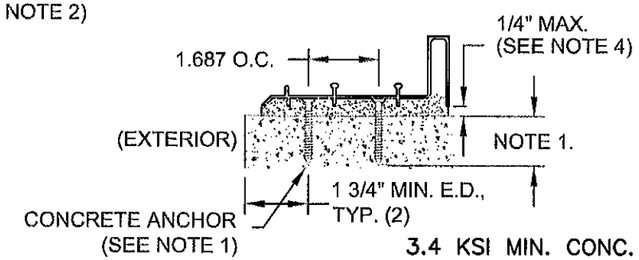


DETAIL-A

## TYPICAL FRAME SILL INSTALLATIONS

PRODUCT REVISED
as complying with the Florida
Building Code
Acceptance No 11-1110.16
Expiration Date 5/22/2013
By
Miami Dade Product Control

ANTHONY LYNN MILLER
LICENSE
No. 58705
STATE OF FLORIDA
PROFESSIONAL ENGINEER
A. LYNN MILLER, P.E.
P.E.# 58705

| Revsd By: | Date: | Revisions: | |
|---|---|---|---|
| F.K. | 9/27/07 | I | ADD MIN. O.C & E.D. DIM. ADD DETAIL J, ALUM. MULL ANCHORAGE AND ADD DETAIL J REFERENCE TO NOTE 3. |
| F.K. | 10/22/07 | J | NO CHANGES THIS SHEET |
| J.J. | 10/14/11 | K | NO CHANGE THIS SHEET |
| Drawn By: F.K. | Date: 09/08/04 | Checked By: J.J. | Date: 04/02/06 |

1070 TECHNOLOGY DRIVE
NOKOMIS, FL 34275

P.O. BOX 1529
NOKOMIS, FL 34274

PGT Visibly Better

Description: ANCHORAGE DETAILS

Title: ALUM. SLIDING GLASS WINDOW, NON-IMPACT

| Series/Model: | Scale: | Sheet: | Drawing No. | Rev: |
|---|---|---|---|---|
| SGD2500 | 1/4 | 17 of 18 | 757-1 | K |

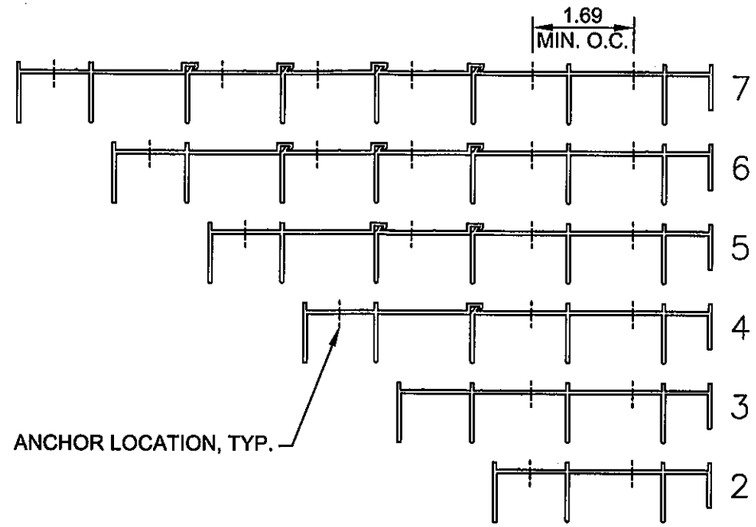


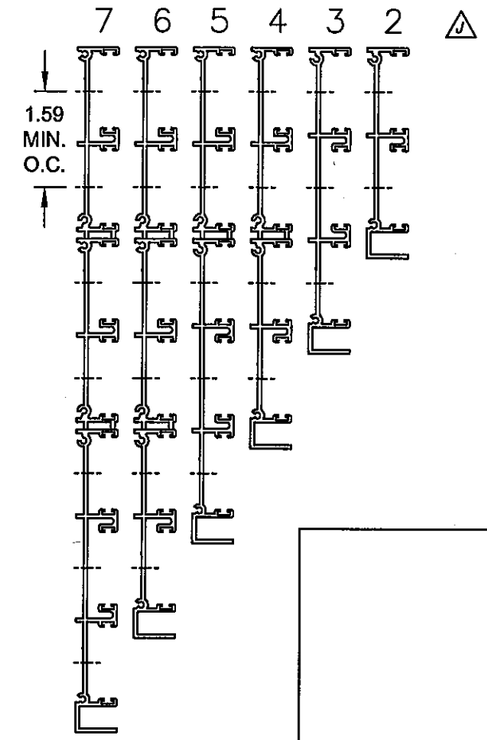


NOTES ON POTENTIAL ANCHOR LOCATIONS:

1. ANCHOR CLUSTER AND QUANTITY INFORMATION FROM TABLE 4, SHEET 16, APPLIES AS THE MINIMUM REQUIREMENT FOR ALL TRACK CONFIGURATIONS. ANCHORS MAY BE STAGGERED WITHIN TRACK SECTIONS EXCEPT THAT THE ASTRAGAL AND INTERLOCK CLUSTERS MUST BE LOCATED IN THE TRACK ON WHICH ASTRAGAL AND/OR INTERLOCKS ARE POSITIONED WHEN THE DOOR(S) ARE IN THE CLOSED AND LOCKED POSTION. MINIMUM ON-CENTER DIMENSIONS FOR ANCHORS ARE 1.69" AT HEAD AND SILL AND 1.59" FOR JAMBS.

2. EMBEDMENT AND EDGE DISTANCES SHOWN FOR 2 TRACK FRAMES ON SHEET 17 ARE ALSO APPLICABLE TO ALL MULTI-TRACK SECTIONS.

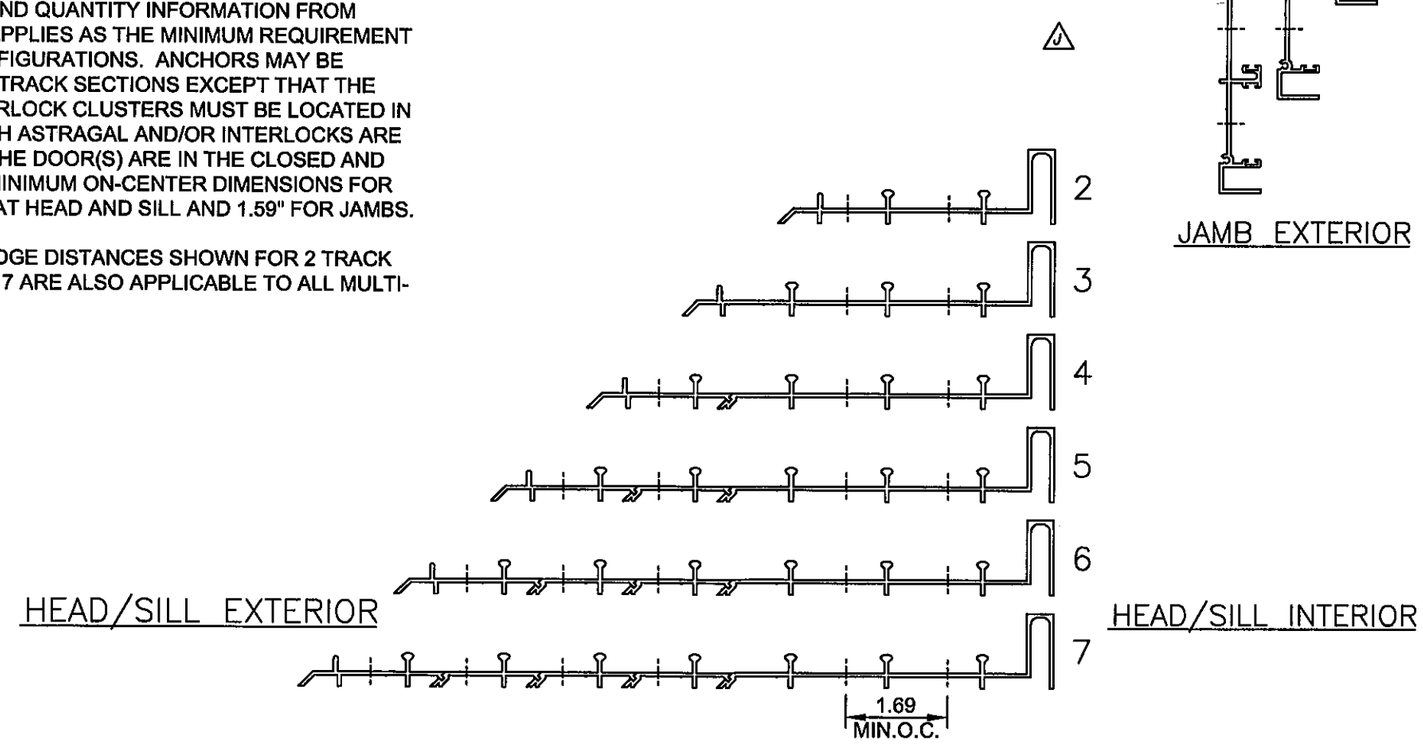


PRODUCT REVISED
as complying with the Florida
Building Code
Acceptance No 11-1110.16
Expiration Date 05/22/2013
By
Miami Dade Product Control

ANTHONY LYNN MILLER
LICENSE
No. 58705
10/29/11
STATE OF FLORIDA
PROFESSIONAL ENGINEER
A. LYNN MILLER, P.E.
P.E.# 58705

| Revsd By: | Date: | Revisions: | |
|---|---|---|---|
| F.K. | 9/27/07 | I | NEW SHEET TO ILLUSTRATE ALL TRACK ANCHOR LOCATIONS |
| F.K. | 10/22/07 | J | DELETE 1-TRACK HEAD, SILL & JAMB. |
| J.J. | 10/14/11 | K | NO CHANGE THIS SHEET |
| Drawn By: F.K. | Date: 09/08/04 | Checked By: J.J. | Date: 04/02/06 |

1070 TECHNOLOGY DRIVE
NOKOMIS, FL 34275

P.O. BOX 1529
NOKOMIS, FL 34274

PGT
Visibly Better

Description: FRAME, POTENTIAL ANCHOR LOCATIONS

Title: ALUM. SLIDING GLASS WINDOW, NON-IMPACT

| Series/Model: | Scale: | Sheet: | Drawing No. | Rev: |
|---|---|---|---|---|
| SGD2500 | 1/4 | 18 of 18 | 757-1 | K |