MIAMI-DADE COUNTY
DEPARTMENT OF PERMITTING, ENVIRONMENT, AND REGULATORY AFFAIRS (PERA)
BOARD AND CODE ADMINISTRATION DIVISION

MIAMI–DADE COUNTY, FLORIDA
PRODUCT CONTROL SECTION
11805 SW 26 Street, Room 208
Miami, Florida 33175–2474
T (786) 315–2590 F (786) 315–2599
www.miamidade.gov/pera/

NOTICE OF ACCEPTANCE (NOA)

PGT Industries
1070 Technology Drive
Nokomis, Fl 34275

SCOPE:

This NOA is being issued under the applicable rules and regulations governing the use of construction materials. The documentation submitted has been reviewed and accepted by Miami–Dade County PERA–Product Control Section to be used in Miami–Dade County and other areas where allowed by the Authority Having Jurisdiction (AHJ).

This NOA shall not be valid after the expiration date stated below. The Miami–Dade County Product Control Section (In Miami–Dade County) and/or the AHJ (in areas other than Miami–Dade County) reserve the right to have this product or material tested for quality assurance purposes. If this product or material fails to perform in the accepted manner, the manufacturer will incur the expense of such testing and the AHJ may immediately revoke, modify, or suspend the use of such product or material within their jurisdiction. PERA reserves the right to revoke this acceptance, if it is determined by Miami–Dade County Product Control Section that this product or material fails to meet the requirements of the applicable building code.

This product is approved as described herein, and has been designed to comply with the Florida Building Code, including the High Velocity Hurricane Zone.

DESCRIPTION: Series "CA–740" Aluminum Casement Window – L.M.I.

APPROVAL DOCUMENT: Drawing No. **7045–8**, titled "Aluminum Casement Windows, Impact", sheets 1 through 13 of 13, prepared by manufacturer, dated 12/17/02 with revision "**E**" dated 10/24/11, signed and sealed by Anthony Lynn Miller, P. E., bearing the Miami–Dade County Product Control Revision stamp with the Notice of Acceptance number and Expiration date by the Miami–Dade County Product Control Section.

MISSILE IMPACT RATING: Large Missile and Small Missile Impact Resistant.

LABELING: Each unit shall bear a permanent label with the manufacturer's name or logo, city, state, model/ series and following statement: "Miami–Dade County Product Control Approved" unless otherwise noted herein.

RENEWAL of this NOA shall be considered after a renewal application has been filed and there has been no change in the applicable building code negatively affecting the performance of this product.

TERMINATION of this NOA will occur after the expiration date or if there has been a revision or change in the materials, use, and/or manufacture of the product or process. Misuse of this NOA as an endorsement of any product, for sales, advertising or any other purposes shall automatically terminate this NOA. Failure to comply with any section of this NOA shall be cause for termination and removal of NOA.

ADVERTISEMENT: The NOA number preceded by the words Miami–Dade County, Florida, and followed by the expiration date may be displayed in advertising literature. If any portion of the NOA is displayed, then it shall be done in its entirety.

INSPECTION: A copy of this entire NOA shall be provided to the user by the manufacturer or its distributors and shall be available for inspection at the job site at the request of the Building Official.

This NOA **revises NOA No. 08–0117.11** and consists of this page 1, evidence pages E–1 and E–2, as well as approval document mentioned above.

The submitted documentation was reviewed by **Jaime D. Gascon, P. E.**

MIAMI-DADE COUNTY APPROVED

J. Gascon
2/2/12

NOTICE OF ACCEPTANCE: EVIDENCE SUBMITTED

A. DRAWINGS

1. Manufacturer's die drawings and sections.
   (Submitted under previous NOA No. 05–1129.11 and 03–0611.02)
2. Drawing No. **7045–8**, titled "Aluminum Casement Windows, Impact", sheets 1 through 13 of 13, prepared by manufacturer, dated 12/17/02 with revision "**E**" dated 10/24/11, signed and sealed by Anthony Lynn Miller, P. E.

B. TESTS

1. Test reports on:
   1) Air Infiltration Test, per FBC, TAS 202–94
   2) Uniform Static Air Pressure Test, Loading per FBC, TAS 202–94
   3) Water Resistance Test, per FBC, TAS 202–94
   4) Large Missile Impact Test, per FBC, TAS 201–94
   5) Cyclic Wind Pressure Loading, per FBC, TAS 203–94
   6) Forced Entry Test, per FBC 2411 3.2.1 and TAS 202–94
2. along with marked–up drawings and installation diagram of outswing aluminum casement window, prepared by Fenestration Testing Laboratory, Inc., Test Reports No.'s **FTL–4607** and **FTL–4608**, dated 05/10/05, both signed and sealed by Edmundo Largaespada, P. E.
   (Submitted under previous NOA No. 05–1129.11)
3. Test reports on:
   1) Air Infiltration Test, per FBC, TAS 202–94
   2) Uniform Static Air Pressure Test, Loading per FBC, TAS 202–94
   3) Water Resistance Test, per FBC, TAS 202–94
   4) Large Missile Impact Test, per FBC, TAS 201–94
   5) Cyclic Wind Pressure Loading, per FBC, TAS 203–94
   6) Forced Entry Test, per FBC 2411 3.2.1 and TAS 202–94

   along with marked–up drawings and installation diagram of outswing aluminum casement window, prepared by Fenestration Testing Laboratory, Inc., Test Reports No.'s **FTL–3729**, **FTL–3587**, **FTL–3582** and **FTL–3580**, dated 02/28/03 and 10/03/02, all signed and sealed by Joseph C. Chan, P. E.
   (Submitted under previous NOA No. 03–0611.02)

C. CALCULATIONS

1. Revised anchor verification calculations and structural analysis, dated 11/21/05 complying with FBC, prepared by manufacture, signed and sealed by Lucas A. Turner, P. E.
   (Submitted under previous NOA No. 08–0117.11)
2. **Glazing complies with ASTM E1300–98/ 04**

D. QUALITY ASSURANCE

1. Miami–Dade Department of Permitting, Environment, and Regulatory Affairs (PERA)

Jaime D. Gascon, P. E.
Product Control Section Supervisor
NOA No. 11–1110.18
Expiration Date: May 22, 2013
Approval Date: February 09, 2012

NOTICE OF ACCEPTANCE: EVIDENCE SUBMITTED

E. MATERIAL CERTIFICATIONS

1. Notice of Acceptance No. **11–0624.01** issued to **E.I. DuPont DeNemours & Co.**, Inc. for their **"DuPont Butacite® PVB Interlayer"** dated 09/08/11, expiring on 12/11/16.
2. Notice of Acceptance No. **11–0325.05** issued to **Solutia, Inc.** for their **"Saflex – Clear or colored Interlayer"** dated 04/21/11, expiring on 04/21/16.

F. STATEMENTS

1. Statement letter of conformance and compliance with the FBC–2007 (with the 2009 supplement) and FBC–2010, dated 10/29/11, signed and sealed by Anthony Lynn Miller, P. E.
2. Statement letter of no financial interest and independence, dated 10/29/11, signed and sealed by Anthony Lynn Miller, P. E.
3. Letter of *Adoption of as his Own, the Work of another Engineer* per Section 61G15–27.001 of the F.B.P.E., dated 10/07/11 signed and sealed by Anthony Lynn Miller, P. E.
4. Statement letter of no financial interest, independence, conformance and compliance with the Florida Building Code, dated 01/11/08, signed and sealed by Robert L. Clark, P. E.
   (Submitted under previous NOA No. 08–0117.11)
5. Laboratory compliance letters for Test Reports No.'s **FTL–4607** and **FTL–4608**, issued by Fenestration Testing Laboratory, Inc., dated 05/10/05, both signed and sealed by Edmundo Largaespada, P. E.
   (Submitted under previous NOA No. 05–1129.11)
6. Laboratory compliance letters for Test Reports No.'s **FTL–3729**, **FTL–3587**, **FTL–3582** and **FTL–3580**, issued by Fenestration Testing Laboratory, Inc., dated 02/28/03 and 10/03/02, all signed and sealed by Joseph C. Chan, P. E.
   (Submitted under previous NOA No. 03–0611.02)

G. OTHERS

1. Notice of Acceptance No. **08–0117.11**, issued to PGT Industries for their Series "CA–740 Aluminum Casement Window – L.M.I." approved on 05/15/08 and expiring on 05/22/13.

Jaime D. Gascon, P. E.
Product Control Section Supervisor
NOA No. 11–1110.18
Expiration Date: May 22, 2013
Approval Date: February 09, 2012

NOTES: LARGE MISSILE WINDOWS

1. GLAZING OPTIONS:
   A. 5/16" LAMINATED GLASS COMPRISED OF (1) LITE OF 1/8" ANNEALED GLASS AND (1) LITE OF 1/8" HEAT STRENGTHENED GLASS W/ AN .090 INTERLAYER OF SOLUTIA OR DUPONT PVB.
   B. 5/16" LAMINATED GLASS COMPRISED OF (2) LITES OF 1/8" HEAT STRENGTHENED GLASS W/ AN .090 INTERLAYER OF SOLUTIA OR DUPONT PVB.
   C. 7/16" LAMINATED GLASS COMPRISED OF (1) LITE OF 3/16" ANNEALED GLASS AND (1) LITE OF 3/16" HEAT STRENGTHENED GLASS W/ AN .090 INTERLAYER OF SOLUTIA OR DUPONT PVB.
   D. 7/16" LAMINATED GLASS COMPRISED OF (2) LITES OF 3/16" HEAT STRENGTHENED GLASS W/ AN .090 INTERLAYER OF SOLUTIA OR DUPONT PVB.
   E. 13/16" I.G. GLASS COMPRISED OF (1) LITE OF 1/8" HEAT STRENGTHENED GLASS AND (1) 5/16" LAMINATED COMPONENT WITH A 3/8" AIR SPACE. 5/16" LAMINATED GLASS COMPRISED OF (2) LITES OF 1/8" HEAT STRENGTHENED GLASS WITH AN .090 SOLUTIA OR DUPONT PVB INTERLAYER.
   △D F. 13/16" I.G. GLASS COMPRISED OF (1) LITE OF 1/8" ANNEALED GLASS AND (1) 7/16" LAMINATED COMPONENT WITH AN AIR SPACE. 7/16" LAMINATED GLASS COMPRISED OF (1) LITE OF 3/16" ANNEALED GLASS AND (1) LITE OF 3/16" HEAT STRENGTHENED GLASS WITH AN .090 SOLUTIA OR DUPONT PVB INTERLAYER.
   △D G. 13/16" I.G. GLASS COMPRISED OF (1) LITE OF 1/8" ANNEALED GLASS AND (1) 7/16" LAMINATED COMPONENT WITH AN AIR SPACE. 7/16" LAMINATED GLASS COMPRISED OF (2) LITES OF 3/16" HEAT STRENGTHENED GLASS WITH AN .090 SOLUTIA OR DUPONT PVB INTERLAYER.

IN MIAMI-DADE COUNTY OPTIONS E, F, AND G WHEN INSTALLED OVER 30' THE OUTBOARD LITE OF GLASS MUST BE UPGRADED TO TEMPERED. △E

2. CONFIGURATIONS: X, XX, XO, OX, XOX AND O

3. DESIGN PRESSURE RATINGS / COMPARATIVE ANALYSIS TABLES: △D
   A. NEGATIVE DESIGN LOADS BASED ON TESTED PRESSURE AND GLASS TABLES ASTM E 1300-98.
   B. POSITIVE DESIGN LOADS BASED ON WATER TEST PRESSURE AND GLASS TABLES ASTM E 1300-98.
   C. DESIGN PRESSURES UNDER 40 P.S.F. NOT APPLICABLE IN MIAMI-DADE COUNTY.
   D. FOR "X" CONFIGURATIONS SEE SHEET 5.
   E. FOR "XX" CONFIGURATIONS SEE SHEET 6.
   F. FOR $\frac{1}{4}\frac{1}{2}\frac{1}{4}$ "XOX" & "O" CONFIGURATIONS SEE SHEET 7.
   G. FOR $\frac{1}{3}\frac{1}{3}\frac{1}{3}$ "XOX" & "XO" OR "OX" CONFIGURATIONS SEE SHEET 8.
   H. FOR UNEQUAL LITE "XOX, "XO" & "OX" CONFIGURATIONS SEE SHEET 9.

△D 4. ANCHORAGE: THE 33 1/3% STRESS INCREASE HAS NOT BEEN USED IN THE DESIGN OF THIS PRODUCT. SEE SHEETS 3, 4 AND 13 FOR ADDITIONAL ANCHORAGE INFORMATION.

HEAD & SILL: MAX. 4" FROM CORNERS
MAX. 4" & 7" ON EACH SIDE OF MEETING RAILS
MAX. 14 1/2" SPACING ON VENTS
MAX. 13" SPACING ON FIXED LITES
(2) ANCHORS 3" APART AT MID-SPAN ON FIXED LITE ONLY

JAMBS: MAX. 4" FROM CORNERS
MAX. 13" SPACING
(2) ANCHORS 3" APART AT MID-SPAN

△D SEE SHEET 13 FOR APPROVED ANCHORS. 1/4" TAPCONS OR 1/4" SS4 CRETE-FLEX MAY BE USED IN CONCRETE OR WOOD APPLICATIONS TO ACHIEVE THE DESIGN PRESSURES SHOWN IN SHEETS 5 THROUGH 9. SEE SHEETS 5 THROUGH 9 FOR DESIGN PRESSURE LIMITATIONS WHEN ANCHORING WITH #12 SCREWS.

5. SHUTTER REQUIREMENT: NONE REQUIRED
6. NARROW JOINT SEALANT IS USED ON ALL FOUR CORNERS OF THE FRAME.
△D 7. REFERENCE TEST REPORTS: FTL-3580, FTL-3582, FTL-3587, FTL-3729, FTL4607 AND FTL-4608.
8. THIS PRODUCT HAS BEEN DESIGNED AND TESTED TO COMPLY WITH THE REQUIREMENTS OF THE FLORIDA BUILDING CODE, INCLUDING THE HIGH VELOCITY HURRICANE ZONE (HVHZ).

CONFIGURATIONS OPTIONS

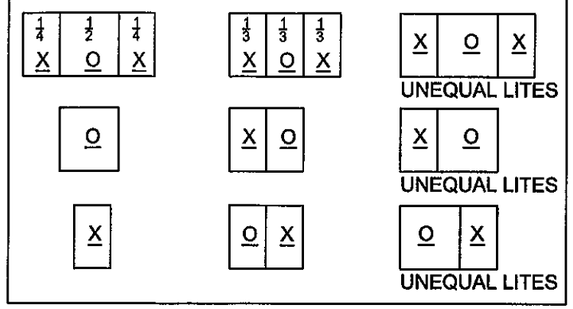

NOA DRAWING TABLE OF CONTENTS

	SHEET
NOTES	1
GLAZING DETAILS	2
ELEVATIONS	3-4
DESIGN PRESSURE TABLES	5-9
SECTIONS	10
CORNER CONSTRUCTION	11
EXTRUSION PROFILES	11-12
PARTS LIST	12
ANCHORAGE	1,3,4,13

PRODUCT REVISED
as complying with the Florida Building Code
Acceptance No 11-1110.18
Expiration Date 05/22/2013
By
Miami Dade Product Control

ANTHONY LYNN MILLER
LICENSE
No. 58705
10/29/11
STATE OF FLORIDA
PROFESSIONAL ENGINEER
A. Lynn Miller, P.E.
P.E.# 58705

Revsd By:	Date:	Revisions:	
F.K.	7/10/03	C	NO CHANGE THIS SHEET
F.K.	6/23/05	D	ADD 76" HT., GLASS TYPES F AND G. REVISE ANCHORAGE.
J.J.	10/24/11	E	FBC 2010 CODE CHANGE & 30' RULE
Drawn By: F.K.	Date: 12/17/02	Checked By:	Date:

1070 TECHNOLOGY DRIVE
NOKOMIS, FL 34275
P.O. BOX 1529
NOKOMIS, FL 34274

PGT Visibly Better

Description: NOTES AND TABLE OF CONTENTS
Title: ALUMINUM CASEMENT WINDOW, IMPACT

Series/Model:	Scale:	Sheet:	Drawing No.	Rev:
CA-740	NTS	1 of 13	7045-8	E

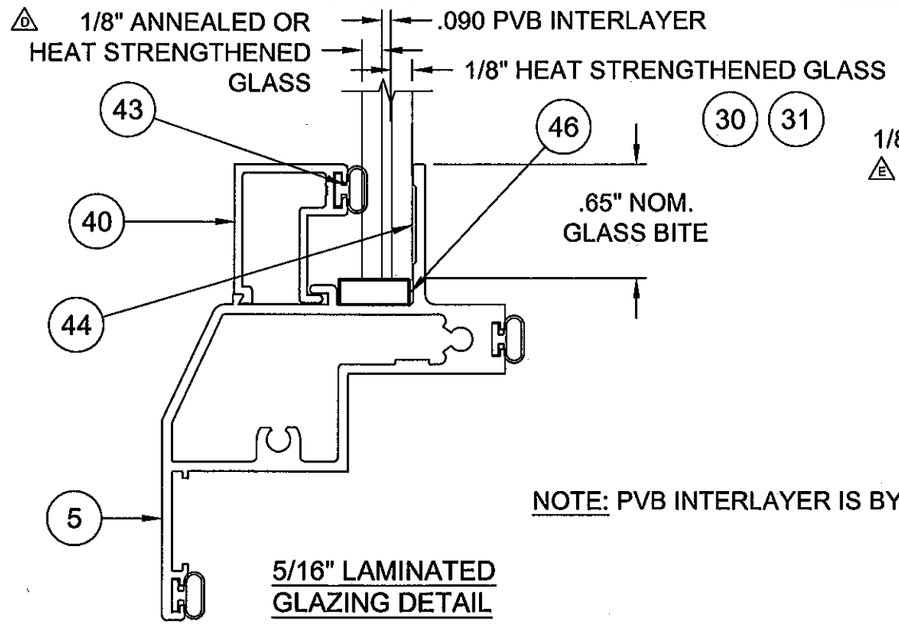

5/16" LAMINATED GLAZING DETAIL

NOTE: PVB INTERLAYER IS BY SOLUTIA OR DUPONT

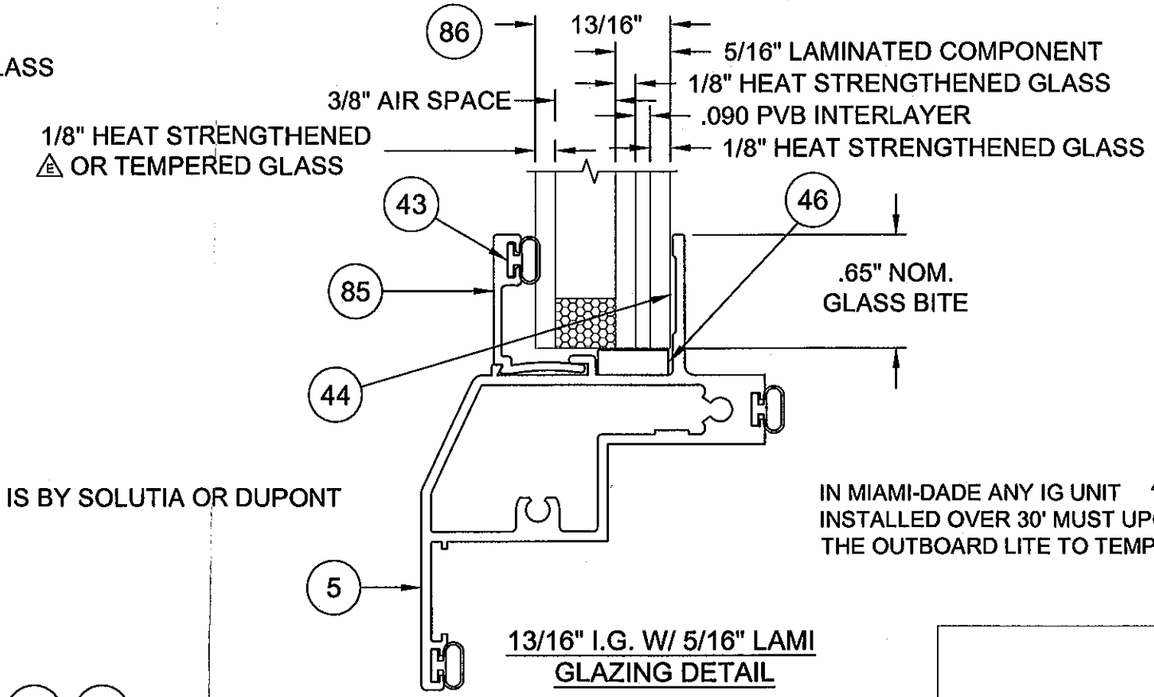

13/16" I.G. W/ 5/16" LAMI GLAZING DETAIL

IN MIAMI-DADE ANY IG UNIT INSTALLED OVER 30' MUST UPGRADE THE OUTBOARD LITE TO TEMPERED.

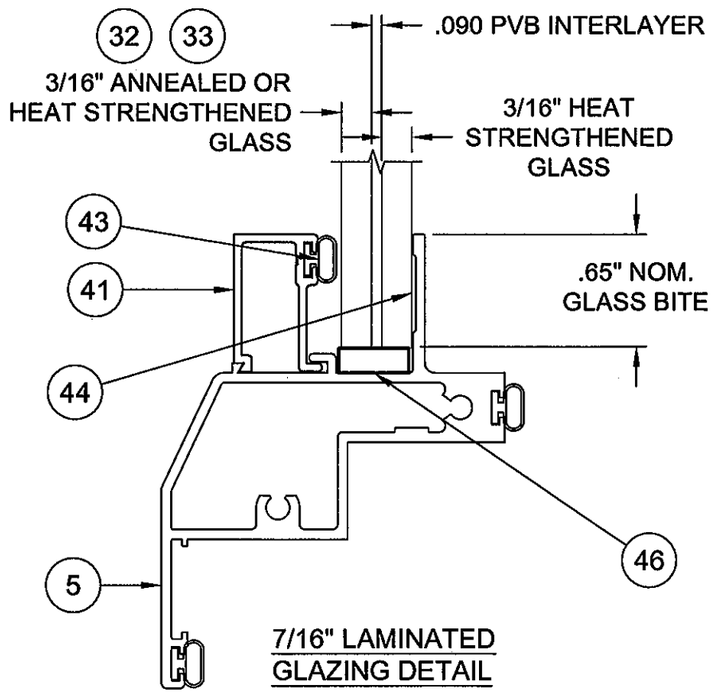

7/16" LAMINATED GLAZING DETAIL

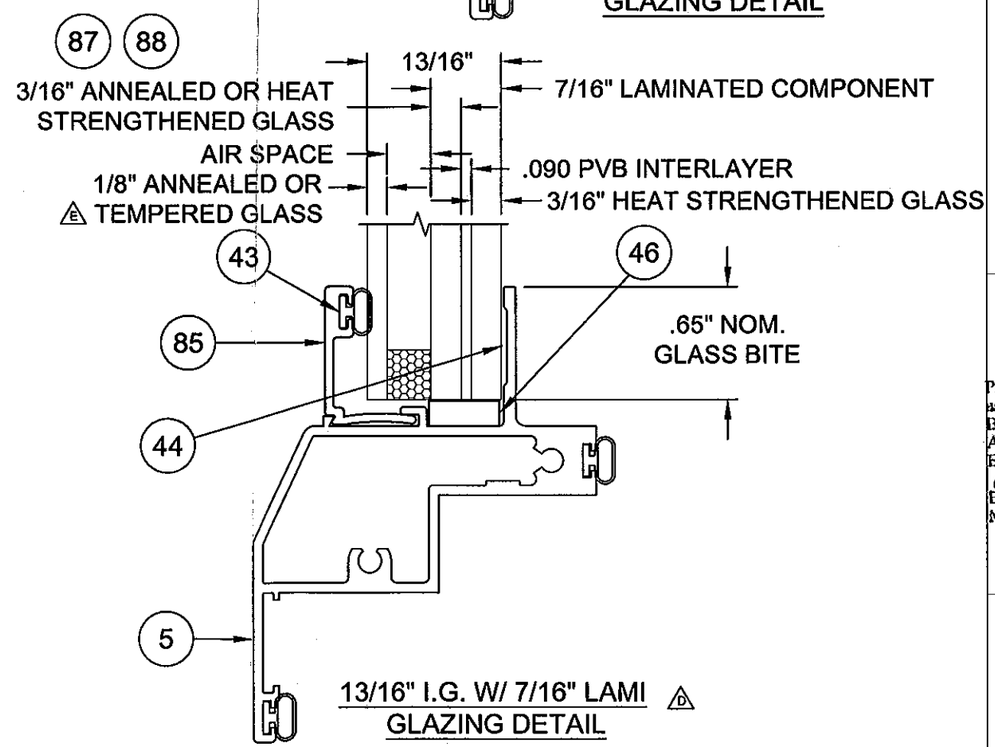

13/16" I.G. W/ 7/16" LAMI GLAZING DETAIL

PRODUCT REVISED
as complying with the Florida
Building Code
Acceptance No 11-1110.18
Expiration Date 05/22/2013
By
Miami Dade Product Control

ANTHONY LYNN MILLER
LICENSE
No. 58705
10/29/11
STATE OF FLORIDA
PROFESSIONAL ENGINEER
A. Lynn Miller, P.E.
P.E.# 58705

Revsd By:	Date:	Revisions:	
F.K.	7/10/03	C	NO CHANGE THIS SHEET
F.K.	6/23/05	D	ADD 13/16" LAMI I.G. W/ 7/16"LAMI & CORRECT 5/16" LAMI DETAIL
J.J.	10/24/11	E	30' RULE
Drawn By: F.K.	Date: 03/25/03	Checked By:	Date:

1070 TECHNOLOGY DRIVE
NOKOMIS, FL 34275

P.O. BOX 1529
NOKOMIS, FL 34274

PGT Visibly Better

Description: GLAZING DETAILS

Title: ALUMINUM CASEMENT WINDOW, IMPACT

Series/Model:	Scale:	Sheet:	Drawing No.	Rev:
CA-745	NTS	2 of 13	7045-8	E

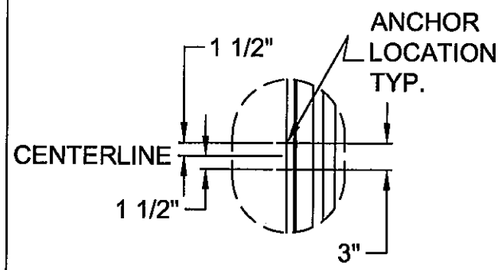

MID-SPAN ANCHOR DETAIL
(SEE SHT. 1 NOTE 4)

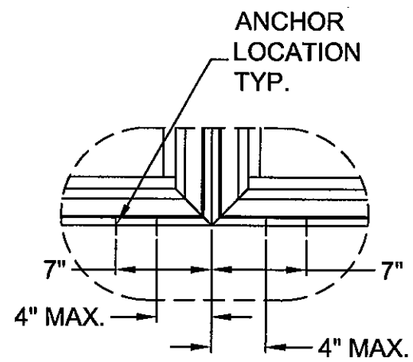

MEETING RAIL DETAIL
(SEE SHT. 1 NOTE 4)

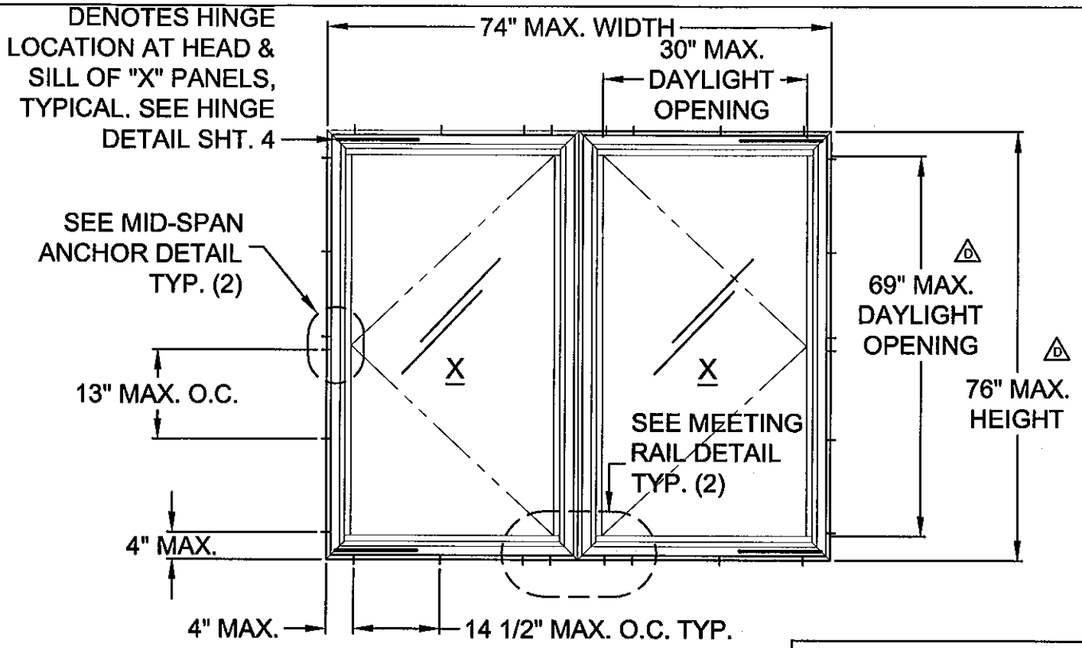

ELEVATION "B" - "XX"
(SEE SHEET 7 FOR PRESSURES)

NOTE: "X" PANEL MAY SWING IN EITHER DIRECTION

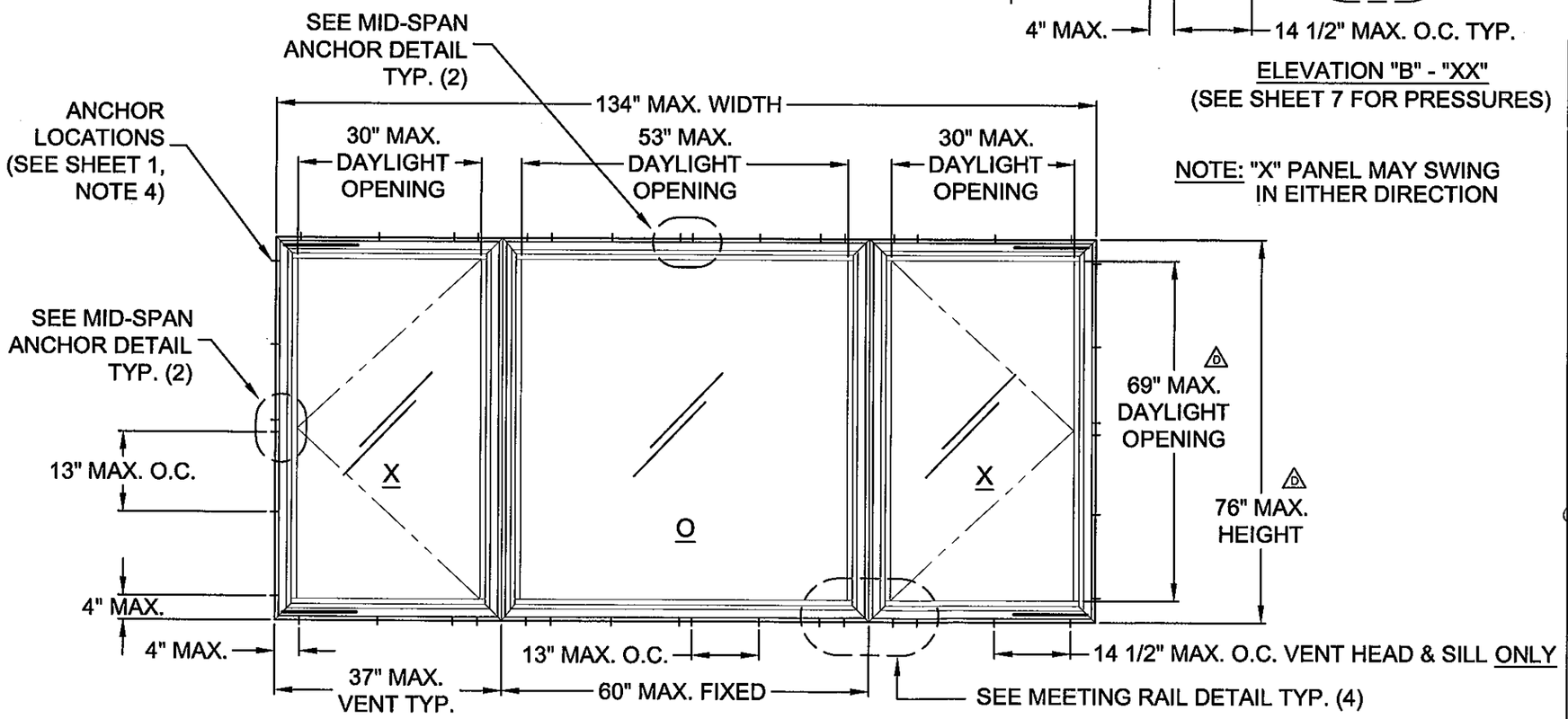

ELEVATION "A" - "XOX" (SEE SHEETS 7-9 FOR PRESSURES)

PRODUCT REVISED
as complying with the Florida
Building Code
Acceptance No 11-1110.18
Expiration Date 05/22/2013
By
Miami Dade Product Control

ANTHONY LYNN MILLER
LICENSE
No. 58705
10/29/11
STATE OF FLORIDA
PROFESSIONAL ENGINEER
A. Lynn Miller, P.E.
P.E.# 58705

Revsd By:	Date:	Revisions:	
F.K.	7/10/03	C	ADD HINGE LOCATION DETAILS
F.K.	6/23/05	D	CHANGE MAX. HT. TO 76" AND MAX. DLO TO 69"
J.J.	10/24/11	E	NO CHANGE THIS SHEET
Drawn By: F.K.	Date: 12/17/02	Checked By:	Date:

1070 TECHNOLOGY DRIVE
NOKOMIS, FL 34275

P.O. BOX 1529
NOKOMIS, FL 34274

PGT
Visibly Better

Description: "XX" & "XOX" ELEVATIONS

Title: ALUMINUM CASEMENT WINDOW, IMPACT

Series/Model:	Scale:	Sheet:	Drawing No.	Rev:
CA-740	NTS	3 of 13	7045-8	E

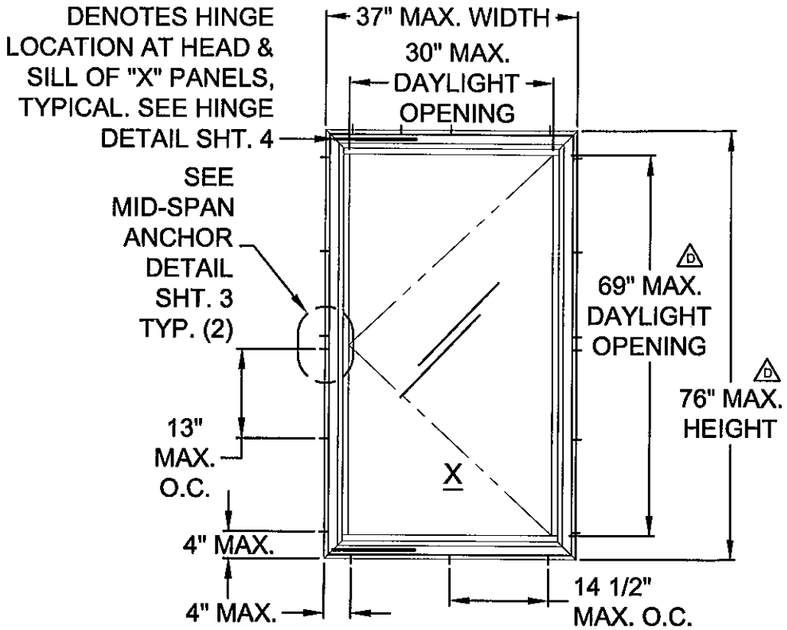

ELEVATION "D" - "X"
(SEE SHEET 5 FOR PRESSURES)

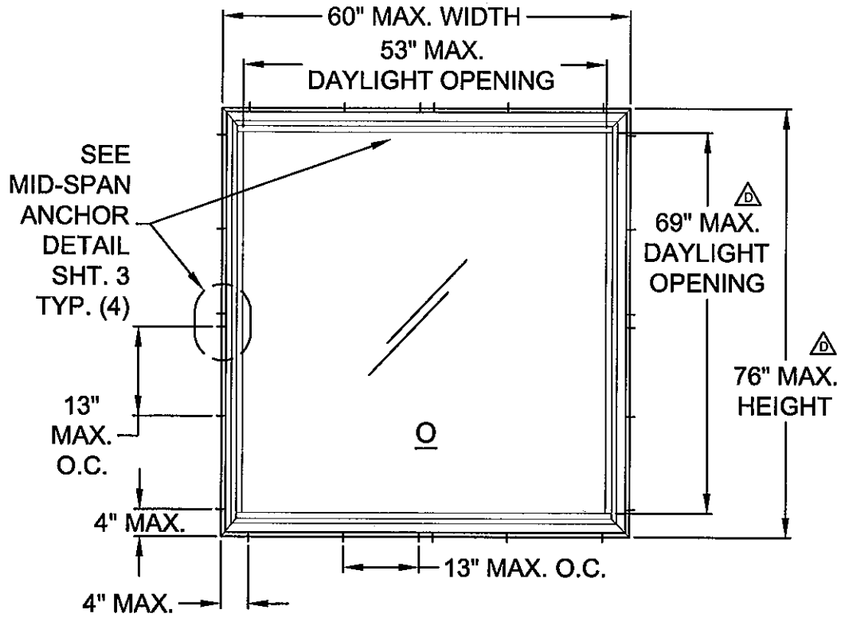

ELEVATION "E" - "O"
(SEE SHEET 7 FOR PRESSURES)

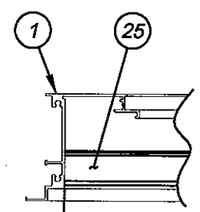

HINGE LOCATED APPROX. FLUSH AGAINST JAM, TYPICAL HEAD & SILL

HINGE LOCATION DETAIL

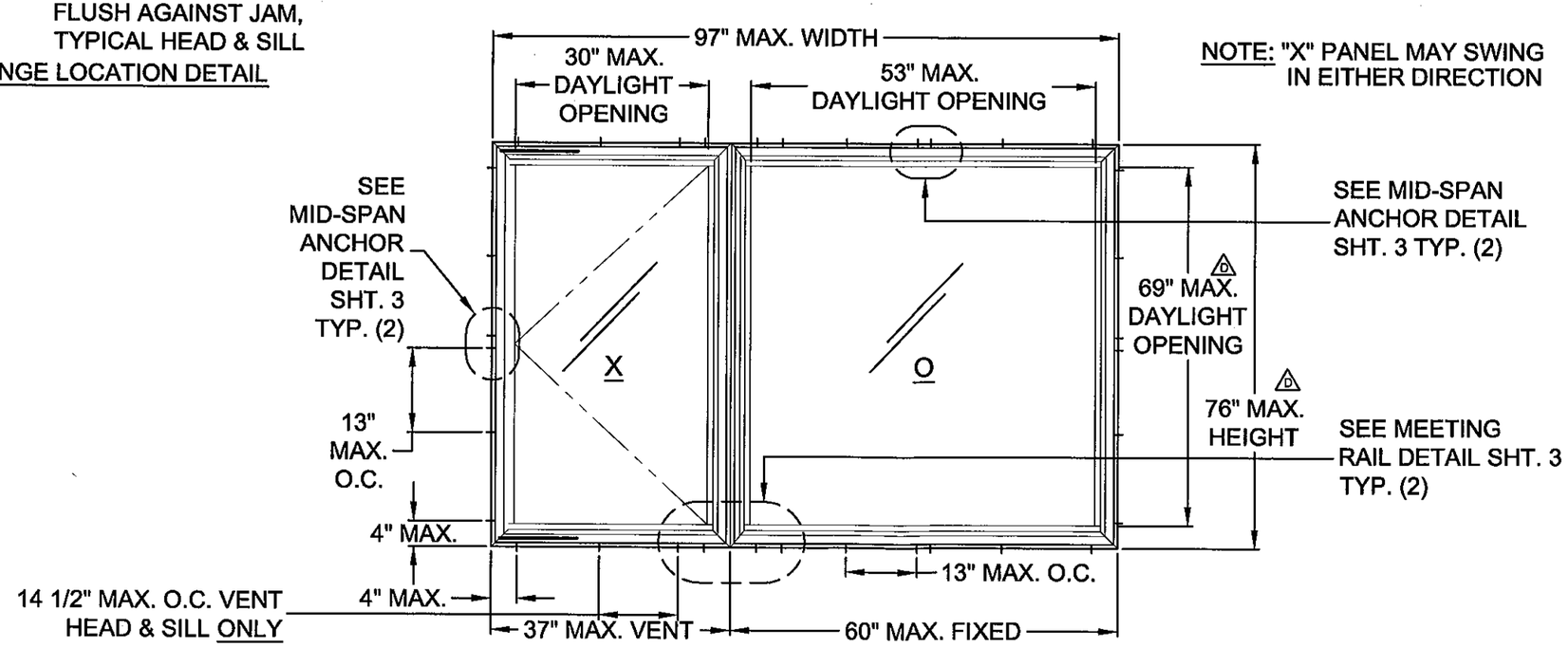

NOTE: "X" PANEL MAY SWING IN EITHER DIRECTION

ELEVATION "F" - "XO" & "OX" UNEQUAL LITE (SEE SHEETS 8-9 FOR PRESSURES)

PRODUCT REVISED
as complying with the Florida Building Code
Acceptance No. 11-1110.18
Expiration Date 05/22/2013
By
Miami Dade Product Control

ANTHONY LYNN MILLER
LICENSE
No. 58705
10/29/11
STATE OF FLORIDA
PROFESSIONAL ENGINEER
A. Lynn Miller, P.E.
P.E.# 58705

Revsd By:	Date:	Revisions:	
F.K.	6/23/05	C	ADD HINGE DETAIL & HINGE LOCATION NOTES
F.K.	7/10/03	D	CHANGE MAX. HT. TO 76" AND MAX. DLO TO 69"
J.J.	10/24/11	E	NO CHANGE THIS SHEET
Drawn By: F.K.	Date: 12/17/02	Checked By: F.K.	Date:

1070 TECHNOLOGY DRIVE
NOKOMIS, FL 34275
P.O. BOX 1529
NOKOMIS, FL 34274

PGT Visibly Better

Description: "X", "O", "XO" & "OX" ELEVATIONS

Title: ALUMINUM CASEMENT WINDOW, IMPACT

Series/Model:	Scale:	Sheet:	Drawing No.	Rev:
CA-740	NTS	4 of 13	7045-8	E

COMPARATIVE ANALYSIS TABLE 1. "X" WINDOWS TEST REPORTS: FTL-3582, FTL-3587, FTL-3729

GLAZING OPTIONS: A. 5/16" LAMI (1/8"A,.090,1/8"HS) B. 5/16" LAMI (1/8"HS,.090,1/8"HS) E. 13/16" LAMI (1/8"HS,3/8" SPACE,5/16" LAMI-W/ 1/8"HS,.090,1/8"HS)

"X" WIDTH		HEIGHT																											
		26		31		36		38 3/8		43		48		50 5/8		54		57		60		63		66		69		72	
		NEG	POS	NEG	POS	NEG	POS	NEG	POS	NEG	POS	NEG	POS	NEG	POS	NEG	POS	NEG	POS	NEG	POS	NEG	POS	NEG	POS	NEG	POS	NEG	POS
19 1/8	A	-90.0	70.0	-90.0	70.0	-90.0	70.0	-90.0	70.0	-90.0	70.0	-90.0	70.0	-90.0	70.0	-90.0	70.0	-90.0	70.0	-90.0	70.0	-90.0	70.0	-90.0	70.0	-90.0	70.0	-90.0	70.0
	B,E	-90.0	70.0	-90.0	70.0	-90.0	70.0	-90.0	70.0	-90.0	70.0	-90.0	70.0	-90.0	70.0	-90.0	70.0	-90.0	70.0	-90.0	70.0	-90.0	70.0	-90.0	70.0	-90.0	70.0	-90.0	70.0
24	A	-90.0	70.0	-90.0	70.0	-90.0	70.0	-90.0	70.0	-90.0	70.0	-90.0	70.0	-90.0	70.0	-90.0	70.0	-90.0	70.0	-89.6	70.0	-86.3	70.0	-84.2	70.0	-83.2	70.0	-81.7	70.0
	B,E	-90.0	70.0	-90.0	70.0	-90.0	70.0	-90.0	70.0	-90.0	70.0	-90.0	70.0	-90.0	70.0	-90.0	70.0	-90.0	70.0	-90.0	70.0	-90.0	70.0	-90.0	70.0	-90.0	70.0	-90.0	70.0
26 1/2	A	-90.0	70.0	-90.0	70.0	-90.0	70.0	-90.0	70.0	-90.0	70.0	-83.6	70.0	-79.9	70.0	-75.4	70.0	-72.4	70.0	-69.9	69.9	-67.8	67.8	-66.2	66.2	-65.0	65.0	-63.7	63.7
	B,E	-90.0	70.0	-90.0	70.0	-90.0	70.0	-90.0	70.0	-90.0	70.0	-90.0	70.0	-90.0	70.0	-90.0	70.0	-90.0	70.0	-90.0	70.0	-90.0	70.0	-90.0	70.0	-90.0	70.0	-90.0	70.0
30	A	-90.0	70.0	-90.0	70.0	-90.0	70.0	-87.4	70.0	-77.6	70.0	-68.4	68.4	-63.9	63.9	-60.0	60.0	-58.5	58.5	-56.2	56.2	-53.4	53.4	-51.3	51.3	-49.8	49.8	-48.3	48.3
	B,E	-90.0	70.0	-90.0	70.0	-90.0	70.0	-90.0	70.0	-90.0	70.0	-90.0	70.0	-90.0	70.0	-90.0	70.0	-90.0	70.0	-90.0	70.0	-90.0	70.0	-90.0	70.0	-90.0	70.0	-90.0	70.0
32	A	-90.0	70.0	-90.0	70.0	-86.3	70.0	-81.0	70.0	-71.1	70.0	-61.8	61.8	-58.9	58.9	-56.1	56.1	-53.8	53.8	-50.4	50.4	-47.7	47.7	-45.6	45.6	-43.9	43.9	-42.2	42.2
	B,E	-90.0	70.0	-90.0	70.0	-90.0	70.0	-90.0	70.0	-90.0	70.0	-90.0	70.0	-90.0	70.0	-90.0	70.0	-90.0	70.0	-90.0	70.0	-90.0	70.0	-90.0	70.0	-87.8	70.0	-84.4	70.0
34	A	-75.0	70.0	-75.0	70.0	-75.0	70.0	-75.0	70.0	-65.5	65.5	-57.5	57.5	-54.9	54.9	-51.8	51.8	-48.6	48.6	-45.2	45.2	-42.4	42.4						
	B,E	-75.0	70.0	-75.0	70.0	-75.0	70.0	-75.0	70.0	-75.0	70.0	-75.0	70.0	-75.0	70.0	-75.0	70.0	-75.0	70.0	-75.0	70.0	-75.0	70.0						
36	A	-75.0	70.0	-75.0	70.0	-75.0	70.0	-70.4	70.0	-60.4	60.4	-54.3	54.3	-51.1	51.1	-47.9	47.9	-44.8	44.8	-42.2	42.2	-39.7	39.7						
	B,E	-75.0	70.0	-75.0	70.0	-75.0	70.0	-75.0	70.0	-75.0	70.0	-75.0	70.0	-75.0	70.0	-75.0	70.0	-75.0	70.0	-75.0	70.0	-75.0	70.0						
37	A	-75.0	70.0	-75.0	70.0	-73.7	70.0	-67.9	67.9	-59.0	59.0	-52.8	52.8	-49.9	49.9	-46.4	46.4	-43.5	43.5	-41.1	41.1	-38.6	38.6						
	B,E	-75.0	70.0	-75.0	70.0	-75.0	70.0	-75.0	70.0	-75.0	70.0	-75.0	70.0	-75.0	70.0	-75.0	70.0	-75.0	70.0	-75.0	70.0	-75.0	70.0						

TABLE 2. "X" WINDOWS TEST REPORTS: FTL-3580, FTL-3587

GLAZING OPTION: C. 7/16" LAMI (3/16"A,.090,3/16"HS)

ALL "X" SIZES UP TO 37" WIDE x 63" HIGH AND ALL "X" SIZES UP TO 32" WIDE x 72" HIGH	-90.0	70.0

TABLE 2A. "X" WINDOWS TEST REPORTS: FTL-4607, FTL-4608 D

GLAZING OPTIONS: C. 7/16" LAMI (3/16"A,.090,3/16"HS) F.13/16" LAMI (1/8"A,AIR SPACE,7/16" LAMI-W/ 3/16"A,.090,3/16"HS)

ALL "X" SIZES UP TO 37" WIDE x 76" HIGH	-55.0	55.0

X

NOTES: D

1. FOR INSTALLATIONS IN WOOD OR CONCRETE TO THE FULL DESIGN PRESSURES IN THE ABOVE TABLES, USE ELCO 1/4" TAPCONS OR 1/4" SS4 CRETE-FLEX ANCHORS.
2. IF INSTALLING WITH #12 SCREWS, DESIGN PRESSURE IS LIMITED TO 69.6 P.S.F.

PRODUCT REVISED
as complying with the Florida Building Code
Acceptance No 11-1110.18
Expiration/Date 05/22/2013
By
Miami Dade Product Control

ANTHONY LYNN MILLER
LICENSE
No. 58705
STATE OF FLORIDA
PROFESSIONAL ENGINEER
10/29/14
A. Lynn Miller, P.E.
P.E.# 58705

Revsd By:	Date:	Revisions:	
F.K.	7/10/03	C	NO CHANGE THIS SHEET
F.K.	6/23/05	D	REVISE ANCHORS & ADD 76" HEIGHT OPTION
J.J.	10/24/11	E	NO CHANGE THIS SHEET
Drawn By: F.K.	Date: 12/17/02	Checked By:	Date:

1070 TECHNOLOGY DRIVE
NOKOMIS, FL 34275

P.O. BOX 1529
NOKOMIS, FL 34274

PGT Visibly Better

Description: PRESSURES- X CONFIG. WINDOWS

Title: ALUMINUM CASEMENT WINDOW, IMPACT

Series/Model:	Scale:	Sheet:	Drawing No.	Rev:
CA-740	NTS	5 of 13	7045-8	E

X	X

COMPARATIVE ANALYSIS TABLE 3. "XX" WINDOWS TEST REPORTS: FTL-3582

GLAZING OPTION: A. 5/16" LAMI (1/8"A,.090,1/8"HS)

"XX" WIDTH		HEIGHT																					
		26		31		36		38 3/8		43		48		50 5/8		54		57		60		63	
		NEG	POS	NEG	POS	NEG	POS	NEG	POS	NEG	POS	NEG	POS	NEG	POS	NEG	POS	NEG	POS	NEG	POS	NEG	POS
37	A	-75.0	70.0	-75.0	70.0	-75.0	70.0	-75.0	70.0	-75.0	70.0	-75.0	70.0	-75.0	70.0	-75.0	70.0	-75.0	70.0	-75.0	70.0	-75.0	70.0
43	A	-75.0	70.0	-75.0	70.0	-75.0	70.0	-75.0	70.0	-75.0	70.0	-75.0	70.0	-75.0	70.0	-75.0	70.0	-75.0	70.0	-75.0	70.0	-75.0	70.0
48	A	-75.0	70.0	-75.0	70.0	-75.0	70.0	-75.0	70.0	-75.0	70.0	-75.0	70.0	-75.0	70.0	-75.0	70.0	-75.0	70.0	-75.0	70.0	-75.0	70.0
53 1/8	A	-75.0	70.0	-75.0	70.0	-75.0	70.0	-75.0	70.0	-75.0	70.0	-75.0	70.0	-75.0	70.0	-75.0	70.0	-72.1	70.0	-69.5	69.5	-67.5	67.5
57	A	-75.0	70.0	-75.0	70.0	-75.0	70.0	-75.0	70.0	-75.0	70.0	-74.4	70.0	-69.6	69.6	-65.2	65.2	-63.0	63.0	-60.8	60.8	-58.0	58.0
60	A	-75.0	70.0	-75.0	70.0	-75.0	70.0	-75.0	70.0	-75.0	70.0	-68.4	68.4	-63.9	63.9	-60.0	60.0	-58.5	58.5	-56.2	56.2	-53.4	53.4
64	A	-75.0	70.0	-75.0	70.0	-75.0	70.0	-75.0	70.0	-71.1	70.0	-61.8	61.8	-58.9	58.9	-56.1	56.1	-53.8	53.8	-50.4	50.4	-47.7	47.7
68	A	-75.0	70.0	-75.0	70.0	-75.0	70.0	-75.0	70.0	-65.5	65.5	-57.5	57.5	-54.9	54.9	-51.8	51.8	-48.6	48.6	-45.2	45.2	-42.4	42.4
72	A	-75.0	70.0	-75.0	70.0	-75.0	70.0	-70.4	70.0	-60.4	60.4	-54.3	54.3	-51.1	51.1	-47.9	47.9	-44.8	44.8	-42.2	42.2	-39.7	39.7
74	A	-75.0	70.0	-75.0	70.0	-73.7	70.0	-67.9	67.9	-59.0	59.0	-52.8	52.8	-49.9	49.9	-46.4	46.4	-43.5	43.5	-41.1	41.1	-38.6	38.6

TABLE 4. "XX" WINDOWS TEST REPORTS: FTL-3582, FTL-3729

GLAZING OPTIONS: B. 5/16" LAMI (1/8"HS,.090,1/8"HS) E. 13/16" LAMI (1/8"HS,3/8" SPACE,5/16" LAMI-W/ 1/8"HS,.090,1/8"HS)

ALL "XX" SIZES UP TO 74" WIDE x 63" HIGH	-75.0	70.0

TABLE 5. "XX" WINDOWS TEST REPORT: FTL-3580

GLAZING OPTION: C. 7/16" LAMI (3/16"A,.090,3/16"HS)

ALL "XX" SIZES UP TO 74" WIDE x 63" HIGH	-90.0	70.0

TABLE 5A. "XX" WINDOWS TEST REPORTS: FTL-3580, FTL-4607, FTL-4608

GLAZING OPTIONS: C. 7/16" LAMI (3/16"A,.090,3/16"HS) F.13/16" LAMI (1/8"A,AIR SPACE,7/16" LAMI-W/ 3/16"A,.090,3/16"HS)

ALL "XX" SIZES UP TO 74" WIDE x 76" HIGH	-55.0	55.0

PRODUCT REVISED
as complying with the Florida
Building Code
Acceptance No 11-1110.18
Expiration Date 05/22/2013
By
Miami Dade Product Control

NOTES: D
1. FOR INSTALLATIONS IN WOOD OR CONCRETE TO THE FULL DESIGN PRESSURES IN THE ABOVE TABLES, USE ELCO 1/4" TAPCONS OR 1/4" SS4 CRETE-FLEX ANCHORS.
2. IF INSTALLING WITH #12 SCREWS, DESIGN PRESSURE IS LIMITED TO 69.6 P.S.F.

ANTHONY LYNN MILLER
LICENSE
No. 58705
10/29/11
STATE OF FLORIDA
PROFESSIONAL ENGINEER
A. Lynn Miller, P.E.
P.E.# 58705

Revsd By:	Date:	Revisions:	
Revsd By: F.K.	Date: 6/23/05	Revisions: D	REVISE ANCHORS & ADD TABLES 76" HEIGHT OPTION
Revsd By: J.J.	Date: 10/24/11	Revisions: E	NO CHANGE THIS SHEET
Drawn By: F.K.	Date: 12/17/02	Checked By:	Date:

1070 TECHNOLOGY DRIVE
NOKOMIS, FL 34275

P.O. BOX 1529
NOKOMIS, FL 34274

PGT
Visibly Better

Description: PRESSURES- XX CONFIG. WINDOWS

Title: ALUMINUM CASEMENT WINDOW, IMPACT

Series/Model:	Scale:	Sheet:	Drawing No.	Rev:
CA-740	NTS	6 of 13	7045-8	E

COMPARATIVE ANALYSIS TABLE 6. "O" & "1/4-1/2-1/4 XOX" WINDOWS TEST REPORTS: FTL-3582, FTL-3729, FTL-4607, FTL-4608

GLAZING OPTIONS: A. 5/16" LAMI (1/8"A,.090,1/8"HS) B. 5/16" LAMI (1/8"HS,.090,1/8"HS) C. 7/16" LAMI (3/16"A,.090,3/16"HS)
E. 13/16" LAMI (1/8"HS,3/8" SPACE,5/16" LAMI-W/ 1/8"HS,.090,1/8"HS) F.13/16" LAMI (1/8"A,AIR SPACE,7/16" LAMI-W/ 3/16"A,.090,3/16"HS)

WIDTHS			HEIGHT																											
			26		31		36		38 3/8		43		48		50 5/8		54		57		60		63		67		72		76	
"O"	"XOX"		NEG	POS	NEG	POS	NEG	POS	NEG	POS	NEG	POS	NEG	POS	NEG	POS	NEG	POS	NEG	POS	NEG	POS	NEG	POS	NEG	POS	NEG	POS	NEG	POS
36	72	A	-75.0	70.0	-75.0	70.0	-75.0	70.0	-70.4	70.0	-60.4	60.4	-54.3	54.3	-51.1	51.1	-47.9	47.9	-44.8	44.8	-42.2	42.2	-39.7	39.7						
		B,E	-75.0	70.0	-75.0	70.0	-75.0	70.0	-75.0	70.0	-75.0	70.0	-75.0	70.0	-75.0	70.0	-75.0	70.0	-75.0	70.0	-75.0	70.0	-75.0	70.0						
		C,F	-90.0	70.0	-90.0	70.0	-90.0	70.0	-90.0	70.0	-90.0	70.0	-90.0	70.0	-90.0	70.0	-90.0	70.0	-90.0	70.0	-90.0	70.0	-90.0	70.0	-55.0	55.0	-55.0	55.0	-55.0	55.0
37	74	A	-75.0	70.0	-75.0	70.0	-73.7	70.0	-67.9	67.9	-59.0	59.0	-52.8	52.8	-49.9	49.9	-46.4	46.4	-43.5	43.5	-41.1	41.1	-38.6	38.6						
		B,E	-75.0	70.0	-75.0	70.0	-75.0	70.0	-75.0	70.0	-75.0	70.0	-75.0	70.0	-75.0	70.0	-75.0	70.0	-75.0	70.0	-75.0	70.0	-75.0	70.0						
		C,F	-90.0	70.0	-90.0	70.0	-90.0	70.0	-90.0	70.0	-90.0	70.0	-90.0	70.0	-90.0	70.0	-90.0	70.0	-90.0	70.0	-90.0	70.0	-90.0	70.0	-55.0	55.0	-55.0	55.0	-55.0	55.0
39 1/2	79	A	-75.0	70.0	-75.0	70.0	-67.8	67.8	-62.1	62.1	-55.7	55.7	-49.8	49.8	-46.9	46.9	-43.6	43.6	-41.1	41.1	-38.6	38.6	-36.5	36.5						
		B,E	-75.0	70.0	-75.0	70.0	-75.0	70.0	-75.0	70.0	-75.0	70.0	-75.0	70.0	-75.0	70.0	-75.0	70.0	-75.0	70.0	-75.0	70.0	-75.0	70.0						
		C,F	-90.0	70.0	-90.0	70.0	-90.0	70.0	-90.0	70.0	-90.0	70.0	-90.0	70.0	-90.0	70.0	-90.0	70.0	-90.0	70.0	-87.4	70.0	-83.2	70.0	-55.0	55.0	-55.0	55.0	-55.0	55.0
42	84	A	-75.0	70.0	-75.0	70.0	-62.4	62.4	-58.4	58.4	-63.3	63.3	-56.4	56.4	-53.4	53.4	-50.0	50.0	-46.9	46.9	-44.3	44.3	-41.9	41.9						
		B,E	-75.0	70.0	-75.0	70.0	-75.0	70.0	-75.0	70.0	-75.0	70.0	-75.0	70.0	-75.0	70.0	-75.0	70.0	-75.0	70.0	-75.0	70.0	-75.0	70.0						
		C,F	-90.0	70.0	-90.0	70.0	-90.0	70.0	-90.0	70.0	-90.0	70.0	-90.0	70.0	-90.0	70.0	-90.0	70.0	-84.5	70.0	-79.7	70.0	-75.6	70.0	-55.0	55.0	-55.0	55.0	-55.0	55.0
45	90	A	-75.0	70.0	-70.3	70.0	-58.0	58.0	-54.6	54.6	-59.3	59.3	-53.6	53.6	-50.9	50.9	-47.5	47.5	-44.7	44.7	-42.1	42.1	-39.7	39.7						
		B,E	-75.0	70.0	-75.0	70.0	-75.0	70.0	-75.0	70.0	-75.0	70.0	-75.0	70.0	-75.0	70.0	-75.0	70.0	-75.0	70.0	-75.0	70.0	-75.0	70.0						
		C,F	-90.0	70.0	-90.0	70.0	-90.0	70.0	-90.0	70.0	-90.0	70.0	-90.0	70.0	-88.2	70.0	-81.8	70.0	-76.9	70.0	-72.4	70.0	-69.2	69.2	-55.0	55.0	-55.0	55.0	-55.0	55.0
48	96	A	-75.0	70.0	-65.0	65.0	-54.3	54.3	-51.1	51.1	-55.1	55.1	-51.4	51.4	-48.6	48.6	-45.3	45.3	-42.5	42.5	-40.4	40.4	-38.4	38.4						
		B,E	-75.0	70.0	-75.0	70.0	-75.0	70.0	-75.0	70.0	-75.0	70.0	-75.0	70.0	-75.0	70.0	-75.0	70.0	-75.0	70.0	-75.0	70.0	-75.0	70.0						
		C,F	-90.0	70.0	-90.0	70.0	-90.0	70.0	-90.0	70.0	-90.0	70.0	-86.0	70.0	-80.9	70.0	-75.0	70.0	-70.7	70.0	-67.3	67.3	-64.1	64.1	-55.0	55.0	-55.0	55.0	-53.2	53.2
50 1/2	101	A	-75.0	70.0	-60.8	60.8	-51.3	51.3	-48.3	48.3	-52.7	52.7	-48.7	48.7	-46.9	46.9	-43.5	43.5	-41.3	41.3	-39.2	39.2	-37.1	37.1						
		B,E	-75.0	70.0	-75.0	70.0	-75.0	70.0	-75.0	70.0	-75.0	70.0	-75.0	70.0	-75.0	70.0	-75.0	70.0	-75.0	70.0	-75.0	70.0	-74.3	70.0						
		C,F	-90.0	70.0	-90.0	70.0	-90.0	70.0	-90.0	70.0	-90.0	70.0	-81.2	70.0	-75.7	70.0	-70.3	70.0	-66.8	66.8	-63.5	63.5	-60.5	60.5	-55.0	55.0	-52.6	52.6	-49.6	49.6
53 1/8	106 3/8	A	-75.0	70.0	-58.7	58.7	-48.7	48.7	-45.4	45.4	-50.0	50.0	-46.1	46.1	-44.2	44.2	-42.2	42.2	-40.1	40.1	-38.0	38.0	-36.2	36.2						
		B,E	-75.0	70.0	-75.0	70.0	-75.0	70.0	-75.0	70.0	-75.0	70.0	-75.0	70.0	-75.0	70.0	-75.0	70.0	-75.0	70.0	-75.0	70.0	-72.4	70.0						
		C,F	-90.0	70.0	-90.0	70.0	-90.0	70.0	-90.0	70.0	-88.6	70.0	-76.4	70.0	-71.1	70.0	-66.5	66.5	-63.0	63.0	-60.0	60.0	-57.3	57.3	-53.8	53.8	-49.4	49.4	-46.2	46.2
54	108	A	-75.0	70.0	-58.2	58.2	-47.9	47.9	-44.5	44.5	-49.1	49.1	-45.3	45.3	-43.4	43.4	-41.9	41.9	-39.8	39.8	-37.6	37.6	-35.9	35.9						
		B,E	-75.0	70.0	-75.0	70.0	-75.0	70.0	-75.0	70.0	-75.0	70.0	-75.0	70.0	-75.0	70.0	-75.0	70.0	-75.0	70.0	-75.0	70.0	-71.8	70.0						
		C,F	-90.0	70.0	-90.0	70.0	-90.0	70.0	-90.0	70.0	-86.9	70.0	-75.0	70.0	-70.1	70.0	-65.4	65.4	-61.8	61.8	-59.1	59.1	-56.4	56.4	-52.8	52.8	-48.4	48.4	-45.2	45.2
55 1/2	111	A	-75.0	70.0	-57.1	57.1	-46.4	46.4	-43.3	43.3	-47.5	47.5	-43.9	43.9	-42.2	42.2	-40.8	40.8	-39.1	39.1	-37.2	37.2	-35.4	35.4						
		B,E	-75.0	70.0	-75.0	70.0	-75.0	70.0	-75.0	70.0	-75.0	70.0	-75.0	70.0	-75.0	70.0	-75.0	70.0	-75.0	70.0	-74.3	70.0	-70.8	70.0						
		C,F	-90.0	70.0	-90.0	70.0	-90.0	70.0	-90.0	70.0	-84.3	70.0	-72.5	70.0	-68.4	68.4	-63.6	63.6	-60.1	60.1	-57.5	57.5	-54.8	54.8	-51.1	51.1	-46.8	46.8	-43.6	43.6
57	114	A	-75.0	70.0	-56.2	56.2	-44.8	44.8	-42.1	42.1	-46.2	46.2	-42.5	42.5	-41.2	41.2	-39.8	39.8	-38.5	38.5	-36.7	36.7	-34.8	34.8						
		B,E	-75.0	70.0	-75.0	70.0	-75.0	70.0	-75.0	70.0	-75.0	70.0	-75.0	70.0	-75.0	70.0	-75.0	70.0	-75.0	70.0	-73.3	70.0	-69.6	69.6						
		C,F	-90.0	70.0	-90.0	70.0	-90.0	70.0	-90.0	70.0	-81.8	70.0	-70.7	70.0	-66.7	66.7	-61.8	61.8	-58.7	58.7	-55.9	55.9	-53.2	53.2	-49.4	49.4	-45.2	45.2	-42.6	42.6
58 1/2	117	A	-74.2	70.0	-55.0	55.0	-43.4	43.4	-40.9	40.9	-44.8	44.8	-41.3	41.3	-40.2	40.2	-38.7	38.7	-37.6	37.6	-36.1	36.1	-34.2	34.2						
		B,E	-75.0	70.0	-75.0	70.0	-75.0	70.0	-75.0	70.0	-75.0	70.0	-75.0	70.0	-75.0	70.0	-75.0	70.0	-75.0	70.0	-72.2	70.0	-68.4	68.4						
		C,F	-90.0	70.0	-90.0	70.0	-90.0	70.0	-90.0	70.0	-79.4	70.0	-69.0	69.0	-64.9	64.9	-60.4	60.4	-57.3	57.3	-54.5	54.5	-51.6	51.6	-47.8	47.8	-43.6	43.6	-41.7	41.7
60	120	A	-72.9	70.0	-53.4	53.4	-42.2	42.2	-39.7	39.7	-43.5	43.5	-40.4	40.4	-39.2	39.2	-37.6	37.6	-36.7	36.7	-35.5	35.5	-33.7	33.7						
		B,E	-75.0	70.0	-75.0	70.0	-75.0	70.0	-75.0	70.0	-75.0	70.0	-75.0	70.0	-75.0	70.0	-75.0	70.0	-73.3	70.0	-71.0	70.0	-67.4	67.4						
		C,F	-90.0	70.0	-90.0	70.0	-90.0	70.0	-90.0	70.0	-77.1	70.0	-67.3	67.3	-63.3	63.3	-59.1	59.1	-55.9	55.9	-53.0	53.0	-50.0	50.0	-46.3	46.3	-42.8	42.8	-40.8	40.8

1/4	1/2	1/4
X	O	X

O

TABLE 7. "O" & "1/4-1/2-1/4 XOX" WINDOWS TEST REPORT: FTL-3580

GLAZING OPTION: D. 7/16" LAMI (3/16"HS,.090,3/16"HS)

ALL "O" SIZES UP TO 60" WIDE x 63" HIGH AND ALL "1/4-1/2-1/4 XOX" SIZES UP TO 120" WIDE x 63" HIGH	-90.0	70.0

TABLE 7A. "O" & "1/4-1/2-1/4 XOX" WINDOWS TEST REPORTS: FTL-4607, FTL-4608

GLAZING OPTIONS: D. 7/16" LAMI (3/16"HS,.090,3/16"HS) G. 13/16" LAMI (1/8"A,AIR SPACE,7/16" LAMI-W/ 3/16"HS,.090,3/16"HS) ⚠D

ALL "O" SIZES UP TO 60" WIDE x 76" HIGH AND ALL "1/4-1/2-1/4 XOX" SIZES UP TO 120" WIDE x 76" HIGH	-55.0	55.0

NOTES: 1. FOR INSTALLATIONS IN WOOD OR CONCRETE TO THE FULL DESIGN PRESSURES IN THE ABOVE TABLES, USE ELCO 1/4" TAPCONS OR ⚠D 1/4" SS4 CRETE-FLEX ANCHORS.

2. IF INSTALLING WITH #12 SCREWS, DESIGN PRESSURE IS LIMITED TO 69.6 P.S.F.

PRODUCT REVISED
as complying with the Florida
Building Code
Acceptance No 11-1110.18
Expiration/Date 05/22/2013
By
Miami Dade Product Control

ANTHONY LYNN MILLER
LICENSE
No. 58705
10/29/11
STATE OF FLORIDA
PROFESSIONAL ENGINEER
A. Lynn Miller, P.E.
P.E.# 58705

Revsd By:	Date:	Revisions:	
F.K.	7/10/03	C	NO CHANGE THIS SHEET
F.K.	6/23/05	D	CHANGE ANCHORS AND ADD 76" HT. OPTION
J.J.	10/24/11	E	NO CHANGE THIS SHEET
Drawn By: F.K.	Date: 12/17/02	Checked By:	Date:

1070 TECHNOLOGY DRIVE
NOKOMIS, FL 34275
P.O. BOX 1529
NOKOMIS, FL 34274

PGT Visibly Better

Description: PRESSURES- O & 1/4-1/2-1/4 XOX CONFIG. WINDOWS

Title: ALUMINUM CASEMENT WINDOW, IMPACT

Series/Model:	Scale:	Sheet:	Drawing No.	Rev:
CA-740	NTS	7 of 13	7045-8	E

COMPARATIVE ANALYSIS TABLE 8. "XO" OR "OX" & "1/3-1/3-1/3 XOX" WINDOWS TEST REPORT: FTL-3582

GLAZING OPTION: A. 5/16" LAMI (1/8"A,.090,1/8"HS)

"XO" WIDTH	"XOX" WIDTH		HEIGHT 26 NEG	26 POS	31 NEG	31 POS	36 NEG	36 POS	38 3/8 NEG	38 3/8 POS	43 NEG	43 POS	48 NEG	48 POS	50 5/8 NEG	50 5/8 POS	54 NEG	54 POS	57 NEG	57 POS	60 NEG	60 POS	63 NEG	63 POS
37	55 1/2	A	-75.0	70.0	-75.0	70.0	-75.0	70.0	-75.0	70.0	-75.0	70.0	-75.0	70.0	-75.0	70.0	-75.0	70.0	-75.0	70.0	-75.0	70.0	-75.0	70.0
48	72	A	-75.0	70.0	-75.0	70.0	-75.0	70.0	-75.0	70.0	-75.0	70.0	-75.0	70.0	-75.0	70.0	-75.0	70.0	-75.0	70.0	-75.0	70.0	-75.0	70.0
49 1/3	74	A	-75.0	70.0	-75.0	70.0	-75.0	70.0	-75.0	70.0	-75.0	70.0	-75.0	70.0	-75.0	70.0	-75.0	70.0	-75.0	70.0	-75.0	70.0	-75.0	70.0
53 1/8	79 2/3	A	-75.0	70.0	-75.0	70.0	-75.0	70.0	-75.0	70.0	-75.0	70.0	-75.0	70.0	-75.0	70.0	-75.0	70.0	-72.1	70.0	-69.5	69.5	-67.5	67.5
56	84	A	-75.0	70.0	-75.0	70.0	-75.0	70.0	-75.0	70.0	-75.0	70.0	-75.0	70.0	-71.9	70.0	-67.7	67.7	-64.9	64.9	-62.7	62.7	-60.4	60.4
60	90	A	-75.0	70.0	-75.0	70.0	-75.0	70.0	-75.0	70.0	-75.0	70.0	-68.4	68.4	-63.9	63.9	-60.0	60.0	-58.5	58.5	-56.2	56.2	-53.4	53.4
64	96	A	-75.0	70.0	-75.0	70.0	-75.0	70.0	-75.0	70.0	-71.1	70.0	-61.8	61.8	-58.9	58.9	-56.1	56.1	-53.8	53.8	-50.4	50.4	-47.7	47.7
67.333	101	A	-75.0	70.0	-75.0	70.0	-75.0	70.0	-75.0	70.0	-66.4	66.4	-58.2	58.2	-55.6	55.6	-52.6	52.6	-49.4	49.4	-45.9	45.9	-43.1	43.1
70.917	106 3/8	A	-75.0	70.0	-75.0	70.0	-75.0	70.0	-71.8	70.0	-61.8	61.8	-55.1	55.1	-51.9	51.9	-48.9	48.9	-45.8	45.8	-42.8	42.8	-40.3	40.3
72	108	A	-75.0	70.0	-75.0	70.0	-75.0	70.0	-70.4	70.0	-60.4	60.4	-54.3	54.3	-51.1	51.1	-47.9	47.9	-44.8	44.8	-42.2	42.2	-39.7	39.7
74	111	A	-75.0	70.0	-75.0	70.0	-73.7	70.0	-67.9	67.9	-59.0	59.0	-52.8	52.8	-49.9	49.9	-46.4	46.4	-43.5	43.5	-41.1	41.1	-38.6	38.6

1/3	1/3	1/3
X	O	X

X	O

O	X

TABLE 9. "XO" or "OX" & "1/3-1/3-1/3 XOX" WINDOWS TEST REPORTS: FTL-3582, FTL-3729

GLAZING OPTIONS: B. 5/16" LAMI (1/8"HS,.090,1/8"HS) E. 13/16" LAMI (1/8"HS,3/8" SPACE,5/16" LAMI-W/ 1/8"HS,.090,1/8"HS)

ALL "XO" OR "OX" SIZES UP TO 74" WIDE x 63" HIGH AND ALL "1/3-1/3-1/3 XOX" SIZES UP TO 111" WIDE x 63" HIGH	-75.0	70.0

TABLE 10. "XO" or "OX" & "1/3-1/3-1/3 XOX" WINDOWS TEST REPORT: FTL-3580

GLAZING OPTION: C. 7/16" LAMI (3/16"A,.090,3/16"HS)

ALL "XO" OR "OX" SIZES UP TO 74" WIDE x 63" HIGH AND ALL "1/3-1/3-1/3 XOX" SIZES UP TO 111" WIDE x 63" HIGH	-90.0	70.0

TABLE 10A. "XO" or "OX" & "1/3-1/3-1/3 XOX" WINDOWS TEST REPORTS: FTL-3580, FTL-4607, FTL-4608

GLAZING OPTIONS: C. 7/16" LAMI (3/16"A,.090,3/16"HS) F.13/16" LAMI (1/8"A,AIR SPACE,7/16" LAMI-W/ 3/16"A,.090,3/16"HS)

ALL "XO" OR "OX" SIZES UP TO 74" WIDE x 76" HIGH AND ALL "1/3-1/3-1/3 XOX" SIZES UP TO 111" WIDE x 76" HIGH	-55.0	55.0

△D

PRODUCT REVISED
as complying with the Florida
Building Code
Acceptance No 11-1110.18
Expiration Date 05/22/2013
By
Miami Dade Product Control

NOTES: △D

1. FOR INSTALLATIONS IN WOOD OR CONCRETE TO THE FULL DESIGN PRESSURES IN THE ABOVE TABLES, USE ELCO 1/4" TAPCONS OR 1/4" SS4 CRETE-FLEX ANCHORS.
2. IF INSTALLING WITH #12 SCREWS, DESIGN PRESSURE IS LIMITED TO 69.6 P.S.F.

ANTHONY LYNN MILLER
LICENSE
No. 58705
10/29/11
STATE OF FLORIDA
PROFESSIONAL ENGINEER
A. Lynn Miller, P.E.
P.E.# 58705

Revsd By:	Date:	Revisions:	
F.K.	7/10/03	C	NO CHANGE THIS SHEET
F.K.	6/23/05	D	CHANGE ANCHORS AND ADD 76" HEIGHT OPTION
J.J.	10/24/11	E	NO CHANGE THIS SHEET
Drawn By: F.K.	Date: 12/17/02	Checked By:	Date:

1070 TECHNOLOGY DRIVE
NOKOMIS, FL 34275

P.O. BOX 1529
NOKOMIS, FL 34274

PGT Visibly Better

Description: PRESSURES- XO, OX, & 1/3-1/3-1/3 XOX WINDOWS

Title: ALUMINUM CASEMENT WINDOW, IMPACT

Series/Model:	Scale:	Sheet:	Drawing No.	Rev:
CA-740	NTS	8 of 13	7045-8	E

COMPARATIVE ANALYSIS TABLE 11. "XO" or "OX" & "XOX" UNEQUAL LITE WINDOWS TEST REPORTS: FTL-3580, FTL-3582, FTL-3729, FTL-4607, FTL-4608

GLAZING OPTIONS: A. 5/16" LAMI (1/8"A,.090,1/8"HS) B. 5/16" LAMI (1/8"HS,.090,1/8"HS) C. 7/16" LAMI (3/16"A,.090,3/16"HS)
E. 13/16" LAMI (1/8"HS,3/8" SPACE,5/16" LAMI-W/ 1/8"HS,.090,1/8"HS) F. 13/16" LAMI (1/8"A,AIR SPACE,7/16" LAMI-W/ 3/16"A,.090,3/16"HS)

WIDTHS				HEIGHT																									
				26		36		38 3/8		43		48		50 5/8		54		57		60		63		67		72		76	
"XOX"	VENT	FIXED		NEG	POS	NEG	POS	NEG	POS	NEG	POS	NEG	POS	NEG	POS	NEG	POS	NEG	POS	NEG	POS	NEG	POS	NEG	POS	NEG	POS	NEG	POS
69.264	19.125	31.014	A	-75.0	70.0	-75.0	70.0	-75.0	70.0	-74.1	70.0	-64.9	64.9	-60.6	60.6	-58.1	58.1	-56.1	56.1	-53.3	53.3	-50.5	50.5						
			B,E	-75.0	70.0	-75.0	70.0	-75.0	70.0	-75.0	70.0	-75.0	70.0	-75.0	70.0	-75.0	70.0	-75.0	70.0	-75.0	70.0	-75.0	70.0						
			C,F	-90.0	70.0	-90.0	70.0	-90.0	70.0	-90.0	70.0	-90.0	70.0	-90.0	70.0	-90.0	70.0	-90.0	70.0	-90.0	70.0	-90.0	70.0	-55.0	55.0	-55.0	55.0	-55.0	55.0
86.919	24	38.919	A	-75.0	70.0	-69.1	69.1	-63.4	63.4	-56.5	56.5	-50.4	50.4	-47.5	47.5	-44.1	44.1	-41.6	41.6	-39.2	39.2	-36.9	36.9						
			B,E	-75.0	70.0	-75.0	70.0	-75.0	70.0	-75.0	70.0	-75.0	70.0	-75.0	70.0	-75.0	70.0	-75.0	70.0	-75.0	70.0	-73.8	70.0						
			C,F	-90.0	70.0	-90.0	70.0	-90.0	70.0	-90.0	70.0	-90.0	70.0	-90.0	70.0	-90.0	70.0	-90.0	70.0	-89.4	70.0	-85.2	70.0	-55.0	55.0	-55.0	55.0	-55.0	55.0
95.973	27	42.973	A	-75.0	70.0	-60.5	60.5	-57.2	57.2	-62.1	62.1	-55.2	55.2	-52.6	52.6	-49.1	49.1	-46.2	46.2	-43.6	43.6	-41.1	41.1						
			B,E	-75.0	70.0	-75.0	70.0	-75.0	70.0	-75.0	70.0	-75.0	70.0	-75.0	70.0	-75.0	70.0	-75.0	70.0	-75.0	70.0	-75.0	70.0						
			C,F	-90.0	70.0	-90.0	70.0	-90.0	70.0	-90.0	70.0	-90.0	70.0	-90.0	70.0	-87.0	70.0	-81.9	70.0	-77.2	70.0	-73.1	70.0	-55.0	55.0	-55.0	55.0	-55.0	55.0
108.649	30	48.649	A	-75.0	70.0	-53.5	53.5	-50.4	50.4	-54.5	54.5	-50.7	50.7	-48.2	48.2	-44.9	44.9	-42.0	42.0	-40.1	40.1	-38.0	38.0						
			B,E	-75.0	70.0	-75.0	70.0	-75.0	70.0	-75.0	70.0	-75.0	70.0	-75.0	70.0	-75.0	70.0	-75.0	70.0	-75.0	70.0	-75.0	70.0						
			C,F	-90.0	70.0	-90.0	70.0	-90.0	70.0	-90.0	70.0	-84.7	70.0	-79.5	70.0	-73.6	70.0	-69.7	69.7	-66.3	66.3	-63.1	63.1	-55.0	55.0	-55.0	55.0	-52.2	52.2
115.892	32	51.892	A	-75.0	70.0	-49.9	49.9	-46.8	46.8	-51.3	51.3	-47.4	47.4	-45.5	45.5	-42.7	42.7	-40.7	40.7	-38.6	38.6	-36.6	36.6						
			B,E	-75.0	70.0	-75.0	70.0	-75.0	70.0	-75.0	70.0	-75.0	70.0	-75.0	70.0	-75.0	70.0	-75.0	70.0	-75.0	70.0	-73.2	70.0						
			C,F	-90.0	70.0	-90.0	70.0	-90.0	70.0	-90.0	70.0	-78.6	70.0	-73.2	70.0	-68.3	68.3	-64.8	64.8	-61.4	61.4	-58.8	58.8	-55.0	55.0	-50.9	50.9	-47.7	47.7
122	33.687	54.627	A	-75.0	70.0	-47.3	47.3	-44.0	44.0	-48.4	48.4	-44.7	44.7	-42.8	42.8	-41.4	41.4	-39.5	39.5	-37.5	37.5	-35.7	35.7						
			B,E	-75.0	70.0	-75.0	70.0	-75.0	70.0	-75.0	70.0	-75.0	70.0	-75.0	70.0	-75.0	70.0	-75.0	70.0	-74.9	70.0	-71.4	70.0						
			C,F	-90.0	70.0	-90.0	70.0	-90.0	70.0	-85.8	70.0	-74.0	70.0	-69.4	69.4	-64.7	64.7	-61.0	61.0	-58.4	58.4	-55.7	55.7	-52.1	52.1	-47.7	47.7	-44.6	44.6
123.135	34	55.135	A	-75.0	70.0	-46.8	46.8	-43.6	43.6	-47.9	47.9	-44.3	44.3	-42.4	42.4	-41.1	41.1	-39.3	39.3	-37.3	37.3	-35.5	35.5						
			B,E	-75.0	70.0	-75.0	70.0	-75.0	70.0	-75.0	70.0	-75.0	70.0	-75.0	70.0	-75.0	70.0	-75.0	70.0	-74.6	70.0	-71.0	70.0						
			C,F	-90.0	70.0	-90.0	70.0	-90.0	70.0	-85.0	70.0	-73.1	70.0	-68.8	68.8	-64.1	64.1	-60.5	60.5	-57.9	57.9	-55.2	55.2	-51.5	51.5	-47.2	47.2	-44.0	44.0
126.000	34.791	56.418	A	-75.0	70.0	-45.5	45.5	-42.6	42.6	-46.7	46.7	-43.1	43.1	-41.6	41.6	-40.2	40.2	-38.7	38.7	-36.9	36.9	-35.0	35.0						
			B,E	-75.0	70.0	-75.0	70.0	-75.0	70.0	-75.0	70.0	-75.0	70.0	-75.0	70.0	-75.0	70.0	-75.0	70.0	-73.7	70.0	-70.1	70.0						
			C,F	-90.0	70.0	-90.0	70.0	-90.0	70.0	-82.8	70.0	-71.3	70.0	-67.3	67.3	-62.5	62.5	-59.2	59.2	-56.5	56.5	-53.8	53.8	-50.1	50.1	-45.8	45.8	-43.0	43.0
130	35.896	58.209	A	-74.4	70.0	-43.6	43.6	-41.2	41.2	-45.1	45.1	-41.5	41.5	-40.4	40.4	-38.9	38.9	-37.7	37.7	-36.2	36.2	-34.3	34.3						
			B,E	-75.0	70.0	-75.0	70.0	-75.0	70.0	-75.0	70.0	-75.0	70.0	-75.0	70.0	-75.0	70.0	-75.0	70.0	-72.4	70.0	-68.6	68.6						
			C,F	-90.0	70.0	-90.0	70.0	-90.0	70.0	-79.9	70.0	-69.3	69.3	-65.3	65.3	-60.6	60.6	-57.6	57.6	-54.7	54.7	-51.9	51.9	-48.1	48.1	-43.9	43.9	-41.9	41.9
130.378	36	58.378	A	-74.3	70.0	-43.5	43.5	-41.0	41.0	-45.0	45.0	-41.4	41.4	-40.3	40.3	-38.8	38.8	-37.6	37.6	-36.1	36.1	-34.3	34.3						
			B,E	-75.0	70.0	-75.0	70.0	-75.0	70.0	-75.0	70.0	-75.0	70.0	-75.0	70.0	-75.0	70.0	-75.0	70.0	-72.3	70.0	-68.5	68.5						
			C,F	-90.0	70.0	-90.0	70.0	-90.0	70.0	-79.6	70.0	-69.1	69.1	-65.1	65.1	-60.5	60.5	-57.4	57.4	-54.6	54.6	-51.7	51.7	-48.0	48.0	-43.8	43.8	-41.8	41.8
134	37	60	A	-72.9	70.0	-42.2	42.2	-39.7	39.7	-43.5	43.5	-40.4	40.4	-39.2	39.2	-37.7	37.7	-36.7	36.7	-35.5	35.5	-33.7	33.7						
			B,E	-75.0	70.0	-75.0	70.0	-75.0	70.0	-75.0	70.0	-75.0	70.0	-75.0	70.0	-75.0	70.0	-73.3	70.0	-71.0	70.0	-67.4	67.4						
			C,F	-90.0	70.0	-90.0	70.0	-90.0	70.0	-77.1	70.0	-67.3	67.3	-63.3	63.3	-59.1	59.1	-55.9	55.9	-53.0	53.0	-50.0	50.0	-46.3	46.3	-42.8	42.8	-40.8	40.8

"XO" & "OX" WINDOW WIDTHS EQUAL THE SUM OF THE VENT WIDTH AND THE FIXED WIDTH.

TABLE 12. "XO" or "OX" & "XOX" UNEQUAL LITE WINDOWS TEST REPORT: FTL-3580		
GLAZING OPTION: D. 7/16" LAMI (3/16"HS,.090,3/16"HS)		
ALL "XOX" SIZES UP TO 134" WIDE x 63" HIGH WITH 37" MAX. VENT WIDTH AND 60" MAX. FIXED WIDTH AND ALL "XO" or "OX" SIZES UP TO 97" WIDE x 63" HIGH WITH 37" MAX. VENT WIDTH AND 60" MAX. FIXED WIDTH	-90.0	70.0

TABLE 12A. "XO" or "OX" & "XOX" UNEQUAL LITE WINDOWS TEST REPORTS: FTL-3580, FTL-4607, FTL-4608 △D		
GLAZING OPTIONS: D. 7/16" LAMI (3/16"HS,.090,3/16"HS) G. 13/16" LAMI (1/8"A,AIR SPACE,7/16" LAMI-W/ 3/16"HS,.090,3/16"HS)		
ALL "XOX" SIZES UP TO 134" WIDE x 76" HIGH WITH 37" MAX. VENT WIDTH AND 60" MAX. FIXED WIDTH AND ALL "XO" or "OX" SIZES UP TO 97" WIDE x 76" HIGH WITH 37" MAX. VENT WIDTH AND 60" MAX. FIXED WIDTH	-55.0	55.0

NOTES: 1. FOR INSTALLATIONS IN WOOD OR CONCRETE TO THE FULL DESIGN PRESSURES IN THE ABOVE TABLES, USE ELCO 1/4" TAPCONS OR
△D 1/4" SS4 CRETE-FLEX ANCHORS.
2. IF INSTALLING WITH #12 SCREWS, DESIGN PRESSURE IS LIMITED TO 69.6 P.S.F.

Revsd By:	Date:	Revisions:	
F.K.	7/10/03	C	NO CHANGE THIS SHEET
F.K.	6/23/05	D	CHANGE ANCHORS AND ADD 76" HEIGHT OPTION
J.J.	10/24/11	E	NO CHANGE THIS SHEET
Drawn By: F.K.	Date: 12/17/02	Checked By:	Date:

1070 TECHNOLOGY DRIVE
NOKOMIS, FL 34275
P.O. BOX 1529
NOKOMIS, FL 34274

PGT Visibly Better

Description: PRESSURES- UNEQUAL CONFIG. XO, OX & XOX
Title: ALUMINUM CASEMENT WINDOW, IMPACT

Series/Model:	Scale:	Sheet:	Drawing No.	Rev:
CA-740	NTS	9 of 13	7045-8	E

X	O	X

UNEQUAL LITES

X	O

UNEQUAL LITES

O	X

UNEQUAL LITES

PRODUCT REVISED
as complying with the Florida
Building Code
Acceptance No 11-1110.18
Expiration Date 05/22/2013
By
Miami Dade Product Control

ANTHONY LYNN MILLER
LICENSE
No. 58705
10/29/11
STATE OF FLORIDA
PROFESSIONAL ENGINEER
A. Lynn Miller P.E.
P.E.# 58705

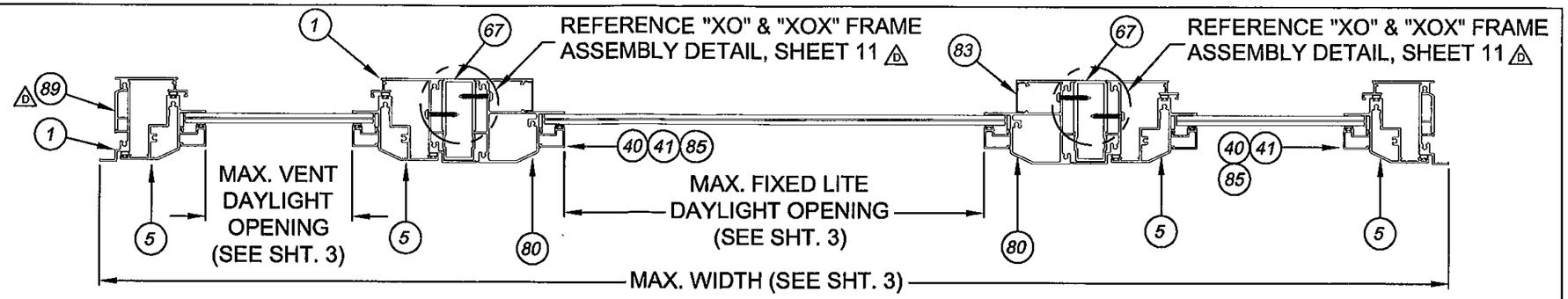

HORIZONTAL SECTION - XOX

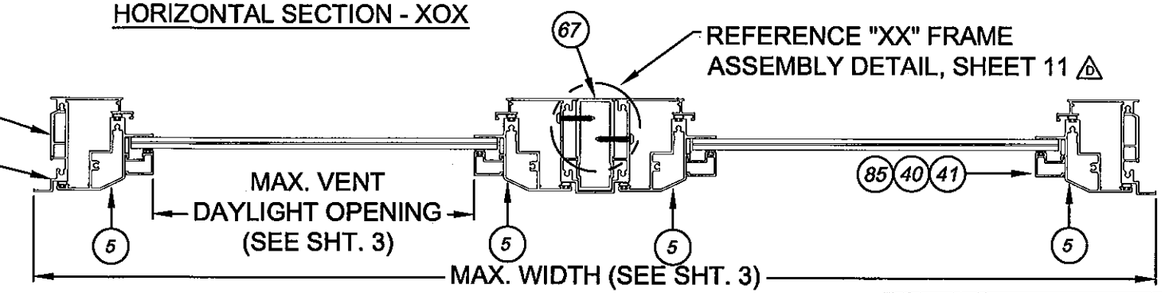

HORIZONTAL SECTION - XX

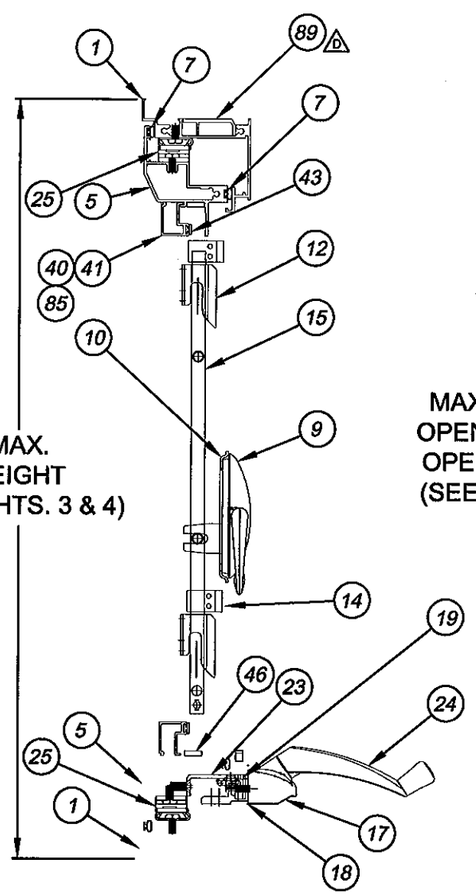

VERTICAL SECTION
OPERABLE UNIT

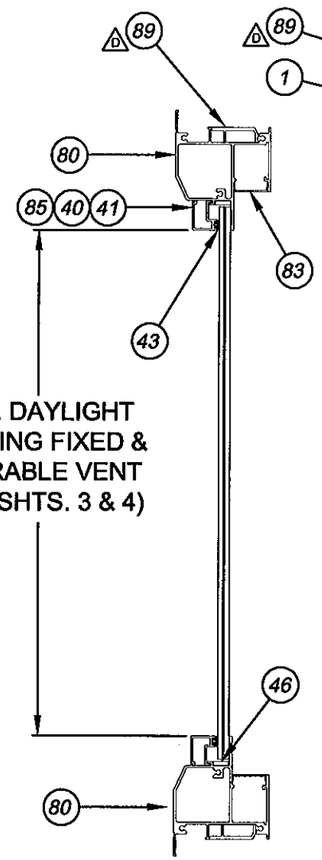

VERTICAL SECTION
FIXED UNIT

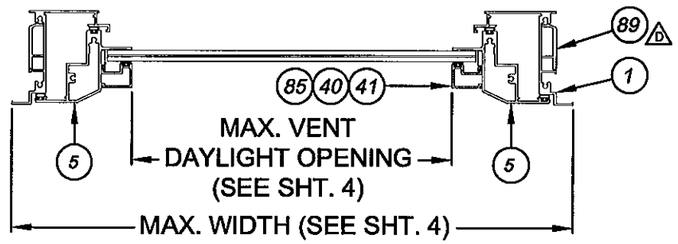

HORIZONTAL SECTION - X

PRODUCT REVISED
as complying with the Florida
Building Code
Acceptance No. 11-1110.18
Expiration Date 05/22/2013
By
Miami Dade Product Control

ANTHONY LYNN MILLER
LICENSE
No. 58705
10/29/11
STATE OF FLORIDA
PROFESSIONAL ENGINEER
A. Lynn Miller, P.E.
P.E.# 58705

Revsd By:	Date:	Revisions:	
F.K.	7/10/03	C	SHOW TOP HINGE
F.K.	6/23/05	D	CHG SHT. NO. REF. AND ADD ITEM 89
J.J.	10/24/11	E	NO CHANGE THIS SHEET
Drawn By: F.K.	Date: 12/17/02	Checked By:	Date:

1070 TECHNOLOGY DRIVE
NOKOMIS, FL 34275

P.O. BOX 1529
NOKOMIS, FL 34274

PGT
Visibly Better

Description: SECTIONS

Title: ALUMINUM CASEMENT WINDOW, IMPACT

Series/Model:	Scale:	Sheet:	Drawing No.	Rev:
CA-740	NTS	10 of 13	7045-8	E

NOTE: ALL ALUMINUM SHALL BE OF 6063-T6

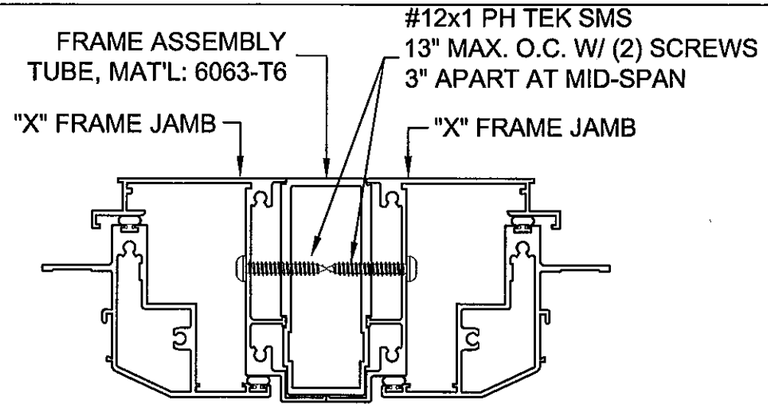

"XX" FRAME ASSEMBLY DETAIL

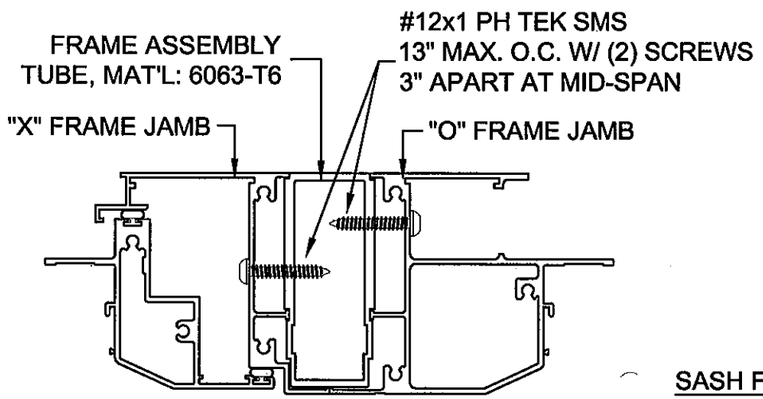

"XO" & "XOX" FRAME ASSEMBLY DETAIL

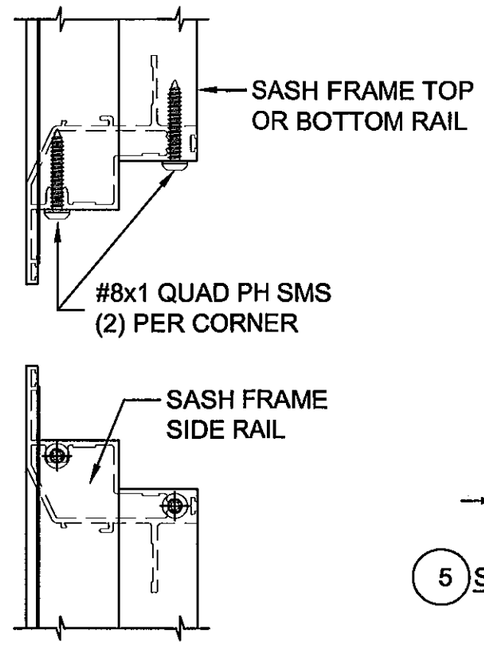

SASH FRAME ASSEMBLY DETAIL

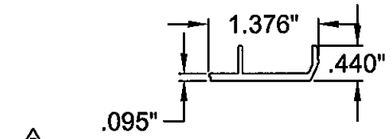

89 CASEMENT BACKING PLATE

MAT'L: 6063-T6
DWG# 7071

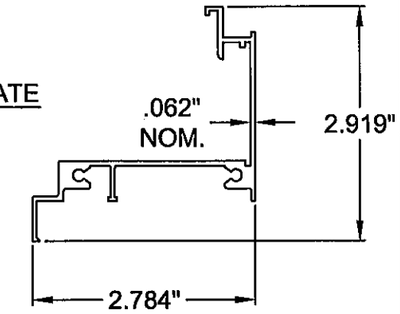

1 FRAME HEAD, SILL, JAMB

MAT'L: 6063-T6
DWG# 7002A

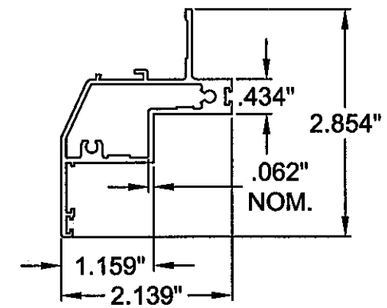

5 SASH FRAME HEAD, SILL, JAMB

MAT'L: 6063-T6
DWG# 7003A

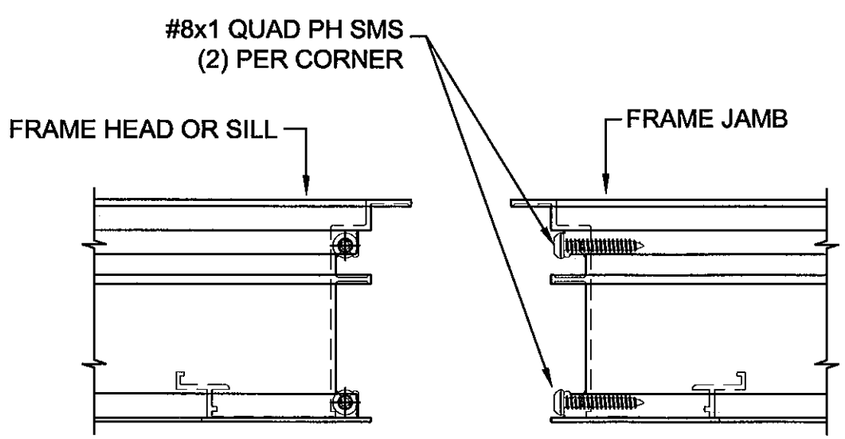

MAIN FRAME ASSEMBLY DETAIL

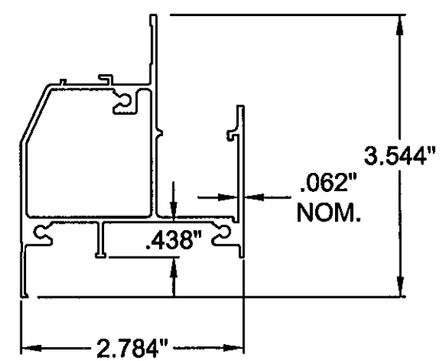

80 FIXED FRAME HEAD, SILL, JAMB

MAT'L: 6063-T6
DWG# 7005A

PRODUCT REVISED
as complying with the Florida
Building Code
Acceptance No 11-1110.18
Expiration Date 06/22/2013
By
Miami Dade Product Control

ANTHONY LYNN MILLER
LICENSE
No. 58705
10/29/11
STATE OF FLORIDA
PROFESSIONAL ENGINEER
A. Lynn Miller, P.E.
P.E.# 58705

Revsd By:	Date:	Revisions:	
F.K.	7/10/03	C	NO CHANGE THIS SHEET
F.K.	6/23/05	D	ADD ITEM 89
J.J.	10/24/11	E	NO CHANGE THIS SHEET
Drawn By: F.K.	Date: 12/17/02	Checked By:	Date:

1070 TECHNOLOGY DRIVE
NOKOMIS, FL 34275

P.O. BOX 1529
NOKOMIS, FL 34274

PGT
Visibly Better

Description: EXTRUSIONS & ASSEMBLY DETAILS

Title: ALUMINUM CASEMENT WINDOW, IMPACT

Series/Model:	Scale:	Sheet:	Drawing No.	Rev:
CA-740	NTS	11 of 13	7045-8	E

PARTS LIST

ITEM	DWG #	PGT. #	DESCRIPTION
1	7002A		MAIN FRAME - HEAD, SILL & JAMBS
2	1155	781PQA	#8 X 1 QUAD PH SMS
3	7008		FRAME CORNER KEY
4			1/2"X1/2"X1/8" CLOSED-CELL FOAM TAPE
5	7003A		SASH - TOP, BOTTOM & SIDE RAILS
6	1155	781PQA	#8 X 1 QUAD PH SMS
7	7017	67017K	BULB WEATHERSTRIP .187X.240
8	7009		SASH CORNER KEY
9	7024		MAXIM MULTI-POINT LOCK
10	7026		LOCK SUPPORT PLATE
11			#10-24 X .562 PH. PN. TYPE F
12	7014		MULTI-LOCK KEEPER (R.H. & L.H.)
13	1157	78X78PPSMS	#8 X .875 PH. PN. SMS
14	7013		TIE BAR GUIDE
15	7015		TIE BAR ASSEMBLY
16	7028		MAXIM DYAD OPERATOR
17	7027		MAXIM DUAL ARM OPERATOR
18	7030		OPERATOR GASKET
19	7031		BACKING PLATE
20			#8-32 X .375 PH. PN. TYPE B
21	7032		STUD BRACKET (L.H. & R.H.)
22		7858ZA	#8 X 5/8" FLT. PHL SMS
23	7033		OPERATOR TRACK & SLIDER (DUAL ARM)
24	7022		SNAP-ON HANDLE
25	7023		12" HINGE (HEAVY DUTY)
26		710x12FP	#10 X .500 PH. PHL.
30			5/16" LAMINATED (1/8A & 1/8HS GLASS) .090 INTERLAYER - SOLUTIA OR DUPONT PVB
31			5/16" LAMINATED (1/8HS & 1/8HS GLASS) .090 INTERLAYER - SOLUTIA OR DUPONT PVB
32			7/16" LAMINATED (3/16A & 3/16HS GLASS) .090 INTERLAYER - SOLUTIA OR DUPONT PVB
33			7/16" LAMINATED (3/16HS & 3/16HS GLASS) .090 INTERLAYER - SOLUTIA OR DUPONT PVB
40	7036		GLAZING BEAD (5/16")
41	7042		GLAZING BEAD (7/16")
43	1224	6TP247	VINYL BULB WSTP (THICK)
44			SILICONE - DOW CORNING 899, 995 OR EQUIV.
45			PARABOND
46	1634	6163K	SETTING BLOCK
50	7006		SCREEN FRAME
51	7040		SCREEN CORNER KEY
52			SCREEN CLOTH
53	1635	61635K	SCREEN SPLINE - SERRATED
54	331	60976	CASEMENT SCREEN CLIP
55		78x12PSTW/B	#8 X .500 SQ. PN. TEK SMS
67	7004A	67004	CASEMENT FRAME ASS'Y. TUBE
68		712X1PPT	#12 X 1" PH. PHIL. TEK.
69	7011		LOCK SUPPORT PLATE
70	7012		LOCK SPACER
71	7019	711573	SNAP-ON T-HANDLE KNOB
72	7018	7FLDHD	FOLDING HANDLE

PARTS LIST CONT.

ITEM	DWG #	PGT. #	DESCRIPTION
73	7025		MAXIM SINGLE LOCK
74	7016		SINGLE LOCK KEEPER
75		70834A	#8 X .750 QUAD PN SMS
80	7005A		FIXED WINDOW FRAME - HEAD, SILL & JAMBS
81	1155	781PQA	#8 X 1 QUAD PN SMS
82	7010		FIXED FRAME CORNER KEY
83	7007		INSTALLATION HOLE COVER
85	7047	67407	GLAZING BEAD (13/16" I.G.)
86		13/16"	I.G. GLASS (1/8"HS, AIR SPACE, 5/16"LAMI) 5/16" LAMI = (2) LITES OF 1/8"HS GLASS WITH AN.090 INTERLAYER - SOLUTIA OR DUPONT PVB
87		13/16"	I.G. GLASS (1/8"HS, AIR SPACE, 7/16"LAMI) 7/16" LAMI = 3/16A & 3/16HS GLASS WITH AN.090 INTERLAYER - SOLUTIA OR DUPONT PVB
88		13/16"	I.G. GLASS (1/8"HS, AIR SPACE, 7/16"LAMI) 7/16" LAMI = 3/16HS & 3/16HS GLASS WITH AN.090 INTERLAYER - SOLUTIA OR DUPONT PVB
89	7071	67071	CASEMENT BACKING PLATE (SEE NOTE 4, SHEET 13)

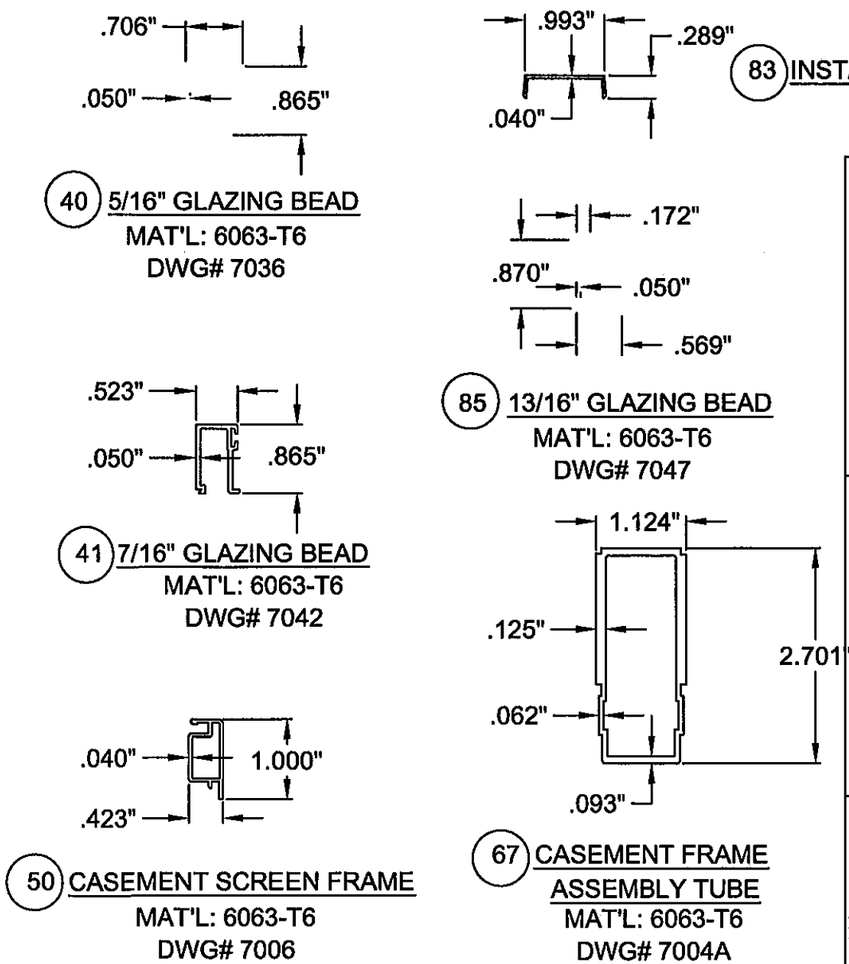

PRODUCT REVISED
as complying with the Florida Building Code
Acceptance No 11-1110.18
Expiration Date 05/22/2013
By
Miami Dade Product Control

ANTHONY LYNN MILLER
LICENSE
No. 58705
10/29/11
STATE OF FLORIDA
PROFESSIONAL ENGINEER
A. Lynn Miller, P.E.
P.E.# 58705

Revsd By:	Date:	Revisions:	
F.K.	7/10/03	C	NO CHANGE THIS SHEET
F.K.	6/23/05	D	ADD EQUIV. TO ITEM 44, SILICONE AND ADD ITEMS 87, 88 AND 89
J.J.	10/24/11	E	NO CHANGE THIS SHEET
Drawn By: F.K.	Date: 12/17/02	Checked By:	Date:

1070 TECHNOLOGY DRIVE
NOKOMIS, FL 34275
P.O. BOX 1529
NOKOMIS, FL 34274

PGT Visibly Better

Description: PARTS LIST & EXTRUSIONS
Title: ALUMINUM CASEMENT WINDOW, IMPACT

Series/Model:	Scale:	Sheet:	Drawing No.	Rev:
CA-740	NTS	12 of 13	7045-8	E

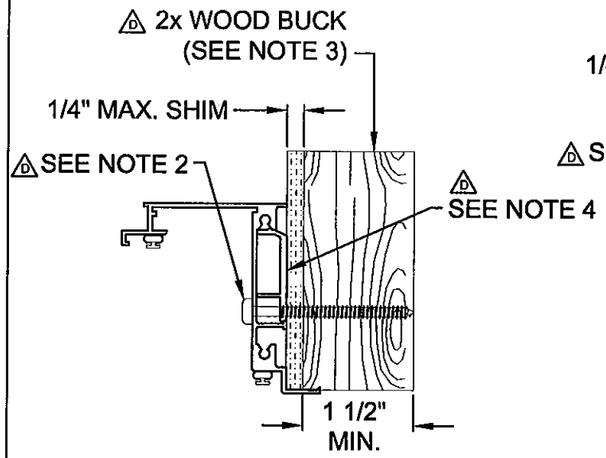

OPERABLE UNIT FRAME
TO WOOD BUCK
1 1/2" OR MORE THICK

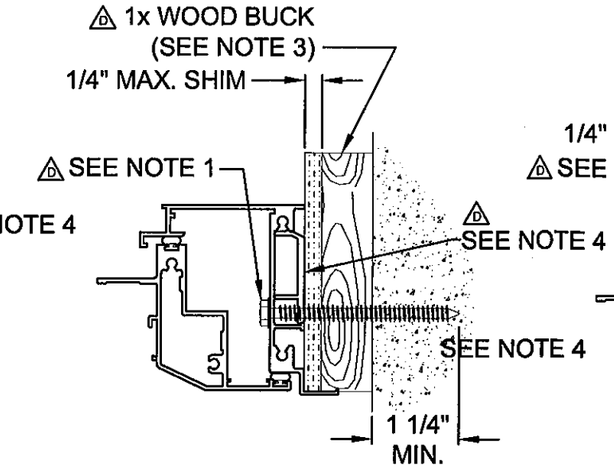

OPERABLE UNIT FRAME
TO CONCRETE W/ WOOD BUCK
LESS THAN 1 1/2" THICK

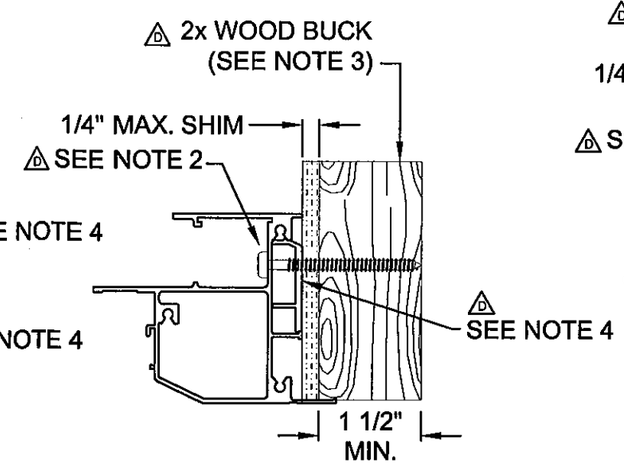

FIXED UNIT FRAME
TO WOOD BUCK
1 1/2" OR MORE THICK

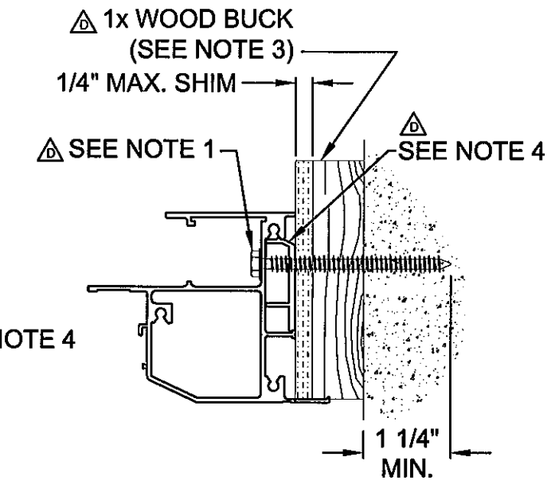

FIXED UNIT FRAME TO CONCRETE W/
WOOD BUCK LESS THAN 1 1/2" THICK

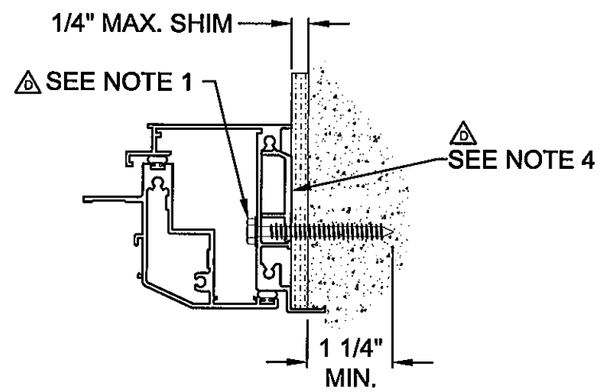

OPERABLE UNIT FRAME
TO CONCRETE

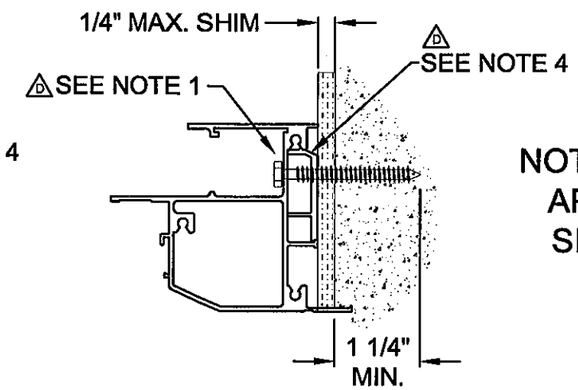

FIXED UNIT FRAME
TO CONCRETE

NOTE: ALL DETAILS APPLY TO HEAD, SILL, AND JAMB.

NOTES:

1. FOR CONCRETE APPLICATIONS IN MIAMI-DADE COUNTY, USE ONLY MIAMI-DADE COUNTY APPROVED 1/4" ELCO TAPCONS OR 1/4" SS4 CRETE-FLEX CONCRETE ANCHORS. MINIMUM DISTANCE FROM ANCHOR TO CONCRETE EDGE IS 2 1/2". SEE SHEET 1 FOR SPACING.
2. FOR WOOD APPLICATIONS IN MIAMI-DADE COUNTY, USE #12 SCREWS, 1/4" ELCO TAPCONS OR 1/4" ELCO SS4 CRETE-FLEX. SEE SHEET 1 FOR SPACING.
3. WOOD BUCKS DEPICTED IN THE SECTIONS ON THIS PAGE AS 1x ARE BUCKS WHOSE TOTAL THICKNESS IS LESS THAN 1 1/2". 1x WOOD BUCKS ARE OPTIONAL IF UNIT IS INSTALLED DIRECTLY TO SOLID CONCRETE. WOOD BUCKS DEPICTED AS 2x ARE 1 1/2" THICK OR GREATER. INSTALLATION TO THE SUBSTRATE OF WOOD BUCKS TO BE ENGINEERED BY OTHERS OR AS APPROVED BY AUTHORITY HAVING JURISDICTION.
4. ITEM 89, BACKING PLATE, NOT REQUIRED FOR INSTALLATIONS OUTSIDE OF MIAMI-DADE COUNTY.

Revsd By:	Date:	Revisions:	
F.K.	7/10/03	C	NO CHANGE THIS SHEET
F.K.	6/23/05	D	REVISE NOTES AND REMOVE 3/16" TAPCONS & #14 SCREWS
J.J.	10/24/11	E	NO CHANGE THIS SHEET
Drawn By: F.K.	Date: 12/17/02	Checked By:	Date:

1070 TECHNOLOGY DRIVE
NOKOMIS, FL 34275

P.O. BOX 1529
NOKOMIS, FL 34274

PGT
Visibly Better

Description: ANCHORAGE DETAILS

Title: ALUMINUM CASEMENT WINDOW, IMPACT

Series/Model:	Scale:	Sheet:	Drawing No.	Rev:
CA-740	NTS	13 of 13	7045-8	E

PRODUCT REVISED
as complying with the Florida
Building Code
Acceptance No 11-1110.18
Expiration Date 05/22/2013
By
Miami Dade Product Control

ANTHONY LYNN MILLER
LICENSE
No. 58705
10/29/11
STATE OF
FLORIDA
PROFESSIONAL ENGINEER

A. Lynn Miller, P.E.
P.E.# 58705