MIAMI-DADE COUNTY
DEPARTMENT OF PERMITTING, ENVIRONMENT, AND REGULATORY AFFAIRS (PERA)
BOARD AND CODE ADMINISTRATION DIVISION

MIAMI-DADE COUNTY, FLORIDA
PRODUCT CONTROL SECTION
11805 SW 26 Street, Room 208
Miami, Florida 33175–2474
T (786) 315–2590 F (786) 315–2599
www.miamidade.gov/pera/

NOTICE OF ACCEPTANCE (NOA)

PGT Industries
1070 Technology Drive
Nokomis, FL 34275

SCOPE:

This NOA is being issued under the applicable rules and regulations governing the use of construction materials. The documentation submitted has been reviewed and accepted by Miami–Dade County PERA–Product Control Section to be used in Miami–Dade County and other areas where allowed by the Authority Having Jurisdiction (AHJ).

This NOA shall not be valid after the expiration date stated below. The Miami–Dade County Product Control Section (In Miami–Dade County) and/or the AHJ (in areas other than Miami–Dade County) reserve the right to have this product or material tested for quality assurance purposes. If this product or material fails to perform in the accepted manner, the manufacturer will incur the expense of such testing and the AHJ may immediately revoke, modify, or suspend the use of such product or material within their jurisdiction. PERA reserves the right to revoke this acceptance, if it is determined by Miami–Dade County Product Control Section that this product or material fails to meet the requirements of the applicable building code.

This product is approved as described herein, and has been designed to comply with the Florida Building Code, including the High Velocity Hurricane Zone.

DESCRIPTION: Series "HR–510" White PVC Horizontal Roller Window – L.M.I.

APPROVAL DOCUMENT: Drawing No. **5191–2**, titled "Vinyl Horiz. Roller Window, Impact-resistant", sheets 1 through 10 of 10, prepared by PGT Industries, dated 01/18/10, with revision "C", dated 10/17/11, signed and sealed by Anthony Lynn Miller, P. E., bearing the Miami–Dade County Product Control Revision stamp with the Notice of Acceptance number and Expiration date by the Miami–Dade County Product Control Section.

MISSILE IMPACT RATING: Large and Small Missile Impact Resistant.

LABELING: Each unit shall bear a permanent label with the manufacturer's name or logo, city, state, model/series, and following statement: "Miami–Dade County Product Control Approved", unless otherwise noted herein.

RENEWAL of this NOA shall be considered after a renewal application has been filed and there has been no change in the applicable building code negatively affecting the performance of this product.

TERMINATION of this NOA will occur after the expiration date or if there has been a revision or change in the materials, use, and/or manufacture of the product or process. Misuse of this NOA as an endorsement of any product, for sales, advertising or any other purposes shall automatically terminate this NOA. Failure to comply with any section of this NOA shall be cause for termination and removal of NOA.

ADVERTISEMENT: The NOA number preceded by the words Miami–Dade County, Florida, and followed by the expiration date may be displayed in advertising literature. If any portion of the NOA is displayed, then it shall be done in its entirety.

INSPECTION: A copy of this entire NOA shall be provided to the user by the manufacturer or its distributors and shall be available for inspection at the job site at the request of the Building Official.

This NOA **revises NOA No. 09–0901.07** and consists of this page 1 and evidence pages E–1 and E–2, as well as approval document mentioned above.

The submitted documentation was reviewed by **Jaime D. Gascon, P. E.**

MIAMI-DADE COUNTY APPROVED

J. Gascon
2/2/12

NOTICE OF ACCEPTANCE: EVIDENCE SUBMITTED

A. DRAWINGS

1. Manufacturer's die drawings and sections.
   (Submitted under NOA No. 09–0901.07)
2. Drawing No. **5191–2**, titled "Vinyl Horiz. Roller Window, Impact–resistant", sheets 1 through 10 of 10, prepared by PGT Industries, dated 01/18/10, with revision "C", dated 10/17/11, signed and sealed by Anthony Lynn Miller, P. E.

B. TESTS

1. Test reports on:
   1) Air Infiltration Test, per FBC, TAS 202–94
   2) Uniform Static Air Pressure Test, Loading per FBC, TAS 202–94
   3) Water Resistance Test, per FBC, TAS 202–94
   4) Large Missile Impact Test per FBC, TAS 201–94
   5) Cyclic Wind Pressure Loading per FBC, TAS 203–94
   6) Forced Entry Test, per FBC 2411 3.2.1 and TAS 202–94

   along with marked–up drawings and installation diagram of HR–510 vinyl horizontal sliding window (OX), prepared by Fenestration Testing Laboratory, Inc., Test Report No. **FTL–5916**, dated 06/18/09, signed and sealed by Julio E. Gonzalez, P. E.
   (Submitted under NOA No. 09–0901.07)

C. CALCULATIONS:

1. Anchor Calculations, and structural analysis, complying with FBC–2007, prepared by manufacturer, dated 08/20/09, signed and sealed by Robert L. Clark, P. E.
   (Submitted under NOA No. 09–0901.07)
2. **Glazing complies with ASTM E1300–02/ 04.**

D. QUALITY ASSURANCE

1. Miami–Dade Department of Permitting, Environment, and Regulatory Affairs (PERA)

E. MATERIAL CERTIFICATIONS

1. Notice of Acceptance No. **11–0624.02** issued to **E.I. DuPont DeNemours & Co.**, Inc. for their "**DuPont SentryGlas® Interlayer**" dated 08/25/11, expiring on 01/14/17.

F. STATEMENTS

1. Statement letter of conformance and compliance with the FBC–2007 (with the 2009 supplement) and FBC–2010, dated 10/25/11, signed and sealed by Anthony Lynn Miller, P. E.
2. Statement letter of no financial interest and independence, dated 10/25/11, signed and sealed by Anthony Lynn Miller, P. E.

Jaime D. Gascon, P. E.
Product Control Section Supervisor
NOA No. 11–1114.06
Expiration Date: February 17, 2016
Approval Date: February 09, 2012

NOTICE OF ACCEPTANCE: EVIDENCE SUBMITTED

F. STATEMENTS (CONTINUED)

3. Letter of *Adoption of as his Own, the Work of another Engineer* per Section 61G15–27.001 of the F.B.P.E., dated 10/07/11 signed and sealed by Anthony Lynn Miller, P. E.
4. Statement letter of conformance, dated 08/20/09, signed by Robert L. Clark, P. E. ***(Submitted under NOA No. 09–0901.07)***
5. Statement letter of no financial interest, dated 08/20/09, signed and sealed by Robert L. Clark, P. E. ***(Submitted under NOA No. 09–0901.07)***
6. Laboratory compliance letter for Test Report No. **FTL–5916**, issued by Fenestration Testing Laboratory, Inc., dated 06/18/09, signed and sealed by Julio E. Gonzalez, P. E. ***(Submitted under NOA No. 09–0901.07)***

G. OTHERS

1. Notice of Acceptance No. **09–0901.07**, issued to PGT Industries, Inc. for their Series HR–510 White PVC Horizontal Roller Window–L.M.I., approved on 02/17/10 and expiring on 02/17/2015.

Jaime D. Gascon, P. E.
Product Control Section Supervisor
NOA No. 11–1114.06
Expiration Date: February 17, 2016
Approval Date: February 09, 2012

Ⓐ IMPACT-RESISTANT HORIZONTAL ROLLER BOX FRAME AND INTEGRAL FIN WINDOWS

GENERAL NOTES:

1. GLAZING OPTIONS:
A: 7/8" IG -5/16" H/H - SGP + 7/16" - AIR + 1/8"A CAP
B. 7/8" IG -5/16" H/H - SGP + 7/16" - AIR + 1/8"T CAP

2. CONFIGURATIONS: XO AND OX.

3. DESIGN PRESSURES: +60/-70 PSF (ALL GLASS TYPES LISTED)
A. NEGATIVE DESIGN LOADS BASED ON TESTED PRESSURE AND GLASS TABLES ASTM E 1300-02.
B. POSITIVE DESIGN LOADS BASED ON WATER TEST PRESSURE AND GLASS TABLES ASTM E 1300-02.

4. SHUTTERS ARE NOT REQUIRED.

5. ANCHORAGE: ANCHOR SHALL BE AS LISTED AND SPACED AS SHOWN ON DETAILS. ANCHOR EMBEDMENT TO SUBSTRATE SHALL BE BEYOND WALL DRESSING OR STUCCO. THE 33 1/3% STRESS INCREASE HAS NOT BEEN USED IN THE DESIGN OF THIS PRODUCT. MATERIALS, INCLUDING BUT NOT LIMITED TO STEEL SCREWS, THAT COME INTO CONTACT WITH OTHER DISSIMILAR MATERIALS SHALL MEET THE REQUIREMENTS OF THE FLORIDA BUILDING CODE. APPROVED ANCHORS: 1, #10 STEEL SCREW (G5) 2, 3/16" ELCO ULTRACON.

6. REFERENCES: TEST REPORTS FTL-5916; ELCO TEXTRON NOA 07.0425.01; ANSI/AF&PA; NDS-2005 FOR WOOD CONSTRUCTION; ADM-2005 ALUMINUM DESIGN MANUAL.

7. THIS PRODUCT HAS BEEN DESIGNED & TESTED TO COMPLY WITH THE REQUIREMENTS OF THE FLORIDA BUILDING CODE, INCLUDING THE HIGH VELOCITY HURRICANE ZONE (HVHZ).

8. SHIM EACH ANCHOR LOCATION WHERE THE PRODUCT IS NOT FLUSH TO THE SUBSTRATE, USING SHIMS CAPABLE OF TRANSFERRING APPLIED LOADS.

9. ADHESIVE SEALANT SHALL BE USED BETWEEN SUBSTRATE AND FLANGE OR FIN. OVERALL SEALING/FLASHING STRATEGY FOR WATER RESISTANCE OF INSTALLATION SHALL BE DONE BY OTHERS.

10. MATERIALS USED FOR ANCHOR EVALUATIONS WERE SOUTHERN PINE, AND CONCRETE MASONRY UNITS COMPLYING WITH ASTM C-90.

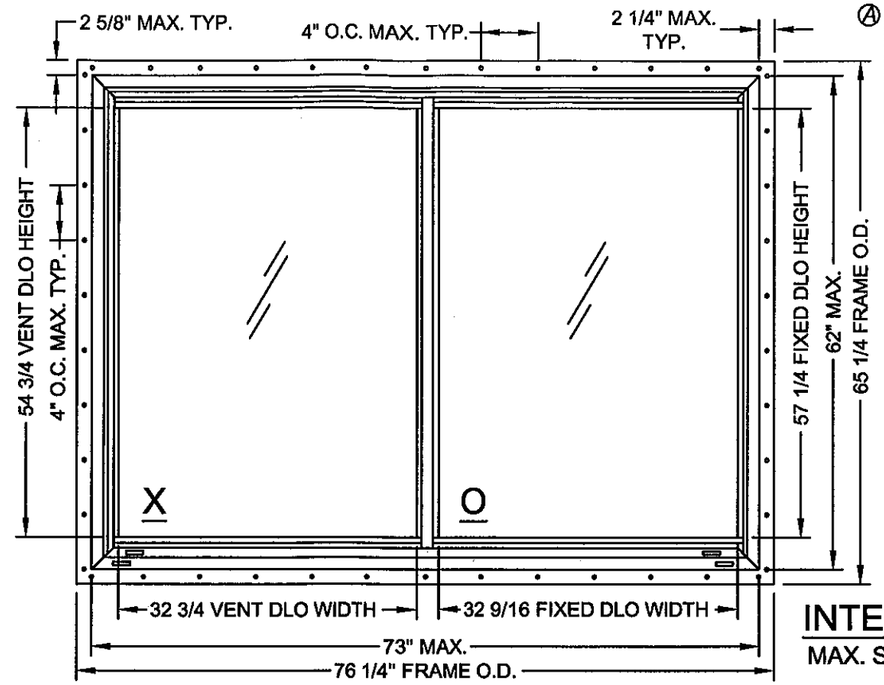

Ⓐ

Design Pressure Rating	Impact Rating
+ 60 /- 70 PSF	Large and Small Missile Impact (When using a tempered exterior glass cap)
+ 60 /- 70 PSF	Large Missile Impact Only (When using an annealed exterior glass cap)

NOA DRAWING TABLE OF CONTENTS

	SHEET
GENERAL NOTES	1
ELEVATIONS	1
GLAZING DETAILS	2-3
SECTIONS, I.F. FRAME	4
SECTIONS, BOX FRAME	5
PARTS LIST	6
EXTRUSIONS	7
ANCHORAGE SPACING, BOX FRAME	8
ANCHORAGE DETAILS, BOX FRAME	9
ANCHORAGE DETAILS, I.F. FRAME	10

INTEGRAL FIN

MAX. SIZE = 73" X 62"

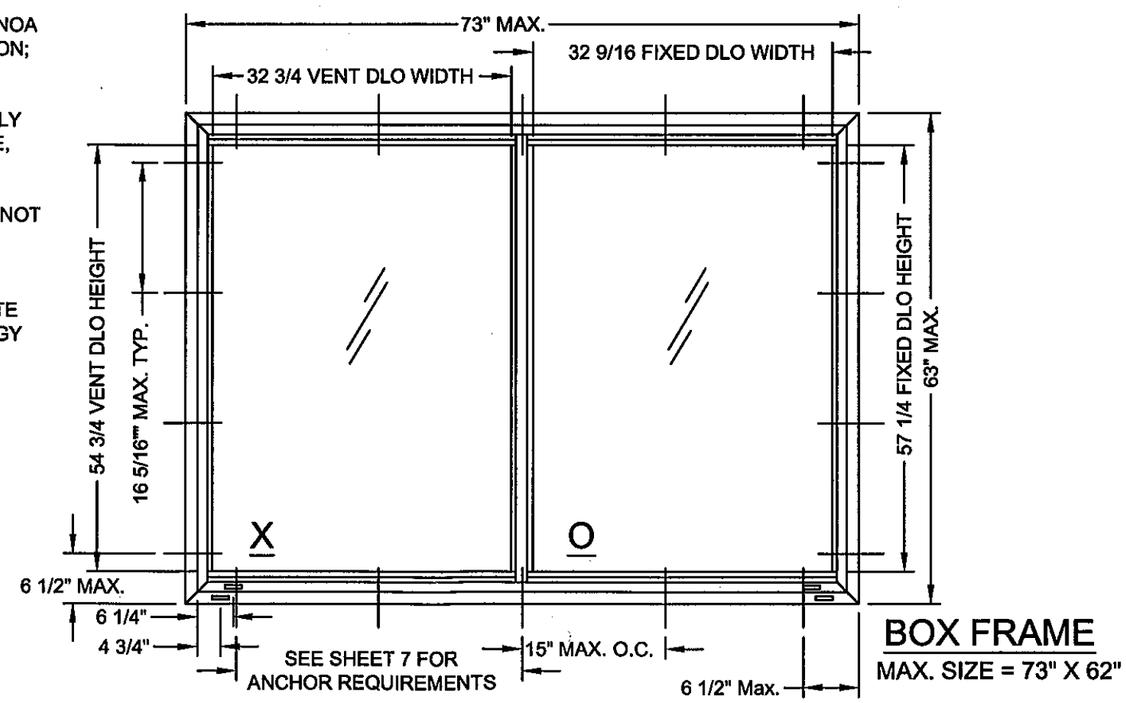

BOX FRAME

MAX. SIZE = 73" X 62"

PRODUCT REVISED
as complying with the Florida
Building Code
Acceptance No 11-1114.06
Expiration Date 02/17/2015
By
Miami Dade Product Control

ANTHONY LYNN MILLER
LICENSE
No. 58705
10/25/11
STATE OF FLORIDA
PROFESSIONAL ENGINEER
A. LYNN MILLER, P.E.
P.E.# 58705

Revsd By:	Date:	Revisions:	
J.J.	10/17/11	B	FBC 2010 CODE CHANGE
J.R.	01/18/10	A	Added DP/Impact box frame, changed title above notes.
Revsd By:	Date:	Revisions:	
Drawn By: J.R.	Date: 08/12/09	Checked By:	Date:

1070 TECHNOLOGY DRIVE
NOKOMIS, FL 34275

P.O. BOX 1529
NOKOMIS, FL 34274

PGT®

Description: ELEVATIONS & ANCHORAGE

Title: Vinyl Horiz. Roller Window, Impact-resistant

Series/Model:	Scale:	Sheet:	Drawing No.	Rev:
HR510	NTS	1 of 10	5191-2	B

Ⓐ

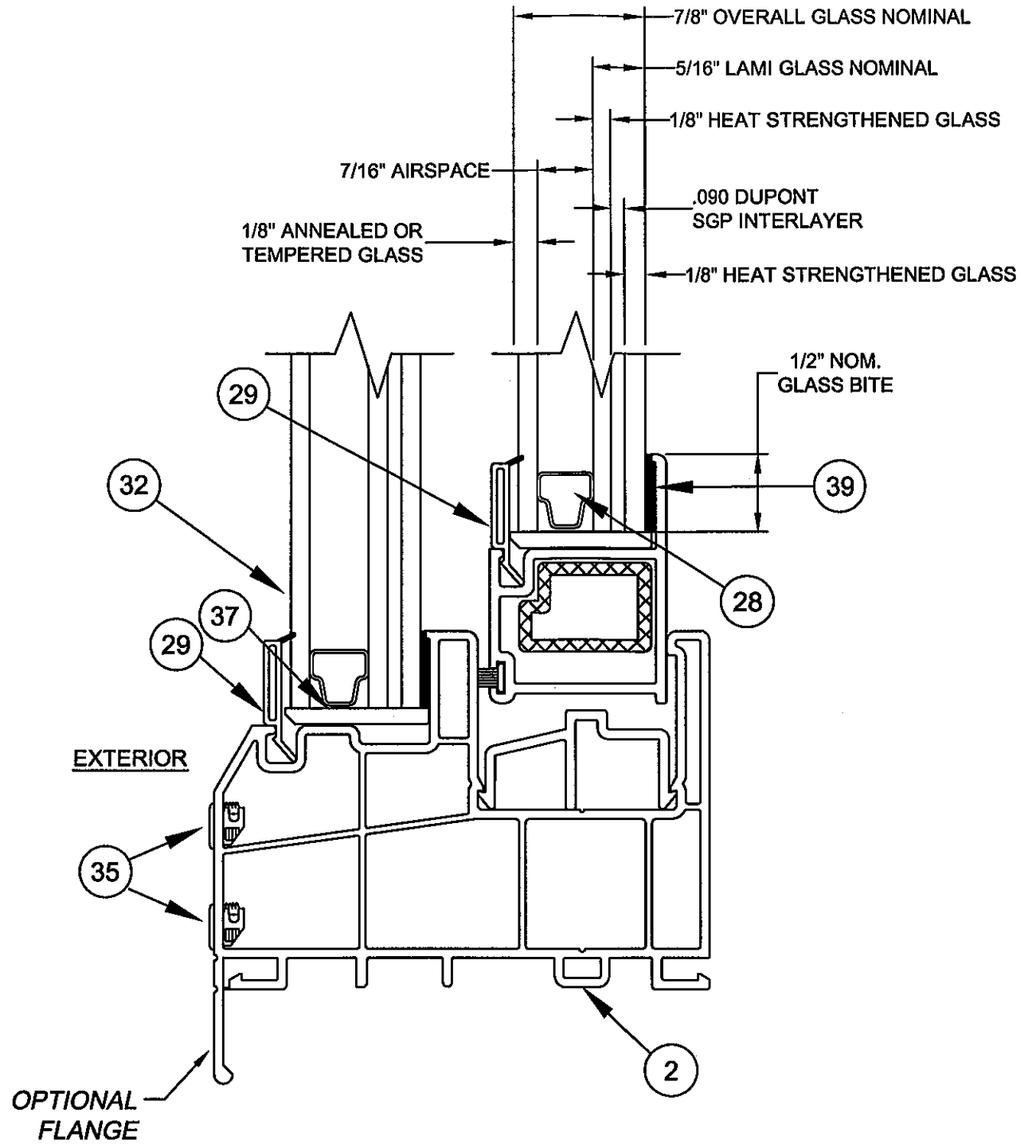

7/8" LAMI I.G. GLAZING DETAIL
WITH 5/16" LAMI GLASS AND 1/8" CAP

PRODUCT REVISED
as complying with the Florida
Building Code
Acceptance No 11-1114.06
Expiration Date 02/14/2016
By
Miami Dade Product Control

ANTHONY LYNN MILLER
LICENSE
No. 58705
10/25/11
STATE OF
FLORIDA
PROFESSIONAL ENGINEER
A. LYNN MILLER, P.E.
P.E.# 58705

Revsd By:	Date:	Revisions:	
J.J.	10/17/11	B	NO CHANGE THIS SHEET
J.R.	01/18/10	A	Changed glass make up, drawing title.
Revsd By:	Date:	Revisions:	
Drawn By: J.R.	Date: 08/12/09	Checked By:	Date:

1070 TECHNOLOGY DRIVE
NOKOMIS, FL 34275

P.O. BOX 1529
NOKOMIS, FL 34274

PGT®

Description: GLAZING DETAILS - BOX OR FLANGE FRAME

Title: Vinyl Horiz. Roller Window, Impact-resistant

Series/Model:	Scale:	Sheet:	Drawing No.	Rev:
HR510	1:1	2 of 10	5191-2	B

Ⓐ

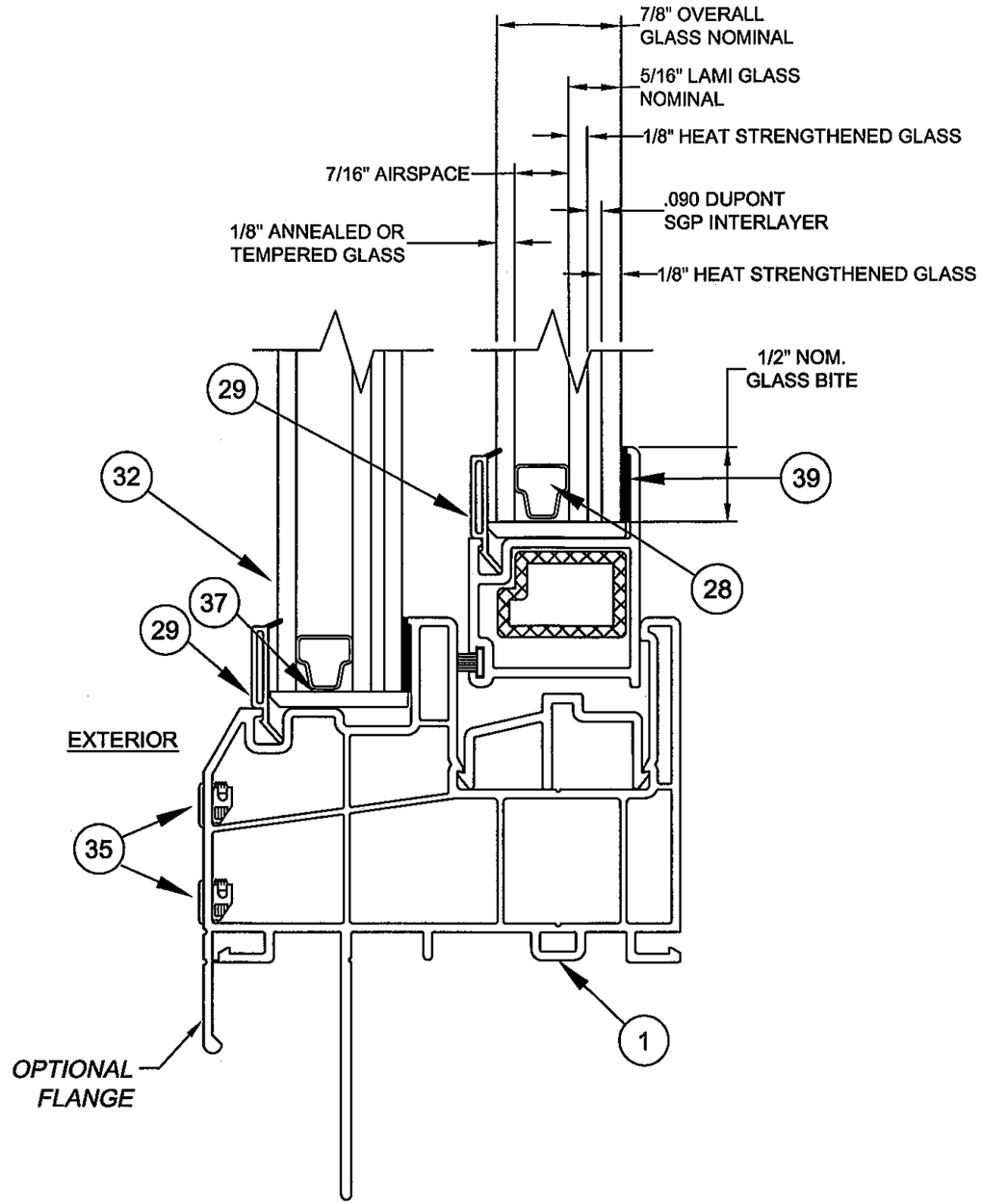

7/8" LAMI I.G. GLAZING DETAIL
WITH 5/16" LAMI GLASS AND 1/8" CAP

PRODUCT REVISED
as complying with the Florida
Building Code
Acceptance No 11-1114.06
Expiration Date 02/14/2016
By
Miami Dade Product Control

ANTHONY LYNN MILLER
LICENSE
No. 58705
10/25/11
STATE OF
FLORIDA
PROFESSIONAL ENGINEER
A. LYNN MILLER, P.E.
P.E.# 58705

Revsd By:	Date:	Revisions:	
J.J.	10/17/11	B	NO CHANGE THIS SHEET
J.R.	01/18/10	A	Changed glass make up, drawing title.
Revsd By:	Date:	Revisions:	
Drawn By: J.R.	Date: 08/12/09	Checked By:	Date:

1070 TECHNOLOGY DRIVE
NOKOMIS, FL 34275

P.O. BOX 1529
NOKOMIS, FL 34274

PGT®

Description: GLAZING DETAILS - INTEGRAL FIN FRAME

Title: Vinyl Horiz. Roller Window, Impact-resistant

Series/Model:	Scale:	Sheet:	Drawing No.	Rev:
HR510	1:1	3 of 10	5191-2	B

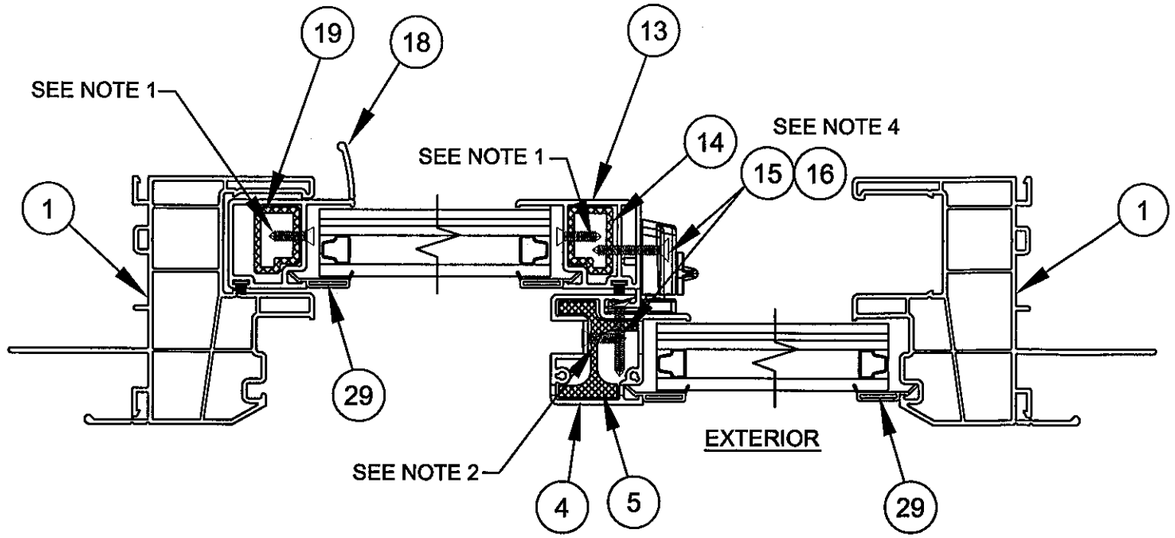

DETAIL A
LEFT JAMB SECTION

DETAIL B
MEETING RAIL SECTION

DETAIL C
RIGHT JAMB SECTION

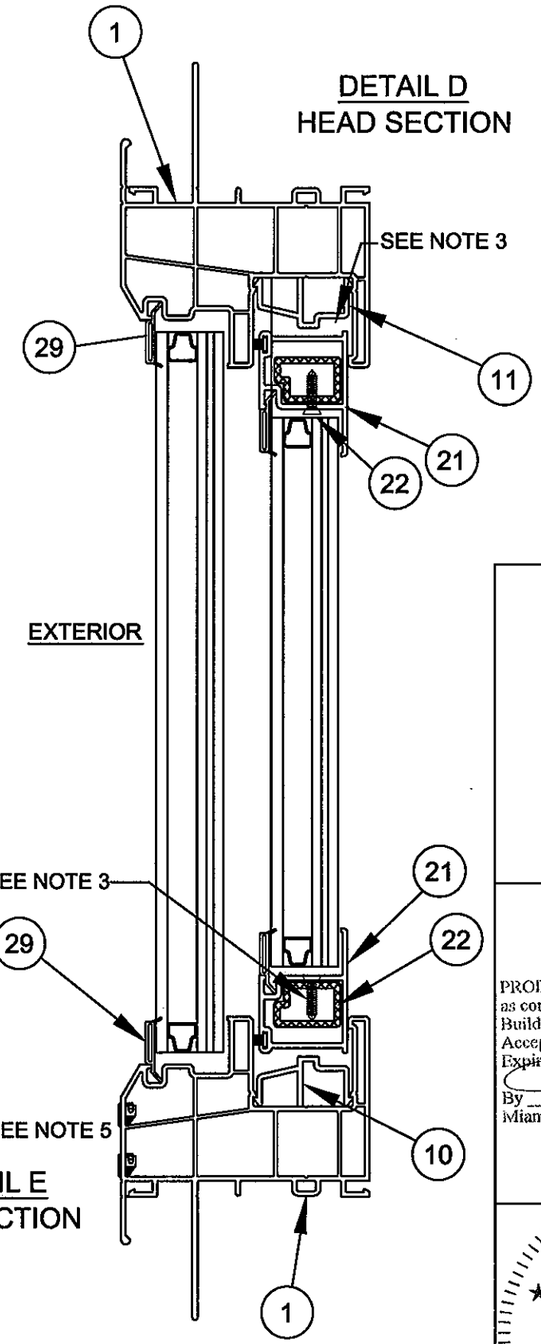

DETAIL D
HEAD SECTION

DETAIL E
SILL SECTION

NOTES:

1. #6 x 1/2 FL SMS, LOCATED AT 4 1/2" FROM EACH END AND AT 16" O.C.

2. #6 x 3/8 FL SMS, LOCATED AT 4 1/2" FROM EACH END AND AT 16" O.C.

3. #6 x 1/2 FL SMS, LOCATED AT 4 1/2" FROM EACH END.

4. CAM LOCKS:
(2) AT 7" EACH END

5. WEEPHOLES ARE 1" X 3/16". SEE SHEET 1 FOR LOCATIONS.

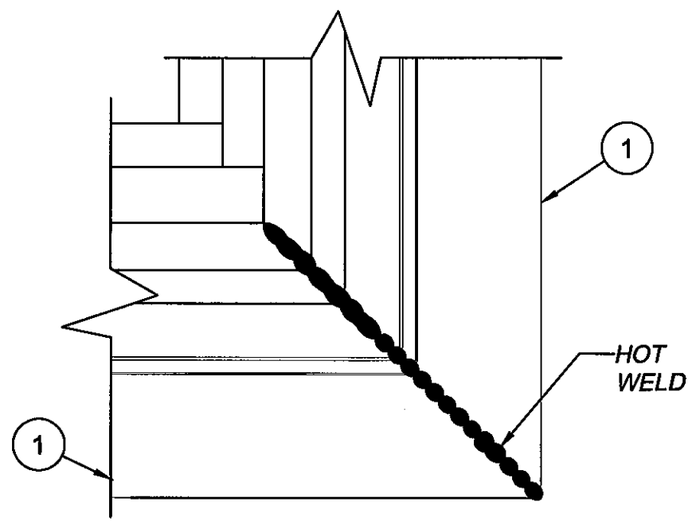

HOT WELD CORNER ASSEMBLY
(INTEGRAL FIN)

PRODUCT REVISED
as complying with the Florida
Building Code
Acceptance No 11-1114.06
Expiration Date 02/17/2016
By
Miami Dade Product Control

ANTHONY LYNN MILLER
LICENSE
No. 58705
1·25·11
STATE OF
FLORIDA
PROFESSIONAL ENGINEER
A. LYNN MILLER, P.E.
P.E.# 58705

Revsd By:	Date:	Revisions:	
J.J.	10/17/11	B	NO CHANGE THIS SHEET
J.R.	01/18/10	A	No changes this sheet.
Revsd By:	Date:	Revisions:	
Drawn By: J.R.	Date: 08/12/09	Checked By:	Date:

1070 TECHNOLOGY DRIVE
NOKOMIS, FL 34275

P.O. BOX 1529
NOKOMIS, FL 34274

PGT®

Description: CROSS SECTIONS - INTEGRAL FIN

Title: Vinyl Horiz. Roller Window, Impact-resistant

Series/Model:	Scale:	Sheet:	Drawing No.	Rev:
HR510	1:2	4 of 10	5191-2	B

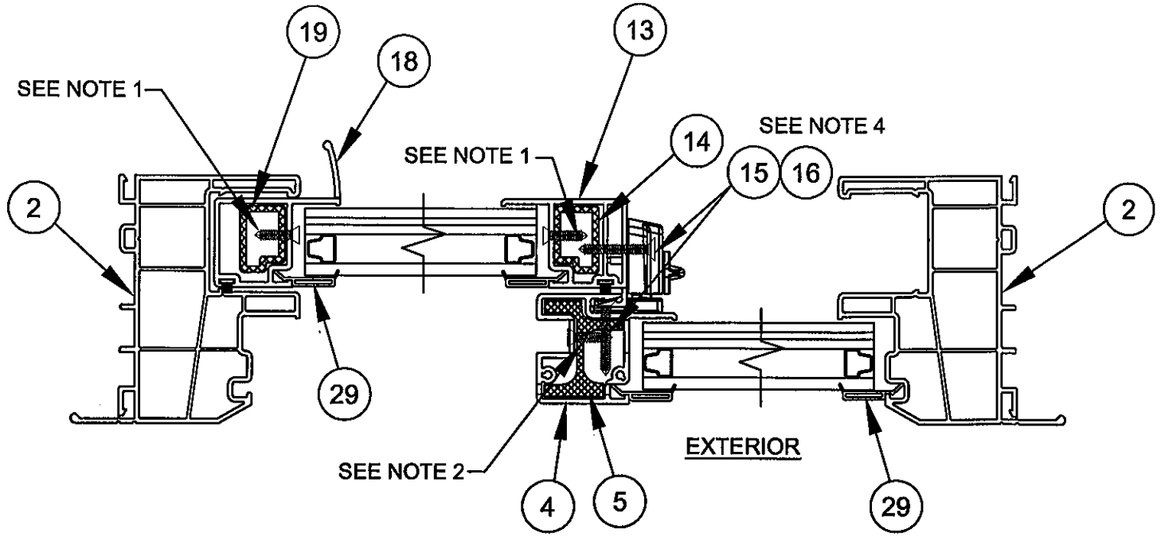

DETAIL A
LEFT JAMB SECTION

DETAIL B
MEETING RAIL SECTION

DETAIL C
RIGHT JAMB SECTION

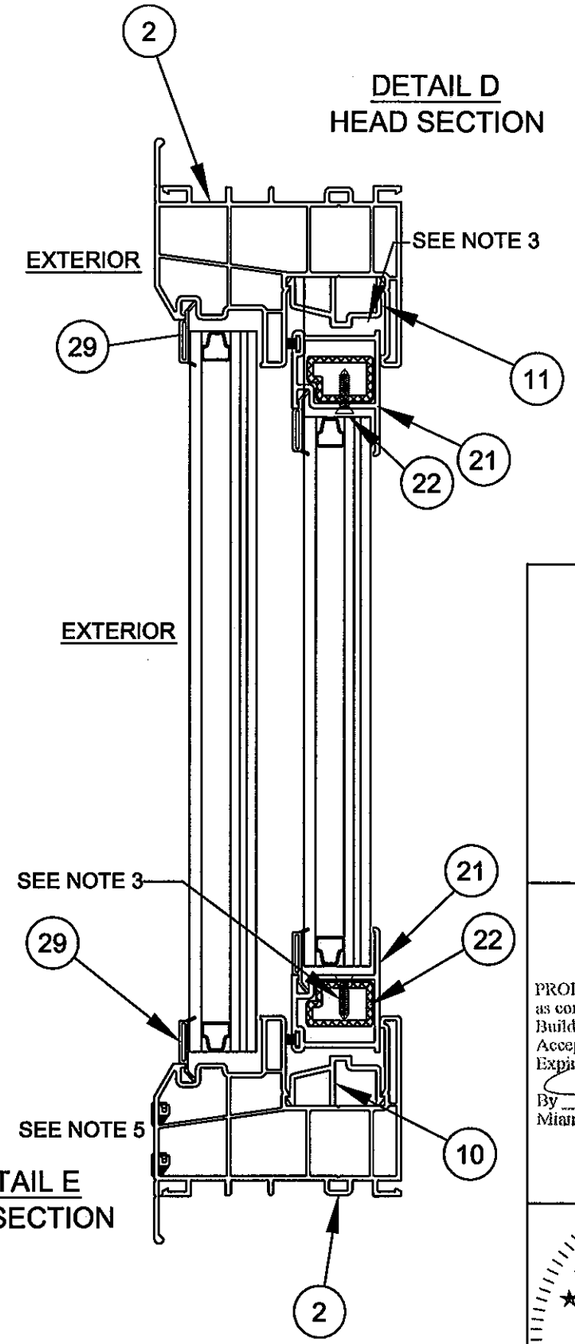

DETAIL D
HEAD SECTION

DETAIL E
SILL SECTION

NOTES:

1. #6 x 1/2 FL SMS, LOCATED AT 4 1/2" FROM EACH END AND AT 16" O.C.

2. #6 x 3/8 FL SMS, LOCATED AT 4 1/2" FROM EACH END AND AT 16" O.C.

3. #6 x 1/2 FL SMS, LOCATED AT 4 1/2" FROM EACH END.

4. CAM LOCKS:
(2) AT 7" EACH END

5. WEEPHOLES ARE 1" X 3/16". SEE SHEET 1 FOR LOCATIONS.

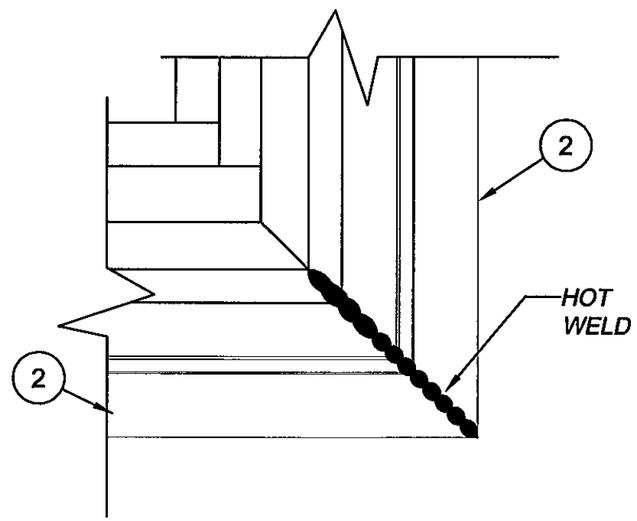

HOT WELD CORNER ASSEMBLY
(BOX FRAME)

PRODUCT REVISED
as complying with the Florida
Building Code
Acceptance No 11-1114.06
Expiration Date 02/17/2016
By
Miami Dade Product Control

ANTHONY LYNN MILLER
LICENSE
No. 58705
10/25/11
STATE OF
FLORIDA
PROFESSIONAL ENGINEER
A. LYNN MILLER, P.E.
P.E.# 58705

Revsd By:	Date:	Revisions:	
J.J.	10/17/11	B	NO CHANGE THIS SHEET
J.R.	01/18/10	A	No changes this sheet.
Revsd By:	Date:	Revisions:	
Drawn By: J.R.	Date: 08/12/09	Checked By:	Date:

1070 TECHNOLOGY DRIVE
NOKOMIS, FL 34275

P.O. BOX 1529
NOKOMIS, FL 34274

PGT®

Description: CROSS SECTIONS - BOX FRAME

Title: Vinyl Horiz. Roller Window, Impact-resistant

Series/Model:	Scale:	Sheet:	Drawing No.	Rev:
HR510	1:2	5 of 10	5191-2	B

Ⓐ

ITEM	DWG NO.	PART #	DESCRIPTION	QTY
1	5166	65166	FRAME HEAD, SILL AND JAMBS (FIN ONLY)	4
2	5189	65189	FRAME HEAD, SILL AND JAMBS (BOX ONLY)	4
4	5102	65102	FIXED MEETING RAIL	1
5	5123	65123	FIXED MEETING RAIL - ALUMINUM REINF.	1
6		76X1FPAW	6 x 1" FH TECH (CAM LOCK, KEEPER)	4
8		78X312PPABX	SCR. 8X3 1/2" PP TYPE AB (FIXED MR)	4
9		71669SP	330025 ALUM SCREW SUPPORT PLATES	2
10	5138	65138	ROLLER TRACK	1
11	5138	65138	ANTI LIFT	2
12		71038W	INSTALLATION HOLE PLUGS (BOX ONLY)	VARIES
13	5105	65105	SASH INTERLOCK RAIL	1
14	5114	65114	INTERLOCK RAIL - ALUMINUM REINF.	1
15		76208SLAW	CAM SWEEP LOCKS	2
16		76133SLKW	CAM SWEEP LOCK KEEPER	2
17	1644	61644W	WSTP. .187 x .270 FIN SEAL	1
18	5137	65137	SASH SIDE RAIL	1
19	5114	65114	SIDE RAIL - ALUMINUM REINF.	1
20	1644	61644W	WSTP. .187 x .270 FIN SEAL	1
21	5106	65106	SASH TOP & BOTTOM RAIL	2
22	5114	65114	TOP & BOTTOM RAIL - ALUMINUM REINF.	2
23	1644	61644W	WSTP. .187 x .270 FIN SEAL	2
24	225-1	42112HD	ROLLER HOUSING	2
25		7BRWHL2	BRASS WHEELS	4
26		7612FW	6 x 1/2 FH PHIL #2PT S/D/S	VARIES
27		7638FW	7 x 3/8 FH PHIL #2PT S/D/S	VARIES
28A		6SWIGK716	7/16" SUPER-SPACER	-
28B		6SWIGK38	3/8" SUPER-SPACER	-
29A	5112	65112	GLAZING BEAD, 1-LITE	-
32A			7/8" LAMI I.G. GLASS: 1/8" TEMPERED OUTBOARD - AIRSPACE - 1/8" ANNEALED - .090 PVB INTERLAYER - 1/8" ANNEALED (5/16" LAMI)	-
32B			7/8" LAMI I.G. GLASS: 1/8" ANNEALED OUTBOARD - AIRSPACE - 1/8" ANNEALED - .090 PVB INTERLAYER - 1/8" ANNEALED (5/16" LAMI)	-
34			SCREEN	1
35			WEEP COVERS	4
37			SETTING BLOCK	-
39			SILICONE DOW 1199	-
40				

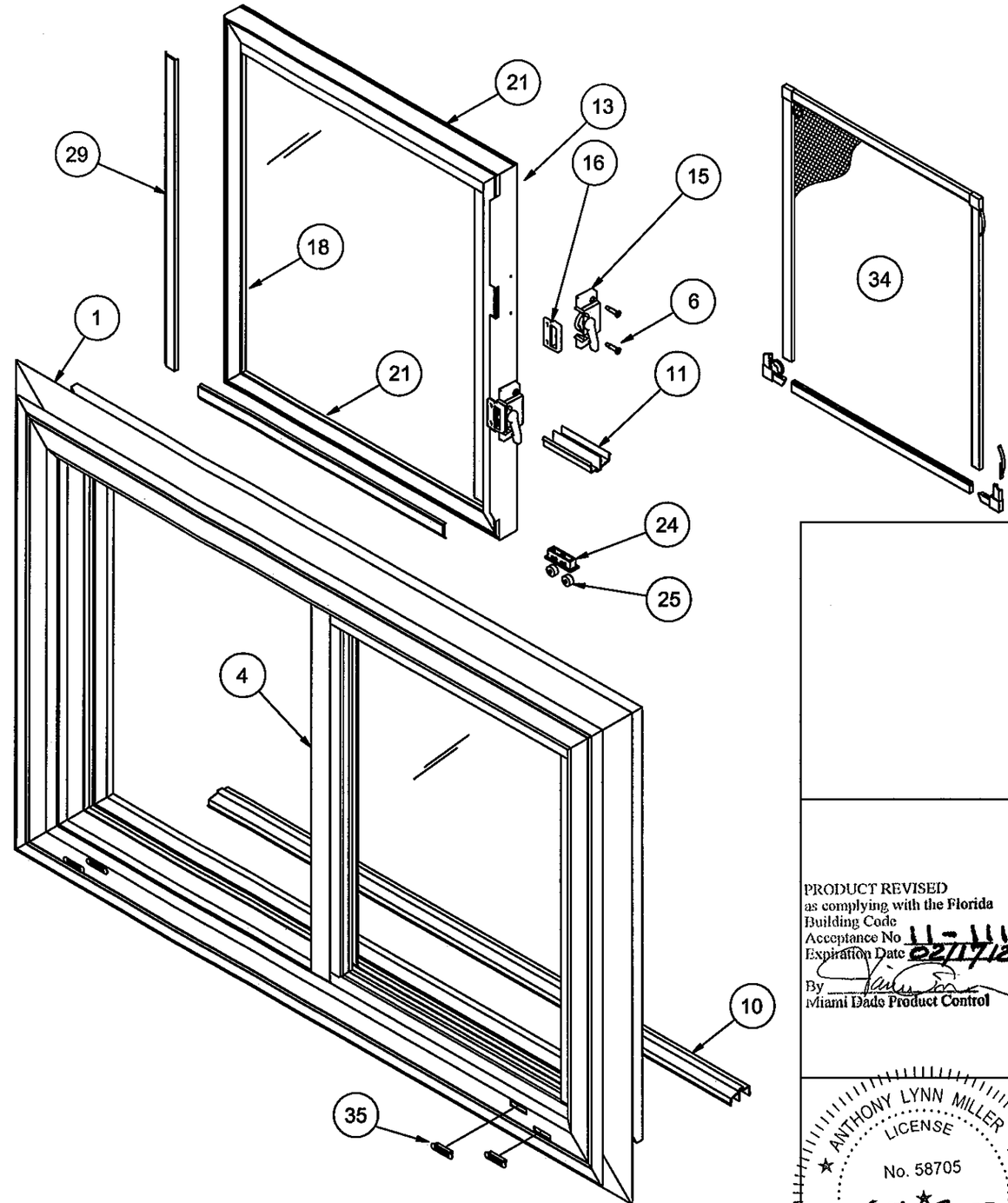

PRODUCT REVISED
as complying with the Florida
Building Code
Acceptance No 11-1114.06
Expiration Date 02/17/2016
By
Miami Dade Product Control

ANTHONY LYNN MILLER
LICENSE
No. 58705
STATE OF
FLORIDA
PROFESSIONAL ENGINEER
A. LYNN MILLER, P.E.
P.E.# 58705

Revsd By:	Date:	Revisions:	
J.J.	10/17/11	B	NO CHANGE THIS SHEET
J.R.	01/18/10	A	Removed 3/4" glass and beading from BOM.
Revsd By:	Date:	Revisions:	
Drawn By: J.R.	Date: 08/12/09	Checked By:	Date:

1070 TECHNOLOGY DRIVE
NOKOMIS, FL 34275

P.O. BOX 1529
NOKOMIS, FL 34274

Description: BOM & EXPLODED VIEW

Title: Vinyl Horiz. Roller Window, Impact-resistant

Series/Model:	Scale:	Sheet:	Drawing No.	Rev:
HR510	NTS	6 of 10	5191-2	B

Ⓐ

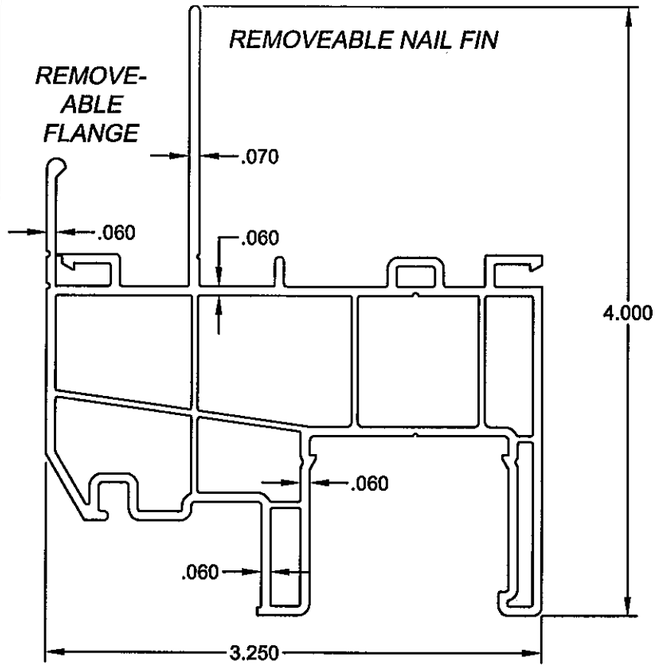

I.F.FRAME
(1) DWG #5116
RIGID PVC

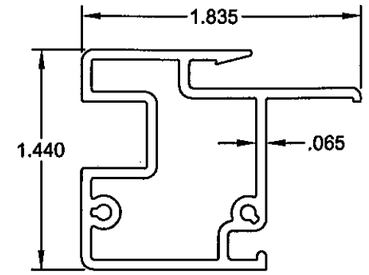

FIXED MEETING RAIL
(4) DWG #5102
RIGID PVC

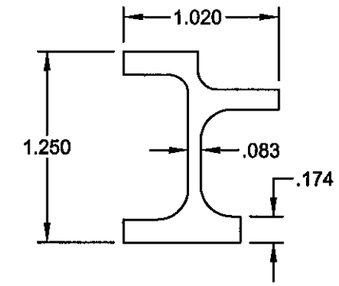

FIXED MEETING RAIL
REINFORCEMENT
(5) DWG #5123
Al 6005-T6

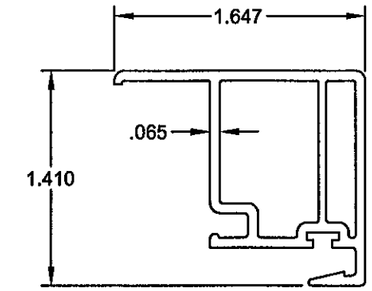

SASH INTERLOCK RAIL
(13) DWG #5105
RIGID PVC

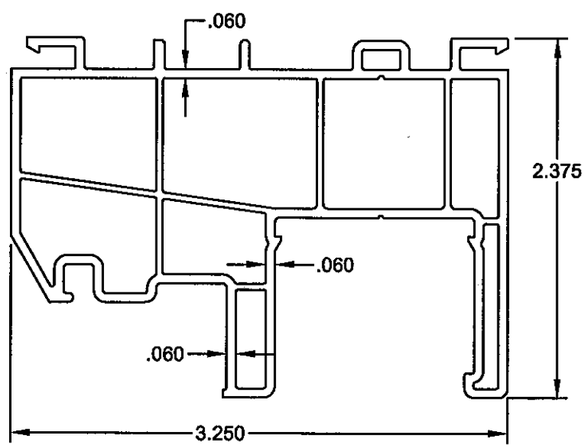

BOX FRAME
(2) DWG #5189
RIGID PVC

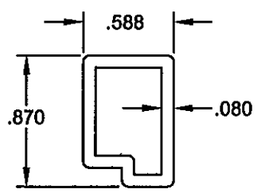

SASH INTERLOCK RAIL
REINFORCEMENT
(14)(19)(22) DWG #5114
Al 6063-T6

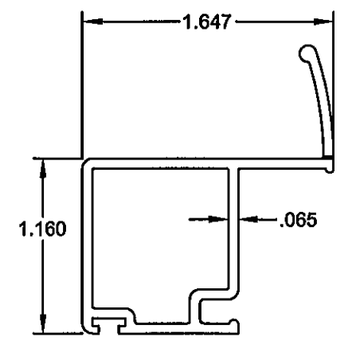

SASH SIDE RAIL
(18) DWG #65137
RIGID PVC

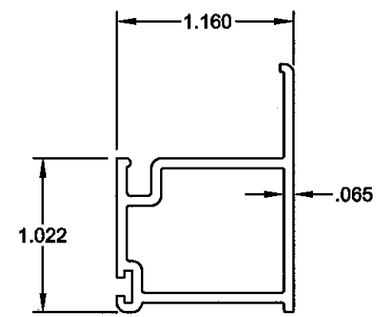

SASH TOP/BOTTOM RAIL
(21) DWG #65106
RIGID PVC

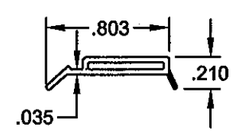

I.G. BEAD
(29A) DWG #5112
DUAL PVC

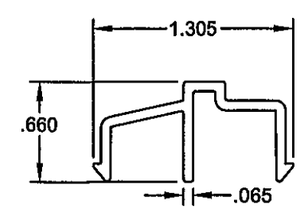

ROLLER TRACK /ANTI LIFT
(10) DWG #5138
RIGID PVC

PRODUCT REVISED
as complying with the Florida
Building Code
Acceptance No 11-1114.06
Expiration Date 02/17/2016
By
Miami Dade Product Control

ANTHONY LYNN MILLER
LICENSE
No. 58705
10/25/11
STATE OF
FLORIDA
PROFESSIONAL ENGINEER
A. LYNN MILLER, P.E.
P.E.# 58705

Revsd By:	Date:	Revisions:	
J.J.	10/17/11	B	NO CHANGE THIS SHEET
J.R.	01/18/10	A	Added wall thickness to all extrusions, removed
Revsd By:	Date:	Revisions:	beading for 3/4" glass.
Drawn By: J.R.	Date: 08/12/09	Checked By:	Date:

1070 TECHNOLOGY DRIVE
NOKOMIS, FL 34275

P.O. BOX 1529
NOKOMIS, FL 34274

PGT®

Description: EXTRUSION CROSS SECTIONS

Title: Vinyl Horiz. Roller Window, Impact-resistant

Series/Model:	Scale:	Sheet:	Drawing No.	Rev:
HR510	1:1	7 of 10	5191-2	B

HEAD, SILL AND JAMB ANCHOR QUANTITIES FOR DESIGN PRESSURES OF +60/-70 PSF OR LESS

		WINDOW HEIGHT (in)							
		24	30	36	42	48	54	60	63
WINDOW WIDTH (in)	ANCHOR LOCATION	# OF ANCHORS REQUIRED (TYPE 1 OR 2)							
24	Head and Sill	2	2	2	2	2	2	2	2
	Jamb	2	3	3	3	4	4	5	5
36	Head and Sill	3	3	3	3	3	3	3	3
	Jamb	2	3	3	3	4	4	5	5
42	Head and Sill	3	3	3	3	3	3	3	3
	Jamb	2	3	3	3	4	4	5	5
48	Head and Sill	4	4	4	4	4	4	4	4
	Jamb	2	3	3	3	4	4	5	5
54	Head and Sill	4	4	4	4	4	4	4	4
	Jamb	2	3	3	3	4	4	5	5
60	Head and Sill	5	5	5	5	5	5	5	5
	Jamb	2	3	3	3	4	4	5	5
66	Head and Sill	5	5	5	5	5	5	5	5
	Jamb	2	3	3	3	4	4	5	5
72	Head and Sill	5	5	5	5	5	5	6	6
	Jamb	2	3	3	3	4	4	5	5
73	Head and Sill	5	5	5	5	5	5	6	6
	Jamb	2	3	3	3	4	4	5	5

ANCHORAGE NOTES FOR BOX FRAME:

Ⓐ 1. ANCHOR TYPES: 1 - 3/16" ULTRACONS BY ELCO (FOR MASONRY SUBSTRATES) MINIMUM EDGE DISTANCE OF 1".
2 - #10 SM SCREWS, GRADE5 (FOR METAL AND WOOD SUBSTRATES) MINIMUM EDGE DISTANCE OF 3/8".

2. ANCHOR LOCATIONS ARE BASED ON THE FOLLOWIING DIMENSIONS.
6.5" MAX. FROM ALL CORNERS
JAMBS - 16.3125" MAX. O.C.
HEAD/SILL - 15" MAX. O.C.

3. INSTALL PER THE ADJACENT TABLE ANCHOR QUANTITIES USING THE DIMENSIONAL CRITERIA OF NOTE 2.

4. ANCHORAGE SHOWN FOR BOX FRAME WITH OR WITHOUT OPTIONAL FLANGE.

5. FOR INTEGRAL NAIL FIN FRAME ANCHORAGE, SEE SHEET 1 & 10.

PRODUCT REVISED
as complying with the Florida
Building Code
Acceptance No 11-1114.06
Expiration Date 02/17/2016
By
Miami Dade Product Control

ANTHONY LYNN MILLER
LICENSE
No. 58705
10/25/11
STATE OF
FLORIDA
PROFESSIONAL ENGINEER
A. LYNN MILLER, P.E.
P.E.# 58705

NOTE: FOR VIEW WINDOW THE LARGEST CAN NOT EXCEED THE TESTED SIZE.

Revsd By:	Date:	Revisions:	
J.J.	10/17/11	B	NO CHANGE THIS SHEET
J.R.	01/18/10	A	Added additional anchor information.
Revsd By:	Date:	Revisions:	
Drawn By: J.R.	Date: 08/12/09	Checked By:	Date:

1070 TECHNOLOGY DRIVE
NOKOMIS, FL 34275

P.O. BOX 1529
NOKOMIS, FL 34274

PGT®

Description: ANCHOR CHARTS
Title: Vinyl Horiz. Roller Window, Impact-resistant

Series/Model:	Scale:	Sheet:	Drawing No.	Rev:
HR510	NTS	8 of 10	5191-2	B

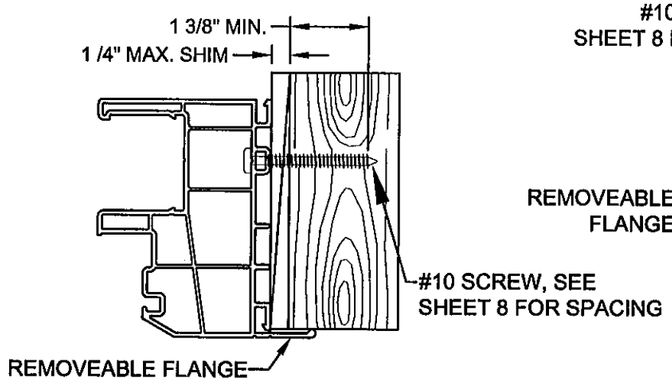

JAMB W/ BOX FRAME
THROUGH FRAME INTO 2x WOOD

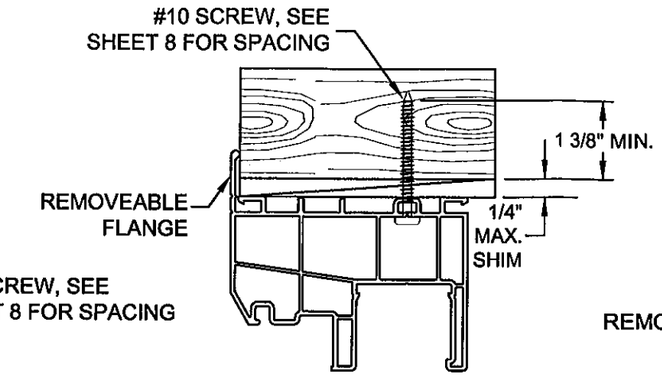

HEAD W/ BOX FRAME
THROUGH FRAME INTO 2x WOOD

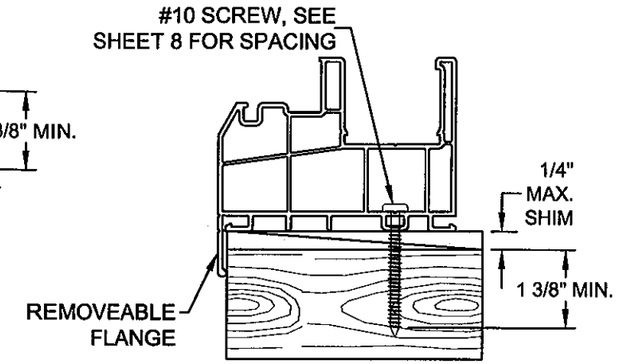

SILL W/ BOX FRAME
THROUGH FRAME INTO 2x WOOD

NOTE: INSTALLATION TO THE SUBSTRATE OF 1x OR 2x WOOD BUCKS TO BE ENGINEERED BY OTHERS

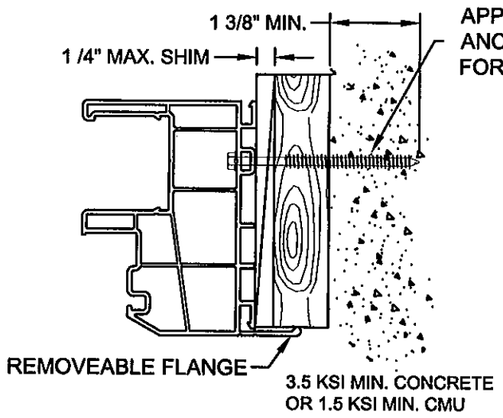

JAMB W/ BOX FRAME
THROUGH FRAME INTO CONCRETE
1x BUCK OPTIONAL

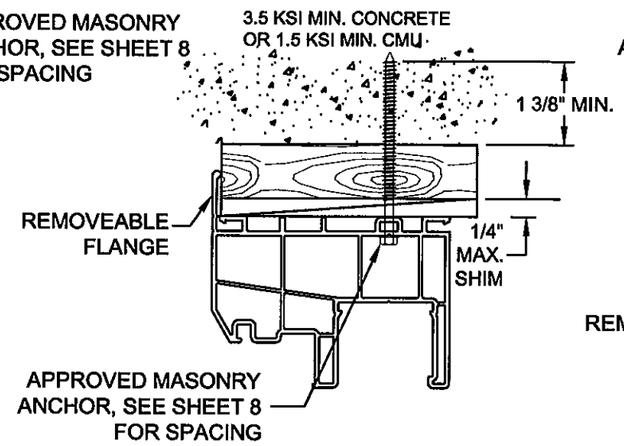

HEAD W/ BOX FRAME
THROUGH FRAME INTO CONCRETE
1x BUCK OPTIONAL

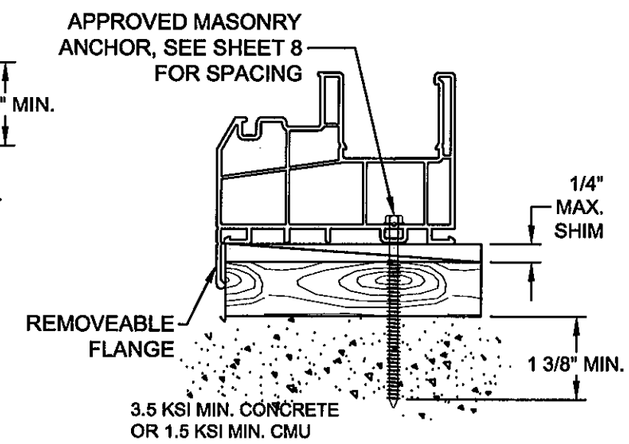

SILL W/ BOX FRAME
THROUGH FRAME INTO CONCRETE
1x BUCK OPTIONAL

NOTES:

1. FOR CONCRETE APPLICATIONS IN MIAMI-DADE COUNTY, USE ONLY MIAMI-DADE COUNTY APPROVED 3/16" ULTRACON, EMBEDED 1 3/8" MIN., DISTANCE FROM ANCHOR TO CONCRETE EDGE IS 1" MINIMUM.
2. FOR WOOD APPLICATIONS IN MIAMI-DADE COUNTY, USE #10 STEEL SCREW, EMBEDED 1 3/8" MIN..
3. WOOD BUCKS DEPICTED IN THE SECTIONS ON THIS PAGE AS 1x ARE BUCKS WHOSE TOTAL THICKNESS IS LESS THAN 1 1/2". 1x WOOD BUCKS ARE OPTIONAL IF UNIT CAN BE INSTALLED DIRECTLY TO SOLID CONCRETE. WOOD BUCKS DEPICTED AS 2x ARE 1 1/2" THICK OR GREATER. INSTALLATION TO THE SUBSTRATE OF WOOD BUCKS TO BE ENGINEERED BY OTHERS OR AS APPROVED BY AUTHORITY HAVING JURISDICTION.
4. FOR ATTACHMENT TO ALUMINUM: THE MATERIAL SHALL BE A MINIMUM STRENGTH OF 6063-T5 AND A MINIMUM OF 1/8" THICK. THE ALUMINUM STRUCTURAL MEMBER SHALL BE OF A SIZE TO PROVIDE FULL SUPPORT TO THE WINDOW FRAME SIMILAR TO THAT SHOWN IN THESE DETAILS FOR 2x WOOD BUCKS. THE ANCHOR SHALL BE A #10 SHEET METAL SCREW WITH FULL ENGAGEMENT INTO THE ALUMINUM. IF THESE CRITERIA ARE MET, THE RESPECTIVE DESIGN PRESSURES AND ANCHORAGE SPACING FOR ULTRACONS MAY BE USED.

PRODUCT REVISED
as complying with the Florida
Building Code
Acceptance No 11-1114.06
Expiration Date 02/17/2016
By
Miami Dade Product Control

ANTHONY LYNN MILLER
LICENSE
No. 58705
10/25/11
STATE OF FLORIDA
PROFESSIONAL ENGINEER
A. LYNN MILLER, P.E.
P.E.# 58705

Revsd By:	Date:	Revisions:	
J.J.	10/17/11	B	NO CHANGE THIS SHEET
J.R.	01/18/10	A	No changes this sheet.
Revsd By:	Date:	Revisions:	
Drawn By: J.R.	Date: 08/12/09	Checked By:	Date:

1070 TECHNOLOGY DRIVE
NOKOMIS, FL 34275

P.O. BOX 1529
NOKOMIS, FL 34274

PGT®

Description: INSTALLATION DETAILS-BOX/FLANGE FRAME

Title: Vinyl Horiz. Roller Window, Impact-resistant

Series/Model:	Scale:	Sheet:	Drawing No.	Rev:
HR510	1:2	9 of 10	5191-2	B

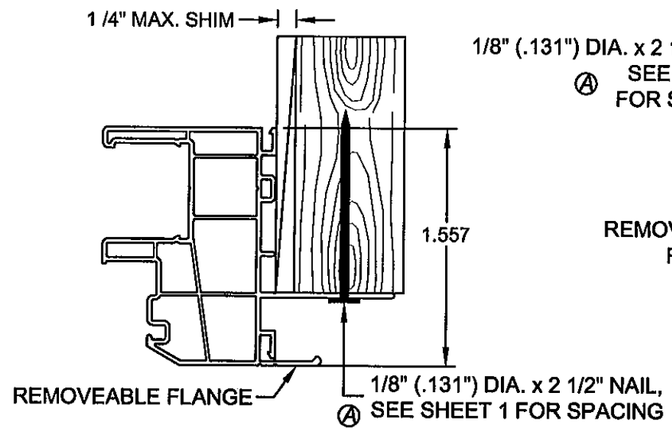

JAMB W/ NAIL FIN
THRU NAIL FIN INTO WOOD FRAMING

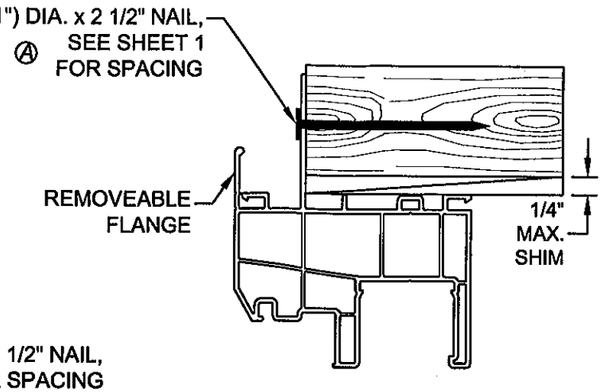

HEAD W/ NAIL FIN
THRU NAIL FIN INTO WOOD FRAMING

NOTE: INSTALLATION TO THE SUBSTRATE OF 1x OR 2x WOOD BUCKS TO BE ENGINEERED BY OTHERS

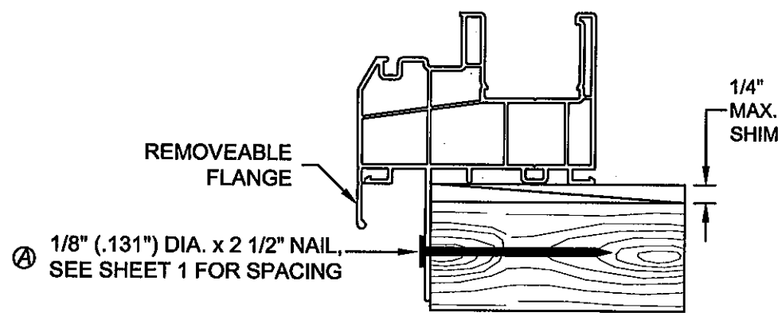

SILL W/ NAIL FIN
THRU NAIL FIN INTO WOOD FRAMING

NOTES: Ⓐ

1. FOR INTEGRAL FIN APPLICATIONS IN MIAMI-DADE COUNTY, USE 1/8" (.131") DIA. x 2 1/2" NAIL.
2. WOOD BUCKS DEPICTED IN THE SECTIONS ON THIS PAGE AS 1x ARE BUCKS WHOSE TOTAL THICKNESS IS LESS THAN 1 1/2". 1x WOOD BUCKS ARE OPTIONAL IF UNIT CAN BE INSTALLED DIRECTLY TO SOLID CONCRETE. WOOD BUCKS DEPICTED AS 2x ARE 1 1/2" THICK OR GREATER. INSTALLATION TO THE SUBSTRATE OF WOOD BUCKS TO BE ENGINEERED BY OTHERS OR AS APPROVED BY AUTHORITY HAVING JURISDICTION.
3. FOR ATTACHMENT TO ALUMINUM: THE MATERIAL SHALL BE A MINIMUM STRENGTH OF 6063-T5 AND A MINIMUM OF 1/8" THICK. THE ALUMINUM STRUCTURAL MEMBER SHALL BE OF A SIZE TO PROVIDE FULL SUPPORT TO THE WINDOW FRAME SIMILAR TO THAT SHOWN IN THESE DETAILS FOR 2x WOOD BUCKS. THE ANCHOR SHALL BE A #10 SHEET METAL SCREW WITH FULL ENGAGEMENT INTO THE ALUMINUM. IF THESE CRITERIA ARE MET, THE RESPECTIVE DESIGN PRESSURES AND ANCHORAGE SPACING FOR ULTRACONS MAY BE USED.

PRODUCT REVISED
as complying with the Florida
Building Code
Acceptance No 11-1114.06
Expiration Date 02/17/2016
By
Miami Dade Product Control

ANTHONY LYNN MILLER
LICENSE
No. 58705
STATE OF FLORIDA
PROFESSIONAL ENGINEER
A. LYNN MILLER, P.E.
P.E.# 58705

Revsd By:	Date:	Revisions:	
J.J.	10/17/11	B	NO CHANGE THIS SHEET
J.R.	01/18/10	A	Corrected nail length to 2-1/2", added dia. in decimal.
Revsd By:	Date:	Revisions:	
Drawn By: J.R.	Date: 08/12/09	Checked By:	Date:

1070 TECHNOLOGY DRIVE
NOKOMIS, FL 34275

P.O. BOX 1529
NOKOMIS, FL 34274

PGT®

Description: INSTALLATION DETAILS - INT. FIN FRAME

Title: Vinyl Horiz. Roller Window, Impact-resistant

Series/Model:	Scale:	Sheet:	Drawing No.	Rev:
HR510	1:2	10 of 10	5191-2	B