MIAMI-DADE COUNTY
DEPARTMENT OF PERMITTING, ENVIRONMENT, AND REGULATORY AFFAIRS (PERA)
BOARD AND CODE ADMINISTRATION DIVISION

MIAMI–DADE COUNTY, FLORIDA
PRODUCT CONTROL SECTION
11805 SW 26th Street, Room 208
Miami, Florida 33175–2474
T (786) 315–2590 F (786) 315–2599
www.miamidade.gov/pera/

NOTICE OF ACCEPTANCE (NOA)

PGT Industries, Inc.
1070 Technology Drive
North Venice, FL 34275

SCOPE:

This NOA is being issued under the applicable rules and regulations governing the use of construction materials. The documentation submitted has been reviewed and accepted by Miami–Dade County PERA –Product Control Section to be used in Miami–Dade County and other areas where allowed by the Authority Having Jurisdiction (AHJ).

This NOA shall not be valid after the expiration date stated below. The Miami–Dade County Product Control Section (In Miami–Dade County) and/ or the AHJ (in areas other than Miami–Dade County) reserve the right to have this product or material tested for quality assurance purposes. If this product or material fails to perform in the accepted manner, the manufacturer will incur the expense of such testing and the AHJ may immediately revoke, modify, or suspend the use of such product or material within their jurisdiction. PERA reserves the right to revoke this acceptance, if it is determined by Miami–Dade County Product Control Section that this product or material fails to meet the requirements of the applicable building code.

This product is approved as described herein, and has been designed to comply with the Florida Building Code, including the High Velocity Hurricane Zone.

DESCRIPTION: Series "PW–3020 Picture" Aluminum Fixed Window – L.M.I.

APPROVAL DOCUMENT: Drawing No. **3020–3** titled "Aluminum Picture Window, LMI", sheets 1 through 7 of 7, prepared by manufacturer, dated 12/15/07 with the latest revision "**B**" dated 11/19/11, prepared by PGT Industries, Inc., signed and sealed by Anthony Lynn Miller, P. E., bearing the Miami–Dade County Product Control Revision stamp with the Notice of Acceptance number and Expiration date by the Miami–Dade County Product Control Section.

MISSILE IMPACT RATING: Large and Small Missile Impact Resistant.

LABELING: Each unit shall bear a permanent label with the manufacturer's name or logo, city, state, model/ series and following statement: "Miami–Dade County Product Control Approved" unless otherwise noted herein.

RENEWAL of this NOA shall be considered after a renewal application has been filed and there has been no change in the applicable building code negatively affecting the performance of this product.

TERMINATION of this NOA will occur after the expiration date or if there has been a revision or change in the materials, use, and/or manufacture of the product or process. Misuse of this NOA as an endorsement of any product, for sales, advertising or any other purposes shall automatically terminate this NOA. Failure to comply with any section of this NOA shall be cause for termination and removal of NOA.

ADVERTISEMENT: The NOA number preceded by the words Miami–Dade County, Florida, and followed by the expiration date may be displayed in advertising literature. If any portion of the NOA is displayed, then it shall be done in its entirety.

INSPECTION: A copy of this entire NOA shall be provided to the user by the manufacturer or its distributors and shall be available for inspection at the job site at the request of the Building Official.

This NOA **revises NOA No. 09–0901.08** and consists of this page 1, evidence pages E–1 and E–2, as well as approval document mentioned above.

The submitted documentation was reviewed by **Jaime D. Gascon, P. E.**

MIAMI-DADE COUNTY APPROVED

J. Gascon
2/8/12

NOTICE OF ACCEPTANCE: EVIDENCE SUBMITTED

A. DRAWINGS

1. Manufacturer's die drawings and sections.
   (Submitted under NOA's No. 07–0613.02)
2. Drawing No. **3020–3** titled "Aluminum Picture Window, LMI", sheets 1 through 7 of 7, prepared by manufacturer, dated 12/15/07 with the latest revision "**B**" dated 11/19/11, prepared by PGT Industries, Inc., signed and sealed by Anthony Lynn Miller, P. E.

B. TESTS

1. Test reports on: 1) Air Infiltration Test, per FBC, TAS 202–94
   2) Uniform Static Air Pressure Test, Loading per FBC TAS 202–94
   3) Water Resistance Test, per FBC, TAS 202–94
   4) Small Missile Impact Test per FBC, TAS 201–94
   5) Cyclic Wind Pressure Loading per FBC, TAS 203–94

   Along with marked–up drawings and installation diagram of an aluminum fixed window, prepared by Architectural Testing, Inc., Test Report No. **ATI–72150.01–401–18**, dated 07/23/07 signed and sealed by Joseph A. Reed, P. E.
   (Submitted under NOA No. 07–0613.02)

C. CALCULATIONS

1. Anchor verification calculations and structural analysis, complying with FBC, prepared by PGT Industries, Inc., dated 04/16/07, signed and sealed by Robert L. Clark, P. E.
   (Submitted under previous NOA No. 09–0901.08)
2. **Complies with ASTM E1300–98/ 04**

D. QUALITY ASSURANCE

1. Miami–Dade Department of Permitting, Environment, and Regulatory Affairs (PERA)

E. MATERIAL CERTIFICATIONS

1. Notice of Acceptance No. **11–0624.02** issued to **E.I. DuPont DeNemours & Co.**, Inc. for their "**DuPont SentryGlas® Interlayer**" dated 08/25/11, expiring on 01/14/17.

F. STATEMENTS

1. Statement letter of conformance and compliance with the FBC–2007 (with the 2009 supplement) and FBC–2010, dated 10/26/11, signed and sealed by Anthony Lynn Miller, P. E.

Jaime D. Gascon, P. E.
Product Control Section Supervisor
NOA No. 11–1114.16
Expiration Date: August 16, 2012
Approval Date: February 16, 2012

F. STATEMENTS (CONTINUED)

2. Statement letter of no financial interest and independence, dated 10/26/11, signed and sealed by Anthony Lynn Miller, P. E.
3. Letter of *Adoption of as his Own, the Work of another Engineer* per Section 61G15–27.001 of the F.B.P.E., dated 10/07/11 signed and sealed by Anthony Lynn Miller, P. E.
4. Statement letter of conformance and compliance with the FBC–2007, dated 08/10/09, signed and sealed by Robert L. Clark, P. E.
   (Submitted under previous NOA No. 09–0901.08)
5. Statement letter of no financial interest and independence, dated 08/10/09, signed and sealed by Robert L. Clark, P. E.
   (Submitted under previous NOA No. 09–0901.08)
6. Test Proposal No. **07–2517–R** issued by BCCO dated 11/20/07 signed by Ishaq I. Chanda, P.E.
   (Submitted under previous NOA No. 07–0613.02)
7. Laboratory compliance letter for Test Report No. **ATI–72150.01–401–18**, issued by Architectural Testing, Inc., dated 07/23/07, signed and sealed by Joseph A. Reed, P.E.
   (Submitted under previous NOA No. 07–0613.02)

G. OTHERS

1. Notice of Acceptance No. **09–0901.08**, issued to PGT Industries, Inc. for their Series "PW–3020 Aluminum Fixed Window – L.M.I.", approved on 12/30/09 and expiring on 08/16/12.

Jaime D. Gascon, P. E.
Product Control Section Supervisor
NOA No. 11–1114.16
Expiration Date: August 16, 2012
Approval Date: February 16, 2012

GENERAL NOTES: LARGE MISSILE IMPACT PICTURE WINDOW

1. GLAZING OPTION(S): 9/16" LAMI: (2) LITES OF 1/4" HEAT STRENGTHENED GLASS (HS) GLASS WITH AN .090" SENTRYGLAS PLUS (SGP) INTERLAYER.
2. CONFIGURATIONS: O; APPROVAL APPLIES TO FIXED WINDOWS OF EQUAL LEG FRAMES. SIDE BY SIDE COMBINATIONS OF FIXED/FIXED OR FIXED WITH OTHER WINDOW TYPES IN MODULES OF TWO OR MORE WINDOWS USING APPROVED MULLIONS.
3. DESIGN PRESSURES: A. NEGATIVE DESIGN LOADS BASED ON TESTED PRESSURE AND GLASS TABLES ASTM E 1300-02; B. POSITIVE DESIGN LOADS BASED ON WATER TEST PRESSURE AND GLASS TABLES ASTM E 1300-02.
4. ANCHORAGE: ANCHOR SHALL BE AS LISTED AND SPACED AS SHOWN ON DETAILS. ANCHOR EMBEDMENT TO SUBSTRATE SHALL BE BEYOND WALL DRESSING OR STUCCO. THE 33 1/3% STRESS INCREASE HAS NOT BEEN USED IN THE DESIGN OF THIS PRODUCT. MATERIALS, INCLUDING BUT NOT LIMITED TO STEEL SCREWS, THAT COME INTO CONTACT WITH OTHER DISSIMILAR MATERIALS SHALL MEET THE REQUIREMENTS OF THE FLORIDA BUILDING CODE. APPROVED ANCHORS: 1, #14 STEEL SCREW (G5) 2, 1/4" ELCO ULTRACON 3 & 4, 5/16" ELCO ULTRACON.
5. SHUTTER REQUIREMENT: NOT REQUIRED.
6. INSTALLATION SCREWS AND FRAME CORNERS SEALED WITH NARROW JOINT SEALANT.
7. REFERENCES: TEST REPORT ATI 72135.01-401.18 & 72150.01-401.18; ELCO TEXTRON NOA 07.0425.01; ANSI/AF&PA NDS-2005 FOR WOOD CONSTRUCTION; ADM-2005 ALUMINUM DESIGN MANUAL
8. THIS PRODUCT HAS BEEN DESIGNED & TESTED TO COMPLY WITH THE REQUIREMENTS OF THE FLORIDA BUILDING CODE, INCLUDING THE HIGH VELOCITY HURRICANE ZONE (HVHZ).

NOTE:
SUITABLE FOR LARGE AND SMALL MISSILE APPLICATIONS

DESIGN PRESSURES
(ALL SIZES & CONFIGURATIONS)

GLASS TYPE	POS	NEG
9/16" HEAT STRENGTHENED SGP LAMI	+130.0	-130.0

BASED ON 5/16" ELCO TAPCONS IN CONCRETE USING JAMB ANCHOR PLATE AND 1/4" SHIMS. OTHER ANCHOR TYPES AND SUBSTRATES AVAILABLE, SOME WITH DESIGN PRESSURE LIMITATIONS. SEE ENCLOSED FOR SPECIFICS.

NOA DRAWING MAP

GENERAL NOTES..... 1
GLAZING DETAILS..... 1
ELEVATIONS..... 1
VERT. SECTIONS..... 2
HORIZ. SECTIONS..... 2
CORNER ASSEMBLY..... 2
EXTRUSIONS..... 3
PARTS LIST..... 3
ANCHORAGE..... 3
ANCHOR QUANTITIES..... 4-6
DP TABLES..... 7

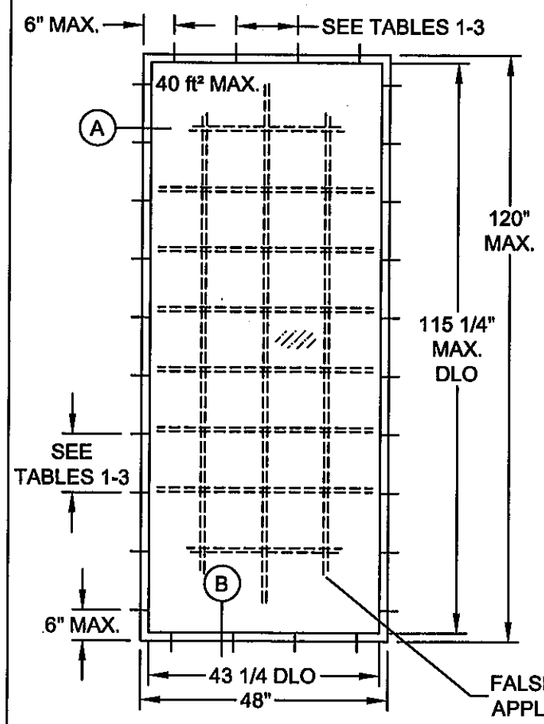

ELEVATION
(AS TESTED)

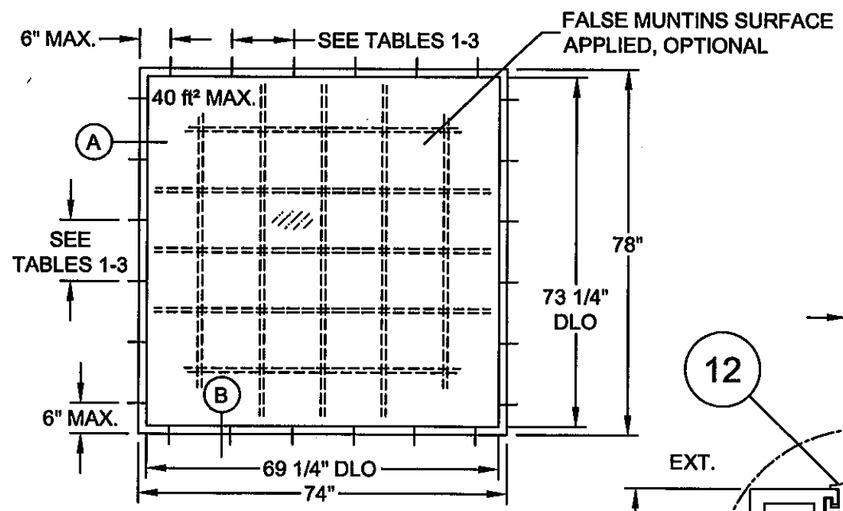

NOTE: WINDOW TO BE 40 SQUARE FEET IN AREA OR LESS AND NOT MORE THAN 120" ON ANY 1 SIDE.

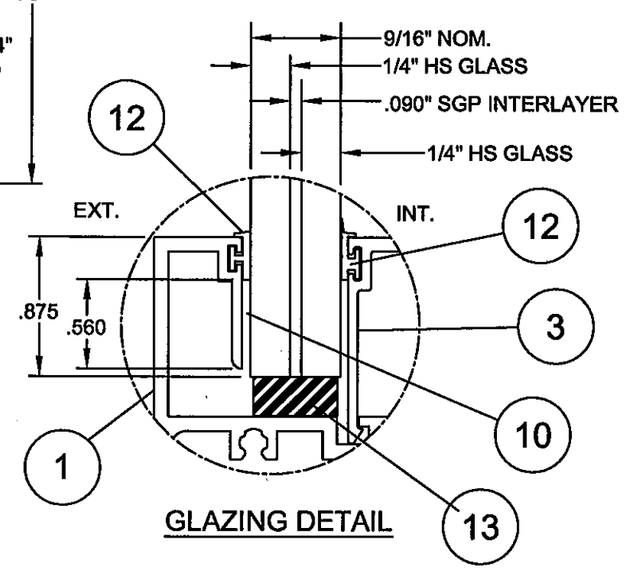

GLAZING DETAIL

PRODUCT REVISED
as complying with the Florida Building Code
Acceptance No 11-1114.16
Expiration Date 08/16/2012
By
Miami Dade Product Control

ANTHONY LYNN MILLER
LICENSE
No. 58705
10/26/11
STATE OF FLORIDA
PROFESSIONAL ENGINEER
A. Lynn Miller, P.E.
P.E.# 58705

Revsd By:	Date:	Revisions:	
JR	05/25/09	A	A. Added 40 ft² rule & updated format.
J.J.	11/19/11	B	2010 FBC UPDATE
Drawn By: J.R.	Date: 12/15/07	Checked By:	Date:

1070 TECHNOLOGY DRIVE
NOKOMIS, FL 34275

P.O. BOX 1529
NOKOMIS, FL 34274

PGT®

Description: GENERAL NOTES, ELEVATION & GLAZING DETAIL
Title: ALUMINUM PICTURE WINDOW, LMI

Series/Model:	Scale:	Sheet:	Drawing No.	Rev:
PW3020	NTS	1 of 7	3020-3	B

NOTE:
SUITABLE FOR LARGE AND SMALL MISSILE APPLICATIONS

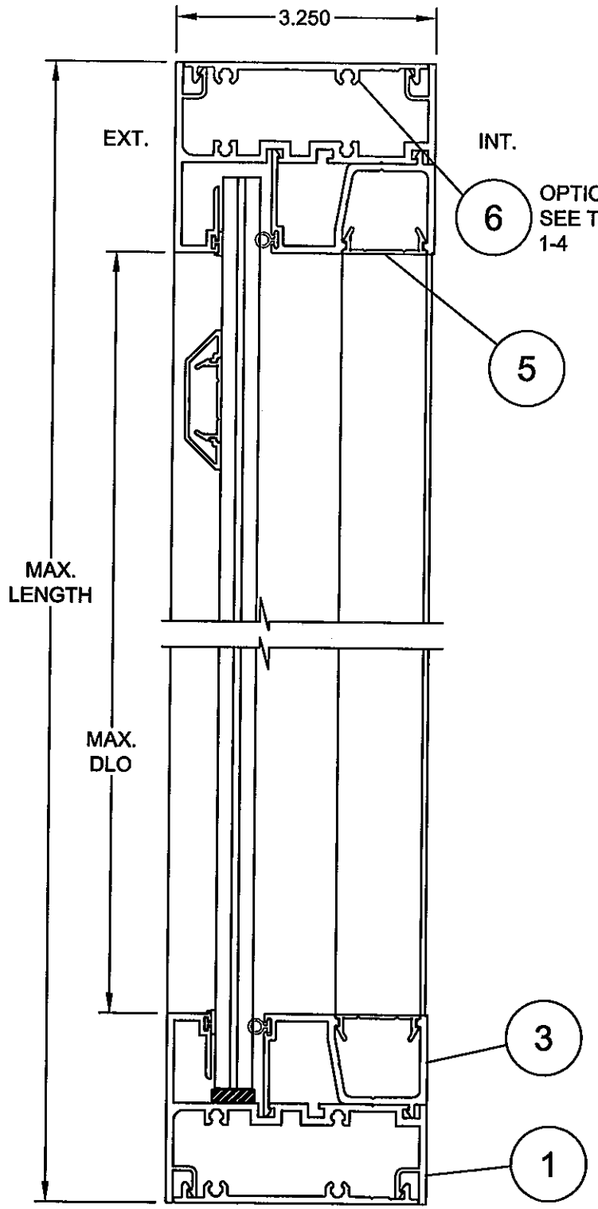

VERTICAL SECTION - A

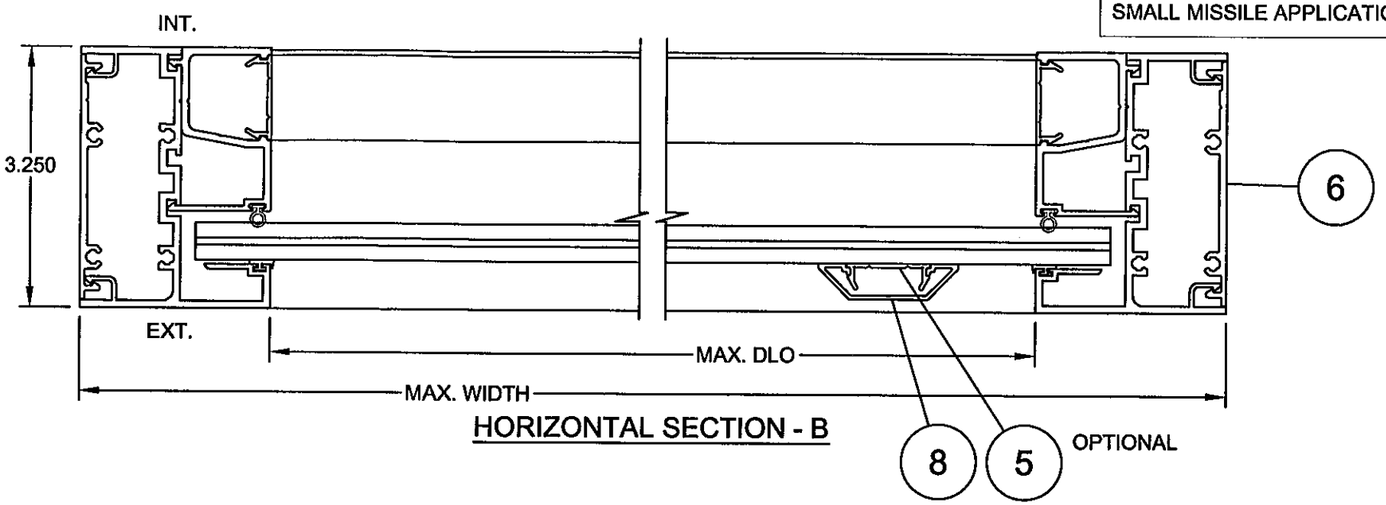

HORIZONTAL SECTION - B

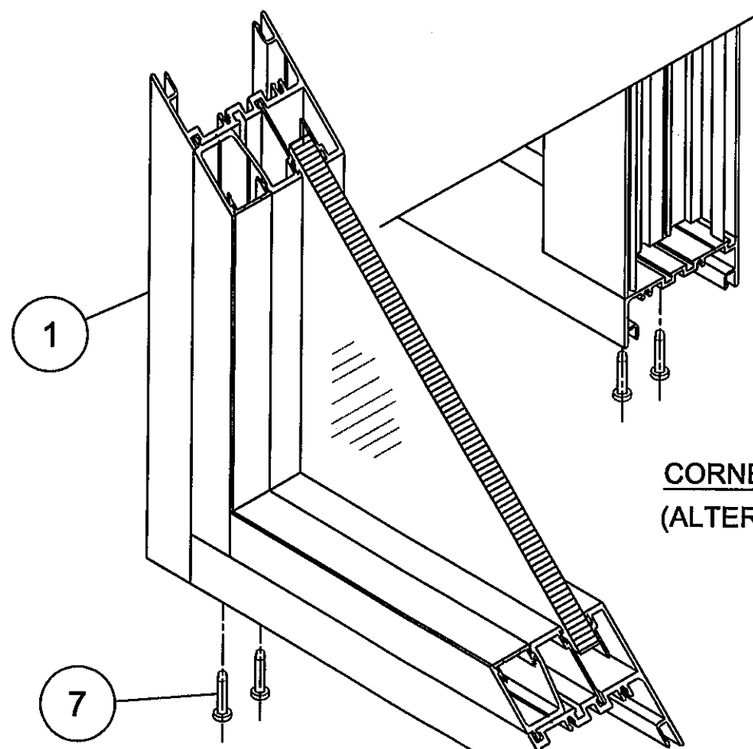

CORNER DETAIL INSIDE

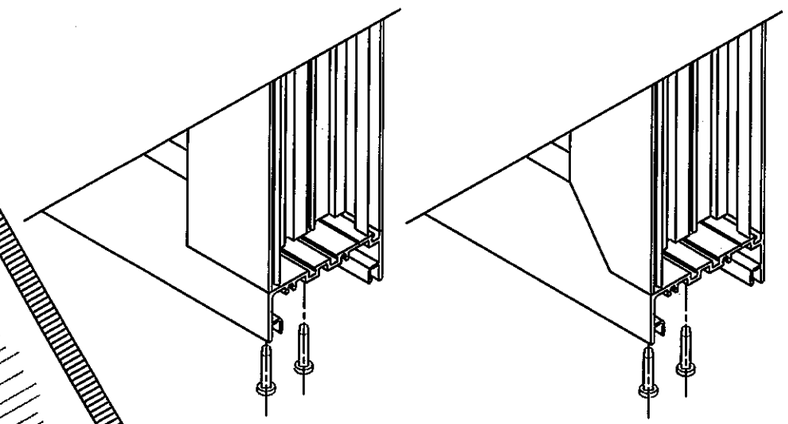

CORNER DETAIL OUTSIDE
(ALTERNATE FAB DETAILS)

PRODUCT REVISED
as complying with the Florida Building Code
Acceptance No 11-1114.16
Expiration Date 08/16/2012
By
Miami Dade Product Control

ANTHONY LYNN MILLER
LICENSE
No. 58705
10/26/11
STATE OF FLORIDA
PROFESSIONAL ENGINEER
A. Lynn Miller, P.E.
P.E.# 58705

Revsd By:	Date:	Revisions:	
JR	05/25/09	A	A. Added 40 ft² rule & updated format.
J.J.	11/19/11	B	NO CHANGE THIS SHEET
Revsd By:	Date:	Revisions:	
Drawn By: J.R.	Date: 12/15/07	Checked By:	Date:

1070 TECHNOLOGY DRIVE
NOKOMIS, FL 34275

P.O. BOX 1529
NOKOMIS, FL 34274

PGT®

Description: SECTIONS

Title: ALUMINUM PICTURE WINDOW, LMI

Series/Model:	Scale:	Sheet:	Drawing No.	Rev:
PW3020	.5x	2 of 7	3020-3	B

NOTES:

1. FOR CONCRETE APPLICATIONS USE ANCHOR TYPE 2, 3 OR 4. SEE SHEETS 1-3, FOR ANCHOR DESCRIPTION AND SPACING.
2. FOR WOOD APPLICATIONS USE ANCHOR TYPES 1 OR 2. SEE SHEET 1-3 FOR ANCHOR DESCRIPTION AND SPACING.
3. WOOD BUCKS DEPICTED AS 1x ARE LESS THAN 1 1/2" THICK. 1x WOOD BUCKS ARE OPTIONAL IF UNIT IS INSTALLED DIRECTLY TO SOLID CONCRETE. WOOD BUCKS DEPICTED AS 2x ARE 1 1/2" THICK OR GREATER. INSTALLATION TO THE SUBSTRATE OF WOOD BUCKS TO BE ENGINEERED BY OTHERS OR AS APPROVED BY THE AUTHORITY HAVING JURISDICTION (AHJ).

ITEM	PART #	DESCRIPTION	MAT'L	VENDOR #
1	13102	FRAME, FEMALE	6063-T5	3506GW-90-7
3	13105	GLAZING BEAD, TYPE 1	6063-T5	3506GW-90-3
5	13106	ANCHOR COVER PLATE	6063-T5	3506GW-90-5
6	13103	ANCHOR PLATE	6063-T5	3506GW-90-9
7		#10 X 1" PH SMS	S.S.	
8	13053	MUNTIN/MULL COVER	6063-T5	3506GW-590-3
10		BACKBEDDING	SILICONE	GE RS 7700
11		SEAM-SEALER		
12	13060	GLAZING LEG WSTP.	EPDM	13060
13	1614	SETTING BLOCK 1/8"x1/2"x1"	EPDM	
14	9/16" LAMI (1/4" T, .060 SGP, 1/4" T)		GLASS	PGT

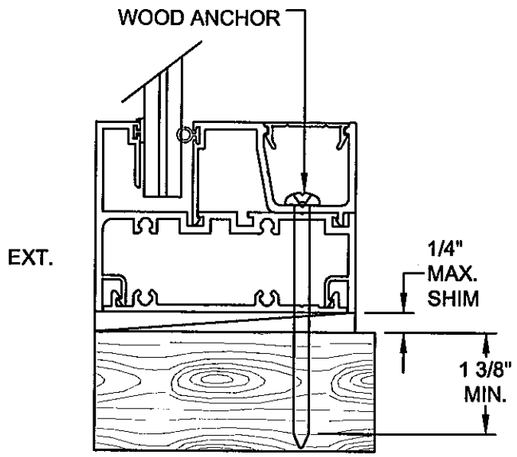

TYPE HEAD, SILL & JAMB (2x WOOD)

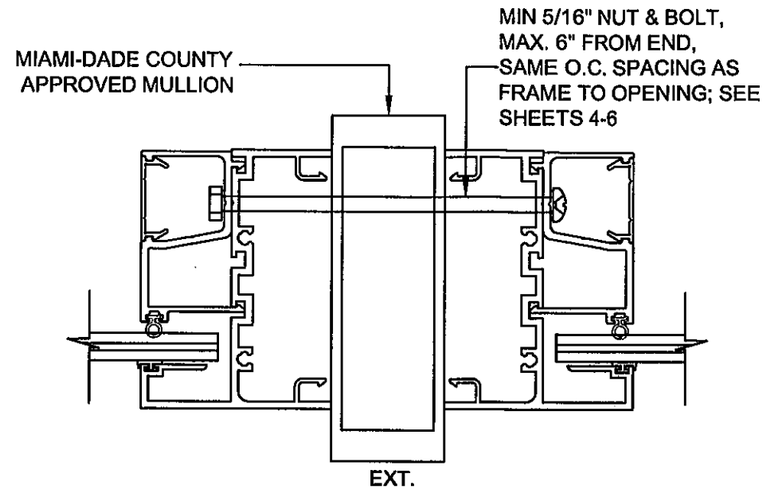

MULLED EXAMPLE - ENGINEERED BY OTHERS

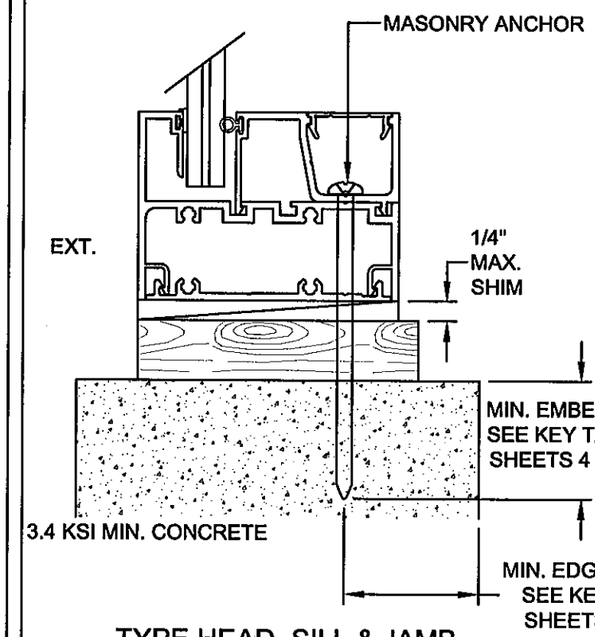

TYPE HEAD, SILL & JAMB
(CONCRETE W/ 1x BUCK)

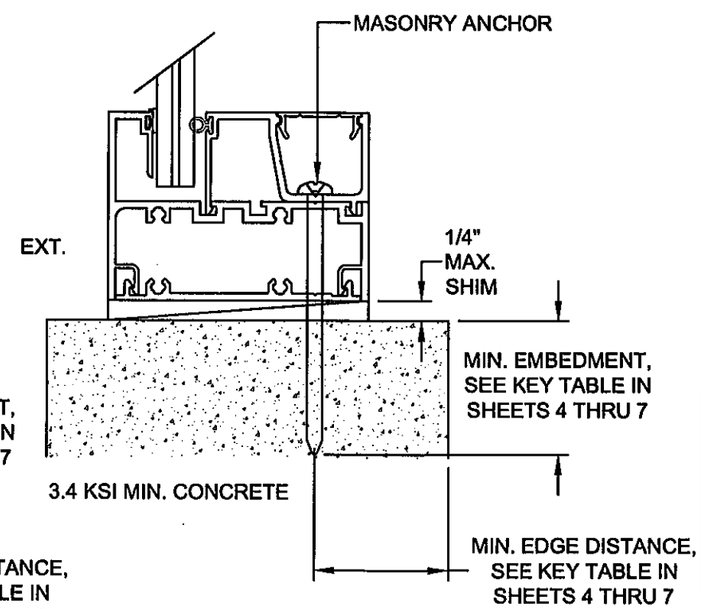

TYPE HEAD, SILL & JAMB
(DIRECTLY TO CONCRETE)

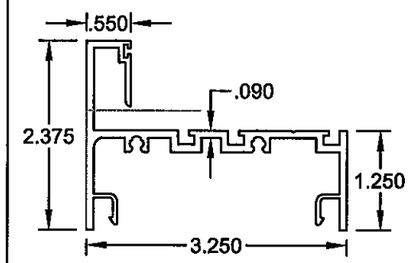

1 - FRAME, FEMALE

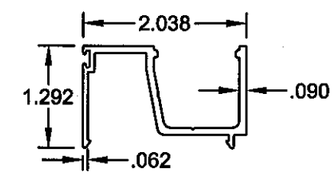

3 - GLAZING BEAD, TYPE 1

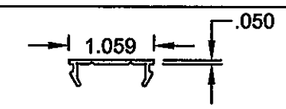

5 - ANCHOR COVER PLATE

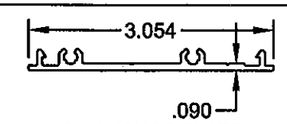

6 - ANCHOR PLATE

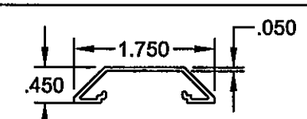

8 - MUNTIN/MULL COVER

NOTE:

SUITABLE FOR LARGE AND SMALL MISSILE APPLICATIONS

PRODUCT REVISED
as complying with the Florida
Building Code
Acceptance No 11-1114.16
Expiration Date 08/16/2012
By
Miami Dade Product Control

ANTHONY LYNN MILLER
LICENSE
No. 58705
10/26/11
STATE OF
FLORIDA
PROFESSIONAL ENGINEER
A. Lynn Miller, P.E.
P.E.# 58705

Revsd By:	Date:	Revisions:	
JR	05/25/09	A	A. Added 40 ft² rule & updated format.
J.J.	11/19/11	B	NO CHANGE THIS SHEET
Revsd By:	Date:	Revisions:	
Drawn By: J.R.	Date: 12/15/07	Checked By:	Date:

1070 TECHNOLOGY DRIVE
NOKOMIS, FL 34275

P.O. BOX 1529
NOKOMIS, FL 34274

Description: PARTS LIST, EXTRUSIONS & ANCHORAGE

Title: ALUMINUM PICTURE WINDOW, LMI

Series/Model:	Scale:	Sheet:	Drawing No.	Rev:
PW3020	.5x	3 of 7	3020-3	B

TABLE 1

HEAD, SILL AND JAMB ANCHOR QUANTITIES FOR DESIGN PRESSURES OF +130/-130 PSF OR LESS

WINDOW WIDTH (in)	ANCHOR LOCATION	WINDOW HEIGHT (in) 36				48				60				72				84				96				108				120			
	ANCHOR TYPE (see table below)	1	2	3	4	1	2	3	4	1	2	3	4	1	2	3	4	1	2	3	4	1	2	3	4	1	2	3	4	1	2	3	4
24	Head and Sill	2	2	3	2	2	2	3	2	2	2	3	2	2	2	3	2	2	2	3	2	2	2	3	2	2	2	3	2	2	2	3	2
	Jamb	3	3	5	3	4	4	7	4	5	5	9	5	6	6	11	6	7	7	13	7	8	8	15	8	9	9	17	9	9	9	19	9
36	Head and Sill	3	3	5	3	3	3	5	3	3	3	5	3	3	3	5	3	3	3	5	3	3	3	5	3	3	3	5	3	3	3	5	3
	Jamb	3	3	5	3	4	4	8	4	5	5	11	5	6	6	14	6	7	7	18	7	8	8	21	8	9	9	24	9	9	10	27	10
48	Head and Sill	4	4	8	4	4	4	9	4	4	4	9	4	4	4	9	4	4	4	9	4	4	4	9	4	4	4	9	4	4	4	9	4
	Jamb	3	3	5	3	4	4	9	4	5	5	13	5	6	6	17	6	7	8	21	8	8	9	25	9	9	11	29	11	10	12	34	12
60	Head and Sill	5	5	11	5	5	5	13	5	5	5	13	5	5	5	13	5	5	5	13	5	5	5	13	5								
	Jamb	3	3	5	3	4	4	9	4	5	5	13	5	6	7	19	7	7	9	24	9	9	11	29	11								
72	Head and Sill	6	6	14	6	6	6	17	6	6	6	19	6	6	6	19	6	6	6	19	6												
	Jamb	3	3	5	3	4	4	9	4	5	5	13	5	6	7	19	7	8	9	25	9												
84	Head and Sill	7	7	18	7	7	7	21	7	7	7	24	7	8	7	25	8	8	7	26	8												
	Jamb	3	3	5	3	4	4	9	4	5	5	13	5	6	7	19	7	8	9	26	9												
96	Head and Sill	8	8	21	8	8	8	25	8	9	8	29	9																				
	Jamb	3	3	5	3	4	4	9	4	5	5	13	5																				
108	Head and Sill	9	9	24	9	9	9	29	9	10	9	34	10																				
	Jamb	3	3	5	3	4	4	9	4	5	5	13	5																				
120	Head and Sill	9	9	27	9	10	9	34	10																								
	Jamb	3	3	5	3	4	4	9	4																								

NOTE:

SUITABLE FOR LARGE AND SMALL MISSILE APPLICATIONS

NOTES:

1. TO BE USED IN CONJUNCTION WITH INSTALLATION DRAWINGS AND NOTES OF SHEET 3 OF 7.
2. ALL SIZES ARE LIMITED TO 40 SQUARE FEET.
3. INTERPOLATION BETWEEN VALUES ALLOWED - ALWAYS ROUND UP.
4. MAXIMUM ANCHOR SPACING:
   6" FROM THE CORNER
   13.5" BETWEEN ANCHORS

KEY TABLE

Anchor Type	Anchor Type	Anchor Location	Substrate	Requires Anchor Plate	Min. O.C. Distance	Min. Edge Distance	Min. Embedment
1	off-the-shelf #14, steel screw (G5)	Head & Sill	Wood	Yes	2	1	1.375
		Jamb	Wood	Yes	2	1	1.375
2	Elco 1/4" steel Ultracon	Head & Sill	Concrete	Yes	4	1	1.375
		Jamb	CMU or Concrete	Yes	4	1	1.25
3	Elco 5/16" steel Ultracon	Head & Sill	Concrete	No	5	1.75	1
		Jamb	CMU or Concrete	No	5	1.75	1.25
4	Elco 5/16" steel Ultracon	Head & Sill	Concrete	Yes	5	1.75	1
		Jamb	CMU or Concrete	Yes	5	1.75	1.25

PRODUCT REVISED
as complying with the Florida Building Code
Acceptance No 11-1114.16
Expiration Date 08/16/2012
By
Miami Dade Product Control

ANTHONY LYNN MILLER
LICENSE
No. 58705
STATE OF FLORIDA
PROFESSIONAL ENGINEER
10/26/11
A. Lynn Miller, P.E.
P.E.# 58705

Revsd By:	Date:	Revisions:	
JR	05/25/09	A	A. Added 40 ft² rule & updated format.
J.J.	11/19/11	B	NO CHANGE THIS SHEET
Revsd By:	Date:	Revisions:	
Drawn By: J.R.	Date: 12/05/07	Checked By:	Date:

1070 TECHNOLOGY DRIVE
NOKOMIS, FL 34275

P.O. BOX 1529
NOKOMIS, FL 34274

PGT®

Description: ANCHORAGE PER 130 DP

Title: ALUMINUM PICTURE WINDOW, LMI

Series/Model:	Scale:	Sheet:	Drawing No.	Rev:
PW3020	N/A	4 of 7	3020-3	B

TABLE 2

HEAD, SILL AND JAMB ANCHOR QUANTITIES FOR DESIGN PRESSURES OF +110/-110 PSF OR LESS

ANCHOR TYPE (see table below)		WINDOW HEIGHT (in)																															
		36				48				60				72				84				96				108				120			
WINDOW WIDTH (in)	ANCHOR LOCATION	1	2	3	4	1	2	3	4	1	2	3	4	1	2	3	4	1	2	3	4	1	2	3	4	1	2	3	4	1	2	3	4
24	Head and Sill	2	2	2	2	2	2	2	2	2	2	2	2	2	2	2	2	2	2	2	2	2	2	2	2	2	2	2	2	2	2	2	2
	Jamb	3	3	4	3	4	4	6	4	5	5	7	5	6	6	9	6	7	7	11	7	8	8	13	8	9	9	14	9	9	9	16	9
36	Head and Sill	3	3	4	3	3	3	4	3	3	3	4	3	3	3	4	3	3	3	4	3	3	3	4	3	3	3	4	3	3	3	4	3
	Jamb	3	3	4	3	4	4	7	4	5	5	10	5	6	6	12	6	7	7	15	7	8	8	18	8	9	9	20	9	9	9	23	9
48	Head and Sill	4	4	7	4	4	4	7	4	4	4	7	4	4	4	7	4	4	4	7	4	4	4	7	4	4	4	7	4	4	4	7	4
	Jamb	3	3	4	3	4	4	7	4	5	5	11	5	6	6	14	6	7	7	18	7	8	8	21	8	9	9	25	9	9	10	28	10
60	Head and Sill	5	5	10	5	5	5	11	5	5	5	11	5	5	5	11	5	5	5	11	5	5	5	11	5								
	Jamb	3	3	4	3	4	4	7	4	5	5	11	5	6	6	16	6	7	7	20	7	8	9	25	9								
72	Head and Sill	6	6	12	6	6	6	14	6	6	6	16	6	6	6	16	6	6	6	16	6												
	Jamb	3	3	4	3	4	4	7	4	5	5	11	5	6	6	16	6	7	8	21	8												
84	Head and Sill	7	7	15	7	7	7	18	7	7	7	20	7	7	7	21	7	7	7	22	7												
	Jamb	3	3	4	3	4	4	7	4	5	5	11	5	6	6	16	6	7	8	22	8												
96	Head and Sill	8	8	18	8	8	8	21	8	8	8	25	8																				
	Jamb	3	3	4	3	4	4	7	4	5	5	11	5																				
108	Head and Sill	9	9	20	9	9	9	25	9	9	9	29	9																				
	Jamb	3	3	4	3	4	4	7	4	5	5	11	5																				
120	Head and Sill	9	9	23	9	9	9	28	9																								
	Jamb	3	3	4	3	4	4	7	4																								

NOTE:

SUITABLE FOR LARGE AND SMALL MISSILE APPLICATIONS

NOTES:

1. TO BE USED IN CONJUNCTION WITH INSTALLATION DRAWINGS AND NOTES OF SHEET 3 OF 7.
2. ALL SIZES ARE LIMITED TO 40 SQUARE FEET.
3. INTERPOLATION BETWEEN VALUES ALLOWED - ALWAYS ROUND UP.
4. MAXIMUM ANCHOR SPACING:
   6" FROM THE CORNER
   13.5" BETWEEN ANCHORS

KEY TABLE

Anchor Type	Anchor Type	Anchor Location	Substrate	Requires Anchor Plate	Min. O.C. Distance	Min. Edge Distance	Min. Embedment
1	off-the-shelf #14, steel screw (G5)	Head & Sill	Wood	Yes	2	1	1.375
		Jamb	Wood	Yes	2	1	1.375
2	Elco 1/4" steel Ultracon	Head & Sill	Concrete	Yes	4	1	1.375
		Jamb	CMU or Concrete	Yes	4	1	1.25
3	Elco 5/16" steel Ultracon	Head & Sill	Concrete	No	5	1.75	1
		Jamb	CMU or Concrete	No	5	1.75	1.25
4	Elco 5/16" steel Ultracon	Head & Sill	Concrete	Yes	5	1.75	1
		Jamb	CMU or Concrete	Yes	5	1.75	1.25

PRODUCT REVISED
as complying with the Florida Building Code
Acceptance No 11-1114.16
Expiration Date 08/16/2012
By
Miami Dade Product Control

ANTHONY LYNN MILLER
LICENSE
No. 58705
10/26/11
STATE OF FLORIDA
PROFESSIONAL ENGINEER
A. Lynn Miller, P.E.
P.E.# 58705

Revsd By:	Date:	Revisions:	
JR	05/25/09	A	A. Added 40 ft² rule & updated format.
J.J.	11/19/11	B	NO CHANGE THIS SHEET
Drawn By: J.R.	Date: 12/05/07	Checked By:	Date:

1070 TECHNOLOGY DRIVE
NOKOMIS, FL 34275

P.O. BOX 1529
NOKOMIS, FL 34274

Description: ANCHORAGE PER 110 DP

Title: ALUMINUM PICTURE WINDOW, LMI

Series/Model:	Scale:	Sheet:	Drawing No.	Rev:
PW3020	N/A	5 of 7	3020-3	B

TABLE 3

HEAD, SILL AND JAMB ANCHOR QUANTITIES FOR DESIGN PRESSURES OF +90/-90 PSF OR LESS

WINDOW WIDTH (in)	ANCHOR LOCATION	WINDOW HEIGHT (in) 36				48				60				72				84				96				108				120			
	ANCHOR TYPE (see table below)	1	2	3	4	1	2	3	4	1	2	3	4	1	2	3	4	1	2	3	4	1	2	3	4	1	2	3	4	1	2	3	4
24	Head and Sill	2	2	2	2	2	2	2	2	2	2	2	2	2	2	2	2	2	2	2	2	2	2	2	2	2	2	2	2	2	2	2	2
	Jamb	3	3	3	3	4	4	5	4	5	5	6	5	6	6	8	6	7	7	9	7	8	8	10	8	9	9	12	9	9	9	13	9
36	Head and Sill	3	3	4	3	3	3	4	3	3	3	4	3	3	3	4	3	3	3	4	3	3	3	4	3	3	3	4	3	3	3	4	3
	Jamb	3	3	4	3	4	4	6	4	5	5	8	5	6	6	10	6	7	7	12	7	8	8	14	8	9	9	17	9	9	9	19	9
48	Head and Sill	4	4	6	4	4	4	6	4	4	4	6	4	4	4	6	4	4	4	6	4	4	4	6	4	4	4	6	4	4	4	6	4
	Jamb	3	3	4	3	4	4	6	4	5	5	9	5	6	6	12	6	7	7	15	7	8	8	18	8	9	9	20	9	9	9	23	9
60	Head and Sill	5	5	8	5	5	5	9	5	5	5	9	5	5	5	9	5	5	5	9	5	5	5	9	5								
	Jamb	3	3	4	3	4	4	6	4	5	5	9	5	6	6	13	6	7	7	17	7	8	8	20	8								
72	Head and Sill	6	6	10	6	6	6	12	6	6	6	13	6	6	6	13	6	6	6	13	6												
	Jamb	3	3	4	3	4	4	6	4	5	5	9	5	6	6	13	6	7	7	18	7												
84	Head and Sill	7	7	12	7	7	7	15	7	7	7	17	7	7	7	18	7	7	7	18	7												
	Jamb	3	3	4	3	4	4	6	4	5	5	9	5	6	6	13	6	7	7	18	7												
96	Head and Sill	8	8	14	8	8	8	18	8	8	8	20	8																				
	Jamb	3	3	4	3	4	4	6	4	5	5	9	5																				
108	Head and Sill	9	9	17	9	9	9	20	9	9	9	24	9																				
	Jamb	3	3	4	3	4	4	6	4	5	5	9	5																				
120	Head and Sill	9	9	19	9	9	9	23	9																								
	Jamb	3	3	4	3	4	4	6	4																								

NOTE:

SUITABLE FOR LARGE AND SMALL MISSILE APPLICATIONS

NOTES:

1. TO BE USED IN CONJUNCTION WITH INSTALLATION DRAWINGS AND NOTES OF SHEET 3 OF 7.
2. ALL SIZES ARE LIMITED TO 40 SQUARE FEET.
3. INTERPOLATION BETWEEN VALUES ALLOWED - ALWAYS ROUND UP.
4. MAXIMUM ANCHOR SPACING:
   6" FROM THE CORNER
   13.5" BETWEEN ANCHORS

KEY TABLE

Anchor Type	Anchor Type	Anchor Location	Substrate	Requires Anchor Plate	Min. O.C. Distance	Min. Edge Distance	Min. Embedment
1	off-the-shelf #14, steel screw (G5)	Head & Sill	Wood	Yes	2	1	1.375
		Jamb	Wood	Yes	2	1	1.375
2	Elco 1/4" steel Ultracon	Head & Sill	Concrete	Yes	4	1	1.375
		Jamb	CMU or Concrete	Yes	4	1	1.25
3	Elco 5/16" steel Ultracon	Head & Sill	Concrete	No	5	1.75	1
		Jamb	CMU or Concrete	No	5	1.75	1.25
4	Elco 5/16" steel Ultracon	Head & Sill	Concrete	Yes	5	1.75	1
		Jamb	CMU or Concrete	Yes	5	1.75	1.25

PRODUCT REVISED
as complying with the Florida Building Code
Acceptance No 11-1114.16
Expiration Date 08/16/2012
By
Miami Dade Product Control

ANTHONY LYNN MILLER
LICENSE
No. 58705
10/26/11
STATE OF FLORIDA
PROFESSIONAL ENGINEER
A. Lynn Miller, P.E.
P.E.# 58705

Revsd By:	Date:	Revisions:	
JR	05/25/09	A	A. Added 40 ft² rule & updated format.
J.J.	11/19/11	B	NO CHANGE THIS SHEET
Revsd By:	Date:	Revisions:	
Drawn By: J.R.	Date: 12/05/07	Checked By:	Date:

1070 TECHNOLOGY DRIVE
NOKOMIS, FL 34275

P.O. BOX 1529
NOKOMIS, FL 34274

PGT®

Description: ANCHORAGE PER 90 DP

Title: ALUMINUM PICTURE WINDOW, LMI

Series/Model:	Scale:	Sheet:	Drawing No.	Rev:
PW3020	N/A	6 of 7	3020-3	B

TABLE 4

Design Pressure for Minimal Anchorage (+ and -, in psf)

Min. Anchors per Jamb		WINDOW HEIGHT (in)																															
		36				48				60				72				84				96				108				120			
		3				4				5				6				7				8				9				9			
WINDOW WIDTH (in)	Substrate→ / Min. Anchors per Head/Sill	1	2	3	4	1	2	3	4	1	2	3	4	1	2	3	4	1	2	3	4	1	2	3	4	1	2	3	4	1	2	3	4
24	2	90	90	90	90	90	90	84	90	90	90	79	90	90	90	76	90	90	90	74	90	90	90	72	90	90	90	71	90	90	90	63	90
36	3	90	90	84	90	90	90	67	90	90	90	60	90	90	90	56	90	90	90	53	90	90	90	52	90	90	90	50	90	90	90	44	90
48	4	90	90	67	90	90	90	63	90	90	90	53	90	90	90	47	90	90	90	44	90	90	90	42	90	90	90	41	90	90	90	35	90
60	5	90	90	60	90	90	90	53	90	90	90	50	90	90	90	43	90	90	90	39	90	90	90	37	90								
72	6	90	90	56	90	90	90	47	90	90	90	43	90	90	90	42	90																
84	7	90	90	53	90	90	90	44	90	90	90	39	90																				
96	8	90	90	52	90	90	90	42	90	90	90	37	90																				
108	9	90	90	50	90	90	90	41	90																								
120	9	90	90	44	90	90	90	35	90																								

NOTE:

SUITABLE FOR LARGE AND SMALL MISSILE APPLICATIONS

NOTES:

1. TO BE USED IN CONJUNCTION WITH INSTALLATION DRAWINGS AND NOTES OF SHEET 3 OF 7.
2. ALL SIZES ARE LIMITED TO 40 SQUARE FEET.
3. INTERPOLATION BETWEEN VALUES ALLOWED - ALWAYS ROUND UP.
4. MAXIMUM ANCHOR SPACING:
   6" FROM THE CORNER
   13.5" BETWEEN ANCHORS

KEY TABLE

Anchor Type	Anchor Type	Anchor Location	Substrate	Requires Anchor Plate	Min. O.C. Distance	Min. Edge Distance	Min. Embedment
1	off-the-shelf #14, steel screw (G5)	Head & Sill	Wood	Yes	2	1	1.375
		Jamb	Wood	Yes	2	1	1.375
2	Elco 1/4" steel Ultracon	Head & Sill	Concrete	Yes	4	1	1.375
		Jamb	CMU or Concrete	Yes	4	1	1.25
3	Elco 5/16" steel Ultracon	Head & Sill	Concrete	No	5	1.75	1
		Jamb	CMU or Concrete	No	5	1.75	1.25
4	Elco 5/16" steel Ultracon	Head & Sill	Concrete	Yes	5	1.75	1
		Jamb	CMU or Concrete	Yes	5	1.75	1.25

PRODUCT REVISED
as complying with the Florida Building Code
Acceptance No 11-1114.16
Expiration Date 08/16/2012
By
Miami Dade Product Control

ANTHONY LYNN MILLER
LICENSE
No. 58705
10/26/11
STATE OF FLORIDA
PROFESSIONAL ENGINEER
A. Lynn Miller, P.E.
P.E.# 58705

Revsd By:	Date:	Revisions:	
JR	05/25/09	A	A. Added 40 ft² rule & updated format.
J.J.	11/19/11	B	NO CHANGE THIS SHEET
Drawn By: J.R.	Date: 12/05/07	Checked By:	Date:

1070 TECHNOLOGY DRIVE
NOKOMIS, FL 34275

P.O. BOX 1529
NOKOMIS, FL 34274

PGT®

Description: DP USING MINIMUM ANCHORAGE

Title: ALUMINUM PICTURE WINDOW, LMI

Series/Model:	Scale:	Sheet:	Drawing No.	Rev:
PW3020	N/A	7 of 7	3020-3	B