MIAMI-DADE COUNTY
DEPARTMENT OF PERMITTING, ENVIRONMENT, AND REGULATORY AFFAIRS (PERA)
BOARD AND CODE ADMINISTRATION DIVISION

MIAMI-DADE COUNTY
PRODUCT CONTROL SECTION
11805 SW 26 Street, Room 208
Miami, Florida 33175-2474
T (786) 315-2590 F (786) 315-2599
www.miamidade.gov/pera/

NOTICE OF ACCEPTANCE (NOA)

Trulite Glass & Aluminum Solutions, LLC
800 Fairway Drive, Suite 200
Deerfield Beach, FL 33441

SCOPE:

This NOA is being issued under the applicable rules and regulations governing the use of construction materials. The documentation submitted has been reviewed and accepted by Miami-Dade County PERA - Product Control Section to be used in Miami Dade County and other areas where allowed by the Authority Having Jurisdiction (AHJ).

This NOA shall not be valid after the expiration date stated below. The Miami-Dade County Product Control Section (In Miami Dade County) and/or the AHJ (in areas other than Miami Dade County) reserve the right to have this product or material tested for quality assurance purposes. If this product or material fails to perform in the accepted manner, the manufacturer will incur the expense of such testing and the AHJ may immediately revoke, modify, or suspend the use of such product or material within their jurisdiction. PERA reserves the right to revoke this acceptance, if it is determined by Miami-Dade County Product Control Section that this product or material fails to meet the requirements of the applicable building code.

This product is approved as described herein, and has been designed to comply with the Florida Building Code, including the High Velocity Hurricane Zone.

DESCRIPTION: Series "3000 Resistor" Aluminum Storefront/Window Wall System – L.M.I.

APPROVAL DOCUMENT: Drawing No. **AD11-20**, titled "Resistor 3000 Storefront Wall - LMI", sheets 1 through 11 of 11, dated 09/22/11, prepared by MCY Engineering, Inc., signed and sealed by Yiping Wang, P.E., bearing the Miami-Dade County Product Control Revision stamp with the Notice of Acceptance number and expiration date by the Miami-Dade County Product Control Section.

MISSILE IMPACT RATING: Large and Small Missile Impact Resistant

LABELING: Each unit shall bear a permanent label with the manufacturer's name or logo, city, state, model/series, and following statement: "Miami-Dade County Product Control Approved", unless otherwise noted herein.

RENEWAL of this NOA shall be considered after a renewal application has been filed and there has been no change in the applicable building code negatively affecting the performance of this product.

TERMINATION of this NOA will occur after the expiration date or if there has been a revision or change in the materials, use, and/or manufacture of the product or process. Misuse of this NOA as an endorsement of any product, for sales, advertising or any other purposes shall automatically terminate this NOA. Failure to comply with any section of this NOA shall be cause for termination and removal of NOA.

ADVERTISEMENT: The NOA number preceded by the words Miami-Dade County, Florida, and followed by the expiration date may be displayed in advertising literature. If any portion of the NOA is displayed, then it shall be done in its entirety.

INSPECTION: A copy of this entire NOA shall be provided to the user by the manufacturer or its distributors and shall be available for inspection at the job site at the request of the Building Official.

This NOA **revises NOA # 09-1110.03** and consists of this page 1 and evidence pages E-1, E-2 and E-3, as well as approval document mentioned above.

The submitted documentation was reviewed by **Manuel Perez, P.E.**

MIAMI-DADE COUNTY APPROVED

Trulite Glass & Aluminum Solutions, LLC

NOTICE OF ACCEPTANCE: EVIDENCE SUBMITTED

A. DRAWINGS

1. Manufacturer's die drawings and sections.
2. Drawing No **AD11-20**, Sheets 1 through 11 of 11, titled "Resistor 3000 Storefront Wall - LMI", dated 09/22/11, prepared by MCY Engineering, Inc., signed and sealed by Yiping Wang, P.E.

B. TESTS

1. Test reports on: 1) Air Infiltration Test, per FBC, TAS 202-94
   2) Uniform Static Air Pressure Test, Loading per FBC TAS 202-94
   3) Water Resistance Test, per FBC, TAS 202-94
   4) Large Missile Impact Test per FBC, TAS 201-94
   5) Cyclic Wind Pressure Loading per FBC, TAS 203-94
   6) Forced Entry Test, per FBC 2411 3.2.1, TAS 202-94

   along with marked-up drawings and installation diagram of series 3000/L-3000 aluminum window wall system, prepared by Aluminum Window Wall System, prepared by Fenestration Testing Laboratory, Inc., Test Report No. **FTL-5893**, dated 04/02/09, signed and sealed by Michael R. Wenzel, P.E.
   (Submitted under previous NOA# 09-1110.03)
2. Test reports on: 1) Large Missile Impact Test per FBC, TAS 201-94
   2) Cyclic Wind Pressure Loading per FBC, TAS 203-94

   along with marked-up drawings and installation diagram of Series 3000/L-3000 aluminum window wall system, prepared by Fenestration Testing Laboratory, Inc., Test Report No. **FTL-5416**, dated 11/15/07, signed and sealed by Michael Wenzel, P.E.
   (Submitted under previous NOA# 09-0122.06)
3. Test reports on Safety Glazing Materials per ANSI Z97.1-1984 and CPSC 16 CFR 1201 of series 3000/L-3000 aluminum window wall System, prepared by Fenestration Testing Laboratory, Inc., Test Report No. **FTL-5421**, dated 10/18/07, signed and sealed by Michael Wenzel, P.E.
   (Submitted under previous NOA# 09-0122.06)
4. Test reports on: 1) Uniform Static Air Pressure Test per FBC, TAS 202-94
   2) Large Missile Impact Test per FBC, TAS 201-94
   3) Cyclic Wind Pressure Loading per FBC, TAS 203-94

   along with marked-up drawings and installation diagram of an aluminum storefront system, prepared & issued by Fenestration Testing Laboratory, Test Report No. **FTL-3398,** dated 12/10/03, signed & sealed by Edmundo J. Largaespada, P.E.
   (Submitted under previous NOA# 03-1211.08)

Manuel Perez

Manuel Perez, P.E.
Product Control Examiner
NOA No. 11-1117.03
Expiration Date: March 18, 2014
Approval Date: February 09, 2012

B. TESTS (CONTINUED)

5. Test reports on: 1) Uniform Static Air Pressure Test per FBC, TAS 202-94
2) Large Missile Impact Test per FBC, TAS 201-94
3) Cyclic Wind Pressure Loading per FBC, TAS 203-94
along with marked-up drawings and installation diagram of aluminum Window Wall system, prepared & issued by Fenestration Testing Laboratory, Test Report No. **FTL-3363** dated 04/24/03, signed and sealed by Edmundo J. Largaespada, P.E.
(Submitted under previous NOA# 03-1211.08)

6. Test reports on: 1) Large Missile Impact Test PA 201-94
2) Cyclic Loading Test, per SFBC PA 203-94
along with marked-up drawings and installation diagram of an aluminum window wall system, prepared by Fenestration Testing Laboratory, Inc. Test Reports No. **FTL-3326**, dated 01/09/02, signed and sealed by Luis Antonio Figueredo, P.E.
(Submitted under previous NOA# 03-1211.08)

7. Test reports on: 1) Air Infiltration Test, per SFBC, PA 202-94
2) Uniform Static Air Pressure Test, Loading per SFBC, PA 202-94
3) Water Resistance Test, per SFBC, PA 202-94
4) Large Missile Impact Test per SFBC, PA 201-94
5) Cyclic Wind Pressure Loading per SFBC, PA 203-94
along with marked-up drawings and installation diagram of an aluminum window wall system, prepared by Fenestration Testing Laboratory, Inc., Test Report No. **FTL-1010**, dated 10/25/94, signed and sealed by Yamil Gerardo Kuri, P.E.
(Submitted under previous NOA# 03-1211.08)

8. Test reports on: 1) Air Infiltration Test, per SFBC, PA 202-94
2) Uniform Static Air Pressure Test, Loading per SFBC, PA 202-94
3) Water Resistance Test, per SFBC, PA 202-94
along with marked-up drawings and installation diagram of an aluminum window wall system, prepared by Fenestration Testing Laboratory, Inc., Test Report No. **FTL-2221**, dated Dec. 9, 1998, signed and sealed by Gilbert Diamond, P.E.
(Submitted under previous NOA# 03-1211.08)

C. CALCULATIONS:

1. Anchor verification calculations and structural analysis, complying with FBC-2007 and 2010, dated 09/04/09, updated on 11/14/11, prepared by MCY Engineering, Inc., signed and sealed by Yiping Wang, P.E.

2. Glazing complies with ASTM E1300-04

Manuel Perez, P.E.
Product Control Examiner
NOA No. 11-1117.03
Expiration Date: March 18, 2014
Approval Date: February 09, 2012

NOTICE OF ACCEPTANCE: EVIDENCE SUBMITTED

D. QUALITY ASSURANCE

1. Miami-Dade Department of Permitting, Environment, and Regulatory Affairs (PERA).

E. MATERIAL CERTIFICATIONS

1. Notice of Acceptance No. **11–0624.02** issued to **E.I. DuPont DeNemours & Co.**, Inc. for their "**DuPont SentryGlas® Interlayer**" dated 08/25/11, expiring on 01/14/17.
2. Notice of Acceptance No. **11–0325.05** " issued to Solutia, Inc. for their "Saflex and Vanceva clear and color interlayers" dated 05/05/11, expiring on 05/21/16
3. Notice of Acceptance No. **08–0206.01** issued to **Solutia, Inc.** for their "**Saflex HP Glass Interlayer**" dated 04/17/08, expiring on 04/14/13.

F. STATEMENTS

1. Statement letter of conformance, complying with FBC-2007 and FBC-2010, dated 11/14/11, signed and sealed by Yiping Wang, P.E.
2. Statement letter of no financial interest, dated 11/14/11, signed and sealed by Yiping Wang, P.E.
3. Certificate of Amendment to Certificate of Formation of Arch Aluminum & Glass, LLC aware to change its name to: **Trulite Glass & Aluminum Solutions, LLC,** issued by in State of Delaware, dated July 25, 2011, signed by Grace Kurowska, CFO, Vice President, Treasurer & Secretary.
4. Certificate of Authentication of name change to **Trulite Glass & Aluminum Solutions, LLC** issued by the Secretary of State of the State of Delaware, dated 07/27/11, signed by Jeffrey W. Bullock, Secretary of State.
5. Florida Dept of State, listing of **Trulite Glass & Aluminum Solutions, LLC** (Foreign Limited Liability Co.), managed by Arch Intermediate Holding, LLC, Tamarac, Fl.

G. OTHERS

1. Notice of Acceptance No. **09-1110.03**, issued to Arch Aluminum & Glass Company, Inc. for their Series "Impactwall 3000/L-3000" Aluminum Window Wall System – L.M.I., approved on 03/31/10 and expiring on 03/18/14.

Manuel Perez, P.E.
Product Control Examiner
NOA No. 11-1117.03
Expiration Date: March 18, 2014
Approval Date: February 09, 2012

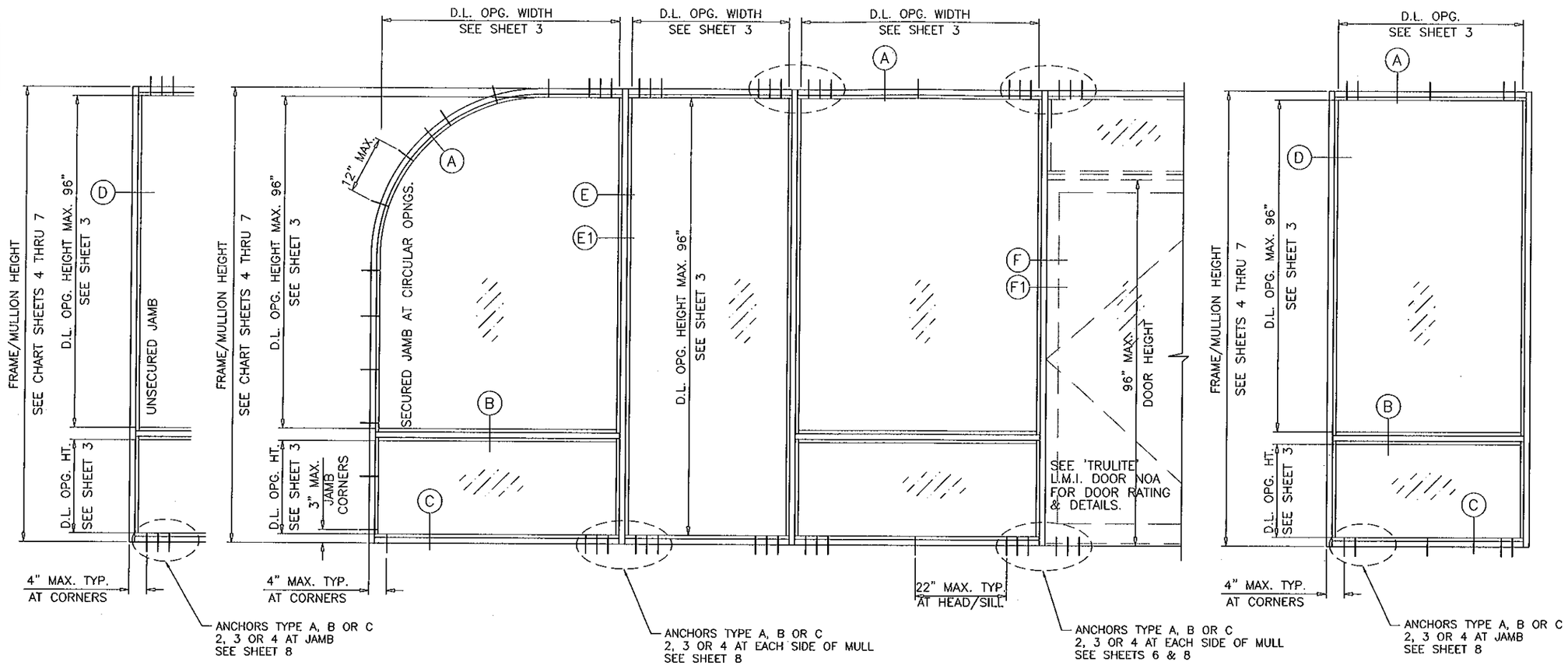

TYPICAL ELEVATIONS

IMPACT WALL 3000/L-3000 ALUMINUM WINDOW WALL SYSTEM INSIDE OR OUTSIDE GLAZED

WINDOW WALL SYSTEM IS RATED FOR LARGE & SMALL MISSILE IMPACT. SHUTTERS ARE NOT REQUIRED.

THIS SYSTEM MAY BE USED IN CONJUNCTION WITH MIAMI DADE COUNTY APPROVED ENTRANCE DOORS.

CODE REQUIREMENTS FOR SAFEGUARDS MUST BE OBSERVED.

THIS PRODUCT HAS BEEN DESIGNED AND TESTED TO COMPLY WITH THE REQUIREMENTS OF THE FLORIDA BUILDING CODE 2007/2010 EDITION INCLUDING HIGH VELOCITY HURRICANE ZONE (HVHZ).

WOOD BUCKS BY OTHERS, MUST BE ANCHORED PROPERLY TO TRANSFER LOADS TO THE STRUCTURE.

ANCHORS SHALL BE AS LISTED, SPACED AS SHOWN ON DETAILS, ANCHORS EMBEDMENT TO BASE MATERIAL SHALL BE BEYOND WALL DRESSING OR STUCCO.

ANCHORING OR LOADING CONDITIONS NOT SHOWN IN THESE DETAILS ARE NOT PART OF THIS APPROVAL.

A LOAD DURATION INCREASE IS USED IN DESIGN OF ANCHORS INTO WOOD ONLY.

MATERIALS INCLUDING BUT NOT LIMITED TO STEEL/METAL SCREWS, THAT COME INTO CONTACT WITH OTHER DISSIMILAR MATERIALS SHALL MEET THE REQUIREMENTS OF 2007/2010 FLORIDA BLDG. CODE SECTION 2003.8.4., 2411.3.3.3 & 2326.

INSTRUCTIONS:

USE CHARTS AS FOLLOWS.

STEP 1 DETERMINE DESIGN WIND LOAD REQUIREMENT BASED ON WIND VELOCITY, BLDG. HEIGHT, WIND ZONE USING APPLICABLE ASCE 7 STANDARD.

STEP 2 SEE CHARTS ON SHEET 3 FOR DESIGN LOAD CAPACITY OF DESIRED GLASS SIZE.

STEP 3 CHECK MULLION CAPACITY FOR A GIVEN SPACING AND HEIGHT USING CHARTS ON SHEET 4 THRU 7 THE CAPACITY SHOULD EXCEED THE DESIGN LOAD.

STEP 4 USING CHART ON SHEET 8 SELECT ANCHOR OPTION WITH DESIGN RATING MORE THAN DESIGN LOAD SPECIFIED IN STEP 1 ABOVE.

STEP 5 THE LOWEST VALUE RESULTING FROM STEPS 2, 3 AND 4 SHALL APPLY TO ENTIRE SYSTEM.

PRODUCT COMPLIES WITH REQUIREMENTS OF ANSI Z97.1.

Trulite
GLASS & ALUMINUM SOLUTIONS™
http://www.trulite.com
800 FAIRWAY DRIVE, Suite 200
DEERFIELD BEACH, FL 33441
p. 800-432-8132 | f. 954-724-2083

PRODUCT:

Resistor 3000

STOREFRONT WALL-LMI

Resistor
BLAST & STORM PROTECTION™

REVN	DATE/REMARKS

ENGINEER:
MCY ENGINEERING, INC.
GLAZING CONSULTANT
9110 SW SUNSET DRIVE
MIAMI, FL 33173
P: 305-271-0117
Email: MCY.Engineering@att.net
www.MCYEngineering.com

STAMP:

YIPING WANG, P.E.
FLORIDA REGISTRATION
LICENSE #55983
CERT. 28674

YIPING WANG LICENSE No. 55983 STATE OF FLORIDA PROFESSIONAL ENGINEER
NOV 15 2011

PRODUCT CONTROL APPROVAL

PRODUCT REVISED
as complying with the Florida Building Code
Acceptance No 11-1117.03
Expiration Date March 18, 2014
By
Miami Dade Product Control

DRAWN: S.L.	DRAWING No:
DATE: 9-22-11	1 OF 11
DWG: AD11-20	

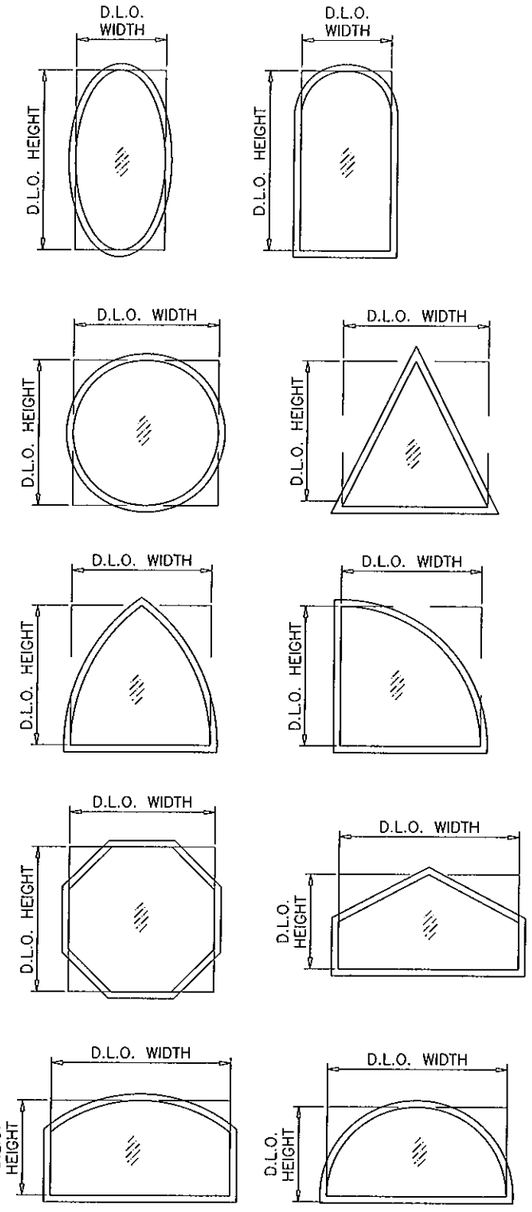

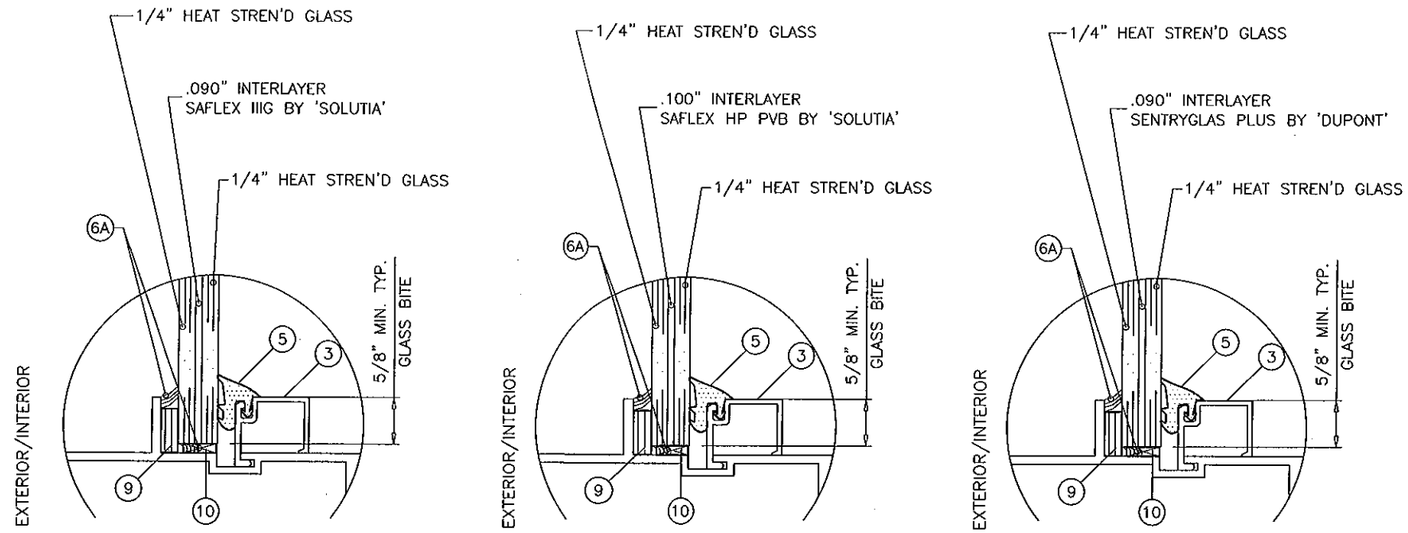

GLASS TYPE 'A'

GLASS TYPE 'B'

GLASS TYPE 'C'

GLAZING OPTIONS

9/16" OVERALL LAMINATED GLASS

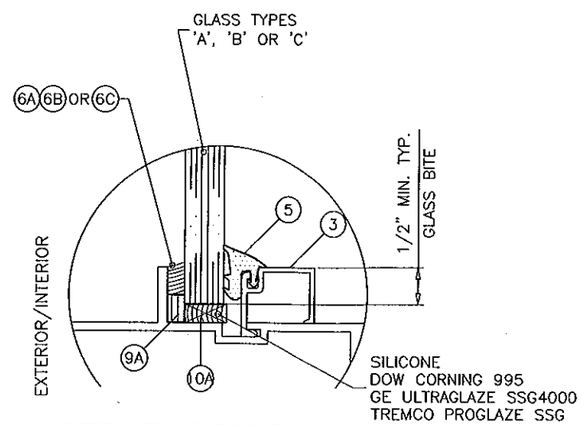

ALTERNATE GLAZING DETAIL #1

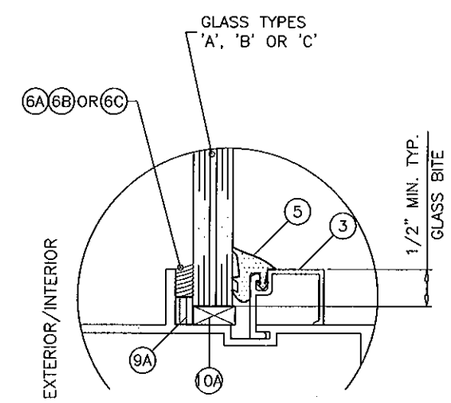

ALTERNATE GLAZING DETAIL #2

FOR GLAZING DETAIL #2 ONLY
LIMIT MAX. LOADS TO ±50.0 PSF
LIMIT MAX. GLASS AREA TO 29 SQ. FT.

ALLOWABLE LOADS FOR ALTERNATE SHAPES AS SHOWN ABOVE OR SIMILAR CAN BE VERIFIED BY INSCRIBING PICTURE WINDOW SHAPE WITHIN SQUARE OR RECTANGLE AS SHOWN IN DOTTED LINES AND OBTAINING ALLOWABLE LOADS FROM THOSE SHAPES. SINGLE LITES MAY BE INSTALLED VERTICALLY AS SHOWN ABOVE OR HORIZONTALLY.

FOR ALTERNATE SHAPES LIMIT MAX. LOADS TO ±90.0 PSF

SEE SHEET 3 FOR D.L.O. WIDTHS AND HEIGHTS.
USE ANCHOR TYPES A, B OR C AT 4" FROM FRAME ENDS AND 12" O.C. MAX. SPACING.

SILICONE SEALANT OPTIONS:
(6A) DOW CORNING 995
(6B) GE ULTRAGLAZE SSG4000
(6C) TREMCO PROGLAZE SSG

GLAZING OPTION

Trulite
GLASS & ALUMINUM SOLUTIONS™
http://www.trulite.com
800 FAIRWAY DRIVE, Suite 200
DEERFIELD BEACH, FL 33441
p. 800-432-8132 | f. 954-724-2083

PRODUCT:

Resistor
3000
STOREFRONT WALL-LMI

Resistor
BLAST & STORM PROTECTION™

REVN	DATE/REMARKS

ENGINEER:
MCY ENGINEERING, INC.
GLAZING CONSULTANT
9110 SW SUNSET DRIVE
MIAMI, FL 33173
P: 305-271-0117
Email: MCY.Engineering@att.net
www.MCYEngineering.com

STAMP:
YIPING WANG, P.E.
FLORIDA REGISTRATION
P.E. #55983
YIPING WANG LICENSE No 55983 STATE OF FLORIDA PROFESSIONAL ENGINEER
NOV 15 2011

PRODUCT CONTROL APPROVAL

PRODUCT REVISED
as complying with the Florida
Building Code
Acceptance No 11-1117.03
Expiration Date March 18, 2014
By Manuel Perez
Miami-Dade Product Control

DRAWN: S.L.	DRAWING No:
DATE: 9-22-11	2 OF 11
DWG: AD11-20	

DESIGN LOAD CAPACITY – PSF				
NOMINAL DIMS.		GLASS TYPE 'A'	GLASS TYPE 'B'	GLASS TYPE 'C'
D.L.O. WIDTH	D.L.O. HEIGHT	EXT. (+) INT. (–)	EXT. (+) INT. (–)	EXT. (+) INT. (–)
36"	87"	87.0	100.0	100.0
39"		87.0	100.0	100.0
42"		87.0	100.0	100.0
45"		87.0	100.0	100.0
48"		87.0	100.0	100.0
51"		87.0	100.0	100.0
54"		87.0	100.0	100.0
57"		87.0	100.0	100.0
60"		87.0	100.0	100.0
63"		87.0	100.0	100.0
66"		87.0	100.0	100.0
69"		87.0	100.0	100.0
72"		87.0	100.0	100.0
36"	90"	87.0	100.0	100.0
39"		87.0	100.0	100.0
42"		87.0	100.0	100.0
45"		87.0	100.0	100.0
48"		87.0	100.0	100.0
51"		87.0	100.0	100.0
54"		87.0	100.0	100.0
57"		87.0	100.0	100.0
60"		87.0	100.0	100.0
63"		87.0	100.0	100.0
66"		87.0	100.0	100.0
69"		87.0	100.0	100.0
72"		87.0	100.0	100.0
36"	93"	87.0	100.0	100.0
39"		87.0	100.0	100.0
42"		87.0	100.0	100.0
45"		87.0	100.0	100.0
48"		87.0	100.0	100.0
51"		87.0	100.0	100.0
54"		87.0	100.0	100.0
57"		87.0	100.0	100.0
60"		87.0	100.0	100.0
63"		87.0	100.0	100.0
66"		87.0	100.0	100.0
69"		87.0	100.0	100.0
72"		87.0	100.0	–
36"	96"	87.0	100.0	100.0
39"		87.0	100.0	100.0
42"		87.0	100.0	100.0
45"		87.0	100.0	100.0
48"		87.0	100.0	100.0
51"		87.0	100.0	100.0
54"		87.0	100.0	100.0
57"		87.0	100.0	100.0
60"		87.0	100.0	100.0
63"		87.0	100.0	100.0
66"		87.0	100.0	100.0
69"		87.0	100.0	–

DESIGN LOAD CAPACITY – PSF				
NOMINAL DIMS.		GLASS TYPE 'A'	GLASS TYPE 'B'	GLASS TYPE 'C'
D.L.O. WIDTH	D.L.O. HEIGHT	EXT. (+) INT. (–)	EXT. (+) INT. (–)	EXT. (+) INT. (–)
36"	99"	87.0	100.0	100.0
39"		87.0	100.0	100.0
42"		87.0	100.0	100.0
45"		87.0	100.0	100.0
48"		87.0	100.0	100.0
51"		87.0	100.0	100.0
54"		87.0	100.0	100.0
57"		87.0	100.0	100.0
60"		87.0	100.0	100.0
63"		87.0	100.0	100.0
66"		87.0	100.0	–
36"	102"	87.0	100.0	100.0
39"		87.0	100.0	100.0
42"		87.0	100.0	100.0
45"		87.0	100.0	100.0
48"		87.0	100.0	100.0
51"		87.0	100.0	100.0
54"		87.0	100.0	100.0
57"		87.0	100.0	100.0
60"		87.0	100.0	100.0
63"		87.0	100.0	100.0
66"		87.0	100.0	–
36"	105"	87.0	100.0	100.0
39"		87.0	100.0	100.0
42"		87.0	100.0	100.0
45"		87.0	100.0	100.0
48"		87.0	100.0	100.0
51"		87.0	100.0	100.0
54"		87.0	100.0	100.0
57"		87.0	100.0	100.0
60"		87.0	100.0	100.0
63"		87.0	100.0	–
36"	108"	87.0	100.0	100.0
39"		87.0	100.0	100.0
42"		87.0	100.0	100.0
45"		87.0	100.0	100.0
48"		87.0	100.0	100.0
51"		87.0	100.0	100.0
54"		87.0	100.0	100.0
57"		87.0	100.0	100.0
60"		87.0	100.0	100.0
63"		87.0	100.0	–
36"	111"	87.0	100.0	100.0
39"		87.0	100.0	100.0
42"		87.0	100.0	100.0
45"		87.0	100.0	100.0
48"		87.0	100.0	100.0
51"		87.0	100.0	100.0
54"		87.0	100.0	100.0
57"		87.0	100.0	100.0
60"		87.0	100.0	–

DESIGN LOAD CAPACITY – PSF				
NOMINAL DIMS.		GLASS TYPE 'A'	GLASS TYPE 'B'	GLASS TYPE 'C'
D.L.O. WIDTH	D.L.O. HEIGHT	EXT. (+) INT. (–)	EXT. (+) INT. (–)	EXT. (+) INT. (–)
36"	114"	87.0	100.0	100.0
39"		87.0	100.0	100.0
42"		87.0	100.0	100.0
45"		87.0	100.0	100.0
48"		87.0	100.0	100.0
51"		87.0	100.0	100.0
54"		87.0	100.0	100.0
56"		87.0	100.0	97.9
57"		87.0	100.0	–
36"	117"	87.0	100.0	100.0
39"		87.0	100.0	100.0
42"		87.0	100.0	100.0
45"		87.0	100.0	100.0
48"		87.0	100.0	100.0
51"		87.0	100.0	100.0
54"		87.0	100.0	100.0
57"		87.0	100.0	–
36"	120"	87.0	100.0	100.0
39"		87.0	100.0	100.0
42"		87.0	100.0	100.0
45"		87.0	100.0	100.0
48"		87.0	100.0	100.0
51"		87.0	100.0	100.0
54"		87.0	98.5	98.5

NOTE:
GLASS CAPACITIES ON THIS SHEET ARE BASED ON ASTM E1300–04 (3 SEC. GUSTS)

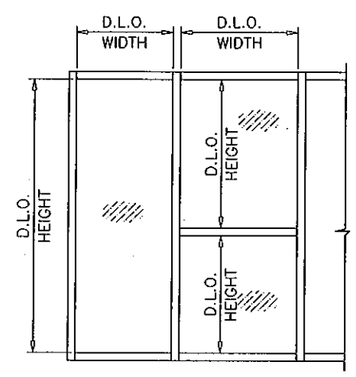

STEP 2: GLASS LOAD TABLES

Trulite
GLASS & ALUMINUM SOLUTIONS™
http://www.trulite.com
800 FAIRWAY DRIVE, Suite 200
DEERFIELD BEACH, FL 33441
p. 800-432-8132 | f. 954-724-2083

PRODUCT:

Resistor 3000
STOREFRONT WALL-LMI

Resistor
BLAST & STORM PROTECTION™

REVN	DATE/REMARKS

ENGINEER:
MCY ENGINEERING, INC.
GLAZING CONSULTANT
9110 SW SUNSET DRIVE
MIAMI, FL 33173
P: 305-271-0117
Email: MCY.Engineering@att.net
www.MCYEngineering.com

STAMP:
YIPING WANG, P.E.
FLORIDA REGISTRATION
PE #55983
YIPING WANG LICENSE No 55983 STATE OF FLORIDA PROFESSIONAL ENGINEER
NOV 15 2011

PRODUCT CONTROL APPROVAL

PRODUCT REVISED
as complying with the Florida Building Code
Acceptance No 11-1117.03
Expiration Date MARCH 18, 2014
By Manuel Perez
Miami-Dade Product Control

DRAWN: S.L.	DRAWING No:
DATE: 9–22–11	3 OF 11
DWG: AD11–20	

MULLION LOAD CAPACITY – PSF
WITHOUT INTERMEDIATE HORIZONTALS

NOMINAL DIMS.		WITHOUT REINFORCING	WITH REINFORCING
WIDTH (W)	FRAME HEIGHT	EXT.(+) / INT.(–)	EXT.(+) / INT.(–)
24"	78"	87.5	100.0
30"		87.5	100.0
36"		87.5	100.0
42"		87.5	100.0
48"		87.5	100.0
54"		87.5	100.0
60"		87.5	100.0
66"		87.5	100.0
72"		87.5	100.0
24"	84"	87.5	100.0
30"		87.5	100.0
36"		87.5	100.0
42"		87.5	100.0
48"		87.5	100.0
54"		87.5	100.0
60"		85.6	100.0
66"		81.3	100.0
72"		78.5	100.0
24"	90"	87.5	100.0
30"		87.5	100.0
36"		87.5	100.0
42"		87.5	100.0
48"		81.7	100.0
54"		75.0	100.0
60"		70.1	100.0
66"		66.5	100.0
72"		63.9	100.0
24"	96"	87.5	100.0
30"		87.5	100.0
36"		84.4	100.0
42"		73.9	100.0
48"		66.3	100.0
54"		60.7	100.0
60"		56.4	100.0
66"		53.2	100.0
72"		50.8	100.0
24"	102"	87.5	100.0
30"		82.6	100.0
36"		69.9	100.0
42"		61.0	100.0
48"		54.6	100.0
54"		49.8	100.0
60"		46.1	95.9
66"		43.3	90.0
72"		–	85.6

MULLION LOAD CAPACITY – PSF
WITHOUT INTERMEDIATE HORIZONTALS

NOMINAL DIMS.		WITHOUT REINFORCING	WITH REINFORCING
WIDTH (W)	FRAME HEIGHT	EXT.(+) / INT.(–)	EXT.(+) / INT.(–)
24"	108"	85.7	100.0
30"		69.3	100.0
36"		58.5	100.0
42"		51.0	100.0
48"		45.5	94.7
54"		41.4	86.1
60"		38.2	79.5
66"		35.7	74.3
24"	114"	72.7	100.0
30"		58.7	100.0
36"		49.6	100.0
42"		43.1	89.7
48"		38.4	79.8
54"		34.8	72.4
60"		32.0	66.7
24"	120"	62.2	100.0
30"		50.2	100.0
36"		42.3	88.0
42"		36.8	76.5
48"		32.7	68.0
54"		29.6	61.5
60"		27.2	56.5

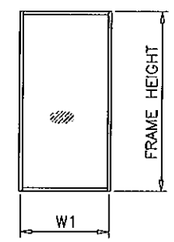

WIDTH (W) = W1 (JAMB)

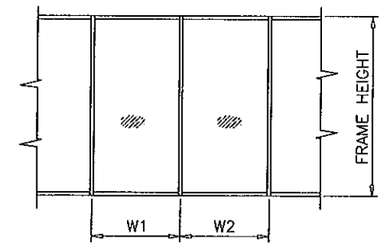

WIDTH (W) = $\frac{W1 + W2}{2}$

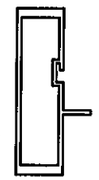

	Ix IN^4	Sx IN^3
ALUM	4.0975	1.8066

FRAME JAMB DOOR MULLION

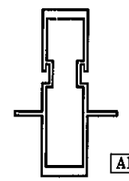

	Ix IN^4	Sx IN^3
ALUM	4.1419	1.8138

INTERMEDIATE MULLION

WITHOUT REINFORCING

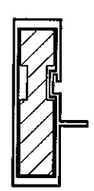

	Ix IN^4	Sx IN^3
ALUM	8.5717	3.7792

FRAME JAMB DOOR MULLION

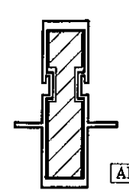

	Ix IN^4	Sx IN^3
ALUM	8.6161	3.7730

INTERMEDIATE MULLION

WITH REINFORCING

STEP 3: MULLION LOAD CAPACITIES

Trulite
GLASS & ALUMINUM SOLUTIONS™
http://www.trulite.com
800 FAIRWAY DRIVE, Suite 200
DEERFIELD BEACH, FL 33441
p. 800-432-8132 | f. 954-724-2083

PRODUCT:

Resistor 3000
STOREFRONT WALL-LMI

Resistor
BLAST & STORM PROTECTION™

REVN	DATE/REMARKS

ENGINEER:
MCY ENGINEERING, INC.
GLAZING CONSULTANT
9110 SW SUNSET DRIVE
MIAMI, FL 33173
P: 305-271-0117
Email: MCY.Engineering@att.net
www.MCYEngineering.com

STAMP:
YIPING WANG, P.E.
FLORIDA REGISTRATION
No. 55983
YIPING WANG LICENSE No 55983 STATE OF FLORIDA PROFESSIONAL ENGINEER
NOV 15 2011

PRODUCT CONTROL APPROVAL:

PRODUCT REVISED
as complying with the Florida
Building Code
Acceptance No 11-1117.03
Expiration Date March 18, 2014
By Manuel Perez
Miami-Dade Product Control

DRAWN: S.L.	DRAWING No:
DATE: 9-22-11	4 OF 11
DWG: AD11-20	

MULLION LOAD CAPACITY – PSF WITH INTERMEDIATE HORIZONTALS			
NOMINAL DIMS.		WITHOUT REINFORCING	WITH REINFORCING
WIDTH (W)	FRAME HEIGHT	EXT.(+) / INT.(–)	EXT.(+) / INT.(–)
24"	78"	87.5	100.0
30"		87.5	100.0
36"		87.5	100.0
42"		87.5	100.0
48"		87.5	100.0
54"		87.5	100.0
60"		82.9	100.0
66"		75.4	100.0
72"		69.1	100.0
24"	84"	87.5	100.0
30"		87.5	100.0
36"		87.5	100.0
42"		87.5	100.0
48"		87.5	100.0
54"		79.0	100.0
60"		71.1	100.0
66"		64.6	100.0
72"		59.2	100.0
24"	90"	87.5	100.0
30"		87.5	100.0
36"		87.5	100.0
42"		83.1	100.0
48"		72.7	100.0
54"		64.6	100.0
60"		58.2	100.0
66"		52.9	100.0
72"		48.5	100.0
24"	96"	87.5	100.0
30"		87.5	100.0
36"		79.9	100.0
42"		68.5	100.0
48"		59.9	100.0
54"		53.3	100.0
60"		47.9	99.7
66"		43.6	90.7
72"		39.9	83.1
24"	102"	87.5	100.0
30"		79.9	100.0
36"		66.6	100.0
42"		57.1	100.0
48"		50.0	100.0
54"		44.4	92.4
60"		40.0	83.1
66"		36.3	75.6
72"		–	69.3

MULLION LOAD CAPACITY – PSF WITH INTERMEDIATE HORIZONTALS			
NOMINAL DIMS.		WITHOUT REINFORCING	WITH REINFORCING
WIDTH (W)	FRAME HEIGHT	EXT.(+) / INT.(–)	EXT.(+) / INT.(–)
24"	108"	84.2	100.0
30"		67.3	100.0
36"		56.1	100.0
42"		48.1	100.0
48"		42.1	87.5
54"		37.4	77.8
60"		33.7	70.0
66"		30.6	63.7
24"	114"	71.6	100.0
30"		57.3	100.0
36"		47.7	99.3
42"		40.9	85.1
48"		35.8	74.4
54"		31.8	66.2
60"		28.6	59.6
24"	120"	61.4	100.0
30"		49.1	100.0
36"		40.9	85.1
42"		35.1	72.9
48"		30.7	63.8
54"		27.3	56.7
60"		24.5	51.1

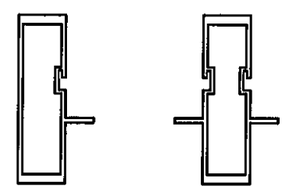

WITHOUT REINFORCING

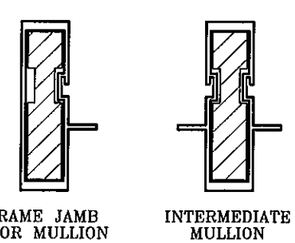

WITH REINFORCING

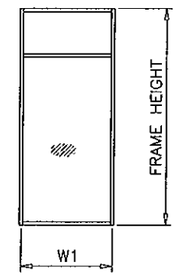

WIDTH (W) = W1 (JAMB)

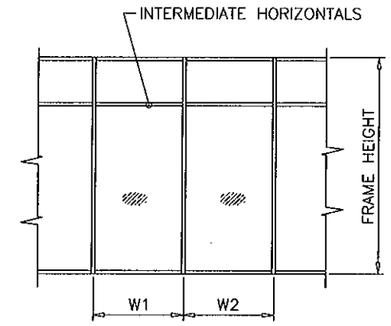

$$\text{WIDTH (W)} = \frac{W1 + W2}{2}$$

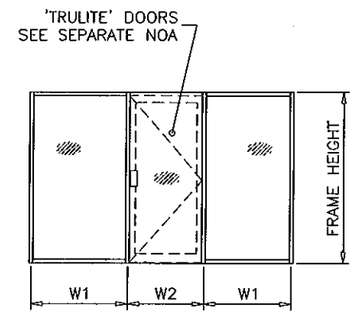

$$\text{WIDTH (W)} = \frac{W1 + W2}{2}$$

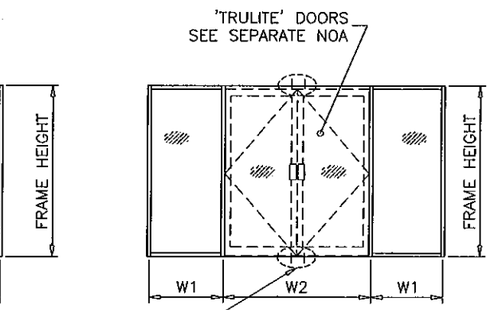

$$\text{WIDTH (W)} = \frac{W1}{2} + \frac{W2}{4}$$

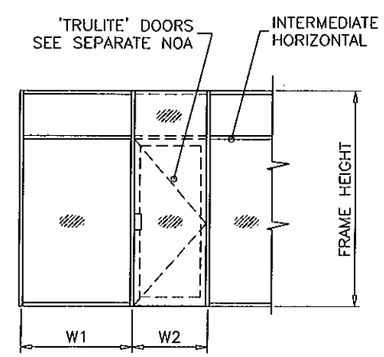

$$\text{WIDTH (W)} = \frac{W1 + W2}{2}$$

STEP 3: MULLION LOAD CAPACITIES

Trulite
GLASS & ALUMINUM SOLUTIONS™
http://www.trulite.com
800 FAIRWAY DRIVE, Suite 200
DEERFIELD BEACH, FL 33441
p. 800-432-8132 | f. 954-724-2083

PRODUCT:

Resistor 3000
STOREFRONT WALL-LMI

Resistor
BLAST & STORM PROTECTION™

REVN	DATE/REMARKS

ENGINEER:
MCY ENGINEERING, INC.
GLAZING CONSULTANT
9110 SW SUNSET DRIVE
MIAMI, FL 33173
P: 305-271-0117
Email: MCY.Engineering@att.net
www.MCYEngineering.com

STAMP:

YIPING WANG, P.E.
FLORIDA REGISTRATION
P.E. #55983
CERT. 26671
YIPING WANG LICENSE No 55983 STATE OF FLORIDA PROFESSIONAL ENGINEER
NOV 15 2011

PRODUCT CONTROL APPROVAL

PRODUCT REVISED
as complying with the Florida Building Code
Acceptance No 11-1117.03
Expiration Date March 18, 2014
By Manuel Perez
Miami Dade Product Control

DRAWN: S.L.	DRAWING No:
DATE: 9-22-11	5 OF 11
DWG: AD11-20	

MULLION LOAD CAPACITY – PSF AT DOUBLE DOOR WITH TRANSOM

NOMINAL DIMS.				WITHOUT REINFORCING	WITH REINFORCING
WIDTH (W1)	WIDTH (W2)	LENGTH (A)	LENGTH (L)	EXT.(+) INT.(–)	EXT.(+) INT.(–)
60"	30"	96"	102"	71.1	87.5
	33"			68.1	87.5
	36"			65.3	87.5
	39"			62.7	87.5
	42"			60.3	87.5
	48"			56.0	87.5
	54"			52.3	87.5
72"	30"			64.5	87.5
	33"			62.0	87.5
	36"			59.6	87.5
	39"			57.5	87.5
	42"			55.5	87.5
	48"			51.8	87.5
	54"			48.6	87.5
60"	30"	96"	108"	56.8	87.5
	33"			54.5	87.5
	36"			52.4	87.5
	39"			50.4	87.5
	42"			48.6	87.5
	48"			45.3	87.5
	54"			42.4	87.5
72"	30"			51.3	87.5
	33"			49.4	87.5
	36"			47.6	87.5
	39"			46.0	87.5
	42"			44.5	87.5
	48"			41.7	87.2
	54"			39.2	82.1
60"	30"	96"	114"	46.2	87.5
	33"			44.4	87.5
	36"			42.8	87.5
	39"			41.2	86.2
	42"			39.8	83.2
	48"			37.2	77.7
	54"			34.9	72.9
72"	30"			41.6	87.5
	33"			40.1	83.9
	36"			38.8	81.1
	39"			37.5	78.4
	42"			36.3	75.9
	48"			34.1	71.3
	54"			32.2	67.3

MULLION LOAD CAPACITY – PSF AT DOUBLE DOOR WITH TRANSOM

NOMINAL DIMS.				WITHOUT REINFORCING	WITH REINFORCING
WIDTH (W1)	WIDTH (W2)	LENGTH (A)	LENGTH (L)	EXT.(+) INT.(–)	EXT.(+) INT.(–)
60"	30"	96"	120"	38.3	80.0
	33"			36.8	77.0
	36"			35.5	74.2
	39"			34.2	71.6
	42"			33.1	69.1
	48"			31.0	64.7
	54"			29.1	60.9
72"	30"			34.3	71.8
	33"			33.2	69.3
	36"			32.1	67.1
	39"			31.0	64.9
	42"			30.1	62.9
	48"			28.3	59.2

ANCHORS TYPE	TOTAL NO. OF ANCHORS AT DOOR MULLION HEAD	
	AT FIX. LITE	AT DOOR
A	4	3
B	3	2
C	3	2

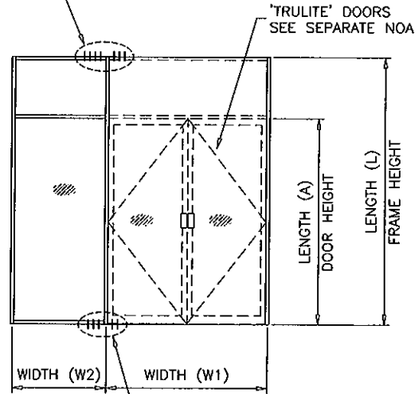

ANCHORS TYPE	TOTAL NO. OF ANCHORS AT DOOR MULLION SILL	
	AT FIX. LITE	AT DOOR
A	3	2
B	2	2
C	2	2

MULLION LOAD CAPACITY – PSF AT DOUBLE DOOR WITH TRANSOM

NOMINAL DIMS.				WITHOUT REINFORCING	WITH REINFORCING
WIDTH (W1)	WIDTH (W2)	LENGTH (A)	LENGTH (L)	EXT.(+) INT.(–)	EXT.(+) INT.(–)
60"	30"	90"	96"	85.0	87.5
	33"			81.3	87.5
	36"			78.0	87.5
	39"			74.9	87.5
	42"			72.1	87.5
	48"			67.0	87.5
	54"			62.6	87.5
72"	30"			77.0	87.5
	33"			74.0	87.5
	36"			71.3	87.5
	39"			68.7	87.5
	42"			66.3	87.5
	48"			62.0	87.5
	54"			58.2	87.5
60"	30"	90"	102"	67.0	87.5
	33"			64.3	87.5
	36"			61.8	87.5
	39"			59.5	87.5
	42"			57.3	87.5
	48"			53.5	87.5
	54"			50.1	87.5
72"	30"			60.5	87.5
	33"			58.3	87.5
	36"			56.2	87.5
	39"			54.3	87.5
	42"			52.5	87.5
	48"			49.2	87.5
	54"			46.3	87.5
60"	30"	90"	108"	54.0	87.5
	33"			51.9	87.5
	36"			49.9	87.5
	39"			48.1	87.5
	42"			46.5	87.5
	48"			43.4	87.5
	54"			40.8	85.3
72"	30"			48.5	87.5
	33"			46.8	87.5
	36"			45.2	87.5
	39"			43.7	87.5
	42"			42.4	87.5
	48"			39.8	83.3
	54"			37.6	78.6

MULLION LOAD CAPACITY – PSF AT DOUBLE DOOR WITH TRANSOM

NOMINAL DIMS.				WITHOUT REINFORCING	WITH REINFORCING
WIDTH (W1)	WIDTH (W2)	LENGTH (A)	LENGTH (L)	EXT.(+) INT.(–)	EXT.(+) INT.(–)
60"	30"	90"	114"	44.3	87.5
	33"			42.6	87.5
	36"			41.1	85.9
	39"			39.6	82.9
	42"			38.3	80.1
	48"			35.9	75.0
	54"			33.7	70.6
72"	30"			39.7	83.0
	33"			38.3	80.2
	36"			37.1	77.6
	39"			35.9	75.1
	42"			34.8	72.8
	48"			32.8	68.6
	54"			31.0	64.8
60"	30"	90"	120"	36.9	77.1
	33"			35.5	74.3
	36"			34.3	71.7
	39"			33.1	69.2
	42"			32.0	67.0
	48"			30.0	62.8
	54"			28.3	59.2
72"	30"			33.0	69.0
	33"			31.9	66.8
	36"			30.9	64.6
	39"			29.9	62.6
	42"			29.0	60.7
	48"			27.4	57.3

STEP 3: MULLION LOAD CAPACITIES

Trulite
GLASS & ALUMINUM SOLUTIONS™
http://www.trulite.com
800 FAIRWAY DRIVE, Suite 200
DEERFIELD BEACH, FL 33441
p. 800-432-8132 | f. 954-724-2083

PRODUCT:

Resistor 3000
STOREFRONT WALL-LMI

Resistor
BLAST & STORM PROTECTION™

REVN	DATE/REMARKS

ENGINEER:
MCY ENGINEERING, INC.
GLAZING CONSULTANT
9110 SW SUNSET DRIVE
MIAMI, FL 33173
P: 305-271-0117
Email: MCY.Engineering@att.net
www.MCYEngineering.com

STAMP:
YIPING WANG, P.E.
FLORIDA REGISTRATION
No. 55983
YIPING WANG LICENSE No. 55983 STATE OF FLORIDA PROFESSIONAL ENGINEER
NOV 15 2011

PRODUCT CONTROL APPROVAL:

PRODUCT REVISED
as complying with the Florida Building Code
Acceptance No 11-1117.03
Expiration Date March 18, 2014
By
Miami-Dade Product Control

DRAWN: S.L.	DRAWING No:
DATE: 9-22-11	**6 OF 11**
DWG: AD11-20	

MULLION LOAD CAPACITY – PSF AT DOUBLE DOOR WITH TRANSOM

NOMINAL DIMS.				WITHOUT REINFORCING	WITH REINFORCING
WIDTH (W1)	WIDTH (W2)	LENGTH (A)	LENGTH (L)	EXT.(+) INT.(–)	EXT.(+) INT.(–)
60"	30"	84"	90"	87.5	87.5
	33"			87.5	87.5
	36"			87.5	87.5
	39"			87.5	87.5
	42"			87.2	87.5
	48"			81.0	87.5
	54"			75.7	87.5
72"	30"			87.5	87.5
	33"			87.5	87.5
	36"			86.1	87.5
	39"			83.0	87.5
	42"			80.1	87.5
	48"			74.9	87.5
	54"			70.3	87.5
60"	30"	84"	96"	79.8	87.5
	33"			76.6	87.5
	36"			73.7	87.5
	39"			70.9	87.5
	42"			68.4	87.5
	48"			63.8	87.5
	54"			59.8	87.5
72"	30"			72.0	87.5
	33"			69.4	87.5
	36"			66.9	87.5
	39"			64.7	87.5
	42"			62.5	87.5
	48"			58.7	87.5
	54"			55.3	87.5
60"	30"	84"	102"	63.5	87.5
	33"			61.1	87.5
	36"			58.8	87.5
	39"			56.7	87.5
	42"			54.8	87.5
	48"			51.2	87.5
	54"			48.1	87.5
72"	30"			57.1	87.5
	33"			55.1	87.5
	36"			53.2	87.5
	39"			51.5	87.5
	42"			49.9	87.5
	48"			46.9	87.5
	54"			44.3	87.5

MULLION LOAD CAPACITY – PSF AT DOUBLE DOOR WITH TRANSOM

NOMINAL DIMS.				WITHOUT REINFORCING	WITH REINFORCING
WIDTH (W1)	WIDTH (W2)	LENGTH (A)	LENGTH (L)	EXT.(+) INT.(–)	EXT.(+) INT.(–)
60"	30"	84"	108"	51.6	87.5
	33"			49.7	87.5
	36"			47.9	87.5
	39"			46.2	87.5
	42"			44.7	87.5
	48"			41.9	87.5
	54"			39.4	82.4
72"	30"			46.2	87.5
	33"			44.7	87.5
	36"			43.2	87.5
	39"			41.9	87.5
	42"			40.6	84.9
	48"			38.3	80.0
	54"			36.2	75.7
60"	30"	84"	114"	42.6	87.5
	33"			41.1	85.9
	36"			39.6	82.9
	39"			38.3	80.1
	42"			37.1	77.5
	48"			34.8	72.8
	54"			32.8	68.6
72"	30"			38.1	79.7
	33"			36.9	77.1
	36"			35.7	74.7
	39"			34.6	72.4
	42"			33.6	70.3
	48"			31.7	66.3
	54"			30.0	62.8
60"	30"	84"	120"	35.7	74.7
	33"			34.5	72.1
	36"			33.3	69.6
	39"			32.2	67.3
	42"			31.2	65.2
	48"			29.3	61.2
	54"			27.6	57.8
72"	30"			31.9	66.8
	33"			30.9	64.6
	36"			29.9	62.6
	39"			29.0	60.7
	42"			28.2	59.0
	48"			26.6	55.7

MULLION LOAD CAPACITY – PSF AT DOUBLE DOOR WITH TRANSOM

NOMINAL DIMS.				WITHOUT REINFORCING	WITH REINFORCING
WIDTH (W1)	WIDTH (W2)	LENGTH (A)	LENGTH (L)	EXT.(+) INT.(–)	EXT.(+) INT.(–)
60"	30"	80"	90"	87.5	87.5
	33"			87.5	87.5
	36"			87.5	87.5
	39"			87.1	87.5
	42"			83.9	87.5
	48"			78.3	87.5
	54"			73.3	87.5
72"	30"			87.5	87.5
	33"			85.4	87.5
	36"			82.3	87.5
	39"			79.5	87.5
	42"			76.9	87.5
	48"			72.1	87.5
	54"			67.8	87.5
60"	30"	80"	96"	76.9	87.5
	33"			73.9	87.5
	36"			71.1	87.5
	39"			68.5	87.5
	42"			66.2	87.5
	48"			61.9	87.5
	54"			58.1	87.5
72"	30"			69.1	87.5
	33"			66.7	87.5
	36"			64.4	87.5
	39"			62.3	87.5
	42"			60.3	87.5
	48"			56.7	87.5
	54"			53.5	87.5
60"	30"	80"	102"	61.6	87.5
	33"			59.3	87.5
	36"			57.1	87.5
	39"			55.1	87.5
	42"			53.3	87.5
	48"			49.9	87.5
	54"			47.0	87.5
72"	30"			55.2	87.5
	33"			53.3	87.5
	36"			51.6	87.5
	39"			49.9	87.5
	42"			48.4	87.5
	48"			45.6	87.5
	54"			43.1	87.5

MULLION LOAD CAPACITY – PSF AT DOUBLE DOOR WITH TRANSOM

NOMINAL DIMS.				WITHOUT REINFORCING	WITH REINFORCING
WIDTH (W1)	WIDTH (W2)	LENGTH (A)	LENGTH (L)	EXT.(+) INT.(–)	EXT.(+) INT.(–)
60"	30"	80"	108"	50.3	87.5
	33"			48.4	87.5
	36"			46.7	87.5
	39"			45.2	87.5
	42"			43.7	87.5
	48"			41.0	85.8
	54"			38.6	80.8
72"	30"			44.9	87.5
	33"			43.5	87.5
	36"			42.1	87.5
	39"			40.8	85.4
	42"			39.6	82.8
	48"			37.4	78.2
	54"			35.4	74.1
60"	30"	80"	114"	41.7	87.3
	33"			40.2	84.2
	36"			38.9	81.3
	39"			37.6	78.6
	42"			36.4	76.1
	48"			34.2	71.5
	54"			32.2	67.4
72"	30"			37.2	77.9
	33"			36.1	75.4
	36"			34.9	73.1
	39"			33.9	70.9
	42"			32.9	68.9
	48"			31.1	65.1
	54"			29.5	61.7
60"	30"	80"	120"	35.1	73.5
	33"			33.9	70.9
	36"			32.8	68.5
	39"			31.7	66.3
	42"			30.7	64.2
	48"			28.9	60.4
	54"			27.2	57.0
72"	30"			31.3	65.5
	33"			30.3	63.4
	36"			29.4	61.5
	39"			28.5	59.7
	42"			27.7	58.0
	48"			26.2	54.9

STEP 3: MULLION LOAD CAPACITIES

Trulite
GLASS & ALUMINUM SOLUTIONS™
http://www.trulite.com
800 FAIRWAY DRIVE, Suite 200
DEERFIELD BEACH, FL 33441
p. 800-432-8132 | f. 954-724-2083

PRODUCT:

Resistor 3000
STOREFRONT WALL-LMI

Resistor
BLAST & STORM PROTECTION™

REVN	DATE/REMARKS

ENGINEER:
MCY ENGINEERING, INC.
GLAZING CONSULTANT
9110 SW SUNSET DRIVE
MIAMI, FL 33173
P: 305-271-0117
Email: MCY.Engineering@att.net
www.MCYEngineering.com

STAMP:

YIPING WANG, P.E.
FLORIDA REGISTRATION
LICENSE #55983
YIPING WANG LICENSE No. 55983 STATE OF FLORIDA PROFESSIONAL ENGINEER
NOV 15 2011

PRODUCT CONTROL APPROVAL

PRODUCT REVISED
as complying with the Florida Building Code
Acceptance No 11-1117.03
Expiration Date MARCH 18, 2014
By Manuel Perez
Miami-Dade Product Control

DRAWN: S.L.	DRAWING No:
DATE: 9-22-11	7 OF 11
DWG: AD11-20	

ANCHOR LOAD CAPACITY – PSF EXT.(+) & INT.(–)								
NOMINAL DIMS.		ANCHORS TYPE 'A'			ANCHORS TYPE 'B'		ANCHORS TYPE 'C'	
WIDTH (W)	FRAME HEIGHT	'A2'	'A3'	'A4'	'B2'	'B3'	'C2'	'C3'
24"	78"	100.0	100.0	100.0	100.0	100.0	100.0	100.0
30"		100.0	100.0	100.0	100.0	100.0	100.0	100.0
36"		100.0	100.0	100.0	100.0	100.0	100.0	100.0
42"		100.0	100.0	100.0	100.0	100.0	100.0	100.0
48"		90.8	100.0	100.0	100.0	100.0	100.0	100.0
54"		80.7	100.0	100.0	100.0	100.0	100.0	100.0
60"		72.6	100.0	100.0	94.5	100.0	97.2	100.0
66"		66.0	99.0	100.0	85.9	100.0	88.4	100.0
72"		60.5	90.8	100.0	78.8	100.0	81.0	100.0
24"	84"	100.0	100.0	100.0	100.0	100.0	100.0	100.0
30"		100.0	100.0	100.0	100.0	100.0	100.0	100.0
36"		100.0	100.0	100.0	100.0	100.0	100.0	100.0
42"		96.3	100.0	100.0	100.0	100.0	100.0	100.0
48"		84.3	100.0	100.0	100.0	100.0	100.0	100.0
54"		74.9	100.0	100.0	97.5	100.0	100.0	100.0
60"		67.4	100.0	100.0	87.8	100.0	90.3	100.0
66"		61.3	91.9	100.0	79.8	100.0	82.1	100.0
72"		56.2	84.3	100.0	73.1	100.0	75.2	100.0
24"	90"	100.0	100.0	100.0	100.0	100.0	100.0	100.0
30"		100.0	100.0	100.0	100.0	100.0	100.0	100.0
36"		100.0	100.0	100.0	100.0	100.0	100.0	100.0
42"		89.9	100.0	100.0	100.0	100.0	100.0	100.0
48"		78.7	100.0	100.0	100.0	100.0	100.0	100.0
54"		69.9	100.0	100.0	91.0	100.0	93.6	100.0
60"		62.9	94.4	100.0	81.9	100.0	84.3	100.0
66"		57.2	85.8	100.0	74.5	100.0	76.6	100.0
72"		52.4	78.7	100.0	68.3	100.0	70.2	100.0
24"	96"	100.0	100.0	100.0	100.0	100.0	100.0	100.0
30"		100.0	100.0	100.0	100.0	100.0	100.0	100.0
36"		98.3	100.0	100.0	100.0	100.0	100.0	100.0
42"		84.3	100.0	100.0	100.0	100.0	100.0	100.0
48"		73.8	100.0	100.0	96.0	100.0	98.8	100.0
54"		65.6	98.3	100.0	85.3	100.0	87.8	100.0
60"		59.0	88.5	100.0	76.8	100.0	79.0	100.0
66"		53.6	80.5	100.0	69.8	100.0	71.8	100.0
72"		49.2	73.8	98.3	64.0	96.0	65.8	98.8
24"	102"	100.0	100.0	100.0	100.0	100.0	100.0	100.0
30"		100.0	100.0	100.0	100.0	100.0	100.0	100.0
36"		92.5	100.0	100.0	100.0	100.0	100.0	100.0
42"		79.3	100.0	100.0	100.0	100.0	100.0	100.0
48"		69.4	100.0	100.0	90.4	100.0	92.9	100.0
54"		61.7	92.5	100.0	80.3	100.0	82.6	100.0
60"		55.5	83.3	100.0	72.3	100.0	74.4	100.0
66"		50.5	75.7	100.0	65.7	98.6	67.6	100.0
72"		46.3	69.4	92.5	60.2	90.4	62.0	92.9
24"	108"	100.0	100.0	100.0	100.0	100.0	100.0	100.0
30"		100.0	100.0	100.0	100.0	100.0	100.0	100.0
36"		87.4	100.0	100.0	100.0	100.0	100.0	100.0
42"		74.9	100.0	100.0	97.5	100.0	100.0	100.0
48"		65.6	98.3	100.0	85.3	100.0	87.8	100.0
54"		58.3	87.4	100.0	75.9	100.0	78.0	100.0
60"		52.4	78.7	100.0	68.3	100.0	70.2	100.0
66"		47.7	71.5	95.4	62.1	93.1	63.8	95.8

ANCHOR LOAD CAPACITY – PSF EXT.(+) & INT.(–)								
NOMINAL DIMS.		ANCHORS TYPE 'A'			ANCHORS TYPE 'B'		ANCHORS TYPE 'C'	
WIDTH (W)	FRAME HEIGHT	'A2'	'A3'	'A4'	'B2'	'B3'	'C2'	'C3'
24"	114"	100.0	100.0	100.0	100.0	100.0	100.0	100.0
30"		99.4	100.0	100.0	100.0	100.0	100.0	100.0
36"		82.8	100.0	100.0	100.0	100.0	100.0	100.0
42"		71.0	100.0	100.0	92.4	100.0	95.0	100.0
48"		62.1	93.2	100.0	80.8	100.0	83.2	100.0
54"		55.2	82.8	100.0	71.9	100.0	73.9	100.0
60"		49.7	74.5	99.4	64.7	97.0	66.5	99.8
24"	120"	100.0	100.0	100.0	100.0	100.0	100.0	100.0
30"		94.4	100.0	100.0	100.0	100.0	100.0	100.0
36"		78.7	100.0	100.0	100.0	100.0	100.0	100.0
42"		67.4	100.0	100.0	87.8	100.0	90.3	100.0
48"		59.0	88.5	100.0	76.8	100.0	79.0	100.0
54"		52.4	78.7	100.0	68.3	100.0	70.2	100.0
60"		47.2	70.8	94.4	61.4	92.2	63.2	94.8

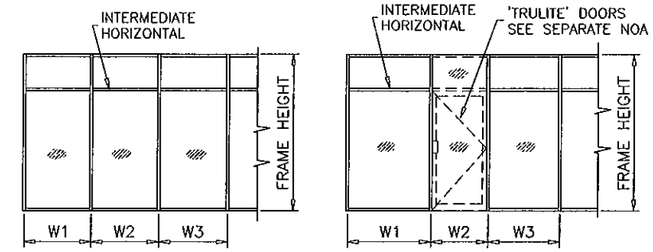

WIDTH (W) = W1
AT FRAME JAMB

WIDTH (W) = $\frac{W2 + W3}{2}$
AT FRAME MULLION

WIDTH (W) = W1
AT FRAME JAMB

WIDTH (W) = $\frac{W2 + W3}{2}$
AT FRAME MULLION

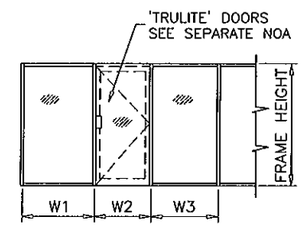

WIDTH (W) = W1
AT FRAME JAMB

WIDTH (W) = $\frac{W2 + W3}{2}$
AT FRAME MULLION

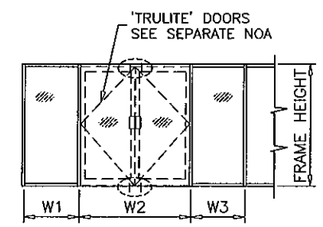

WIDTH (W) = W1
AT FRAME JAMB

WIDTH (W) = $\frac{W2 + W3}{2}$
AT FRAME MULLION

ANCHORS TYPES: SEE SHEET 9 FOR DESCRIPTION

A2 = (2) ANCHORS TYPE 'A' AT JAMB OR EACH SIDE OF MULLION
A3 = (3) ANCHORS TYPE 'A' AT JAMB OR EACH SIDE OF MULLION
A4 = (4) ANCHORS TYPE 'A' AT JAMB OR EACH SIDE OF MULLION

B2 = (2) ANCHORS TYPE 'B' AT JAMB OR EACH SIDE OF MULLION
B3 = (3) ANCHORS TYPE 'B' AT JAMB OR EACH SIDE OF MULLION

C2 = (2) ANCHORS TYPE 'C' AT JAMB OR EACH SIDE OF MULLION
C3 = (3) ANCHORS TYPE 'C' AT JAMB OR EACH SIDE OF MULLION

ALL OTHER ANCHORS TO BE SPACED AS PER ELEVATION.

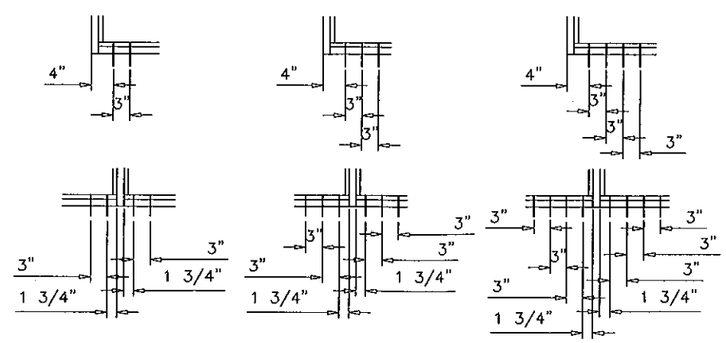

A2, B2, C2 A3, B3, C3 A4

STEP 4: ANCHOR LOAD CAPACITY

Trulite
GLASS & ALUMINUM SOLUTIONS™
http://www.trulite.com
800 FAIRWAY DRIVE, Suite 200
DEERFIELD BEACH, FL 33441
p. 800-432-8132 | f. 954-724-2083

PRODUCT:

Resistor 3000
STOREFRONT WALL-LMI

Resistor
BLAST & STORM PROTECTION™

REVN	DATE/REMARKS

ENGINEER:
MCY ENGINEERING, INC.
GLAZING CONSULTANT
9110 SW SUNSET DRIVE
MIAMI, FL 33173
P: 305-271-0117
Email: MCY.Engineering@att.net
www.MCYEngineering.com

STAMP:
YIPING WANG, P.E.
FLORIDA REGISTRATION
PE #55983
C.A.N. 28677
YIPING WANG LICENSE No 55983 STATE OF FLORIDA PROFESSIONAL ENGINEER
NOV 15 2011

PRODUCT CONTROL APPROVAL:

PRODUCT REVISED
as complying with the Florida Building Code
Acceptance No 11-1117.03
Expiration Date MARCH 18, 2014
By
Miami Dade Product Control

DRAWN: S.L.	DRAWING No:
DATE: 9–22–11	8 OF 11
DWG: AD11–20	

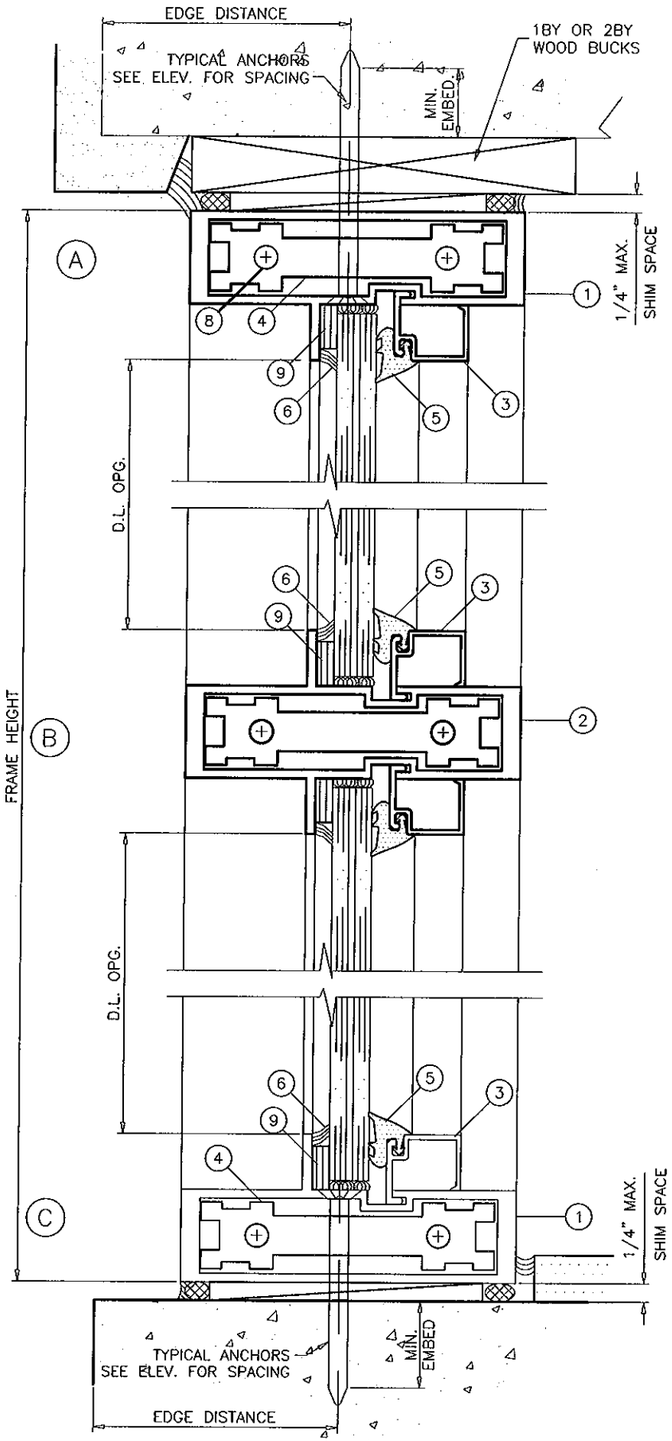

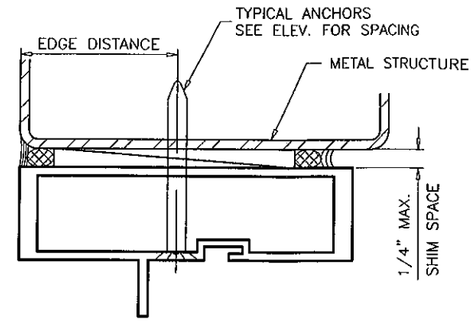

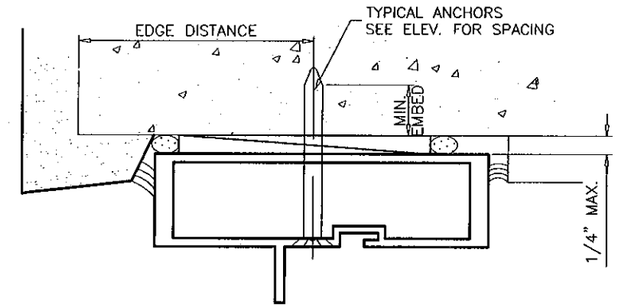

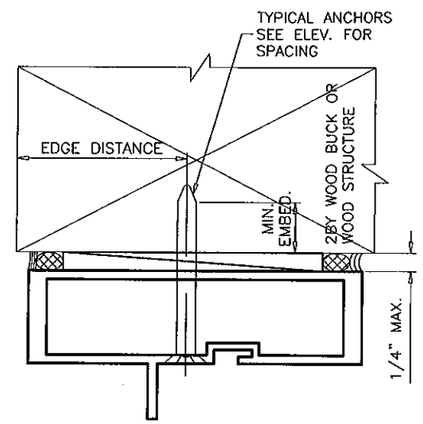

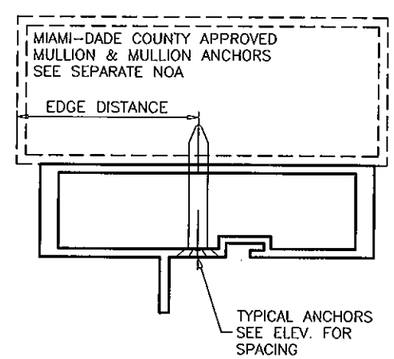

WOOD BUCKS AND METAL STRUCTURES NOT BY TRULITE. MUST SUSTAIN LOADS IMPOSED BY GLAZING SYSTEM AND TRANSFER THEM TO THE BUILDING STRUCTURE.

TYPICAL ANCHORS:

SEE ELEVATIONS FOR SPACING

TYPE 'A' 1/4" DIA. ULTRACON BY 'ELCO' (Fu 177 KSI, Fy=155 KSI)
INTO 2BY WOOD BUCKS OR WOOD STRUCTURES
1-3/8" MIN. PENETRATION INTO WOOD INTO CONC.

THRU WOOD BUCKS INTO CONC. OR MASONRY
1-1/4" MIN. EMBED INTO CONC.

TYPE 'B' 1/4" DIA. ULTRACON BY 'ELCO' (Fu 177 KSI, Fy=155 KSI)
DIRECTLY INTO CONCRETE OR MASONRY
1-5/8" MIN. EMBED INTO CONCRETE OR MASONRY.

TYPE 'C' #14 SMS OR SELF DRILLING SCREWS (GRADE 2 CRS)
INTO MIAMI-DADE COUNTY APPROVED MULLIONS
(1/8" THK. MIN.) INTO METAL STRUCTURE.

STEEL : 12 GA. MIN. (Fy = 36 KSI MIN.)
ALUMINUM : 1/8" THK. MIN. (6063-T5 MIN.)
(STEEL IN CONTACT WITH ALUMINUM TO BE PLATED OR PAINTED)

TYPICAL EDGE DISTANCE

INTO CONCRETE AND MASONRY = 2-1/2" MIN.
INTO WOOD STRUCTURE = 1" MIN.
INTO METAL STRUCTURE = 3/4" MIN.

CONCRETE f'C = 3000 PSI MIN.
C-90 HOLLOW/FLLED BLOCK f'm = 2000 PSI MIN.

SEALANTS:

GLAZING BEAD AT FRAME SILL SEALED TO GLASS WITH SILICONE
GLAZING OPTIONS 6A, 6B OR 6C.
FRAME CORNERS SEALED WITH DOW CORNING 999 OR EQUAL COMPATIBLE.

THIS PRODUCT MAY BE INSTALLED INSIDE OR OUTSIDE GLAZED

Trulite
GLASS & ALUMINUM SOLUTIONS™
http://www.trulite.com
800 FAIRWAY DRIVE, Suite 200
DEERFIELD BEACH, FL 33441
p. 800-432-8132 | f. 954-724-2083

PRODUCT:

Resistor 3000
STOREFRONT WALL-LMI

Resistor
BLAST & STORM PROTECTION™

REVN	DATE/REMARKS

ENGINEER:
MCY ENGINEERING, INC.
GLAZING CONSULTANT
9110 SW SUNSET DRIVE
MIAMI, FL 33173
P: 305-271-0117
Email: MCY.Engineering@att.net
www.MCYEngineering.com

STAMP:
YIPING WANG, P.E.
FLORIDA REGISTRATION
PE #55983
CA# 28677

YIPING WANG LICENSE No 55983 STATE OF FLORIDA PROFESSIONAL ENGINEER
NOV 15 2011

PRODUCT CONTROL APPROVAL:

PRODUCT REVISED
as complying with the Florida Building Code
Acceptance No 11-1117.03
Expiration Date March 18, 2014
By: [signature]
Miami Dade Product Control

DRAWN: S.L.	DRAWING No:
DATE: 9-22-11	9 OF 11
DWG: AD11-20	

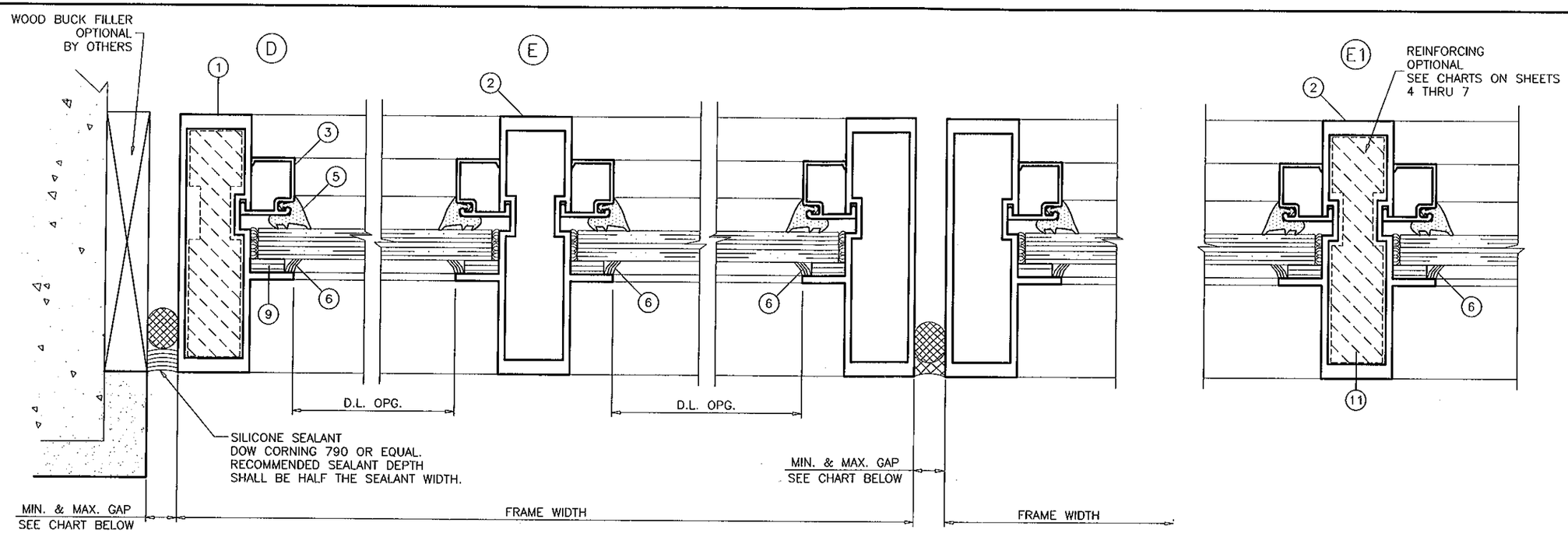

EXTERIOR OR INTERIOR

MAX. FRAME HEIGHT	GAP	
	MIN.	MAX.
60"	3/16"	1/2"
72"	1/4"	1/2"
84"	1/4"	1/2"
96"	3/8"	1/2"
108"	3/8"	1/2"
120"	1/2"	1/2"

MAX. FRAME WIDTH	MAX. GAP AT EACH SIDE
30 FT.	1-1/8"
60 FT.	1-1/8"

ALTERNATE SEALANTS AT JAMB GAPS CAN BE DESIGNED BY ENGINEER OF RECORD BASED ON MANUFACTURER GUIDE LINES.

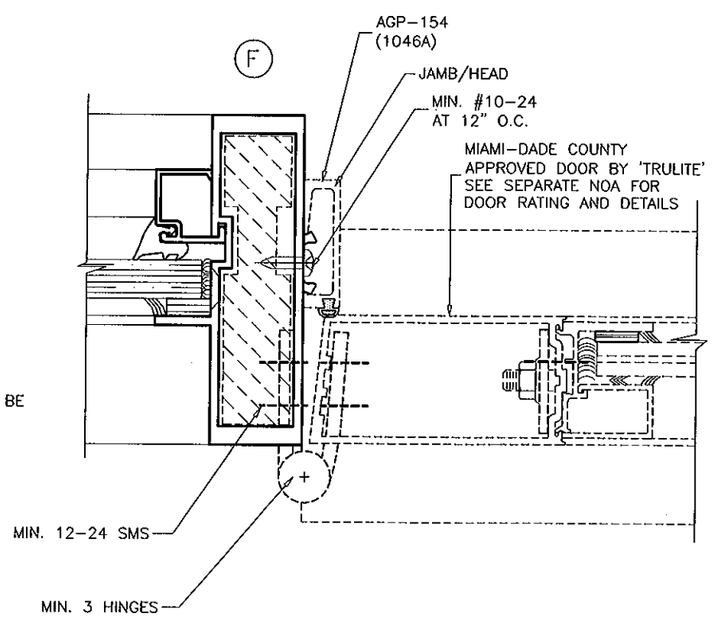

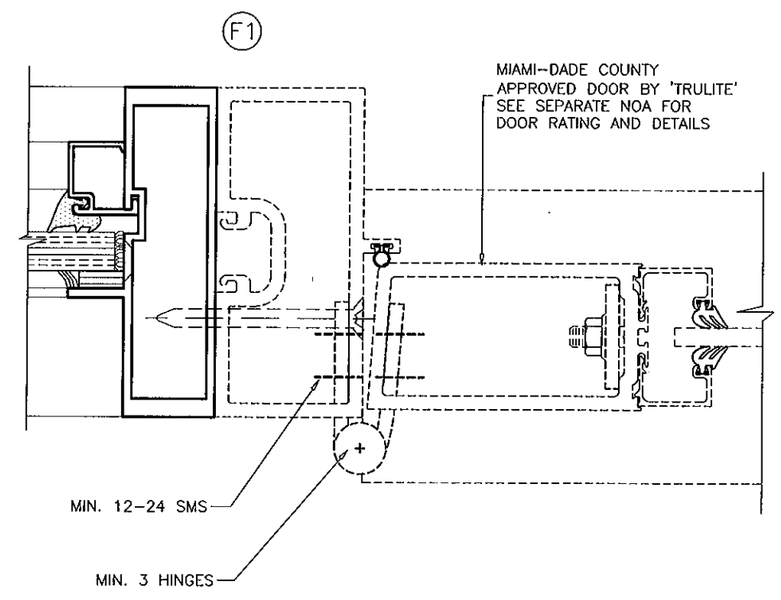

Trulite
GLASS & ALUMINUM SOLUTIONS™
http://www.trulite.com
800 FAIRWAY DRIVE, Suite 200
DEERFIELD BEACH, FL 33441
p. 800-432-8132 | f. 954-724-2083

PRODUCT:

Resistor 3000
STOREFRONT WALL-LMI

Resistor
BLAST & STORM PROTECTION™

REVN	DATE/REMARKS

ENGINEER:
MCY ENGINEERING, INC.
GLAZING CONSULTANT
9110 SW SUNSET DRIVE
MIAMI, FL 33173
P: 305-271-0117
Email: MCY.Engineering@att.net
www.MCYEngineering.com

STAMP:
YIPING WANG, P.E.
FLORIDA REGISTRATION
PE #55983
C.A.N. 28677

YIPING WANG
LICENSE
No 55983
NOV 15 2011
STATE OF
FLORIDA
PROFESSIONAL ENGINEER

PRODUCT CONTROL APPROVAL:

PRODUCT REVISED
as complying with the Florida
Building Code
Acceptance No 11-1117.03
Expiration Date MARCH 18, 2014
By Manuel Perez
Miami Dade Product Control

DRAWN: S.L.	DRAWING No:
DATE: 9-22-11	10 OF 11
DWG: AD11-20	

BILL OF MATERIALS

ITEM #	QTY.	PROFILE	DESCRIPTION	MATERIAL	MANUFACTURER/REMARKS
1	AS REQD.	3001	FRAME HEAD/SILL/JAMB	ALUM. 6063-T6	TRULITE
2	AS REQD.	3002	INTERMEDIATE MULLION (VERT/HORIZ)	ALUM. 6063-T6	TRULITE
3	AS REQD.	3003	GLAZING STOP	ALUM. 6063-T5	TRULITE
4	1/ CORNER	3004A	SHEAR BLOCK	ALUM. 6063-T6	1" LONG
5	AS REQD.	H-63	GLAZING GASKET	EPDM	–
6A	AS REQD.	DC995	SILICONE SEALANT	SILICONE	DOW CORNING
6B	AS REQD.	SSG4000	SILICONE SEALANT	SILICONE	GE (MOMENTIVE)
6C	AS REQD.	PROGLAZE SSG	SILICONE SEALANT	SILICONE	TREMCO
7	2/ CORNER	S14	#2-24 x 3/4" FLAT HEAD THREAD CUTTING SCREWS	–	–
8	2/ CORNER	P13	1/2-20 x 1-1/2" PAN HEAD MACHINE SCREWS	–	–
9	–	V2100	GLAZING FOAM TAPE	–	NORTON
9A	–	V2200	GLAZING FOAM TAPE	–	NORTON
10	AS REQD.	–	SETTING BLOCK (1/2" x 1/8" x 4" LONG)	EPDM	–
10A	AS REQD.	H62D	SETTING BLOCK (1/2" x 1/4" x 4" LONG)	EPDM	–
11	AS REQD.	3004A	ALUMINUM REINFORCEMENT	ALUM. 6063-T6	TRULITE

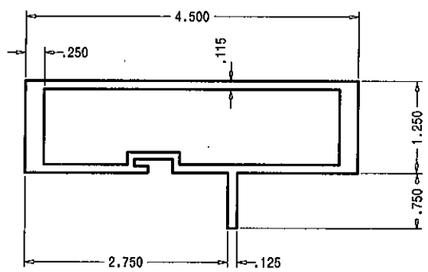

(1) FRAME HEAD/SILL/JAMB

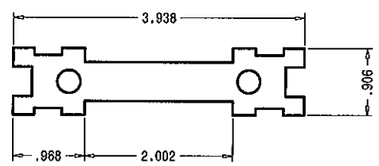

(4) SHEAR BLOCK

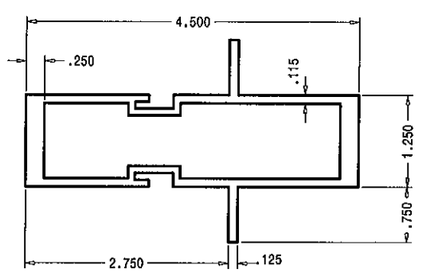

(2) FRAME INTERMEDIATE MULLION

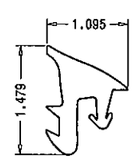

(5) WEDGE-IN GASKET

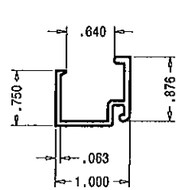

(3) GLAZING STOP (9/16" GLASS)

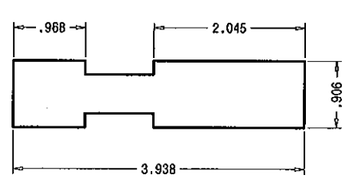

(11) REINFORCEMENT

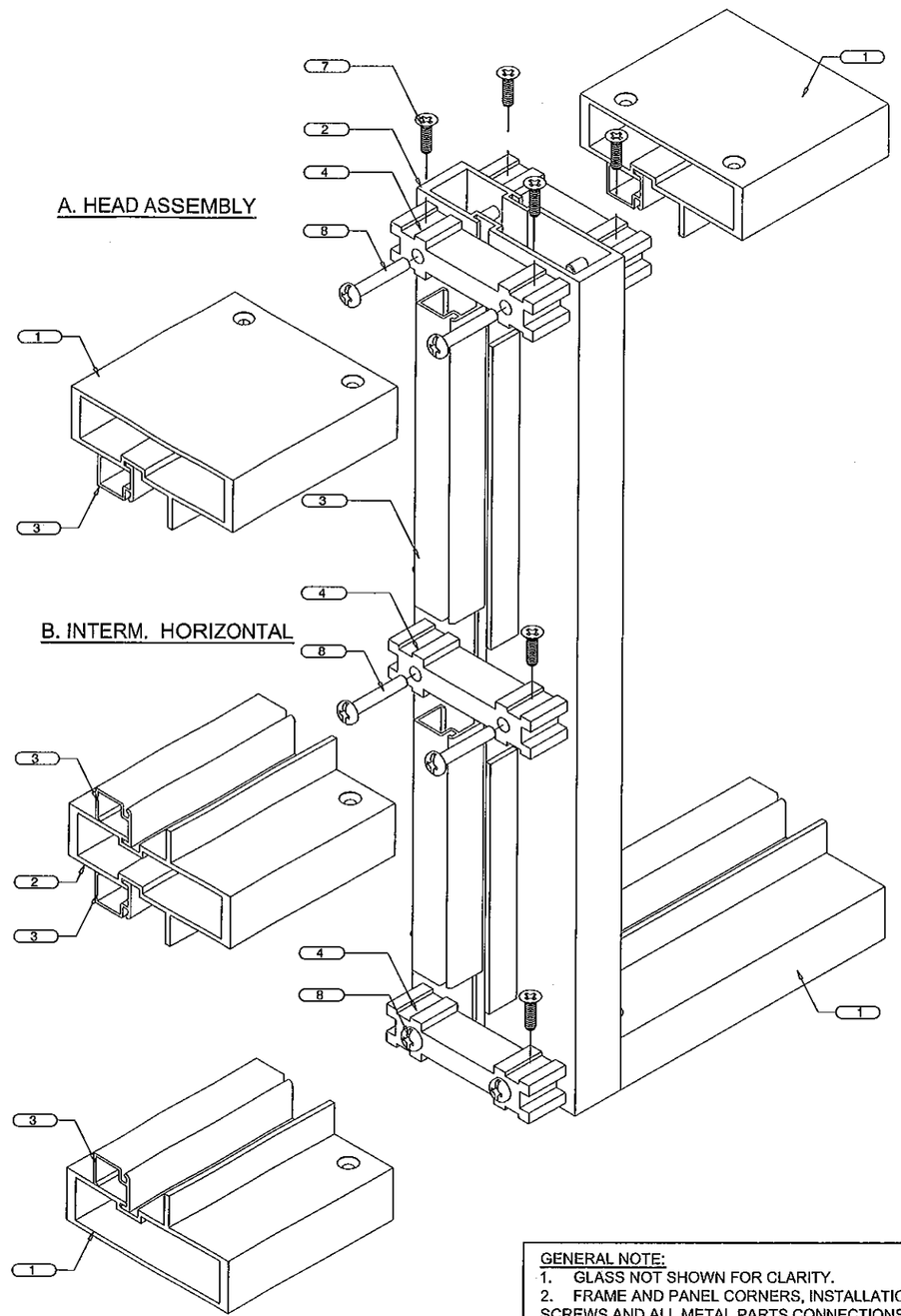

GENERAL NOTE:
1. GLASS NOT SHOWN FOR CLARITY.
2. FRAME AND PANEL CORNERS, INSTALLATION SCREWS AND ALL METAL PARTS CONNECTIONS TO BE SEALED WITH CLEAR COLORED SEALANT.

Trulite
GLASS & ALUMINUM SOLUTIONS™
http://www.trulite.com
800 FAIRWAY DRIVE, Suite 200
DEERFIELD BEACH, FL 33441
p. 800-432-8132 | f. 954-724-2083

PRODUCT:

Resistor 3000
STOREFRONT WALL-LMI

Resistor
BLAST & STORM PROTECTION™

REVN	DATE/REMARKS

ENGINEER:
MCY ENGINEERING, INC.
GLAZING CONSULTANT
9110 SW SUNSET DRIVE
MIAMI, FL 33173
P: 305-271-0117
Email: MCY.Engineering@att.net
www.MCYEngineering.com

STAMP:
YIPING WANG, P.E.
FLORIDA REGISTRATION
P.E. #55983
C.A.N. 28677

YIPING WANG
LICENSE
No 55983
STATE OF FLORIDA
NOV 15 2011
PROFESSIONAL ENGINEER

PRODUCT CONTROL APPROVAL:

PRODUCT REVISED
as complying with the Florida
Building Code
Acceptance No 11-1117.03
Expiration Date March 18, 2014
By
Miami Dade Product Control

DRAWN: S.L.	DRAWING No:
DATE: 9-22-11	11 OF 11
DWG: AD11-20	