MIAMI-DADE COUNTY
PRODUCT CONTROL SECTION
11805 SW 26 Street, Room 208
Miami, Florida 33175-2474
T (786) 315-2590 F (786) 315-2599
www.miamidade.gov/economy

DEPARTMENT OF REGULATORY AND ECONOMIC RESOURCES (RER)
BOARD AND CODE ADMINISTRATION DIVISION

NOTICE OF ACCEPTANCE (NOA)

PCI Industries Inc d/b/a Pottorff
5101 Blue Mound Road
Fort Worth, TX 76106

SCOPE:

This NOA is being issued under the applicable rules and regulations governing the use of construction materials. The documentation submitted has been reviewed and accepted by Miami-Dade County RER-Product Control Section to be used in Miami Dade County and other areas where allowed by the Authority Having Jurisdiction (AHJ).

This NOA shall not be valid after the expiration date stated below. The Miami-Dade County Product Control Section (In Miami Dade County) and/or the AHJ (in areas other than Miami Dade County) reserve the right to have this product or material tested for quality assurance purposes. If this product or material fails to perform in the accepted manner, the manufacturer will incur the expense of such testing and the AHJ may immediately revoke, modify, or suspend the use of such product or material within their jurisdiction. RER reserves the right to revoke this acceptance, if it is determined by Miami-Dade County Product Control Section that this product or material fails to meet the requirements of the applicable building code.

This product is approved as described herein, and has been designed to comply with the Florida Building Code, including the High Velocity Hurricane Zone.

DESCRIPTION: Model ECD-545-MD Aluminum Louver w/ or w/o CD-55 Damper

APPROVAL DOCUMENT: Drawing No. **DC-C1, G-1, E-1** to **E-7, D-1** to **D-6** and **B-1** and **B-2**, titled "ECD-545-MD", sheets 1 through 17 of 17, dated 12/07/2010, with revision 6 dated 06/14/2011, prepared by the manufacturer, signed and sealed by L. David Rice, P.E., bearing the Miami-Dade County Product Control revision stamp with the Notice of Acceptance number and expiration date by the Miami-Dade County Product Control Section.

MISSILE IMPACT RATING: Large and Small Missile Impact Resistant

LABELING: Each unit shall bear a permanent label with the manufacturer's name or logo, city, state, model/series, and following statement: "Miami-Dade County Product Control Approved", unless otherwise noted herein.

RENEWAL of this NOA shall be considered after a renewal application has been filed and there has been no change in the applicable building code negatively affecting the performance of this product.

TERMINATION of this NOA will occur after the expiration date or if there has been a revision or change in the materials, use, and/or manufacture of the product or process. Misuse of this NOA as an endorsement of any product, for sales, advertising or any other purposes shall automatically terminate this NOA. Failure to comply with any section of this NOA shall be cause for termination and removal of NOA.

ADVERTISEMENT: The NOA number preceded by the words Miami-Dade County, Florida, and followed by the expiration date may be displayed in advertising literature. If any portion of the NOA is displayed, then it shall be done in its entirety.

INSPECTION: A copy of this entire NOA shall be provided to the user by the manufacturer or its distributors and shall be available for inspection at the job site at the request of the Building Official.

This NOA **revises and renews NOA # 11-0429.04** and consists of this page 1 and evidence page E-1, as well as approval document mentioned above.

The submitted documentation was reviewed by **Carlos M. Utrera, P.E.**

MIAMI-DADE COUNTY APPROVED

12/17/2013

NOA No. 11-1117.22
Expiration Date: October 23, 2018
Approval Date: December 26, 2013

NOTICE OF ACCEPTANCE: EVIDENCE SUBMITTED

A. DRAWINGS ***"Submitted under NOA # 11-0429.04"***

1. Drawing No. **DC-C1, G-1, E-1** to **E-7, D-1** to **D-6** and **B-1** and **B-2**, titled "ECD-545-MD", sheets 1 through 17 of 17, dated 12/07/2010, with revision 6 dated 06/14/11, prepared by the manufacturer, signed and sealed by L. David Rice, P.E.

B. TESTS ***"Submitted under NOA # 11-0429.04"***

1. Test reports on: 1) Uniform Static Air Pressure Test, Loading per FBC, TAS 202-94
   2) Large Missile Impact Test per FBC, TAS 201-94
   3) Cyclic Wind Pressure Loading per FBC, TAS 203-94

   along with installation diagram of a Model ECD-545-MD Aluminum Louver, prepared by Architectural Testing, Inc, Test Report No. **A1620.01-801-18**, dated 10/18/2010, signed and sealed by Joseph A. Reed, P.E.

"Submitted under NOA # 09-1015.08"

2. Test report on Wind Driven Rain Resistance per FBC TAS 100(A)-95 (modified by Checklist # 0240) along with marked-up drawings and installation diagram of Model ECD-545-MD Fixed Aluminum Louver with a CD-55 Damper, prepared by Architectural Testing, Inc, Test Report No. **92027.01-109-18**, dated 09/09/2009, with Revision 1 dated 01/11/2010, signed and sealed by Michael D. Stremmel, P.E.

"Submitted under NOA # 08-0528.04"

3. Test reports on 1) Uniform Static Air Pressure Test, Loading per FBC TAS 202-94
   2) Large Missile Impact Test per FBC, TAS 201-94
   3) Cyclic Wind Pressure Loading per FBC, TAS 203-94

   along with marked-up drawings and installation diagram of Model ECD-545-MD Aluminum Louver, prepared by Hurricane Test Laboratory, LLC, Test Report No. **HTL-0399-0116-07**, dated 02/27/2008, signed and sealed by Vinu J. Abraham, P.E.

C. CALCULATIONS ***"Submitted under NOA # 11-0429.04"***

1. ECD-545-MD Louver calculations prepared by Rice Engineering, dated 04/21/2011, signed and sealed by L. David Rice, P.E.

D. QUALITY ASSURANCE

1. Miami-Dade Department of Regulatory and Economic Resources (RER)

E. MATERIAL CERTIFICATIONS

1. None.

F. STATEMENTS

1. Statement letter of code conformance to 2010 FBC, issued by Rice Engineering, dated 11/13/2013, signed and sealed by L. David Rice, P.E.
2. No financial interest letter issued by Rice Engineering, dated 03/30/2011, signed and sealed by L. David Rice, P.E.

12/17/2013

Carlos M. Utrera, P.E.
Product Control Examiner
NOA No. 11-1117.22
Expiration Date: October 23, 2018
Approval Date: December 26, 2013

NOTES:

1. THIS NOA DRAWING INCLUDES INSTALLATION DETAILS TO ATTAIN MAXIMUM DESIGN PRESSURES OF 80 AND 150 PSF AS TESTED IN ACCORDANCE TO TAS 201, TAS 202, AND TAS 203. THE INSTALLATION OF A CD-55 DAMPER OPTION YIELDS WATER INGRESS PROTECTION AS TESTED IN ACCORDANCE WITH TAS 100(A).
2. ALL VARIATIONS ARE LARGE MISSILE IMPACT RESISTANT.
3. UNITS OF MEASURE ARE FRACTIONAL INCHES UNLESS OTHERWISE SPECIFIED.
4. IT IS ASSUMED THAT THE LOUVER SYSTEMS DO NOT SUPPORT ANY LOADS TRANSFERRED FROM THE BUILDING CONDITION.
5. IT IS ASSUMED THAT THE BUILDING CONDITIONS ARE ADEQUATELY DESIGNED TO SUPPORT LOADS IMPARTED BY THE LOUVER SYSTEM.
6. INSTALLER TO PROVIDE GASKET MATERIAL BETWEEN DISSIMILAR MATERIALS IN ORDER TO PROTECT FROM CORROSION.
7. WATER PENETRATION:
   a. LOUVERS WITHOUT THE CD-55 DAMPER OPTION ARE TO BE INSTALLED IN A LOCATION WHERE THE ROOM BEHIND THE LOUVER IS DESIGNED TO DRAIN WATER PENETRATING INTO THE ROOM, AND THE ROOM WILL HOUSE WATER RESISTANT/WATER PROOF EQUIPMENT, COMPONENTS, OR SUPPLIES.
   b. CRITICAL EQUIPMENT DOES NOT NEED TO BE PROTECTED FROM MOISTURE INGRESS WHEN LOUVERS ARE UTILIZED WITH THE CD-55 DAMPER OPTION AND THE DAMPERS ARE CLOSED.
8. OTHER BUILDING CONDITIONS THAN THOSE DENOTED CAN BE UTILIZED IF ANALYZED AND APPROVED BY A PROFESSIONAL ENGINEER.
9. MULTI-SECTION WIDE AND HIGH LOUVER SYSTEMS ARE ALLOWABLE PROVIDED THE INDIVIDUAL SECTIONS ARE SUPPORTED PER THE DETAILS ON THIS DRAWING AND A SUITABLE SUPPORT STRUCTURE IS ANALYZED AND APPROVED BY A PROFESSIONAL ENGINEER.

TABLE 1

SINGLE SECTION SIZE LIMITATIONS

MAX DESIGN PRESSURE	MIN (W X H)	MAX (W X H)
80 PSF	12 X 12	60 X 102
150 PSF	12 X 12	48 X 144

TABLE 2

MULTIPLE SECTION SIZE LIMITATIONS
(MAX DESIGN PRESSURE: 80 & 150 PSF)

LOUVER SYSTEM CONFIGURATION:	NOTE:
SINGLE SECTION WIDE - UNLIMITED HEIGHT	SEE SHEET E2
SINGLE SECTION HIGH - UNLIMITED WIDTH	SEE SHEETS E3 & E4
MULTI-SECTION WIDE - MULTI-SECTION HIGH	SEE NOTE 9

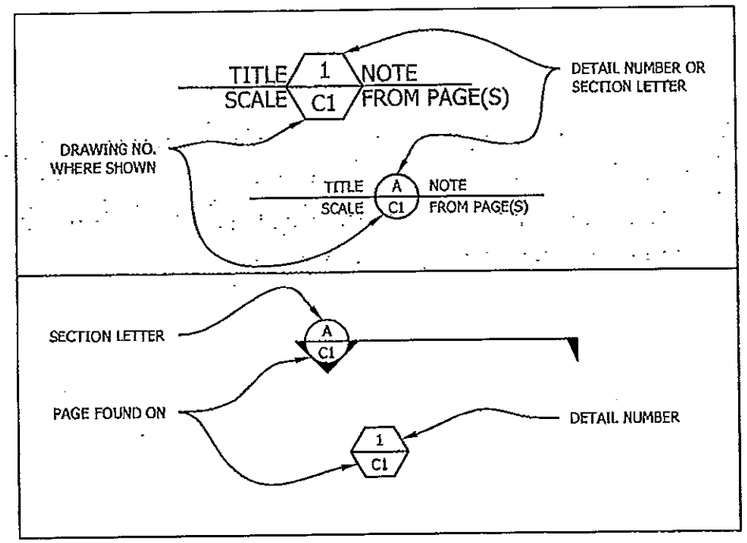

RICE ENGINEERING
105 School Creek Trail
Luxemburg, WI 54217
Phone 920.845 1042
Fax 920.845 1046
www.rice-inc.com

Florida Firm No. F-01000005061
Certificate of Authorization: #9090
L. David Rice
Registration No: 50923

L. DAVID RICE LICENSE No. 50923 STATE OF FLORIDA PROFESSIONAL ENGINEER

JUN 27 2011

PRODUCT REVISED
as complying with the Florida Building Code
Acceptance No 11-1117.22
Expiration Date 10/23/2018
By
Miami Dade Product Control

PRODUCT REVISED
as complying with the Florida Building Code
Acceptance No 11-0422.04
Expiration Date 10/23/2013
By
Miami Dade Product Control

FILE:

REV. NO.	DESCRIPTION	DATE	DRAWN BY
6.	MADE CHG'S PER 6/8/11 LETTER	6/14/11	NW
5	ADDED 150 PSF OPTION	12/07/10	TB
4	FASTENER SPACING PER MIAMI DADE	01/21/10	TB
3	UPDATED WITH CD-55 DAMPER OPTION	09/01/09	DNG
2	CHANGED 48" O.C. TO 34" O.C.	07/29/08	DNG
1	CHANGED 60" O.C. TO 48" O.C.	01/09/08	DNG

This drawing and the design represented are the confidential and proprietary property of Pottorff and may not be disclosed, loaned, copied or used for any purpose other than design review and approval without the express written consent of Pottorff.

POTTORFF®
5101 Blue Mound Road
Fort Worth, Texas 76106
Phone: 817-831-7038
Fax: 817-831-3110

DRAWING DESC.: COVER PAGE
PROJECT: ECD-545-MD
LOCATION:
ARCHITECT:
CUSTOMER:

DATE: 12/07/2010	DWN BY: TB	POTTORFF ORDER NO.	CUSTOMER P.O. NO.	DRAWING NO.
SCALE: NTS	SHEET: 01 of 17			DC-CI

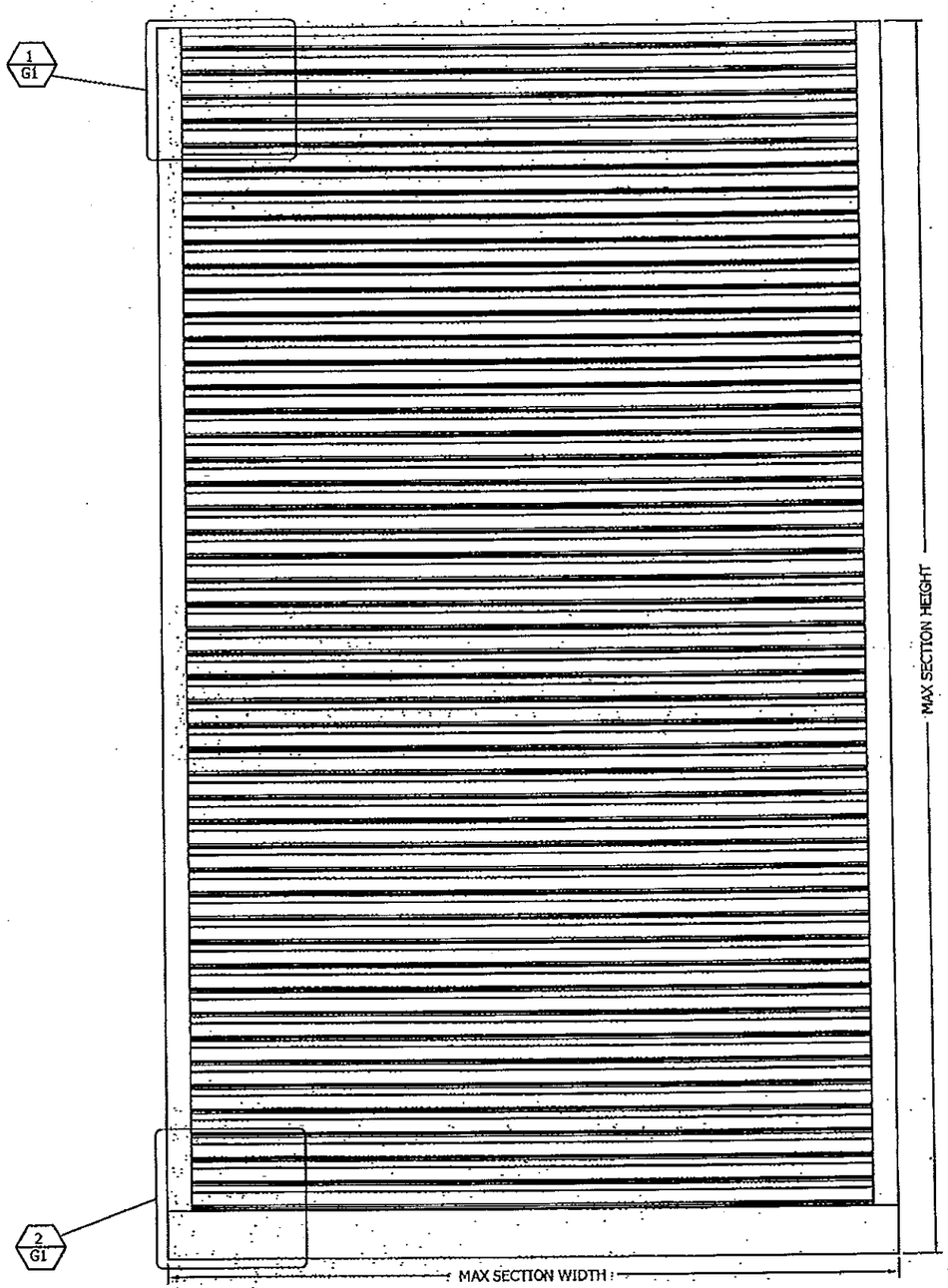

INTERIOR ELEVATION

PRODUCT REVISED
as complying with the Florida
Building Code
Acceptance No 11-1117.22
Expiration Date 10/23/2018
By
Miami Dade Product Control

PRODUCT REVISED
as complying with the Florida
Building Code
Acceptance No 11-0429.04
Expiration Date 10/23/2013
By
Miami Dade Product Control

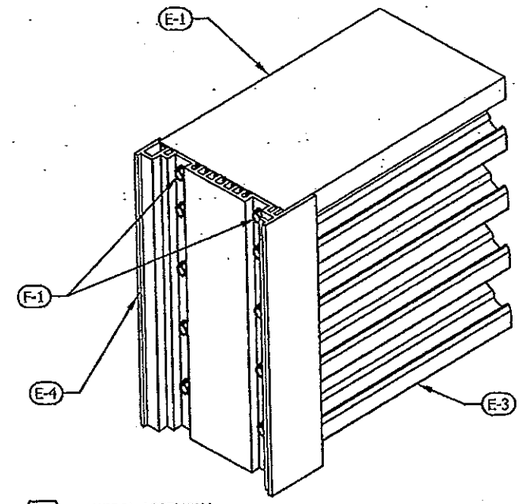

TOP CORNER 1/G1 GENERAL ASSEMBLY G1
3" = 1' 0"

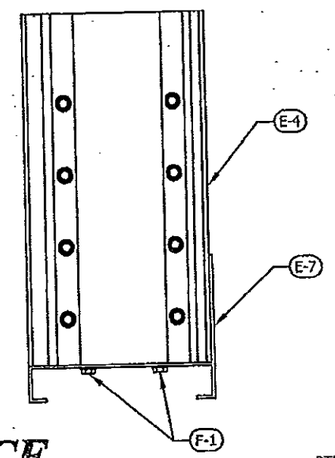

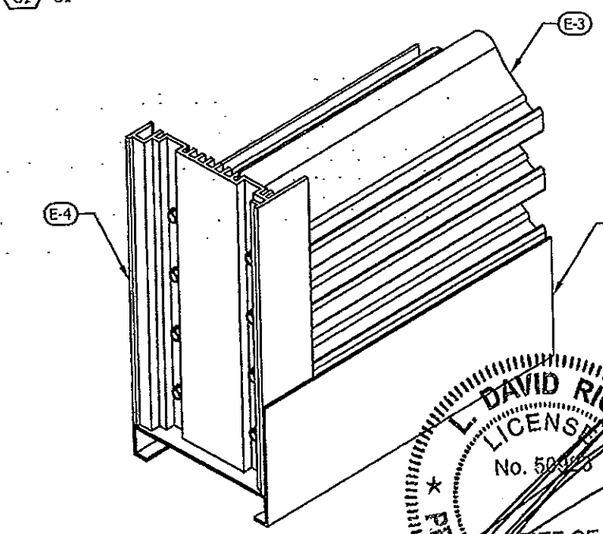

BTM CORNER 2/G1 GENERAL ASSEMBLY G1
3" = 1' 0"

L. DAVID RICE
LICENSE
No. 50923
STATE OF FLORIDA
PROFESSIONAL ENGINEER

RICE ENGINEERING
105 School Creek Trail
Luxemburg, WI 54217
Phone 920.845 1042
Fax 920.845 1048
www.rico-inc.com

Florida Firm No. F-01000005061
Certificate of Authorization: #9090
L. David Rice
Registration No: 50923

POTTORFF®
5101 Blue Mound Road
Fort Worth, Texas 76106
Phone: 817-831-7038
Fax: 817-831-3110

JUN 27 2011

FILE:			
6	MADE CHG'S PER 6/8/11 LETTER	6/14/11	NW
5	ADDED 150 PSF OPTION	12/07/10	TB
4	FASTENER SPACING PER MIAMI DADE	01/21/10	TB
3	UPDATED WITH CD-55 DAMPER OPTION	09/01/09	DNG
2	CHANGED 48" O.C. TO 34" O.C.	07/29/08	DNG
1	CHANGED 60" O.C. TO 48" O.C.	01/09/08	DNG
REV. NO.	DESCRIPTION	DATE	DRAWN BY

This drawing and the design represented are the confidential and proprietary property of Pottorff and may not be disclosed, loaned, copied or used for any purpose other than design review and approval without the express written consent of Pottorff.

DRAWING DESC.: GENERAL LOUVER ASSEMBLY				
PROJECT: ECD-545-MD				
LOCATION:				
ARCHITECT:				
CUSTOMER:				
DATE: 12/07/2010	DWN BY: TB	POTTORFF ORDER NO.	CUSTOMER P.O. NO.	DRAWING NO.
SCALE: NTS	SHEET: 02 of 17			DC-GI

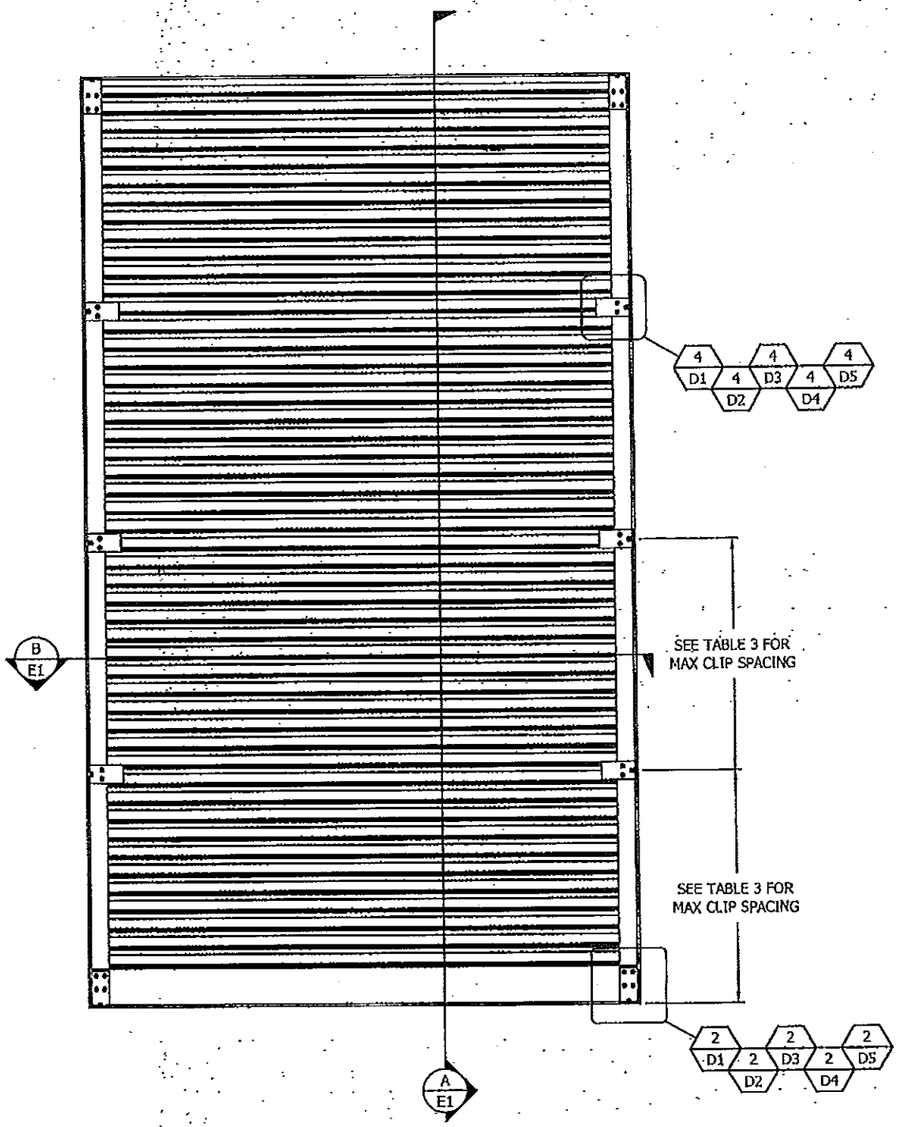

INTERIOR ELEVATION
(MASONRY CONDITION SHOWN FOR REFERENCE ONLY)

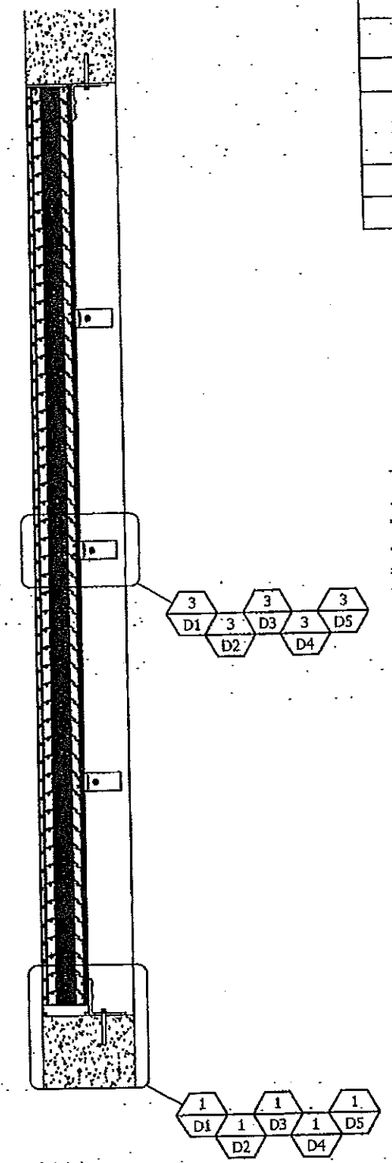

SINGLE SECTION HIGH (A/E1) (80 & 150 PSF RATED) E1, E3, E4
3/4" = 1' 0"

TABLE 3				
VERTICAL JAMB CLIP ANGLE SPACING				
	BUILDING CONDITION - MAXIMUM CLIP ANGLE SPACING (IN.)			
MAX DESIGN PRESSURE	STEEL	4000 PSI CONCRETE (PRE-CAST OR CAST IN PLACE)	2000 PSI GROUT FILLED BEAM BLOCK	WOOD BLOCK
80 PSF	34.0	34.0	20.4	-
150 PSF	20.0	20.0	20.0	20.0

PRODUCT REVISED
as complying with the Florida
Building Code
Acceptance No 11-1117.22
Expiration Date 10/23/2018
By
Miami Dade Product Control

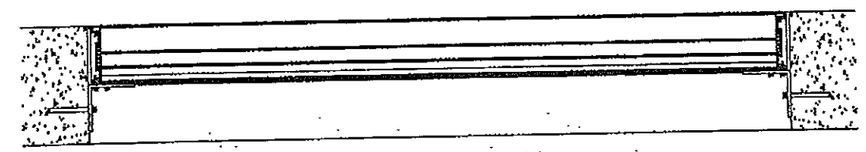

SINGLE SECTION WIDE (B/E1) (80 & 150 PSF RATED) E1, E2
3/4" = 1' 0"

RICE ENGINEERING
105 School Creek Trail
Luxemburg, WI 54217
Phone 920.845 1042
Fax 920.845 1048
www.rice-inc.com

Florida Firm No: F-01000005061
Certificate of Authorization: #9090
L. David Rice
Registration No: 50923

PRODUCT REVISED
as complying with the Florida
Building Code
Acceptance No 11-0429.09
Expiration Date 10/23/2013
By
Miami Dade Product Control

L. DAVID RICE
LICENSE
No. 50923
STATE OF
FLORIDA
PROFESSIONAL ENGINEER

JUN 27 2011

POTTORFF®
5101 Blue Mound Road
Fort Worth, Texas 76106
Phone: 817-831-7038
Fax: 817-831-3110

DRAWING DESC.: SINGLE SECTION WIDE - SINGLE SECTION HIGH (80 & 150 PSF)
PROJECT: ECD-545-MD
LOCATION:
ARCHITECT:
CUSTOMER:

DATE: 12/07/2010	DWN BY: TB	POTTORFF ORDER NO.	CUSTOMER P.O. NO.	DRAWING NO.
SCALE: 3/4" = 1' 0"	SHEET: 03 of 17			DC-EI

FILE:

REV. NO.	DESCRIPTION	DATE	DRAWN BY
6	MADE CHG'S PER 6/8/11 LETTER	6/14/11	NW
5	ADDED 150 PSF OPTION	12/07/10	TB
4	FASTENER SPACING PER MIAMI DADE	01/21/10	TB
3	UPDATED WITH CD-55 DAMPER OPTION	09/01/09	DNG
2	CHANGED 48" O.C. TO 34" O.C.	07/29/08	DNG
1	CHANGED 60" O.C. TO 48" O.C.	01/09/08	DNG

This drawing and the design represented are the confidential and proprietary property of Pottorff and may not be disclosed, loaned, copied or used for any purpose other than design review and approval without the express written consent of Pottorff.

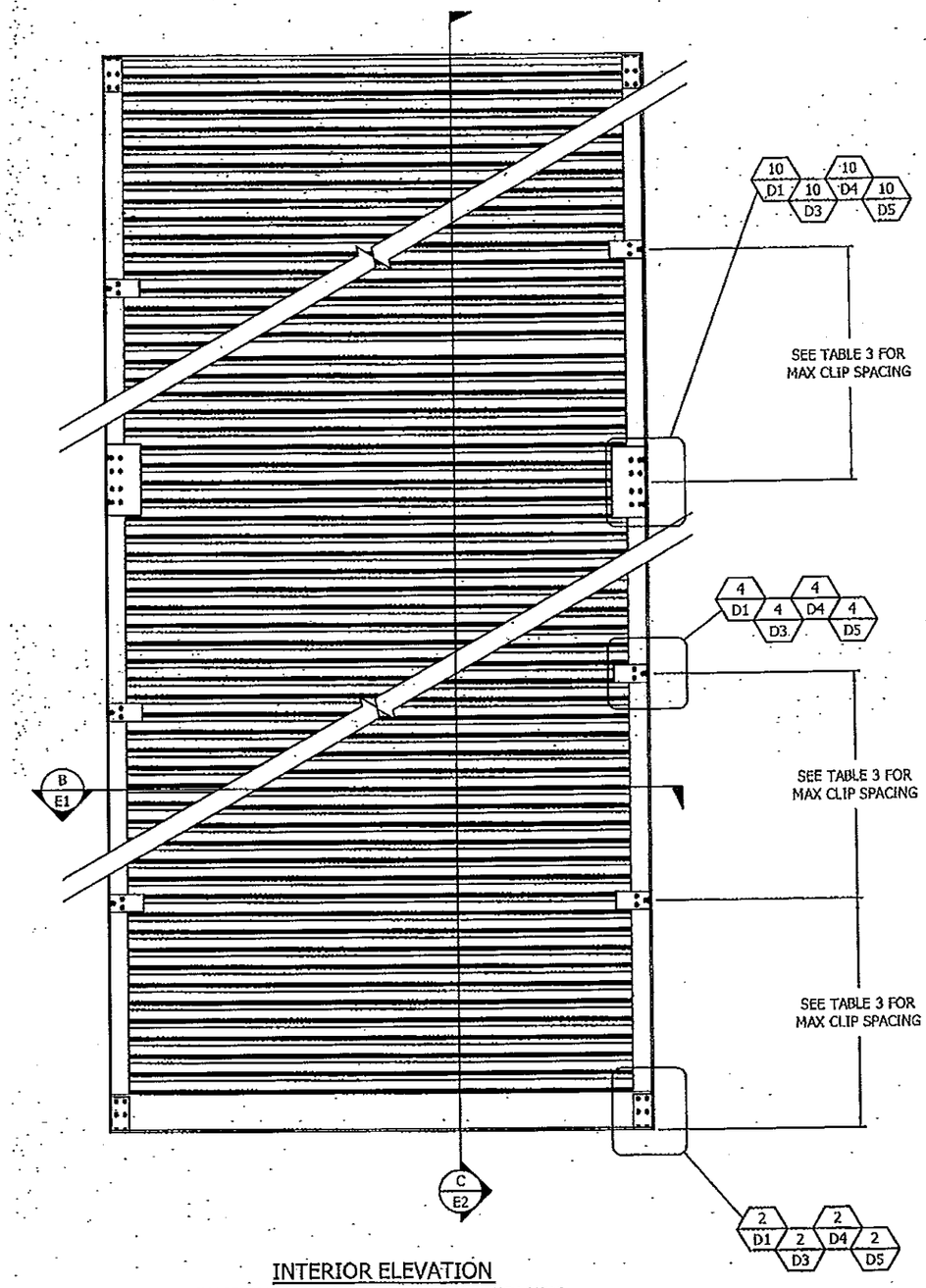

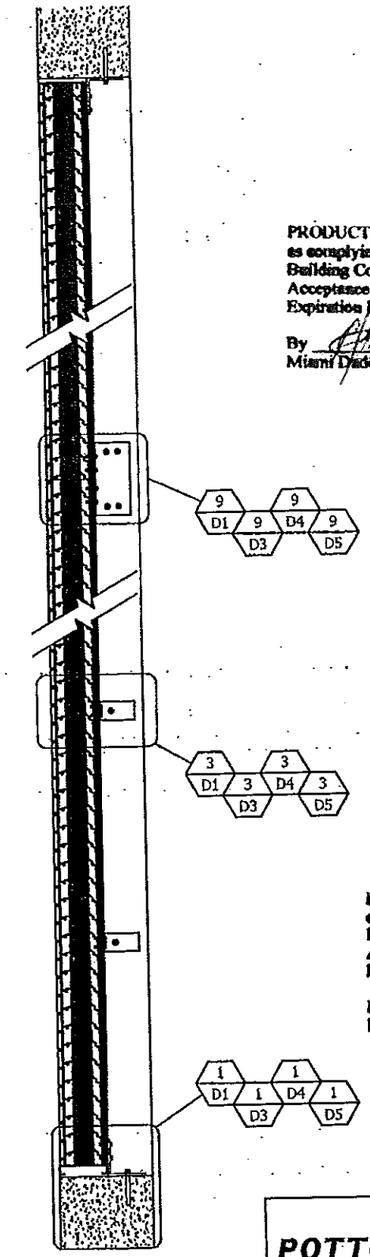

PRODUCT REVISED
as complying with the Florida
Building Code
Acceptance No 11-1117.02
Expiration Date 10/23/2018
By
Miami Dade Product Control

RICE
ENGINEERING
105 School Creek Trail
Luxemburg, WI 54217
Phone 920.845 1042
Fax 920.845 1048
www.rice-inc.com

Florida Firm No: F-01000005061
Certificate of Authorization: #9090
L. David Rice
Registration No: 50923

PRODUCT REVISED
as complying with the Florida
Building Code
Acceptance No 11-0929.04
Expiration Date 10/23/2013
By
Miami Dade Product Control

L. DAVID RICE
LICENSE
No. 50923
STATE OF
FLORIDA
PROFESSIONAL ENGINEER

JUN 27 2011

INTERIOR ELEVATION

(MASONRY CONDITION SHOWN FOR REFERENCE ONLY)

UNLIMITED SECTIONS HIGH (C / E2) (150 PSF ONLY) E2

3/4" = 1' 0"

FILE:

REV. NO.	DESCRIPTION	DATE	DRAWN BY
6	MADE CHG'S PER 6/8/11 LETTER	6/14/11	NW
5	ADDED 150 PSF OPTION	12/07/10	TB
4	FASTENER SPACING PER MIAMI DADE	01/21/10	TB
3	UPDATED WITH CD-55 DAMPER OPTION	09/01/09	DNG
2	CHANGED 48" O.C. TO 34" O.C.	07/29/08	DNG
1	CHANGED 60" O.C. TO 48" O.C.	01/09/08	DNG

This drawing and the design represented are the confidential and proprietary property of Pottorff and may not be disclosed, loaned, copied or used for any purpose other than design review and approval without the express written consent of Pottorff.

POTTORFF®

5101 Blue Mound Road
Fort Worth, Texas 76106
Phone: 817-831-7038
Fax: 817-831-3110

DRAWING DESC.: SINGLE SECTION WIDE - UNLIMITED HIGH (150 PSF)
PROJECT: ECD-545-MD
LOCATION:
ARCHITECT:
CUSTOMER:

DATE: 12/07/2010	DWN BY: TB	POTTORFF ORDER NO.	CUSTOMER P.O. NO.	DRAWING NO.
SCALE: NTS	SHEET: 04 of 17			DC-E2

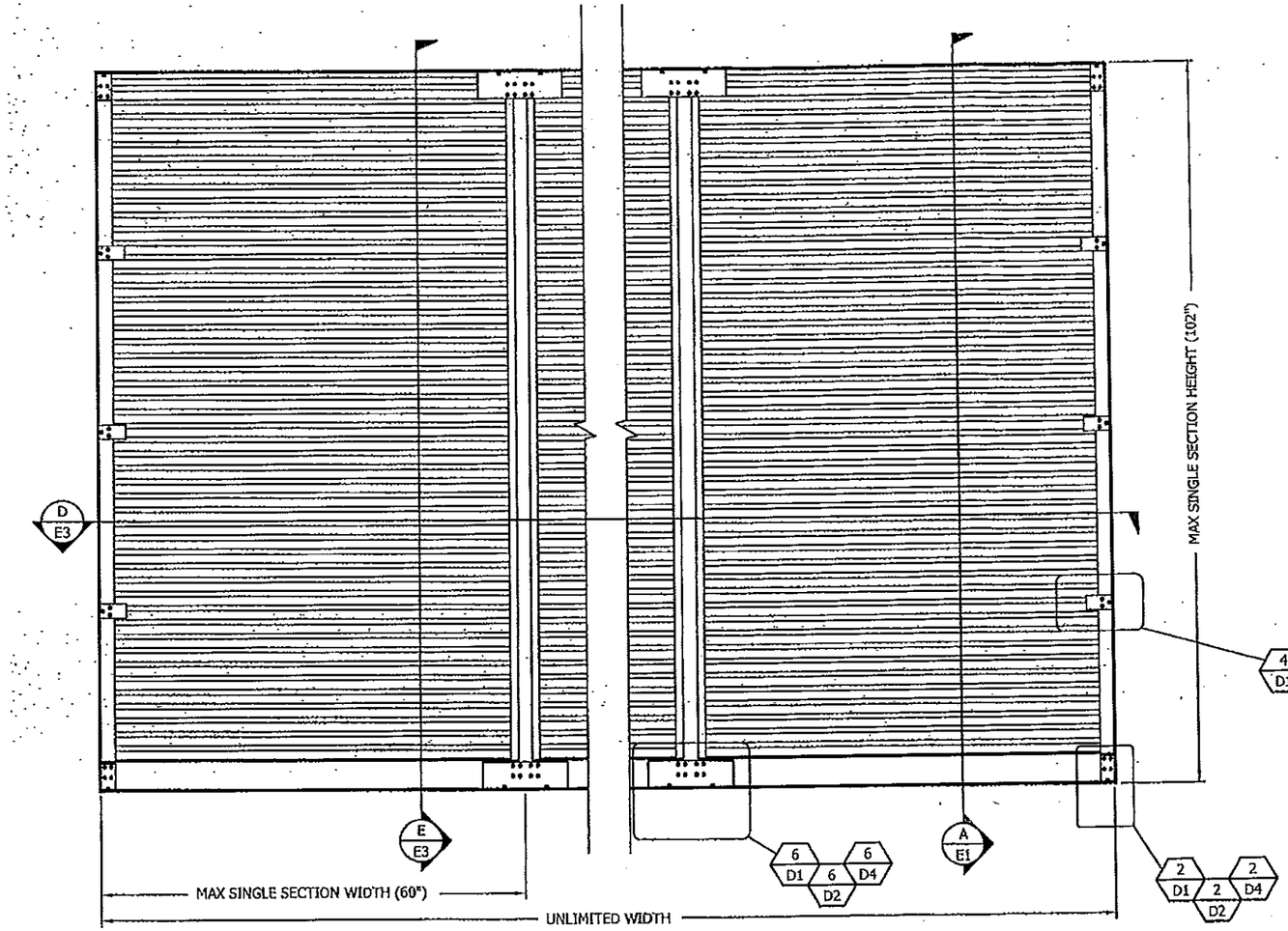

80 PSF INTERIOR ELEVATION
(MASONRY CONDITION SHOWN FOR REFERENCE ONLY)

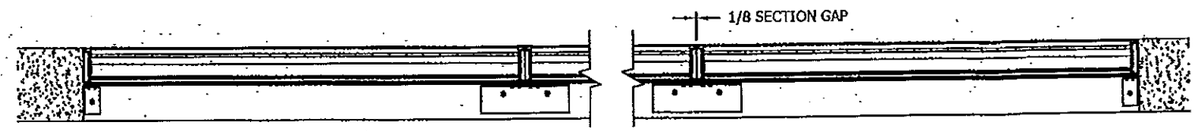

UNLIMITED SECTIONS WIDE (D / E3) (80 PSF RATED) E3
3/4" = 1' 0"

PRODUCT REVISED
as complying with the Florida
Building Code
Acceptance No 11-1117.22
Expiration Date 10/23/2018
By
Miami Dade Product Control

RICE
ENGINEERING
105 School Creek Trail
Luxemburg, WI 54217
Phone 920.845 1042
Fax 920.845 1048
www.rice-inc.com

Florida Firm No. F-01000005061
Certificate of Authorization: #9090
L. David Rice
Registration No: 50923

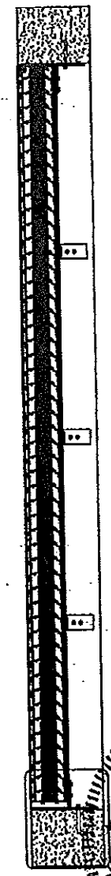

PRODUCT REVISED
as complying with the Florida
Building Code
Acceptance No 11-0429.04
Expiration Date 10/23/2013
By
Miami Dade Product Control

L. DAVID RICE
LICENSED
No. 50923
STATE OF FLORIDA
PROFESSIONAL ENGINEER

UNLIMITED SECTIONS WIDE (E / E3) (80 PSF RATED) E3
3/4" = 1' 0"

JUN 27 2011

FILE:			
6	MADE CHG'S PER 6/8/11 LETTER	6/14/11	NW
5	ADDED 150 PSF OPTION	12/07/10	TB
4	FASTENER SPACING PER MIAMI DADE	01/21/10	TB
3	UPDATED WITH CD-55 DAMPER OPTION	09/01/09	DNG
2	CHANGED 48" O.C. TO 34" O.C.	07/29/08	DNG
1	CHANGED 60" O.C. TO 48" O.C.	01/09/08	DNG
REV. NO.	DESCRIPTION	DATE	DRAWN BY

This drawing and the design represented are the confidential and proprietary property of Pottorff and may not be disclosed, loaned, copied or used for any purpose other than design review and approval without the express written consent of Pottorff.

POTTORFF®
5101 Blue Mound Road
Fort Worth, Texas 76106
Phone: 817-831-7038
Fax: 817-831-3110

DRAWING DESC.: SINGLE SECTION HIGH - UNLIMITED WIDTH (80 PSF RATED)
PROJECT: ECD-545-MD
LOCATION:
ARCHITECT:
CUSTOMER:

DATE: 12/07/2010	DWN BY: TB	POTTORFF ORDER NO.	CUSTOMER P.O. NO.	DRAWING NO.
SCALE: NTS	SHEET: 05 of 17			DC-E3

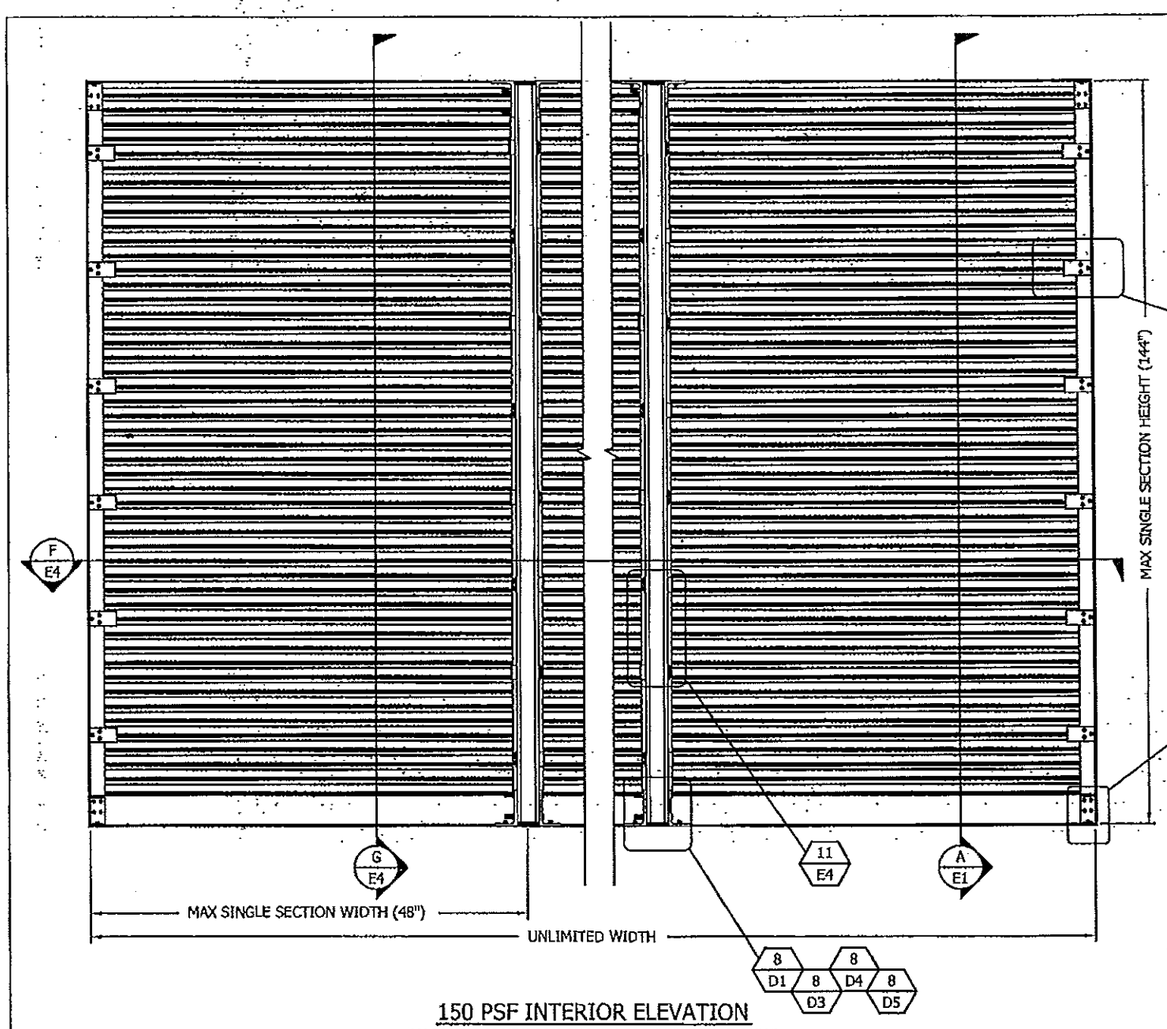

150 PSF INTERIOR ELEVATION
(MASONRY CONDITION SHOWN FOR REFERENCE ONLY)

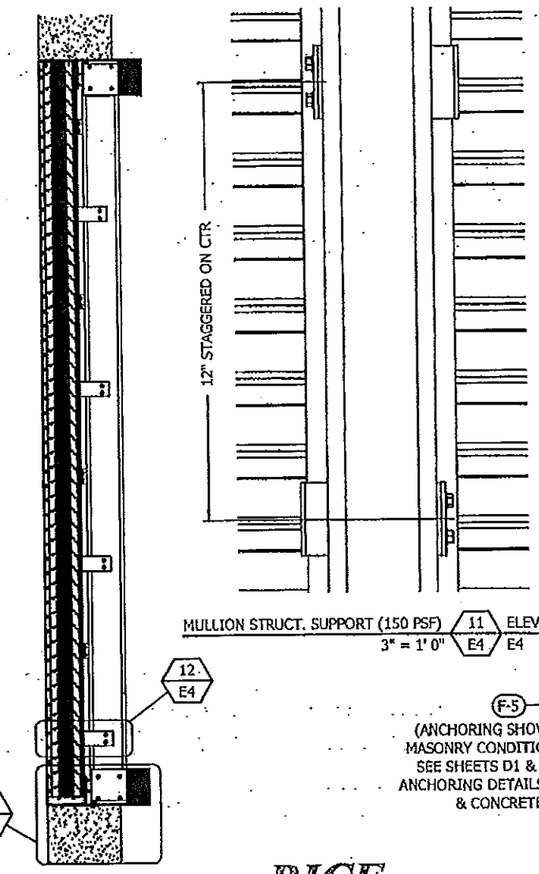

MULTI SECT WIDE (150 PSF) G E4 VERTICAL SECTION E4
3/4" = 1' 0"

MULLION STRUCT. SUPPORT (150 PSF) 11 E4 ELEV DTL. E4
3" = 1' 0"

PRODUCT REVISED
as complying with the Florida Building Code
Acceptance No 11-0429.04
Expiration Date 10/23/2013
By
Miami Dade Product Control

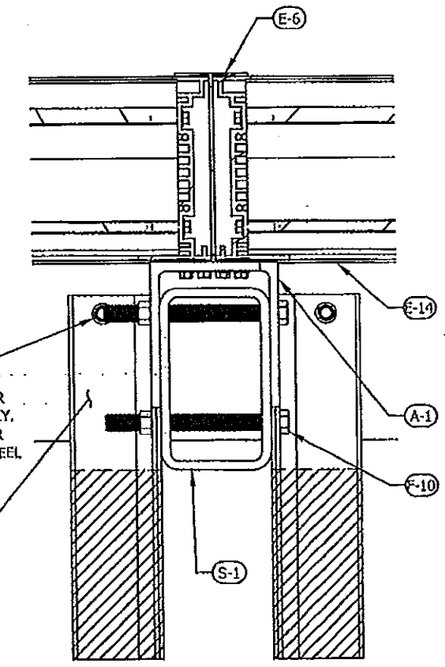

(ANCHORING SHOWN FOR MASONRY CONDITION ONLY. SEE SHEETS D1 & D5 FOR ANCHORING DETAILS IN STEEL & CONCRETE.)

RICE ENGINEERING
105 School Creek Trail
Luxemburg, WI 54217
Phone 920.845 1042
Fax 920.845 1048
www.rice-inc.com
Florida Firm No: F-01000005061
Certificate of Authorization: #9090
L. David Rice
Registration No: 50923

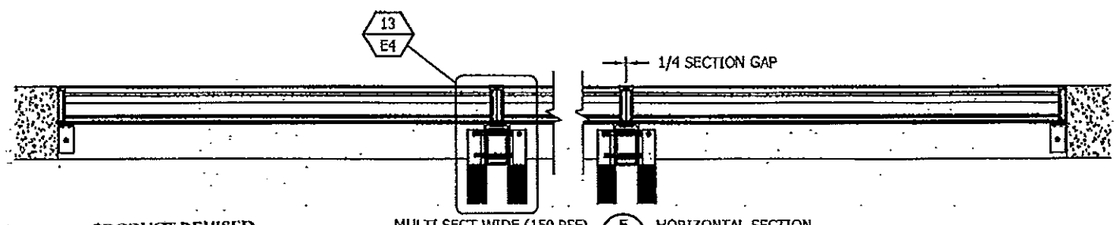

MULTI SECT WIDE (150 PSF) F E4 HORIZONTAL SECTION E4
3/4" = 1' 0"

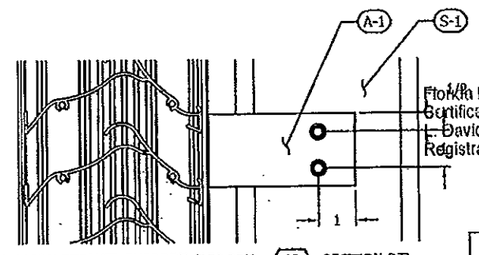

MULLION STRUCT. SUPPORT (150 PSF) 12 E4 SECTION DTL E4
3" = 1' 0"

MULLION STRUCT. SUPPORT (150 PSF) 13 E4 SECTION DTL
3" = 1' 0"

L. DAVID RICE
LICENSED
No. 50923
STATE OF FLORIDA
PROFESSIONAL ENGINEER

PRODUCT REVISED
as complying with the Florida Building Code
Acceptance No 11-1117.22
Expiration Date 10/23/2018
By
Miami Dade Product Control

NOTE: UNITS REQUIRE AN EXPANDED ALUMINUM SCREEN WITH SCREEN FRAME (E-14) INSTALLED BEHIND THE BLADES.

FILE:

REV. NO.	DESCRIPTION	DATE	DRAWN BY
6	MADE CHG'S PER 6/8/11 LETTER	6/14/11	NW
5	ADDED 150 PSF OPTION	12/07/10	TB
4	FASTENER SPACING PER MIAMI DADE	01/21/10	TB
3	UPDATED WITH CD-55 DAMPER OPTION	09/01/09	DNG
2	CHANGED 48" O.C. TO 34" O.C.	07/29/08	DNG
1	CHANGED 60" O.C. TO 48" O.C.	01/09/08	DNG

This drawing and the design represented are the confidential and proprietary property of Pottorff and may not be disclosed, loaned, copied or used for any purpose other than design review and approval without the express written consent of Pottorff.

POTTORFF®

JUN 27 2011

DRAWING DESC.: SINGLE SECTION HIGH - UNLIMITED WIDE (150 PSF RATED)
PROJECT: ECD-545-MD
LOCATION:
ARCHITECT:
CUSTOMER:

DATE: 12/07/2010	DWN BY: TB	POTTORFF ORDER NO.	CUSTOMER P.O. NO.	DRAWING NO.
SCALE: NTS	SHEET: 06 of 17			DC-E4

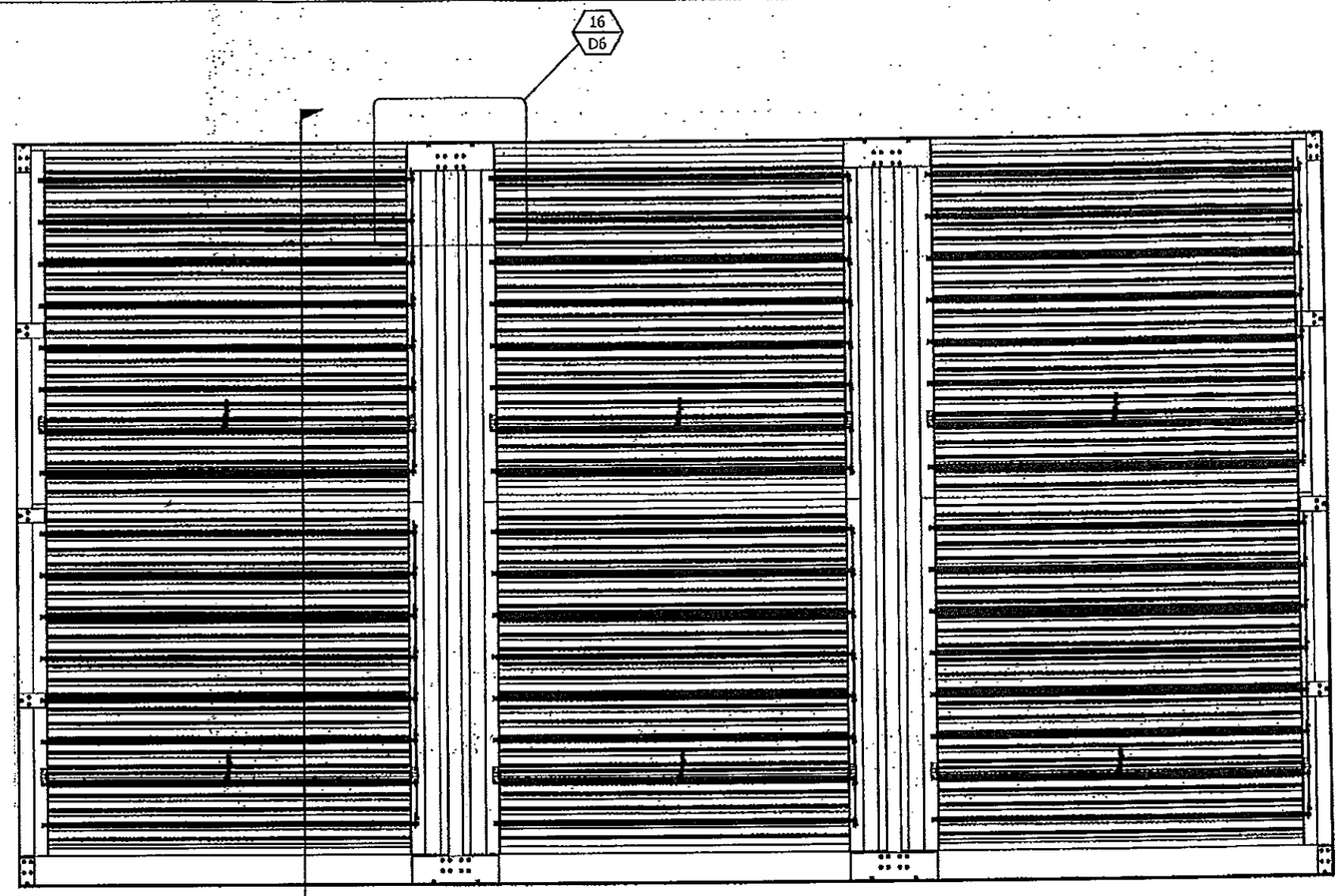

INTERIOR ELEVATION
(MASONRY CONDITION SHOWN FOR REFERENCE ONLY)

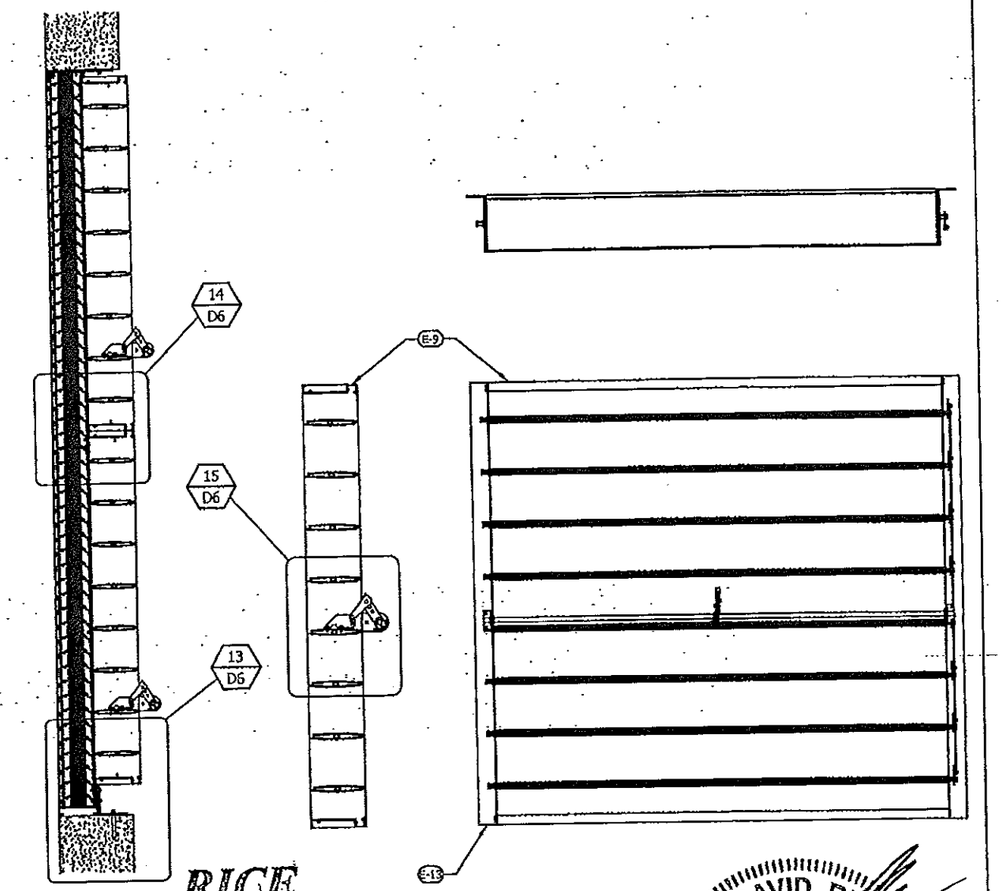

CD-55 DAMPER 3/4" = 1' 0" (H / E5) VERTICAL SECTION E5

RICE ENGINEERING
105 School Creek Trail
Luxemburg, WI 54217
Phone 920.845 1042
Fax 920.845 1048
www.rice-inc.com

Florida Firm No: F-01000005061
Certificate of Authorization: #9090
L. David Rice
Registration No: 50929

L. DAVID RICE LICENSE No. 50929 STATE OF FLORIDA PROFESSIONAL ENGINEER

NOTES:
1. SEE PAGES E1 - E4 FOR LOUVER ATTACHMENT INFORMATION

PRODUCT REVISED
as complying with the Florida Building Code
Acceptance No 11-1117.22
Expiration Date 10/23/2018
By
Miami Dade Product Control

PRODUCT REVISED
as complying with the Florida Building Code
Acceptance No 11-0429.04
Expiration Date 10/23/2013
By
Miami Dade Product Control

POTTORFF®
5101 Blue Mound Road
Fort Worth, Texas 76106
Phone: 817-831-7038
Fax: 817-831-3110

JUN 27 2011

DRAWING DESC.:	CD-55 DAMPER ATTACHMENT
PROJECT:	ECD-545-MD
LOCATION:	
ARCHITECT:	
CUSTOMER:	

DATE: 12/07/2010	DWN BY: TB	POTTORFF ORDER NO.	CUSTOMER P.O. NO.	DRAWING NO.
SCALE: NTS	SHEET: 07 of 17			DC-E5

FILE:

REV. NO.	DESCRIPTION	DATE	DRAWN BY
6	MADE CHG'S PER 6/8/11 LETTER	6/14/11	NW
5	ADDED 150 PSF OPTION	12/07/10	TB
4	FASTENER SPACING PER MIAMI DADE	01/21/10	TB
3	UPDATED WITH CD-55 DAMPER OPTION	09/01/09	DNG
2	CHANGED 48" O.C. TO 34" O.C.	07/29/08	DNG
1	CHANGED 60" O.C. TO 48" O.C.	01/09/08	DNG

This drawing and the design represented are the confidential and proprietary property of Pottorff and may not be disclosed, loaned, copied or used for any purpose other than design review and approval without the express written consent of Pottorff.

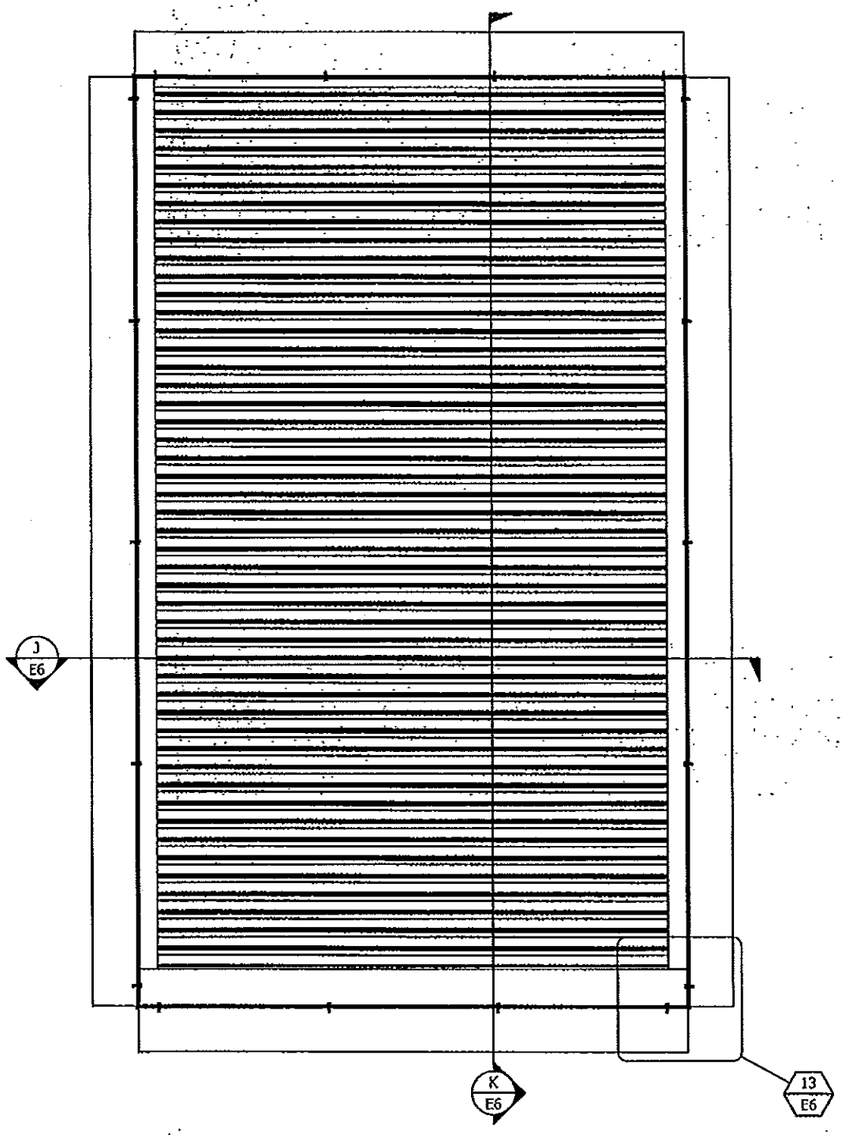

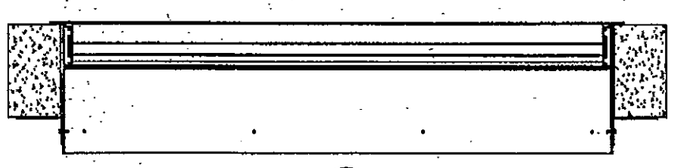

SLEEVE ATTACHMENT (J / E6) 150 PSF ONLY
3/4" = 1' 0" E6

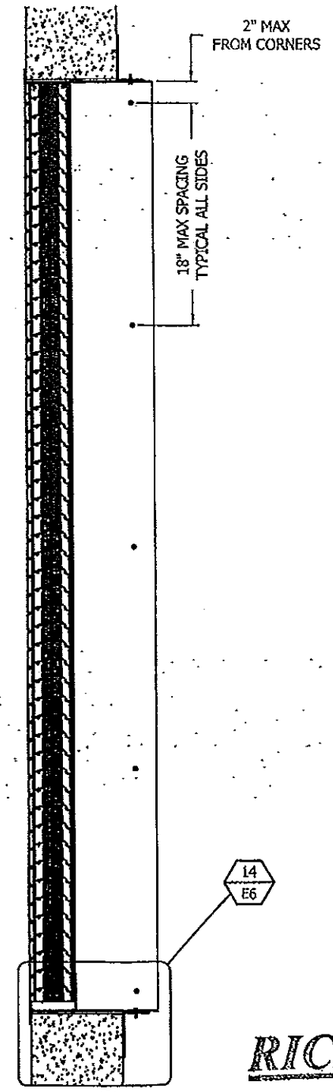

SLEEVE ATTACHMENT (K / E6) 150 PSF ONLY
3/4" = 1' 0" E6

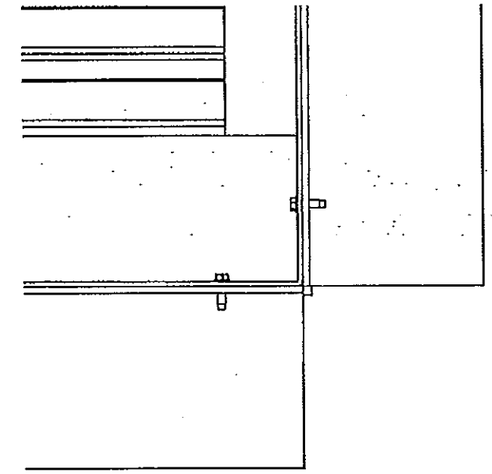

SLEEVE ELEV DTL (13 / E6) SLEEVE ATTACHMENT DTL
3" = 1' 0" E6

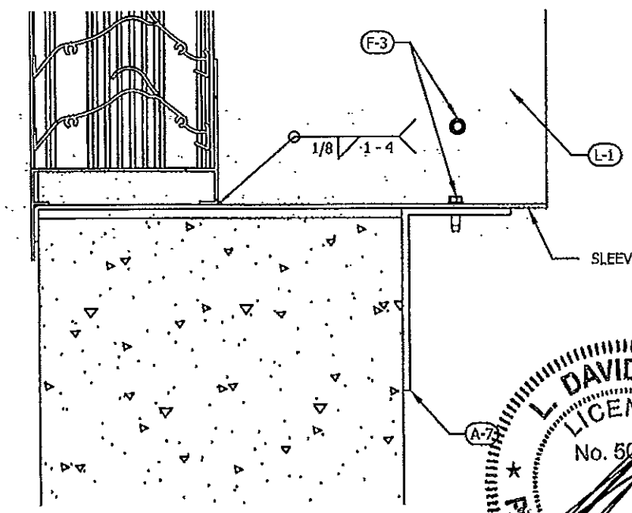

SLEEVE SECTION DTL (14 / E6) SLEEVE ATTACHMENT DTL
3" = 1' 0" E6

PRODUCT REVISED
as complying with the Florida Building Code
Acceptance No 11-1117.22
Expiration Date 10/23/2018
By
Miami Dade Product Control

PRODUCT REVISED
as complying with the Florida Building Code
Acceptance No 11-0929.04
Expiration Date 10/23/2013
By
Miami Dade Product Control

L. DAVID RICE
LICENSE
No. 50923
STATE OF FLORIDA
PROFESSIONAL ENGINEER

JUN 27 2011

RICE ENGINEERING
105 School Creek Trail
Luxemburg, WI 54217
Phone 920.845 1042
Fax 920.845 1040
www.rice-inc.com

Florida Firm No: F-01000005061
Certificate of Authorization: #9090
L. David Rice
Registration No: 50923

NOTES:
1) SLEEVED OPTION AVAILABLE ON SINGLE SECTION LOUVER ONLY
2) NO MECHANICAL FASTENING TO BUILDING CONDITION REQUIRED FOR SLEEVE

POTTORFF®
5101 Blue Mound Road
Fort Worth, Texas 76106
Phone: 817-831-7038
Fax: 817-831-3110

DRAWING DESC.: SLEEVED LOUVER DETAILS (150 PSF ONLY)			
PROJECT: ECD-545-MD			
LOCATION:			
ARCHITECT:			
CUSTOMER:			
DATE: 12/07/2010	DWN BY: TB	POTTORFF ORDER NO.	CUSTOMER P.O. NO.	DRAWING NO.
SCALE: NTS	SHEET: 08 of 17			DC-E6

FILE:

REV. NO.	DESCRIPTION	DATE	DRAWN BY
6	MADE CHG'S PER 6/8/11 LETTER	6/14/11	NW
5	ADDED 150 PSF OPTION	12/07/10	TB
4	FASTENER SPACING PER MIAMI DADE	01/21/10	TB
3	UPDATED WITH CD-55 DAMPER OPTION	09/01/09	DNG
2	CHANGED 48" O.C. TO 34" O.C.	07/29/08	DNG
1	CHANGED 60" O.C. TO 48" O.C.	01/09/08	DNG

This drawing and the design represented are the confidential and proprietary property of Pottorff and may not be disclosed, loaned, copied or used for any purpose other than design review and approval without the express written consent of Pottorff.

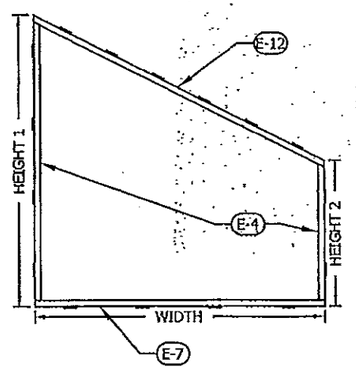

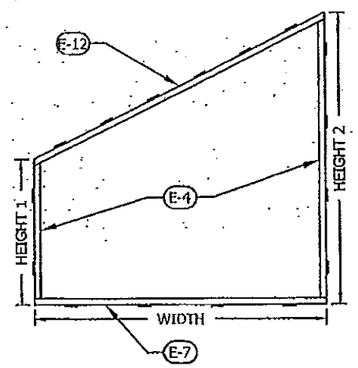

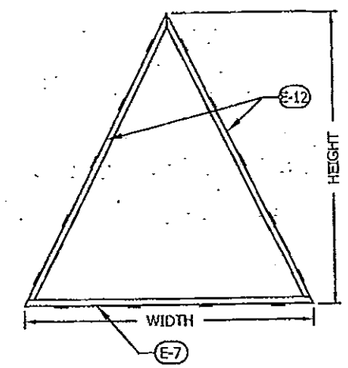

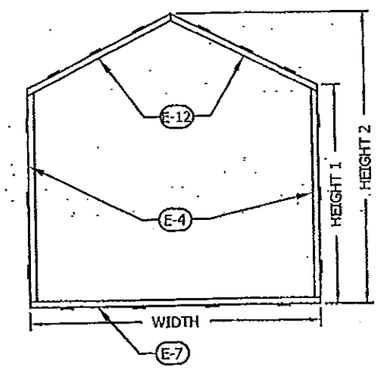

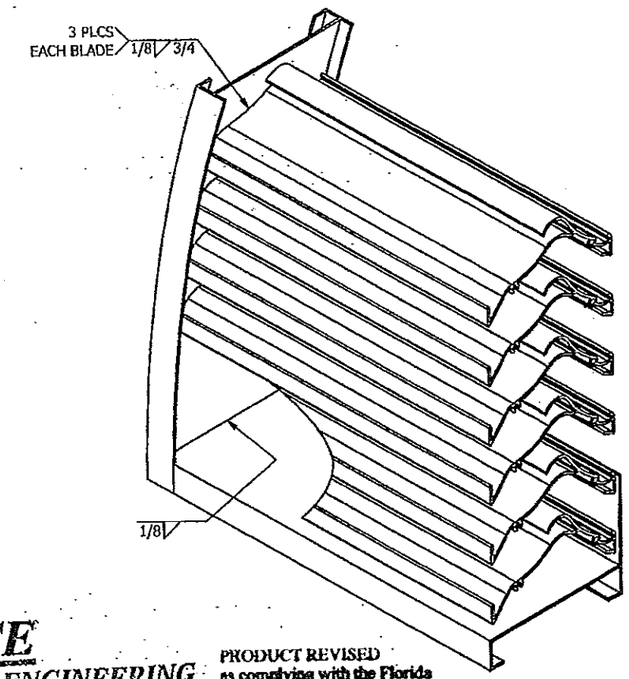

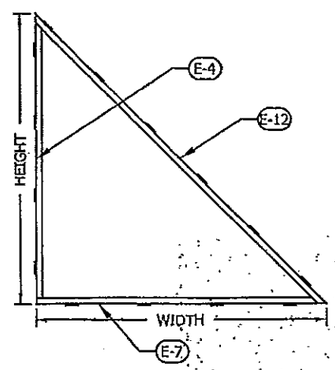

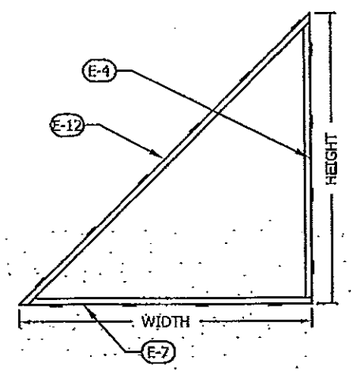

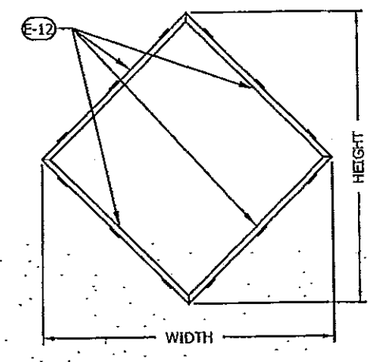

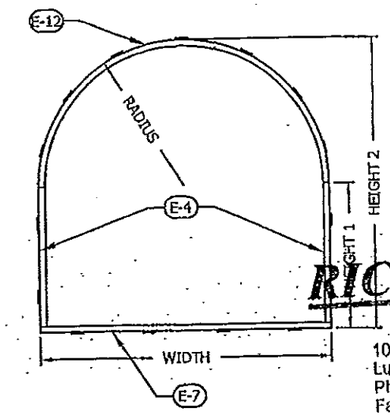

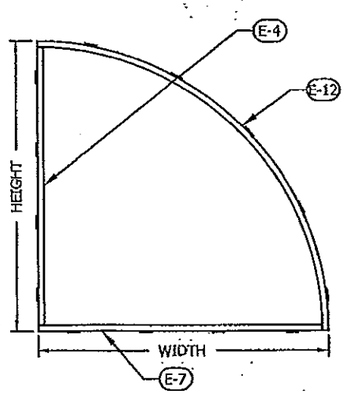

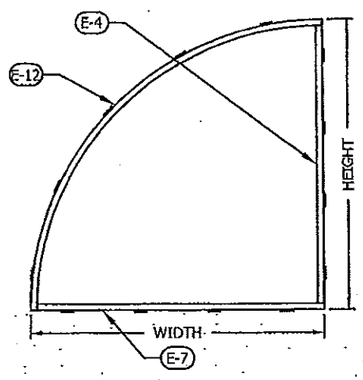

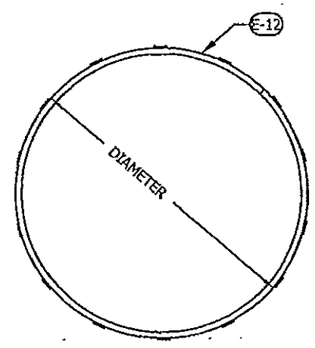

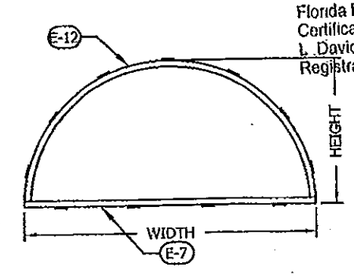

RICE ENGINEERING
105 School Creek Trail
Luxemburg, WI 54217
Phone 920.845 1042
Fax 920.845 1048
www.rice-inc.com

PRODUCT REVISED
as complying with the Florida Building Code
Acceptance No 11-1117.02
Expiration Date 10/23/2018
By
Miami Dade Product Control

Florida Firm No. F-01000005061
Certificate of Authorization: #9090
L. David Rice
Registration No: 50923

PRODUCT REVISED
as complying with the Florida Building Code
Acceptance No 11-0429.04
Expiration Date 10/23/2013
By
Miami Dade Product Control

L. DAVID RICE
LICENSE
No. 50923
STATE OF FLORIDA
PROFESSIONAL ENGINEER

JUN 27 2011

NOTE:
1) SHAPED LOUVER DIMENSIONS WILL NOT EXCEED MAX SINGLE SECTION SIZES
2) SEE TABLE 3, PAGE E1, FOR MAX CLIP SPACING

FILE:

REV. NO.	DESCRIPTION	DATE	DRAWN BY
6	MADE CHG'S PER 6/8/11 LETTER	6/14/11	NW
5	ADDED 150 PSF OPTION	12/07/10	TB
4	FASTENER SPACING PER MIAMI DADE	01/21/10	TB
3	UPDATED WITH CD-55 DAMPER OPTION	09/01/09	DNG
2	CHANGED 48" O.C. TO 34" O.C.	07/29/08	DNG
1	CHANGED 60" O.C. TO 48" O.C.	01/09/08	DNG

This drawing and the design represented are the confidential and proprietary property of Pottorff and may not be disclosed, loaned, copied or used for any purpose other than design review and approval without the express written consent of Pottorff.

POTTORFF®
5101 Blue Mound Road
Fort Worth, Texas 76106
Phone: 817-831-7038
Fax: 817-831-3110

DRAWING DESC.: SHAPED LOUVER DETAILS
PROJECT: ECD-545-MD
LOCATION:
ARCHITECT:
CUSTOMER:

DATE: 12/07/2010	DWN BY: TB	POTTORFF ORDER NO.	CUSTOMER P.O. NO.	DRAWING NO.
SCALE: NTS	SHEET: 09 of 17			DC-E7

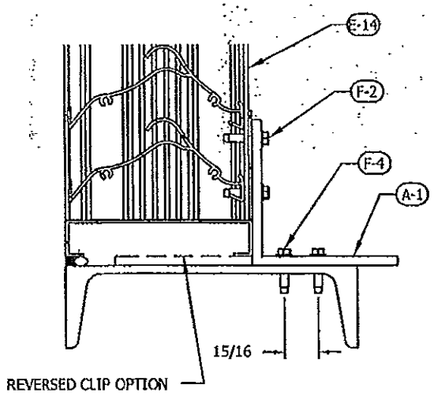

TOP & BTM SECT DTL 1/D1 STEEL CONDITION
3" = 1' 0" E1, E2

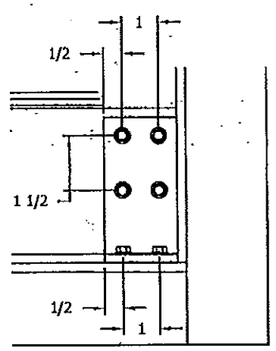

TOP & BTM ELEV DTL 2/D1 STEEL CONDITION
3" = 1' 0" E1, E2, E3, E4

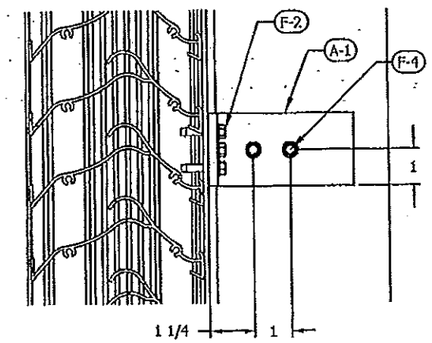

JAMB SECT DTL 3/D1 STEEL CONDITION
3" = 1' 0" E1, E2

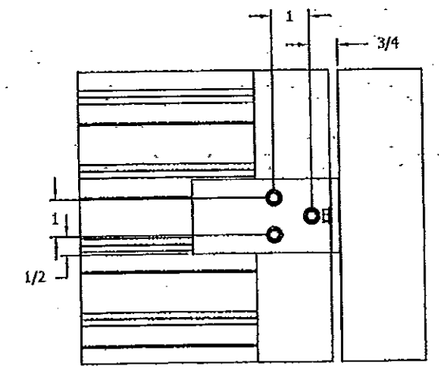

JAMB ELEV DTL 4/D1 STEEL CONDITION
3" = 1' 0" E1, E2, E3, E4

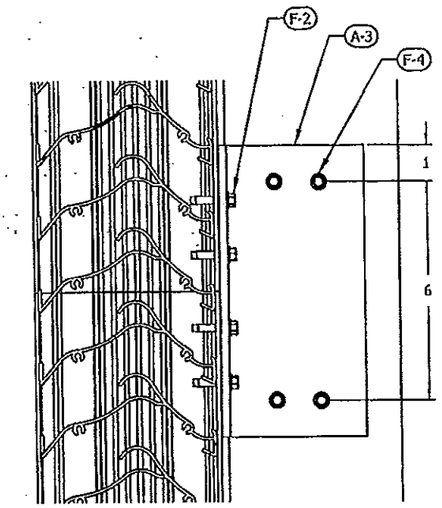

SPLICE SECT DTL (150 PSF) 9/D1 STEEL CONDITION
3" = 1' 0" E2

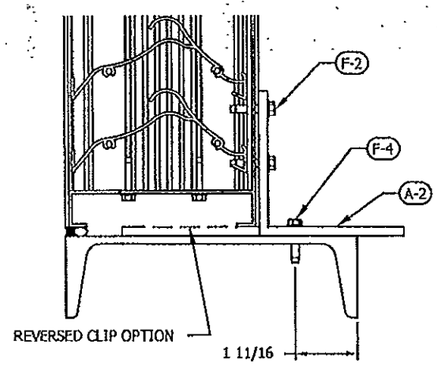

MULLION SECT DTL (80 PSF) 5/D1 STEEL CONDITION
3" = 1' 0" E3

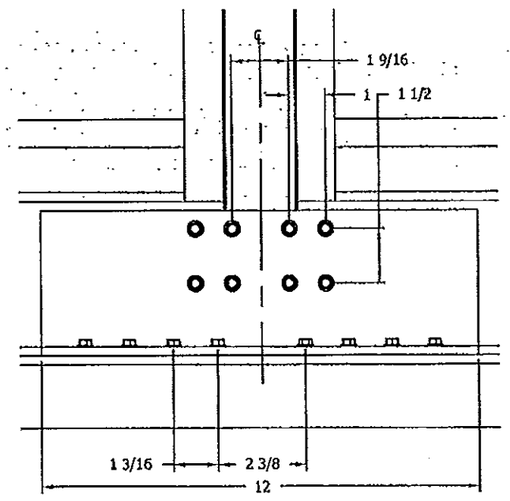

MULLION ELEV DTL (80 PSF) 6/D1 STEEL CONDITION
3" = 1' 0" E3

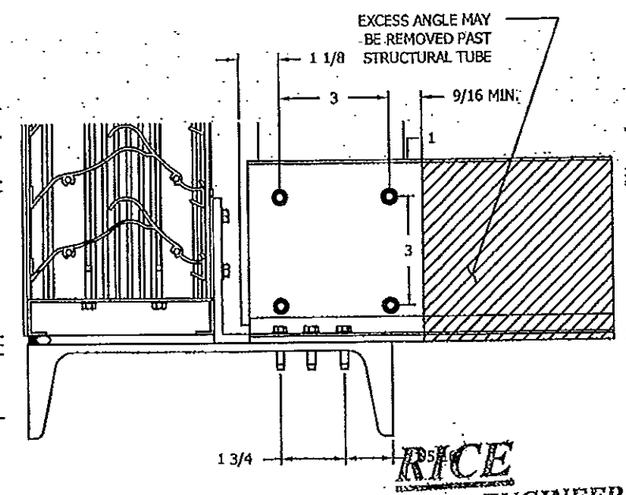

MULLION SECT DTL (150 PSF) 7/D1 STEEL CONDITION
3" = 1' 0" E4

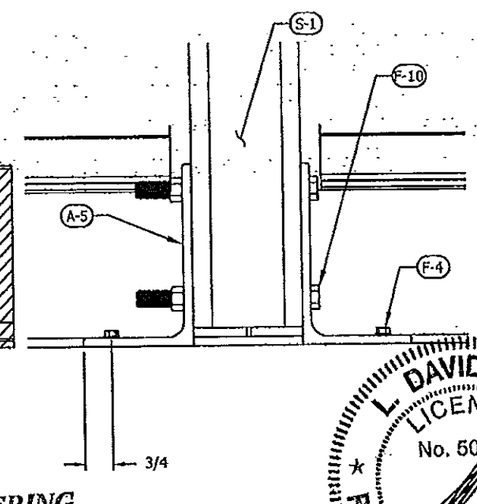

MULLION ELEV DTL (150 PSF) 8/D1 STEEL CONDITION
3" = 1' 0" E4

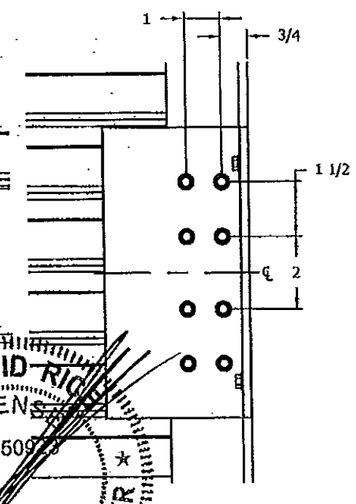

SPLICE ELEV DTL (150 PSF) 10/D1 STEEL CONDITION
3" = 1' 0" E2

PRODUCT REVISED
as complying with the Florida Building Code
Acceptance No 11-0429.04
Expiration Date 10/23/2013
By
Miami Dade Product Control

PRODUCT REVISED
as complying with the Florida Building Code
Acceptance No 11-1117.22
Expiration Date 10/23/2013
By
Miami Dade Product Control

NOTES:
1) INSTALLER TO PROVIDE GASKET MATERIAL BETWEEN DISSIMILAR METALS FOR SEPARATION
2) MULTIPLE SECTION HIGH LOUVERS TO USE WITH 150 PSF INSTALLATION ONLY.

FILE:

REV. NO.	DESCRIPTION	DATE	DRAWN BY
6	MADE CHG'S PER 6/8/11 LETTER	6/14/11	NW
5	ADDED 150 PSF OPTION	12/07/10	TB
4	FASTENER SPACING PER MIAMI DADE	01/21/10	TB
3	UPDATED WITH CD-55 DAMPER OPTION	09/01/09	DNG
2	CHANGED 48" O.C. TO 34" O.C.	07/29/08	DNG
1	CHANGED 60" O.C. TO 48" O.C.	01/09/08	DNG

This drawing and the design represented are the confidential and proprietary property of Pottorff and may not be disclosed, loaned, copied or used for any purpose other than design review and approval without the express written consent of Pottorff.

RICE ENGINEERING
105 School Creek Trail
Luxemburg, WI 54217
Phone 920.845.1042
Fax 920.845.1048
www.rice-inc.com

Florida Firm No: F-01000005061
Certificate of Authorization: #9090
L. David Rice
Registration No: 50923

L. DAVID RICE
LICENSE
No. 50923
STATE OF FLORIDA
PROFESSIONAL ENGINEER
JUN 27 2011

POTTORFF®
5101 Blue Mound Road
Fort Worth, Texas 76106
Phone: 817-831-7038
Fax: 817-831-3110

DRAWING DESC.: ATTACHMENT DETAILS, STEEL CONDITION, 80 & 150 PSF
PROJECT: ECD-845-MD
LOCATION:
ARCHITECT:
CUSTOMER:

DATE: 12/07/2010	DWN BY: TB	POTTORFF ORDER NO.	CUSTOMER P.O. NO.	DRAWING NO.
SCALE: NTS	SHEET: 10 of 17			DC-DI

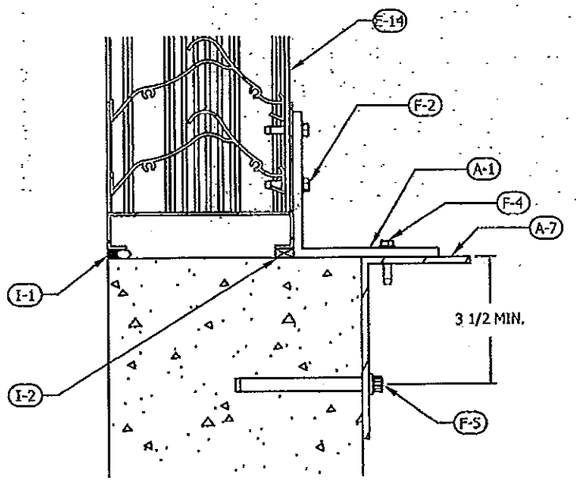

TOP & BTM SECT DTL 1/D2 MASONRY (TENS. CONN, 80 PSF)
3" = 1' 0" E1, E2

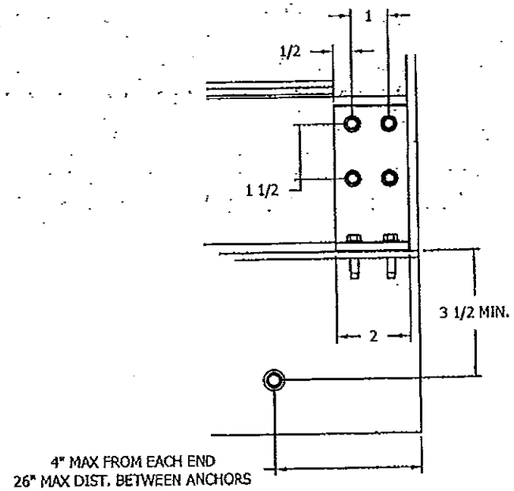

TOP & BTM ELEV DTL 2/D2 MASONRY (TENS. CONN, 80 PSF)
3" = 1' 0" E1, E2, E3, E4

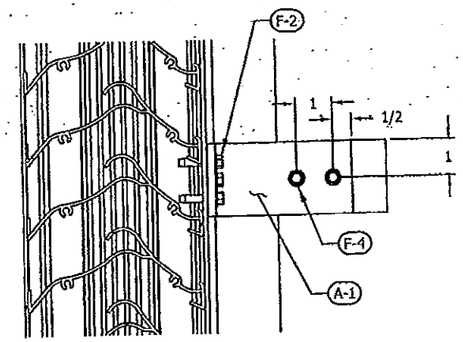

JAMB SECT DTL 3/D2 MASONRY (TENS. CONN, 80 PSF)
3" = 1' 0" E1, E2

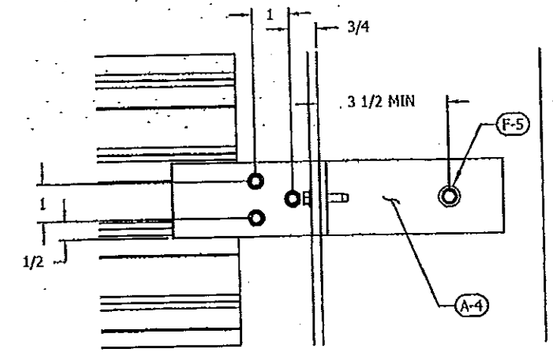

JAMB ELEV DTL 4/D2 MASONRY (TENS. CONN, 80 PSF)
3" = 1' 0" E1, E2, E3, E4

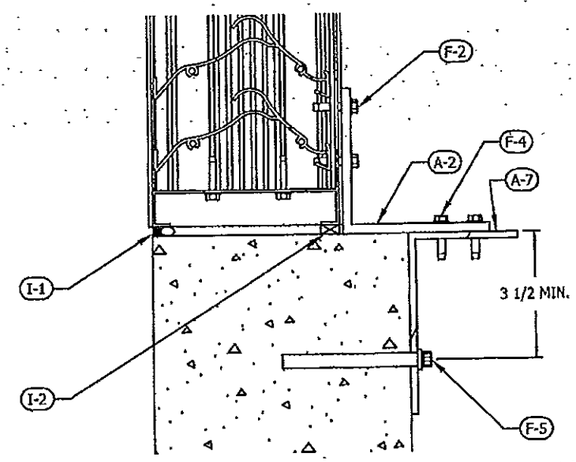

MULLION SECT DTL 5/D2 MASONRY (TENS. CONN, 80 PSF)
3" = 1' 0" E3

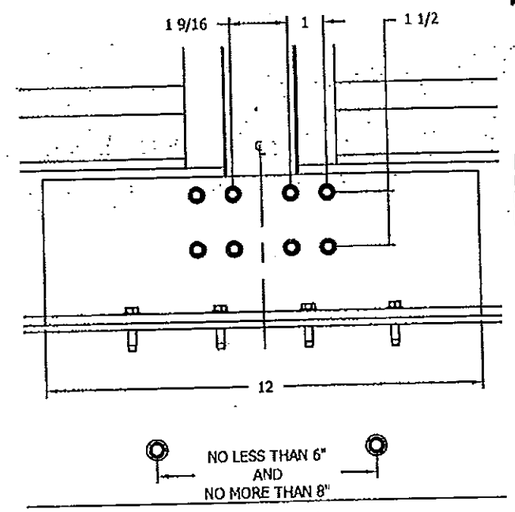

MULLION ELEV DTL 6/D2 MASONRY (TENS. CONN, 80 PSF)
3" = 1' 0" E3

RICE ENGINEERING
105 School Creek Trail.
Luxemburg, WI 54217
Phone 920.845 1042
Fax 920.845 1048
www.rice-inc.com

Florida Firm No. F-01000005061
Certificate of Authorization: #9090
L. David Rice
Registration No: 50923

PRODUCT REVISED
as complying with the Florida Building Code
Acceptance No 11-9429.04
Expiration Date 10/23/2013
By
Miami Dade Product Control

PRODUCT REVISED
as complying with the Florida Building Code
Acceptance No 11-1117.22
Expiration Date 10/23/2018
By
Miami Dade Product Control

L. DAVID RICE
LICENSE
No. 50923
STATE OF FLORIDA
PROFESSIONAL ENGINEER

JUN 27 2011

NOTES:
1) INSTALLER TO PROVIDE GASKET MATERIAL BETWEEN DISSIMILAR METALS FOR SEPARATION

FILE:

REV. NO.	DESCRIPTION	DATE	DRAWN BY
6	MADE CHG'S PER 6/8/11 LETTER	6/14/11	NW
5	ADDED 150 PSF OPTION	12/07/10	TB
4	FASTENER SPACING PER MIAMI DADE	01/21/10	TB
3	UPDATED WITH CD-55 DAMPER OPTION	09/01/09	DNG
2	CHANGED 48" O.C. TO 34" O.C.	07/29/08	DNG
1	CHANGED 60" O.C. TO 48" O.C.	01/09/08	DNG

This drawing and the design represented are the confidential and proprietary property of Pottorff and may not be disclosed, loaned, copied or used for any purpose other than design review and approval without the express written consent of Pottorff.

POTTORFF®
5101 Blue Mound Road
Fort Worth, Texas 76106
Phone: 817-831-7038
Fax: 817-831-3110

DRAWING DESC.: ATTACHMENT DETAILS, MASONRY CONDITION, TENSION CONNECTION, 80 PSF
PROJECT: ECD-545-MD
LOCATION:
ARCHITECT:
CUSTOMER:

DATE: 12/07/2010	DWN BY: TB	POTTORFF ORDER NO.	CUSTOMER P.O. NO.	DRAWING NO.
SCALE: NTS	SHEET: 11 of 17			DC-D2

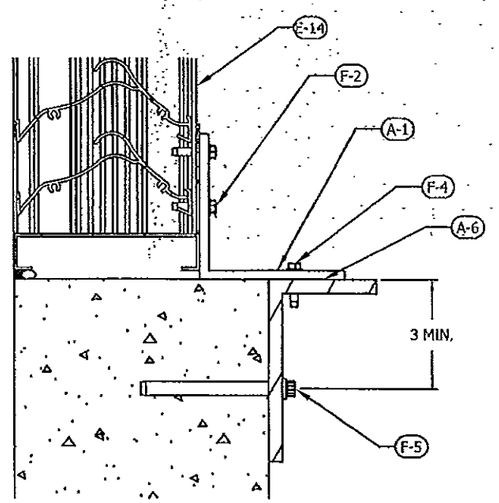

TOP & BTM SECT DTL 1/D3 MASONRY (TENS. CONN., 150 PSF)
3" = 1' 0" E1, E2

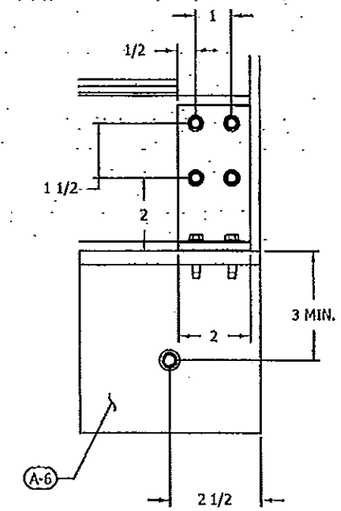

TOP & BTM ELEV DTL 2/D3 MASONRY (TENS. CONN., 150 PSF)
3" = 1' 0" E1, E2, E3, E4

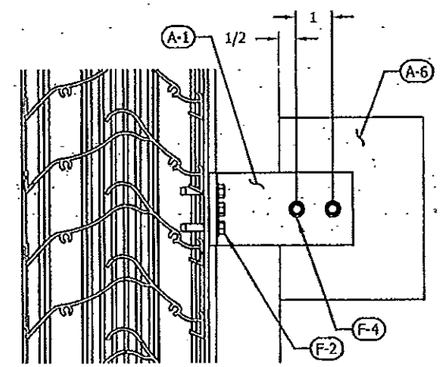

JAMB SECT DTL 3/D3 MASONRY (TENS. CONN., 150 PSF)
3" = 1' 0" E1, E2

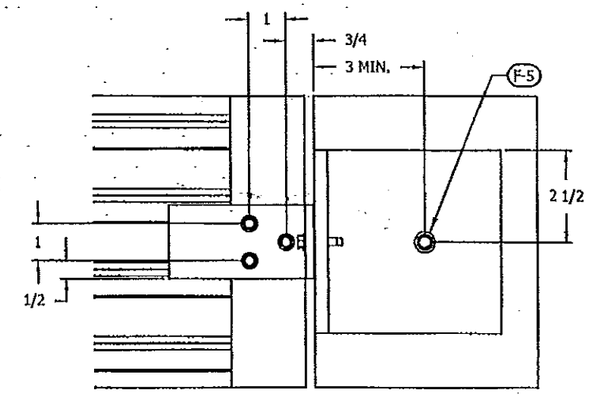

JAMB ELEV DTL 4/D3 MASONRY (TENS. CONN., 150 PSF)
3" = 1' 0" E1, E2, E3, E4

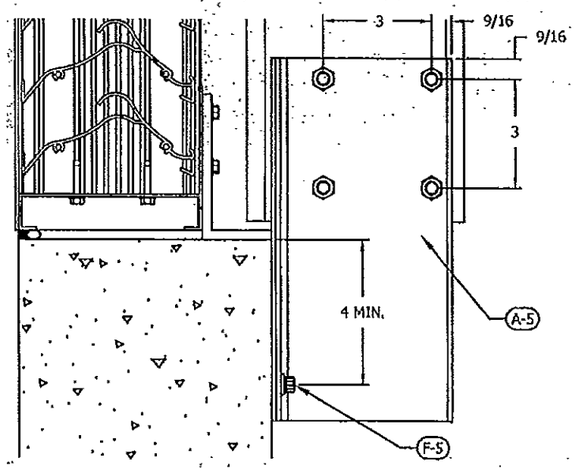

MULLION SECT DTL 7/D3 MASONRY (TENS. CONN., 150 PSF)
3" = 1' 0" E4

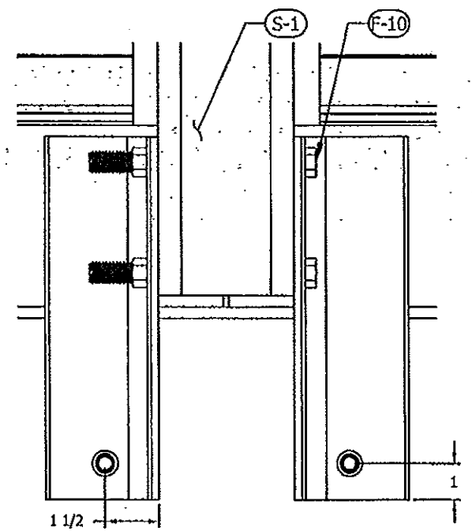

MULLION ELEV DTL 8/D3 MASONRY (TENS. CONN., 150 PSF)
3" = 1' 0" E4

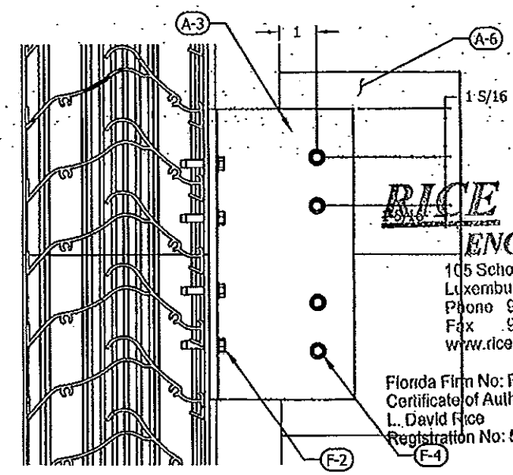

SPLICE SECT DTL 9/D3 MASONRY (TENS. CONN., 150 PSF)
3" = 1' 0" E2

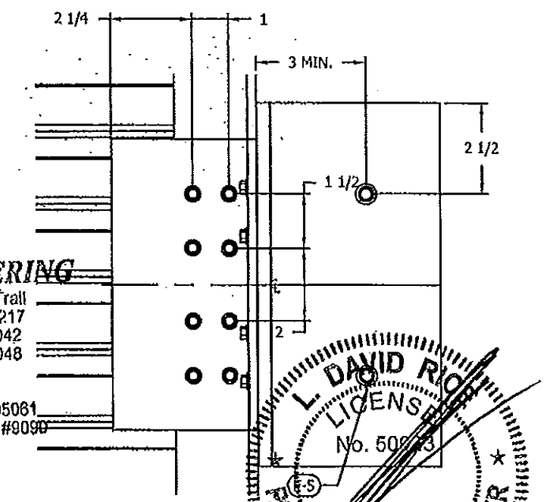

SPLICE ELEV DTL 10/D3 MASONRY (TENS. CONN., 150 PSF)
3" = 1' 0"

RICE ENGINEERING
105 School Creek Trail
Luxemburg, WI 54217
Phone 920.845 1042
Fax 920.845 1048
www.rice-inc.com

Florida Firm No: F-01000005061
Certificate of Authorization: #9090
L. David Rice
Registration No: 50923

L. DAVID RICE LICENSE No. 50923 STATE OF FLORIDA PROFESSIONAL ENGINEER

PRODUCT REVISED
as complying with the Florida Building Code
Acceptance No 11-1117.22
Expiration Date 10/23/2018
By
Miami Dade Product Control

PRODUCT REVISED
as complying with the Florida Building Code
Acceptance No 11-0429.04
Expiration Date 10/23/2013
By
Miami Dade Product Control

NOTES:
1) INSTALLER TO PROVIDE GASKET MATERIAL BETWEEN DISSIMILAR METALS FOR SEPARATION
2) 3/8" HILTI KWIK BOLT 3 (F-9) MAY BE USED AS ALTERNATIVE FOR EPOXY ANCHOR (F-5), SEE SHEET 17

FILE:

REV. NO.	DESCRIPTION	DATE	DRAWN BY
6	MADE CHG'S PER 6/8/11 LETTER	6/14/11	NW
5	ADDED 150 PSF OPTION	12/07/10	TB
4	FASTENER SPACING PER MIAMI-DADE	01/21/10	TB
3	UPDATED WITH CD-55 DAMPER OPTION	09/01/09	DNG
2	CHANGED 48" O.C. TO 34" O.C.	07/29/08	DNG
1	CHANGED 60" O.C. TO 48" O.C.	01/09/08	DNG

This drawing and the design represented are the confidential and proprietary property of Pottorff and may not be disclosed, loaned, copied or used for any purpose other than design review and approval without the express written consent of Pottorff.

POTTORFF®
5101 Blue Mound Road
Fort Worth, Texas 76106
Phone: 817-831-7038
Fax: 817-831-3110

JUN 27 2011

DRAWING DESC.: ATTACHMENT DETAILS, MASONRY CONDITION, TENSION CONNECTION, 150 PSF
PROJECT: ECD-545-MD
LOCATION:
ARCHITECT:
CUSTOMER:

DATE: 12/07/2010	DWN BY: TB	POTTORFF ORDER NO.	CUSTOMER P.O. NO.	DRAWING NO.
SCALE: NTS	SHEET: 12 of 17			DC-D3

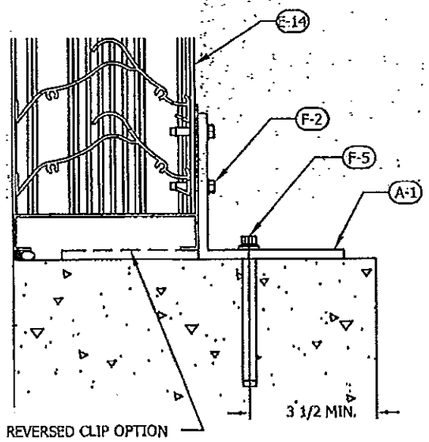

TOP & BTM SECT DTL. 1/D4 MASONRY (SHEAR CONN.)
3" = 1' 0" E1, E2

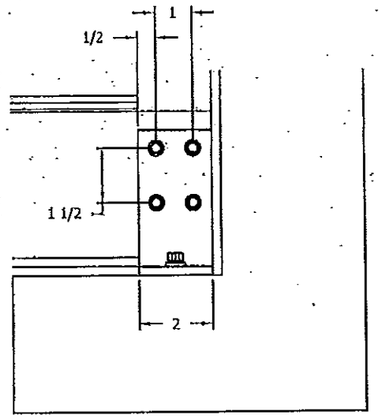

TOP & BTM ELEV DTL. 2/D4 MASONRY (SHEAR CONN.)
3" = 1' 0" E1, E2, E3, E4

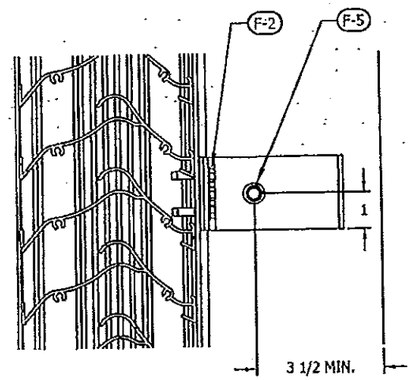

JAMB SECT DTL. 3/D4 MASONRY (SHEAR CONN.)
3" = 1' 0" E1, E2

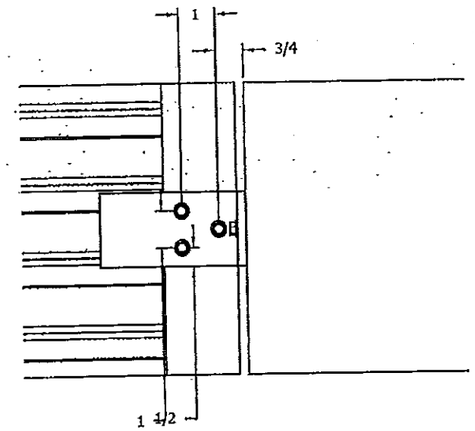

JAMB ELEV DTL 4/D4 MASONRY (SHEAR CONN.)
3" = 1' 0" E1, E2, E3, E4

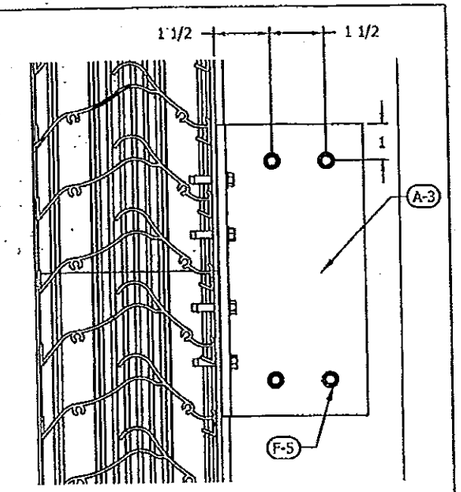

SPLICE SECT DTL (150 PSF) 9/D4 MASONRY (SHEAR CONN.)
3" = 1' 0" E2

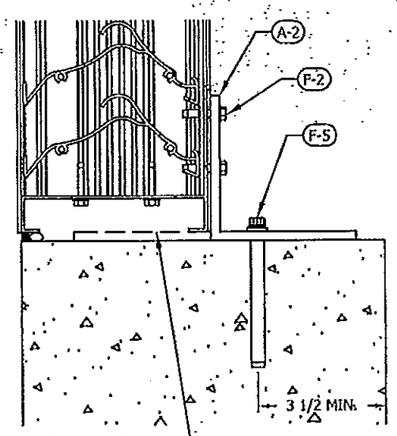

MULLION SECT DTL (80 PSF) 5/D4 MASONRY (SHEAR CONN.)
3" = 1' 0" E3

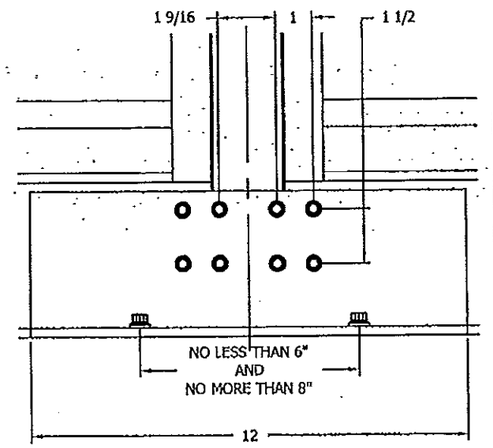

MULLION ELEV DTL (80 PSF) 6/D4 MASONRY (SHEAR CONN.)
3" = 1' 0" E3

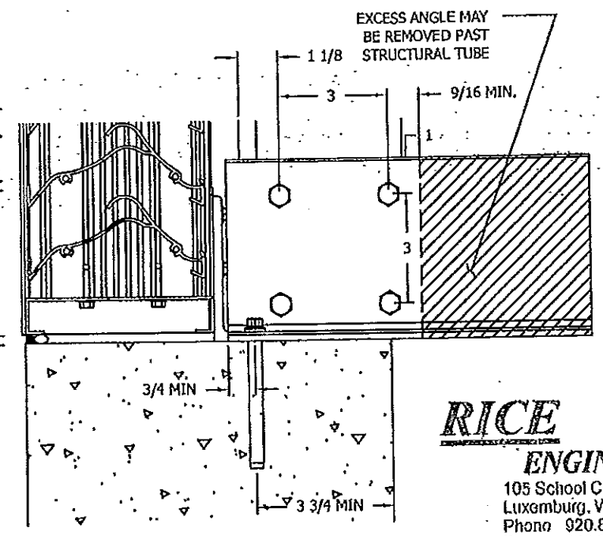

MULLION SECT DTL (150 PSF) 7/D4 MASONRY (SHEAR CONN.)
3" = 1' 0" E4

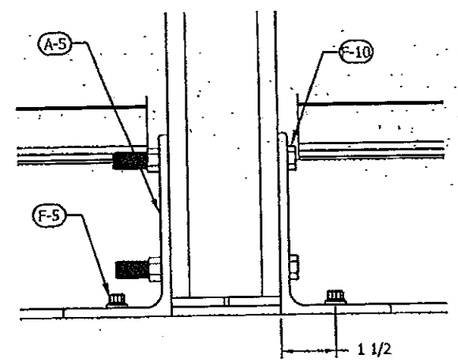

MULLION ELEV DTL (150 PSF) 8/D4 MASONRY (SHEAR CONN.)
3" = 1' 0" E4

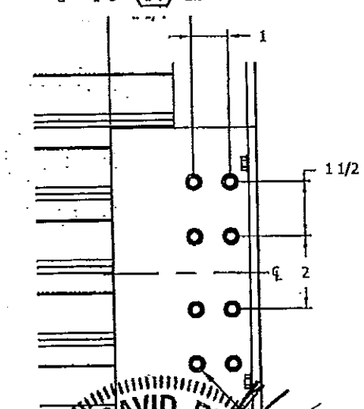

SPLICE ELEV DTL (150 PSF) 10/D4 MASONRY (SHEAR CONN.)

RICE ENGINEERING
105 School Creek Trail
Luxemburg, WI 54217
Phone 920.845.1042
Fax 920.845.1048
www.rice-engineering.com

Florida Firm No: F-01000005061
Certificate of Authorization: #9090
L. David Rice
Registration No: 50923

L. DAVID RICE LICENSED No. 50923 STATE OF FLORIDA PROFESSIONAL ENGINEER

POTTORFF®
5101 Bryant Irvin Rd
Fort Worth, Texas 76106
Phone: 817-831-7038
Fax: 817-831-3110

JUN 27 2011

PRODUCT REVISED
as complying with the Florida Building Code
Acceptance No 11-1117.22
Expiration Date 10/23/2018
By
Miami Dade Product Control

PRODUCT REVISED
as complying with the Florida Building Code
Acceptance No 11-0429.04
Expiration Date 10/23/2013
By
Miami Dade Product Control

NOTES:
1) INSTALLER TO PROVIDE GASKET MATERIAL BETWEEN DISSIMILAR METALS FOR SEPARATION
2) HILTI KWIK BOLT 3 MAY BE USED AS ALTERNATIVE FOR EPOXY ANCHOR (F-5) ON 150 PSF INSTALLATION ONLY, SEE SHEET 17. 1/2" KWIK-BOLT 3 (F-12) REQUIRED FOR SHEAR CONNECTION AT MULLION, 3/8" KWIK BOLT 3 (F-9) EVERYWHERE ELSE.
3) MULTIPLE SECTION HIGH LOUVERS TO USE WITH 150 PSF INSTALLATION ONLY

FILE:

REV. NO.	DESCRIPTION	DATE	DRAWN BY
6	MADE CHG'S PER 6/8/11 LETTER	6/14/11	NW
5	ADDED 150 PSF OPTION	12/07/10	TB
4	FASTENER SPACING PER MIAMI DADE	01/21/10	TB
3	UPDATED WITH CD-55 DAMPER OPTION	09/01/09	DNG
2	CHANGED 48" O.C. TO 34" O.C.	07/29/08	DNG
1	CHANGED 60" O.C. TO 48" O.C.	01/09/08	DNG

This drawing and the design represented are the confidential and proprietary property of Pottorff and may not be disclosed, loaned, copied or used for any purpose other than design review and approval without the express written consent of Pottorff.

DRAWING DESC.: ATTACHMENT DETAILS, MASONRY, SHEAR CONNECTION, 80 & 150 PSF				
PROJECT: ECD-545-MD				
LOCATION:				
ARCHITECT:				
CUSTOMER:				
DATE: 12/07/2010	DWN BY: TB	POTTORFF ORDER NO.	CUSTOMER P.O. NO.	DRAWING NO. DC-D4
SCALE: NTS	SHEET: 13 of 17			

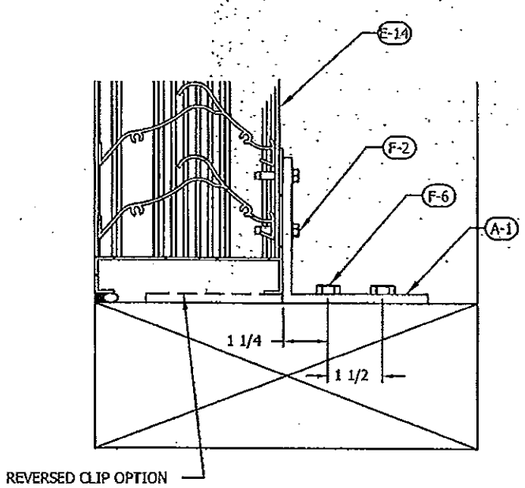

TOP & BTM SECT DTL 1/D5 WOOD COND. (150 PSF ONLY)
3" = 1' 0" E1, E2

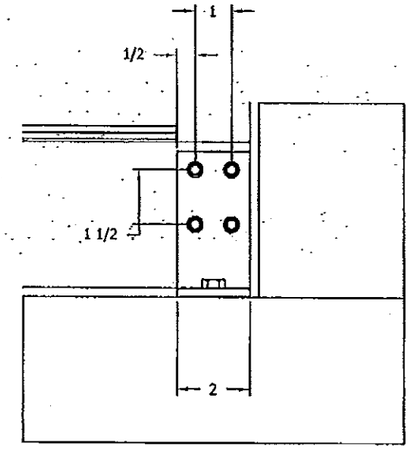

TOP & BTM ELEV DTL 2/D5 WOOD COND. (150 PSF ONLY)
3" = 1' 0" E1, E2, E3, E4

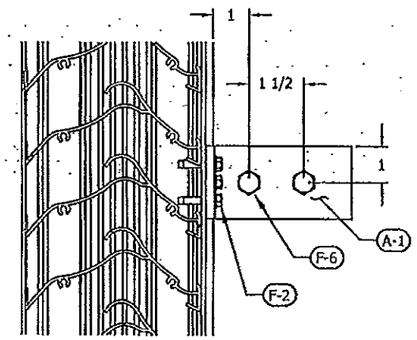

JAMB SECT DTL 3/D5 WOOD COND. (150 PSF ONLY)
3" = 1' 0" E1, E2

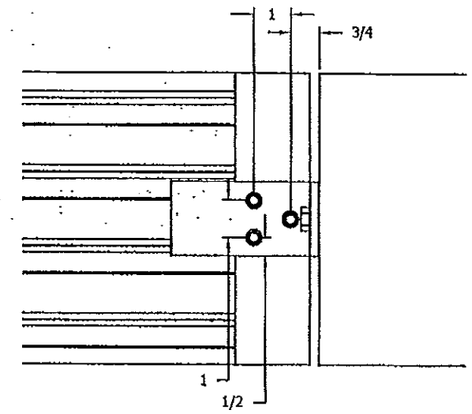

JAMB ELEV DTL 4/D5 WOOD COND. (150 PSF ONLY)
3" = 1' 0" E1, E2, E3, E4

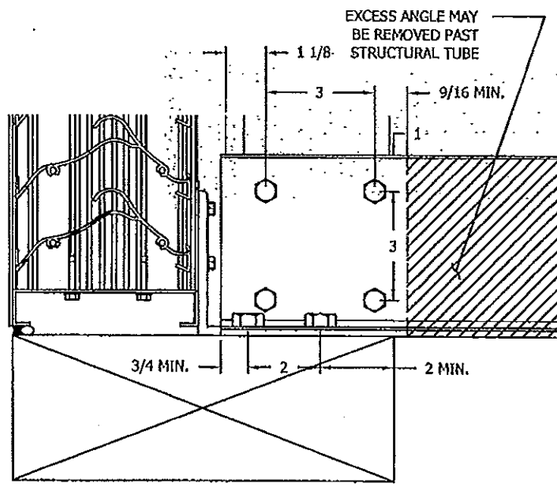

MULLION SECT DTL 7/D5 WOOD COND. (150 PSF ONLY)
3" = 1' 0" E4

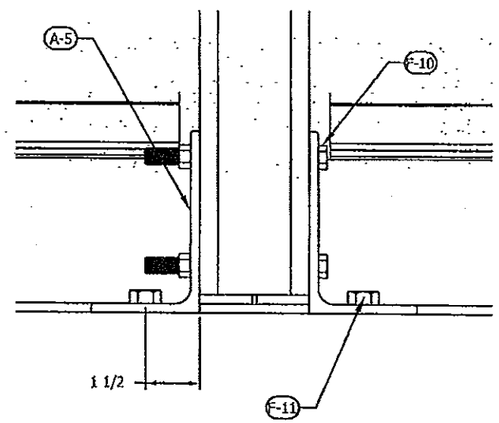

MULLION ELEV DTL 8/D5 WOOD COND. (150 PSF ONLY)
3" = 1' 0" E4

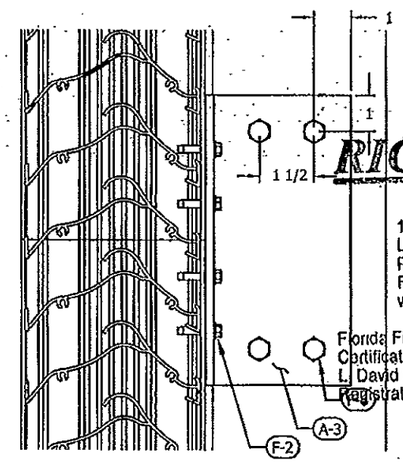

SPLICE SECT DTL 9/D5 WOOD COND. (150 PSF ONLY)
3" = 1' 0" E2

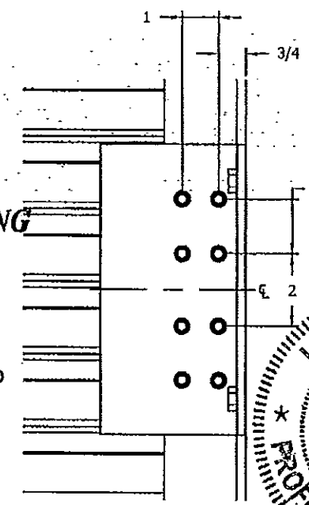

SPLICE ELEV DTL 10/D5 WOOD COND. (150 PSF ONLY)
3" = 1' 0" E2

RICE ENGINEERING
105 School Creek Trail
Luxemburg, WI 54217
Phone 920.845.1042
Fax 920.845.1048
www.rice-inc.com

Florida Firm No: F-01000005081
Certificate of Authorization: #9090
L. David Rice
Registration No: 50923

L. DAVID RICE LICENSE No. 50923 STATE OF FLORIDA PROFESSIONAL ENGINEER

PRODUCT REVISED
as complying with the Florida Building Code
Acceptance No 11-1117.22
Expiration Date 10/23/2018
By
Miami Dade Product Control

PRODUCT REVISED
as complying with the Florida Building Code
Acceptance No 11-0429.04
Expiration Date 10/23/2013
By
Miami Dade Product Control

NOTES:
1) INSTALLER TO PROVIDE GASKET MATERIAL BETWEEN DISSIMILAR METALS FOR SEPARATION
2) WOOD CONDITION TO BE GROUP 3 MINIMUM LUMBER GRADE AS IDENTIFIED BY THE AMERICAN INSTITUTE OF TIMBER CONSTRUCTION

FILE:

REV. NO.	DESCRIPTION	DATE	DRAWN BY
6	MADE CHG'S PER 6/8/11 LETTER	6/14/11	NW
5	ADDED 150 PSF OPTION	12/07/10	TB
4	FASTENER SPACING PER MIAMI DADE	01/21/10	TB
3	UPDATED WITH CD-55 DAMPER OPTION	09/01/09	DNG
2	CHANGED 48" O.C. TO 34" O.C.	07/29/08	DNG
1	CHANGED 60" O.C. TO 48" O.C.	01/09/08	DNG

This drawing and the design represented are the confidential and proprietary property of Pottorff and may not be disclosed, loaned, copied or used for any purpose other than design review and approval without the express written consent of Pottorff.

POTTORFF®

5101 Blue Mound Road
Fort Worth, Texas 76106
Phone: 817-831-7098
Fax: 817-831-3110

JUN 27 2011

DRAWING DESC.: ATTACHMENT DETAILS, WOOD CONDITION, 150 PSF ONLY
PROJECT: ECD-545-MD
LOCATION:
ARCHITECT:
CUSTOMER:

DATE: 12/07/2010	DWN BY: TB	POTTORFF ORDER NO.	CUSTOMER P.O. NO.	DRAWING NO.
SCALE: NTS	SHEET: 14 of 17			DC-D5

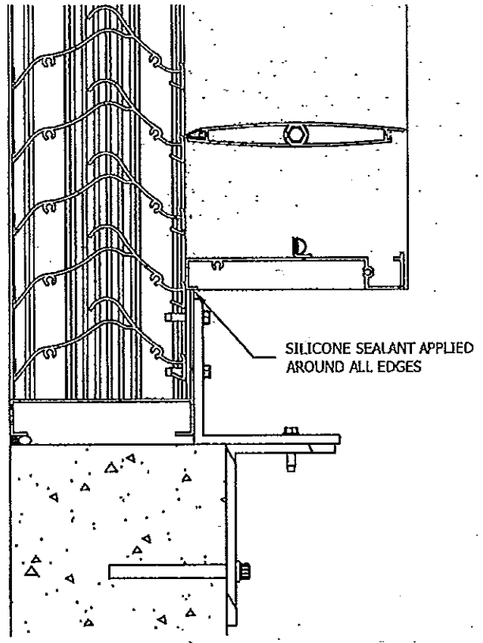

SILL DETAIL 13 D6 CD-55 SECTION DTL E5
3" = 1' 0"

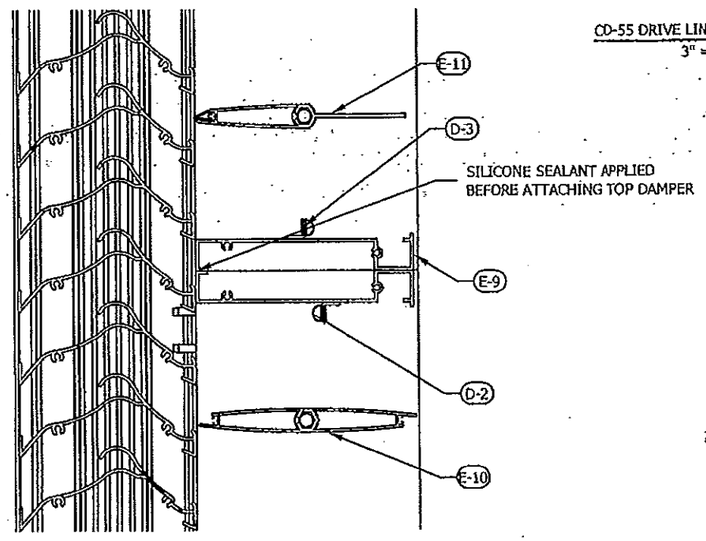

CD-55 MULTI SECT HIGH 14 D6 CD-55 SECTION DTL E5
3" = 1' 0"

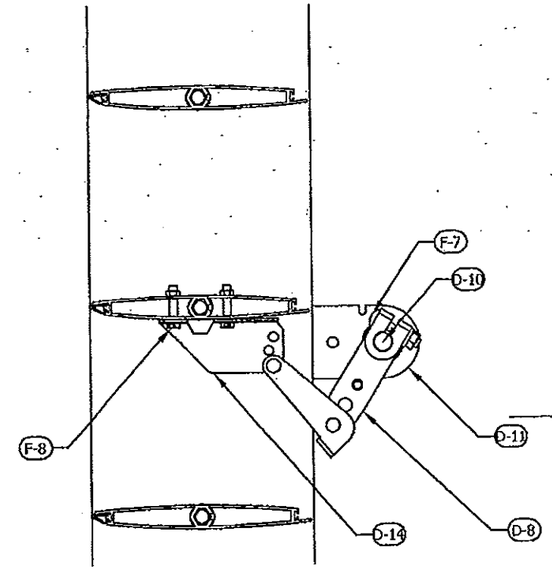

CD-55 DRIVE LINKAGE 15 D6 CD-55 SECT DTL E5
3" = 1' 0"

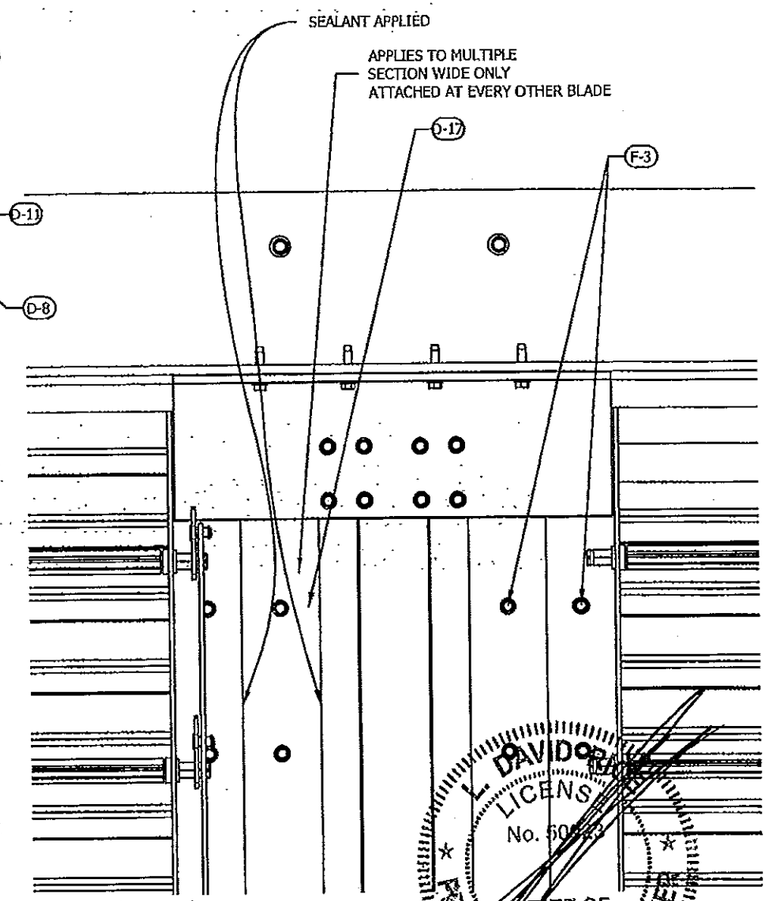

CD-55 MULTI SECT WIDE 16 D6 CD-55 ELEV DTL E5
3" = 1' 0"

PRODUCT REVISED
as complying with the Florida
Building Code
Acceptance No 11-1117.22
Expiration Date 10/23/2018
By
Miami Dade Product Control

PRODUCT REVISED
as complying with the Florida
Building Code
Acceptance No 11-0429.04
Expiration Date 10/23/2013
By
Miami Dade Product Control

RICE
ENGINEERING
105 School Creek Trail
Luxemburg, WI 54217
Phone 920.845 1042
Fax 920.845 1048
www.rice-inc.com

Florida Firm No F-01000005061
Certificate of Authorization: #9090
L David Rice
Registration No: 50923

L. DAVID RICE
LICENSE
No. 50923
STATE OF FLORIDA
PROFESSIONAL ENGINEER

NOTES:
1) INSTALLER TO PROVIDE GASKET MATERIAL BETWEEN DISSIMILAR METALS FOR SEPARATION.
2) WOOD CONDITION TO BE GROUP 3 MINIMUM LUMBER GRADE AS IDENTIFIED BY THE AMERICAN INSTITUTE OF TIMBER CONSTRUCTION

FILE:

REV. NO.	DESCRIPTION	DATE	DRAWN BY
6	MADE CHG'S PER 6/8/11 LETTER	6/14/11	NW
5	ADDED 150 PSF OPTION	12/07/10	TB
4	FASTENER SPACING PER MIAMI DADE	01/21/10	TB
3	UPDATED WITH CD-55 DAMPER OPTION	09/01/09	DNG
2	CHANGED 48" O.C. TO 34" O.C.	07/29/08	DNG
1	CHANGED 60" O.C. TO 48" O.C.	01/09/08	DNG

This drawing and the design represented are the confidential and proprietary property of Pottorff and may not be disclosed, loaned, copied or used for any purpose other than design review and approval without the express written consent of Pottorff.

POTTORFF®
5101 Blue Mound Road
Fort Worth, Texas 76106
Phone: 817-831-7038
Fax: 817-831-3110

JUN 27 2011

DRAWING DESC.: CD-55 DAMPER DETAILS
PROJECT: ECD-545-MD
LOCATION:
ARCHITECT:
CUSTOMER:

DATE: 12/07/2010	DWN BY: TB	POTTORFF ORDER NO.	CUSTOMER P.O. NO.	DRAWING NO.
SCALE: NTS	SHEET: 15 of 17			DC-D6

PART #: E-1
PART NAME: LOUVER HEAD
MATERIAL: 0.081" THICK 6063-T5 EXTRUDED ALUMINUM
SCALE: 3" = 1'-0"

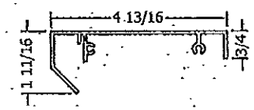

PART #: E-2
PART NAME: LOUVER HEAD, FLANGED
MATERIAL: 0.081" THICK 6063-T5 EXTRUDED ALUMINUM
SCALE: 3" = 1'-0"

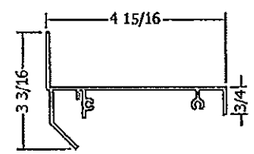

PART #: E-3
PART NAME: LOUVER BLADE
MATERIAL: 0.081" THICK 6063-T5 EXTRUDED ALUMINUM
SCALE: 3" = 1'-0"

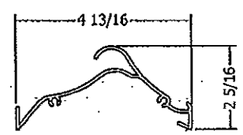

PART #: E-4
PART NAME: LOUVER JAMB
MATERIAL: 0.125" THICK 6063-T5 EXTRUDED ALUMINUM
SCALE: 3" = 1'-0"

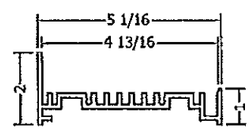

PART #: E-5
PART NAME: LOUVER JAMB, FLANGED
MATERIAL: 0.125" THICK 6063-T5 EXTRUDED ALUMINUM
SCALE: 3" = 1'-0"

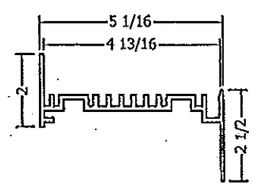

PART #: E-6
PART NAME: I-MULLION
MATERIAL: 0.078" THICK 6063-T5 EXTRUDED ALUMINUM
SCALE: 3" = 1'-0"

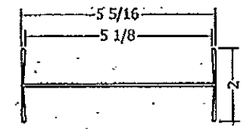

PART #: E-7
PART NAME: LOUVER SILL
MATERIAL: 0.081" THICK 6063-T5 EXTRUDED ALUMINUM
SCALE: 3" = 1'-0"

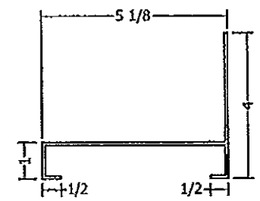

PART #: E-8
PART NAME: LOUVER SILL, FLANGED
MATERIAL: 0.081" THICK 6063-T5 EXTRUDED ALUMINUM
SCALE: 3" = 1'-0"

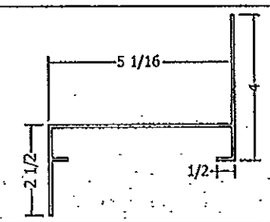

PART #: E-9
PART NAME: DAMPER SILL
MATERIAL: 0.081" THICK 6063-T5 EXTRUDED ALUMINUM
SCALE: 3" = 1'-0"

PART #: E-10
PART NAME: DAMPER AIRFOIL BLADE, FULL
MATERIAL: 0.070" THICK 6063-T5 EXTRUDED ALUMINUM
SCALE: 3" = 1'-0"

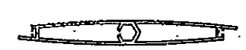

PART #: E-11
PART NAME: DAMPER AIRFOIL BLADE, HALF
MATERIAL: 0.070" THICK 6063-T5 EXTRUDED ALUMINUM
SCALE: 3" = 1'-0"

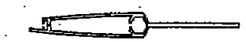

PART #: E-12
PART NAME: ROLLFRAME EXTRUSION
MATERIAL: 0.081" THICK 6063-T5 EXTRUDED ALUMINUM
SCALE: 3" = 1'-0"

PART #: E-13
PART NAME: EXTRUDED ALUMINUM ANGLE
MATERIAL: 6 1/8" x 2" x 1/8" 6063-T5 EXTRUDED ALUMINUM
SCALE: 3" = 1'-0"

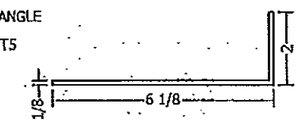

PART #: L-1
PART NAME: SLEEVE
MATERIAL: 0.125" THICK 5052-H32 SHEET ALUMINUM
SCALE: 3" = 1'-0"

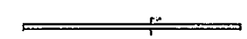

RICE ENGINEERING
105 School Creek Trail
Luxemburg, WI 54217
Phone 920.845 1042
Fax 920.845 1048
www.rice-inc.com

Florida Firm No F-01000005061
Certificate of Authorization: #9090
L. David Rice
Registration No: 50923

L. DAVID RICE LICENSE No. 50923 STATE OF FLORIDA PROFESSIONAL ENGINEER

PRODUCT REVISED
as complying with the Florida Building Code
Acceptance No 11-1117.22
Expiration Date 10/23/2018
By
Miami-Dade Product Control

PRODUCT REVISED
as complying with the Florida Building Code
Acceptance No 11-0429.04
Expiration Date 10/23/2013
By
Miami-Dade Product Control

FILE:

REV. NO.	DESCRIPTION	DATE	DRAWN BY
6	MADE CHG'S PER 6/8/11 LETTER	6/14/11	NW
5	ADDED 150 PSF OPTION	12/07/10	TB
4	FASTENER SPACING PER MIAMI DADE	01/21/10	TB
3	UPDATED WITH CD-55 DAMPER OPTION	09/01/09	DNG
2	CHANGED 48" O.C. TO 34" O.C.	07/29/08	DNG
1	CHANGED 60" O.C. TO 48" O.C.	01/09/08	DNG

This drawing and the design represented are the confidential and proprietary property of Pottorff and may not be disclosed, loaned, copied or used for any purpose other than design review and approval without the express written consent of Pottorff.

POTTORFF®

5101 Blue Mound Road
Fort Worth, Texas 76106
Phone: 817-831-7038
Fax: 817-831-3110

JUN 27 2011

DRAWING DESC.: BILL OF MATERIALS
PROJECT: ECD-545-MD
LOCATION:
ARCHITECT:
CUSTOMER:

DATE: 12/07/2010	DWN BY: TB	POTTORFF ORDER NO.	CUSTOMER P.O. NO.	DRAWING NO.
SCALE: N/A	SHEET: 16 of 17			DC-B1

PART #: A-1
PART NAME: CLIP ANGLE
MATERIAL: 4" x 4" x 1/4" x 2"L 6061-T6 EXTRUDED ALUMINUM
SCALE: 3" = 1'-0"

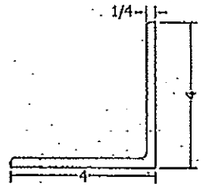

PART #: A-2
PART NAME: MULLION CLIP ANGLE
MATERIAL: 4" x 4" x 1/4" x 12"L 6061-T6 EXTRUDED ALUMINUM
SCALE: 3" = 1'-0"

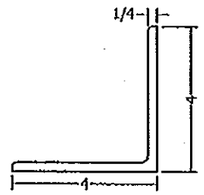

PART #: A-3
PART NAME: SPLICE ANGLE
MATERIAL: 4" x 4" x 1/4" x 8"L 6061-T6 EXTRUDED ALUMINUM
SCALE: 3" = 1'-0"

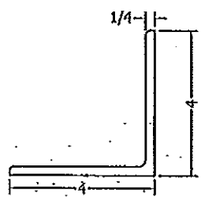

PART #: A-4
PART NAME: INTERMEDIATE JAMB CONDITION CLIP ANGLE
MATERIAL: 5" x 3" x 3/16" x 2"L 6063-T5 EXTRUDED ALUMINUM
SCALE: 3" = 1'-0"

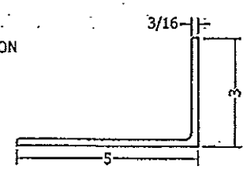

PART #: A-5
PART NAME: STRUCTURAL ANGLE, LONG
MATERIAL: 5" x 3" x 3/8" x 10"L 6061-T6 EXTRUDED ALUMINUM
SCALE: 3" = 1'-0"

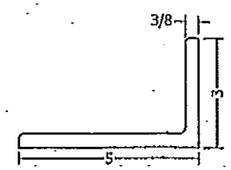

PART #: A-6
PART NAME: STRUCTURAL ANGLE, SHORT
MATERIAL: 5" x 3" x 3/8" x 5"L 6061-T6 EXTRUDED ALUMINUM
SCALE: 3" = 1'-0"

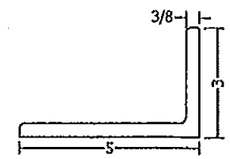

PART #: A-7
PART NAME: CONTINUOUS ANGLE
MATERIAL: 5" x 3" x 3/16" 6063-T5 EXTRUDED ALUMINUM
SCALE: 3" = 1'-0"

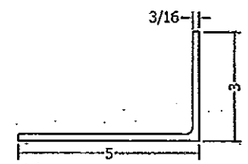

PART #: S-1
PART NAME: TUBE SUPPORT BY OTHERS
MATERIAL: 5" x 3" x 1/4" ASTM A36 STRUCTURAL TUBE STEEL
SCALE: 3" = 1'-0"

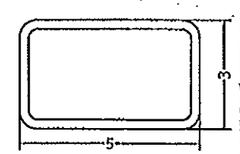

PRODUCT REVISED
as complying with the Florida Building Code
Acceptance No 11-1117.22
Expiration Date 10/23/2013
By
Miami Dade Product Control

MISC. FASTENERS

PART #	DESCRIPTION
F-1	#10-24 X 3/4"L, 410 S.S., 'F' POINT THREAD-CUTTING MACHINE SCREW, BRIGHT HARDENED, PASSIVATED & WAXED, MADE IN U.S.A.
F-2	#12-24 X 1"L, 410 S.S., 'F' POINT THREAD-CUTTING MACHINE SCREW, BRIGHT HARDENED, PASSIVATED & WAXED, MADE IN U.S.A.
F-3	#10-24 X 3/4"L, 410 S.S., SELF-DRILLING TEK MACHINE SCREW
F-4	#12-24 x 1"L, 410 S.S., SELF-DRILLING TEK MACHINE SCREW
F-5	Ø3/8" x 3/8"L HILTI HIT HY 150 EPOXY INJECTED ADHESIVE ANCHOR W/ 5 1/8"L S.S. HAS ROD, EMBEDMENT DEPTH OF 3 1/2"
F-6	3/8- x 2 1/2" STEEL LAG BOLT, ZINC PLATED W/ STEEL FLAT WASHER, ZINC PLATED
F-7	5/16-18 1 1/4" L ROUND HEAD, SQUARE NECK BOLT & S/16-18 FLANGED HEX NUT
F-8	1/4-20 x 1 1/4" L HEX HEAD BOLT & 1/4-20 HEX NUT
F-9	Ø3/8" x 5"L S.S. HILTI KWIK-BOLT 3, EMBEDMENT DEPTH OF 3 1/2"
F-10	3/8-16 x 5" L S.S. HEX HEAD BOLT & 3/8-16 HEX NUT
F-11	1/2- x 3 1/2" STEEL LAG BOLT, ZINC PLATED W/ STEEL FLAT WASHER, ZINC PLATED
F-12	Ø1/2" x 4 1/2"L S.S. HILTI KWIK-BOLT 3, EMBEDMENT DEPTH OF 3 1/2"

MISC. DAMPER PARTS

PART #	DESCRIPTION	MATERIAL
D-1	BLADE SEAL	PVC
D-2	STOP SEAL	PVC
D-3	BLADE STOP, 14 GA. FORMED ALUMINUM	0.063" ALUMINUM
D-4	HEX AXLE, 304 SST	304 SST
D-5	HEX BUSHING,	OIL IMPREGNATED SST
D-6	PARALLEL CAM, 304 SST	304 SST
D-7	LINK BAR, 1/2" x 1/8" GALV FLAT BAR	1/2" x 1/8" GALVANIZED FLAT BAR
D-8	KNEE LOCK ASSEMBLY, GALV.	GALVANIZED
D-9	WASHER, NYLON	NYLON
D-10	JACKSHAFT, GALV	GALVANIZED
D-11	JACKSHAFT BRACKET, GALV	12 GA. GALVANIZED
D-12	JACKSHAFT BEARING	STEEL
D-13	JACKSHAFT SPRING CLIP	SPRING STEEL
D-14	BLADE BRACKET	14 GA. SST
D-15	PIN	304 SST
D-16	E-RING	ZINC PLATED STEEL
D-17	MULTI-SECTION COVER PLATE	0.125" ALUMINUM

INSTALLATION NOTES

PART #	DESCRIPTION
I-1	SEALANT AND BACKER ROD PROVIDED BY INSTALLER (TYP)
I-2	SHIM AS REQUIRED TO MAKE LEVEL AND PLUMB. PROVIDED BY INSTALLER (TYP)

SCREEN & FRAME

PART #	DESCRIPTION
E-14	SCREEN FRAME, 0.065" THICK, 6063-T5 EXTRUDED ALUMINUM W/ 1/2" x 0.050" EXPANDED ALUMINUM BIRD SCREEN

RICE ENGINEERING
105 School Creek Trail
Luxemburg WI 54217
Phone 920.845 1042
Fax 920.845 1048
www.rice-inc.com

Florida Firm No: F-01000005061
Certificate of Authorization: #9090
L. David Rice
Registration No: 50923

L. DAVID RICE LICENSE No. 50923 STATE OF FLORIDA PROFESSIONAL ENGINEER
JUN 27 2011

PRODUCT REVISED
as complying with the Florida Building Code
Acceptance No 11-0429.04
Expiration Date 10/23/2013
By
Miami Dade Product Control

FILE:

REV. NO.	DESCRIPTION	DATE	DRAWN BY
6	MADE CHG'S PER 6/8/11 LETTER	6/14/11	NW
5	ADDED 150 PSF OPTION	12/07/10	TB
4	FASTENER SPACING PER MIAMI DADE	01/21/10	TB
3	UPDATED WITH CD-55 DAMPER OPTION	09/01/09	DNG
2	CHANGED 48" O.C. TO 34" O.C.	07/29/08	DNG
1	CHANGED 60" O.C. TO 48" O.C.	01/09/08	DNG

This drawing and the design represented are the confidential and proprietary property of Pottorff and may not be disclosed, loaned, copied or used for any purpose other than design review and approval without the express written consent of Pottorff.

POTTORFF®
5101 Bide Mill Road
Fort Worth, Texas 76118
Phone: 817-831-7038
Fax: 817-831-3110

DRAWING DESC.: BILL OF MATERIALS
PROJECT: ECD-545-MD
LOCATION:
ARCHITECT:
CUSTOMER:

DATE: 12/07/2010	DWN BY: TB	POTTORFF ORDER NO.	CUSTOMER P.O. NO.	DRAWING NO.
SCALE: N/A	SHEET: 17 of 17			DC-B2