MIAMI-DADE COUNTY
DEPARTMENT OF PERMITTING, ENVIRONMENT, AND REGULATORY AFFAIRS (PERA)
BOARD AND CODE ADMINISTRATION DIVISION

MIAMI-DADE COUNTY
PRODUCT CONTROL SECTION
11805 SW 26 Street, Room 208
Miami, Florida 33175-2474
T (786) 315-2590 F (786) 315-2599
www.miamidade.gov/building

NOTICE OF ACCEPTANCE (NOA)

Roll-A-Way By QMI
1661 Glenlake Avenue
Itasca, IL 60143

SCOPE:
This NOA is being issued under the applicable rules and regulations governing the use of construction materials. The documentation submitted has been reviewed and accepted by Miami-Dade County PERA-Product Control Section to be used in Miami Dade County and other areas where allowed by the Authority Having Jurisdiction (AHJ).

This NOA shall not be valid after the expiration date stated below. The Miami-Dade County Product Control Section (In Miami Dade County) and/or the AHJ (in areas other than Miami Dade County) reserve the right to have this product or material tested for quality assurance purposes. If this product or material fails to perform in the accepted manner, the manufacturer will incur the expense of such testing and the AHJ may immediately revoke, modify, or suspend the use of such product or material within their jurisdiction. PERA reserves the right to revoke this acceptance, if it is determined by Miami-Dade County Product Control Section that this product or material fails to meet the requirements of the applicable building code.

This product is approved as described herein, and has been designed to comply with the High Velocity Hurricane Zone of the Florida Building Code.

DESCRIPTION: AL7-E Single Wall Extruded Aluminum Roll Wind Abatement System

APPROVAL DOCUMENT: Drawing No. 3-01-038, titled " HVHZ Roll-Up Wind Abatement System ", sheets 1 through 7 of 7, prepared by Roll-A-Way by QMI, dated January 23, 2012, signed and sealed by D. L. Fowler, P.E., bearing the Miami-Dade County Product Control Revision stamp with the Notice of Acceptance number and the expiration date by the Miami-Dade County Product Control Section.

MISSILE IMPACT RATING: Large and Small Missile Impact Resistant

LABELING: Each unit shall bear a permanent label with the manufacturer's name or logo, city, state, the following statement: "Miami-Dade County Product Control Approved", and NOA number, per TAS-201, TAS-202, and TAS-203, unless otherwise noted herein.

RENEWAL of this NOA shall be considered after a renewal application has been filed and there has been no change in the applicable building code negatively affecting the performance of this product.

TERMINATION of this NOA will occur after the expiration date or if there has been a revision or change in the materials, use, and/or manufacture of the product or process. Misuse of this NOA as an endorsement of any product, for sales, advertising or any other purposes shall automatically terminate this NOA. Failure to comply with any section of this NOA shall be cause for termination and removal of NOA.

ADVERTISEMENT: The NOA number preceded by the words Miami-Dade County, Florida, and followed by the expiration date may be displayed in advertising literature. If any portion of the NOA is displayed, then it shall be done in its entirety.

INSPECTION: A copy of this entire NOA shall be provided to the user by the manufacturer or its distributors and shall be available for inspection at the job site at the request of the Building Official.
This NOA **revises NOA #09-0604.14** and consists of this page 1, evidence submitted pages E-1 & E-2 as well as approval document mentioned above.
The submitted documentation was reviewed by **Helmy A. Makar, P.E., M.S.**

MIAMI-DADE COUNTY APPROVED

Helmy A. Makar
02/09/2012

NOA No. 11-1118.04
Expiration Date: 05/05/2016
Approval Date: 02/09/2012

Roll-A-Way By QMI

NOTICE OF ACCEPTANCE: EVIDENCE SUBMITTED

1. EVIDENCE SUBMITTED UNDER PREVIOUS APPROVAL # 09-0604.14

A. DRAWINGS

1. *Drawing No. 3-01-038, titled " HVHZ Roll-Up Wind Abatement System ", sheets 1 through 7 of 7, prepared by Roll-A-Way by QMI, dated April 16, 2010, signed and sealed by D.L.Fowler, P.E.*

B. TESTS

1. *Test report on Large Missile Impact Test, Cyclic Wind Pressure Test and Uniform Static Air Pressure Test of AL7-E Hurricane Rolling Abatement System, prepared by Certified Testing Laboratories, Report No. CTLA 2017W-1, dated April 16, 2010, signed and sealed by Ramesh Patel, P.E.*

C. CALCULATIONS

1. *Comparative Analysis and Anchor calculations dated May 12, 2009, 10 pages, prepared by Roll-A-Way By QMI, signed and sealed by Donald L. Fowler, P.E.*
2. *Comparative Analysis and Anchor calculations dated July 02, 2009, 4 pages, prepared by Roll-A-Way By QMI, signed and sealed by Donald L. Fowler, P.E.*
3. *Comparative Analysis and Anchor calculations dated January 11, 2011, 32 pages, prepared by Roll-A-Way By QMI, signed and sealed by Donald L. Fowler, P.E.*

D. QUALITY ASSURANCE

1. *By Miami-Dade County Building and Neighborhood Compliance Department (BNC).*

E. MATERIAL CERTIFICATIONS

1. *Die drawings.*
2. *Tensile Test, report #CTL0234T, dated April 15, 2010, prepared by Certified Testing Laboratories signed and sealed by Ramesh Patel, P.E.*

2. NEW EVIDENCE SUBMITTED

A. DRAWINGS

1. *Drawing No. 3-01-038, titled " HVHZ Roll-Up Wind Abatement System ", sheets 1 through 7 of 7, prepared by Roll-A-Way by QMI, dated January 23, 2012, signed and sealed by D. L. Fowler, P.E.*

B. TESTS

1. *None.*

Helmy A. Makar, P.E., M.S.
PERA, Product Control Unit Supervisor
NOA No. 11-1118.04
Expiration Date: 05/05/2016
Approval Date: 02/09/2012

NOTICE OF ACCEPTANCE: EVIDENCE SUBMITTED

C. CALCULATIONS

1. None.

D. QUALITY ASSURANCE

1. By Miami-Dade County Department of Permitting, Environment, and Regulatory Affairs (PERA).

E. MATERIAL CERTIFICATIONS

1. None.

Helmy A. Makar, P.E., M.S.
PERA, Product Control Unit Supervisor
NOA No. 11-1118.04
Expiration Date: 05/05/2016
Approval Date: 02/09/2012

TYPICAL SINGLE UNIT
ELEVATION
(NO STORM BARS REQUIRED)

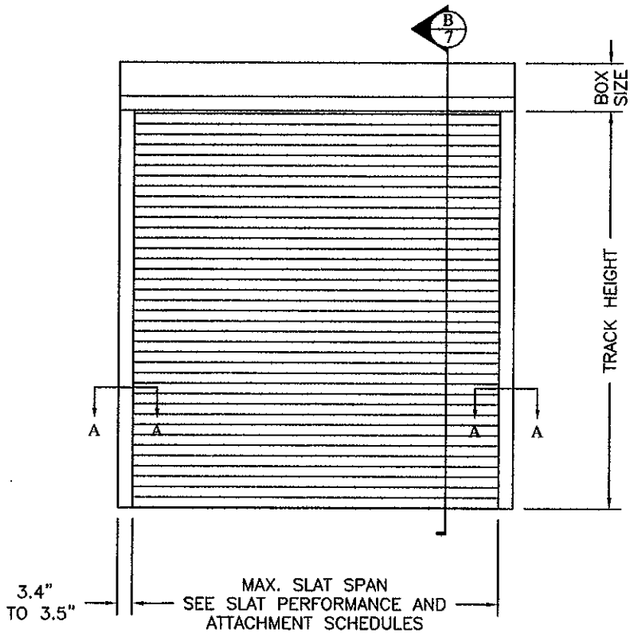

TYPICAL MULTIPLE UNIT
ELEVATION
(NO STORM BARS REQUIRED)
(UNITS SHARE CENTER SUPPORT)

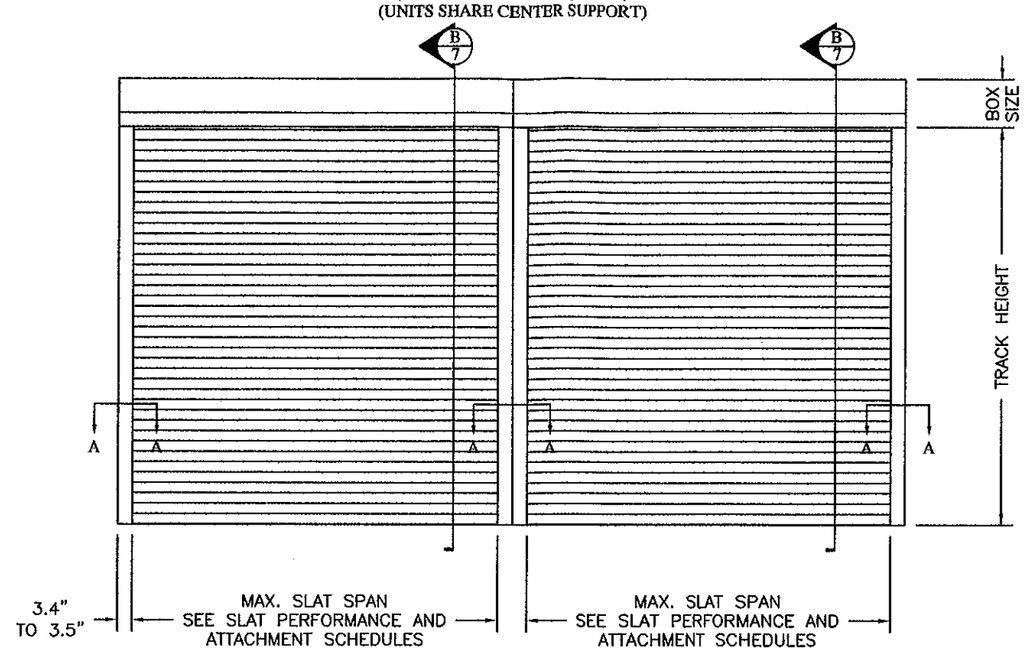

Roll-a-way™ THE ORIGINAL BY QMI

Roll-a-way By QMI
1661 GLENLAKE AVENUE
ITASCA, IL 60143
COPYRIGHT © 2008
QUALITAS MANUFACTURING INC.

DRAWING TITLE:
HVHZ
ROLL-UP WIND ABATEMENT
SYSTEM

GENERAL NOTES:

1. THIS NOTICE OF ACCEPTANCE DRAWING FOR END RETENTION ROLLING ABATEMENT PRODUCTS IS DESIGNED IN ACCORDANCE WITH THE FLORIDA BUILDING CODE (FBC) 2010, HIGH VELOCITY HURRICANE ZONE. WIND LOADING REQUIREMENTS SHALL BE DETERMINED USING THE FLORIDA BUILDING CODE 2010 AND SECTIONS OF ASCE 7-10 PER THE FLORIDA BUILDING CODE. PRODUCT TESTING RECORDS AND REPORTS PER CTLA 2017W & CTLA 2017W-1.
2. ALL ALUMINUM EXTRUSIONS SHALL BE SPECIFIED HERE-IN.
3. ALL SCREWS TO BE STAINLESS STEEL 304 OR 316 SERIES WITH MINIMUM 50 KSI YIELD POINT AND MINIMUM 85 KSI TENSILE STRENGTH, ALUMINUM, DACROMET COATED STEEL, OR GALVANIZED STEEL. (SS SMS = STAINLESS STEEL SHEET METAL SCREW)
4. ANCHORS TO WALL SHALL BE AS FOLLOWS (UNLESS OTHERWISE NOTED):
   (A) TO EXISTING 4000 PSI MIN. CONCRETE, OR AS SPECIFIED HEREIN:
   -Ø1/4" TAPCON ANCHORS, AS MANUFACTURED BY ELCO INDUSTRIES
   -Ø3/8" POWER WEDGE BOLTS, AS MANUFACTURED BY POWERS FASTENING, INC .
   NOTES:
   A.1) MINIMUM EMBEDMENT OF TAPCON ANCHORS AND CRETE FLEX ANCHORS ANCHORS INTO CONCRETE SHALL BE 1 ¾" UNLESS OTHERWISE SPECIFIED HEREIN.
   A.2) MINIMUM EMBEDMENT OF POWER WEDGE BOLTS SHALL BE 3.75".
   A.3) IN CASE THAT PRECAST STONE, PRECAST CONCRETE PANELS ARE FOUND ON THE EXISTING WALL, ANCHORS SHALL BE LONG ENOUGH TO REACH THE MAIN STRUCTURE BEHIND SUCH PANELS. EMBEDMENT SHALL BE PER THE LISTED MINIMUMS.
   (B) TO EXISTING CONCRETE BLOCK WALL:
   -Ø1/4" TAPCON ANCHORS, AS MANUFACTURED BY ELCO INDUSTRIES.
   NOTES:
   B.1) MINIMUM EMBEDMENT OF TAPCON ANCHORS INTO THE CONCRETE BLOCK UNIT SHALL BE 1 1/4" UNLESS OTHERWISE SPECIFIED HEREIN.
   B.2) IN CASE THAT PRECAST STONE, PRECAST CONCRETE PANELS, ARE FOUND ON THE EXISTING WALL, ANCHORS SHALL BE LONG ENOUGH TO REACH THE MAIN STRUCTURE BEHIND SUCH PANELS. EMBEDMENT SHALL BE 1 1/4" MINIMUM.
   (C) ANCHORS SHALL BE INSTALLED FOLLOWING ALL OF THE RECOMMENDATIONS AND SPECIFICATIONS OF THE ANCHOR'S MANUFACTURER.
   (D) ANCHORAGE TO WOOD FRAME BUILDINGS SHALL BE CENTERED IN THE VERTICAL WALL STUDS.
   (E) ANCHOR MINIMUM EMBEDMENT DOES NOT INCLUDE EXTERIOR FINISH.
   (F) ANCHORAGE SHALL BE INSTALLED INTO THE BUILDING'S MAIN WIND-FORCE RESISTANT STRUCTURAL COMPONENTS TO ENSURE A LOAD PATH INTO THE BUILDING'S FOUNDATION.
5. IT SHALL BE THE RESPONSIBILITY OF THE INSTALLATION CONTRACTOR TO VERIFY THE SOUNDNESS OF THE STRUCTURE WHERE ROLL-UP WIND ABATEMENT SYSTEM IS TO BE STRUCTURALLY ATTACHED TO ENSURE PROPER ANCHORAGE PER NOTE 4.
6. THIS APPROVAL DOES NOT INCLUDE NOR COVER ROLL-UP MECHANISMS, ANY ELECTRICAL INSTALLATIONS, OR MODIFICATIONS NECESSARY TO FACILITATE THEM.
7. TRACK MOUNTING CONDITIONS ARE DEPICTED ON SHEET 5, SECTION "A-A" WALL MOUNT".
8. LINEAR INTERPOLATION IS ALLOWED FOR ALL GRAPHS, CHARTS, SCHEDULES, AND TABLES.
9. ALTERATIONS OR ADDITIONS TO THE DOCUMENT ARE NOT PERMITTED. DOCUMENT SHALL BEAR THE ORIGINAL SEAL, SIGNATURE, AND DATE OF THE PROFESSIONAL ENGINEER LISTED.
10. THIS PRODUCT APPROVAL IS SUITABLE FOR USE ONLY AS SPECIFICALLY STATED ON THE COMBINED PAGES OF THE ENTIRE DOCUMENT.

PRODUCT REVISED
as complying with the Florida
Building Code
Acceptance No 11-1118.04
Expiration Date 05/05/2016
By Helena A. Melon
Miami Dade Product Control

D.L. Fowler
Professional Engineer
Florida License No.
PE0050458

1-23-12

DRAWN:	DLF
DATE:	4-16-10
APPROVED:	DLF
DATE:	01-23-12
DRAWING NO:	3-01-038
SIZE: B	REV: A
SCALE:	3/8" = 1'-0"
SHEET:	1 OF 7

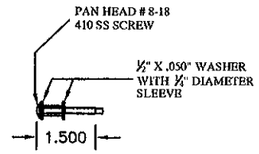

(AE) RETAIN SCREW ASSEBLY

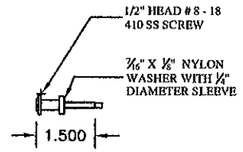

(AE) ALTERNATE RETAIN SCREW ASSEBLY

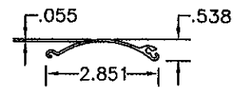

(A1) AL7-E SINGLE WALL SLAT
QMI- 395
ALUMINUM 6063-T6

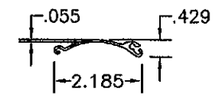

(A3) AL7-E SINGLE WALL STARTER SLAT
QMI- 477
ALUMINUM 6063-T6

2 PC. RAIL ASSEMBLY SCREW
#8-18 x 3/4 PHILLIPS PAN SDS 410 S.S.

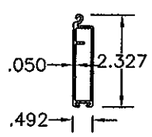

(C) BASE SLAT
QMI- 408
ALUMINUM 6005-T5

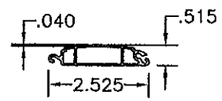

(B2) LOCK SLAT
QMI- 409
ALUMINUM 6005-T5

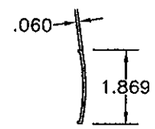

(B3) LOCK SLAT COVER
QMI-331
ALUMINUM 6005-T5

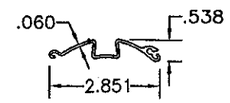

(B4) FINGER PULL SLAT
QMI- 410
ALUMINUM 6005-T5

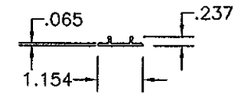

(B5) RAIL SNAP COVER
QMI-351
ALUMINUM 6063-T5

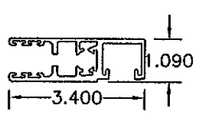

(E) SPRING STOP SNAP COVER
RETAIN RAIL
QMI- 487
ALUMINUM 6005-T5

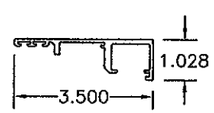

(E1) 2 PC. INNER HALF
SPRING STOP RETAIN RAIL
QMI- 488
ALUMINUM 6005-T5

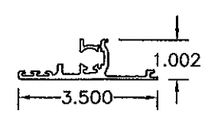

(E2) 2 PC. OUTER HALF
SPRING STOP RETAIN RAIL
QMI- 489
ALUMINUM 6005-T5

THIS TWO PIECE RAIL IS SECURED TOGETHER USING # 8-18 X 0.75" PHILLIP PH SDS SS SCREWS @ 5" O.C. MAXIMUM SPACING.

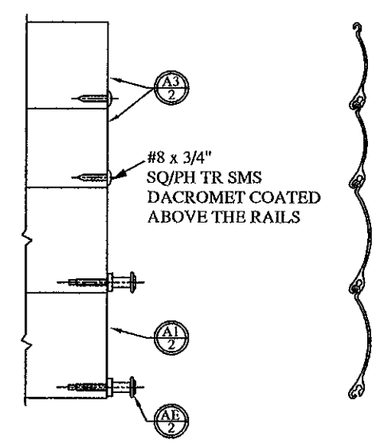

PRODUCT REVISED
as complying with the Florida
Building Code
Acceptance No 11-1118.04
Expiration Date 05/05/2016
By
Miami Dade Product Control

Roll-a-way By OMI
1661 GLENLAKE AVENUE
ITASCA, IL 60143
COPYRIGHT © 2006
QUALITAS MANUFACTURING INC.

DRAWING TITLE:
HVHZ
ROLL-UP WIND ABATEMENT
SYSTEM

D.L. Fowler
Professional Engineer
Florida Licence No.
PE0050458
1-23-12

DRAWN:	DLF
DATE:	4-16-10
APPROVED:	DLF
DATE:	4-16-10
DRAWING NO:	3-01-038
SIZE: B	REV:
SCALE:	1 : 4
SHEET:	2 OF 7

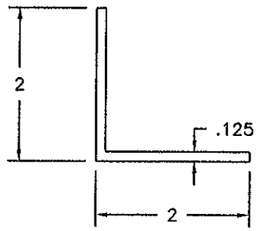

N1 2" x 2" x 1/8" ANGLE
6063-T5 ALLOY

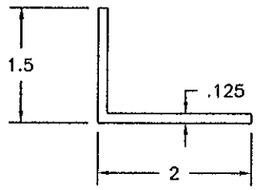

M1 1 1/2" x 2" x 1/8" ANGLE
6063-T5 ALLOY

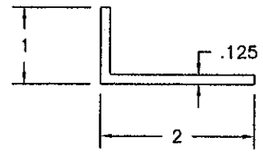

M2 1" x 2" x 1/8" ANGLE
6063-T5 ALLOY

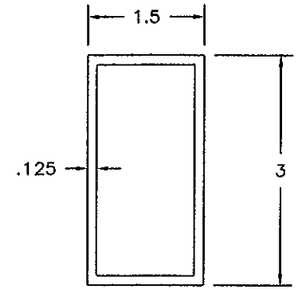

G2 1 1/2" x 3" TUBE
6063-T5 ALLOY

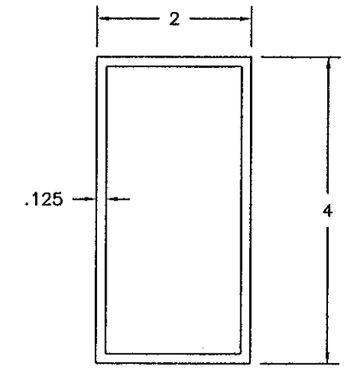

G1 2" x 4" TUBE
6063-T5 ALLOY

PRODUCT REVISED
as complying with the Florida
Building Code
Acceptance No 11-1118.04
Expiration Date 05/05/2016
By
Miami Dade Product Control

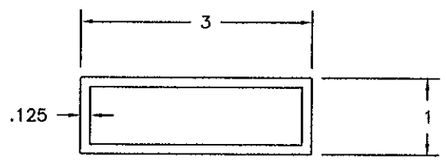

G TUBE 1" x 3" x .125"
ALUMINUM 6063-T6

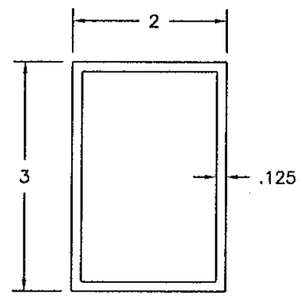

H TUBE 2" x 3" x 1/8"
ALUMINUM 6005-T5

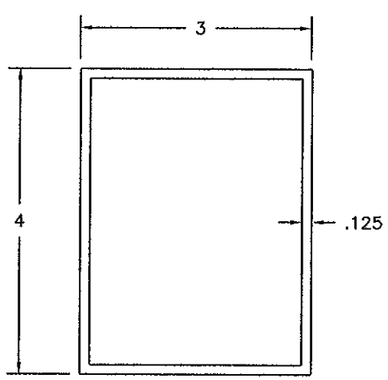

I TUBE 3" x 4" x 1/8"
ALUMINUM 6063-T6

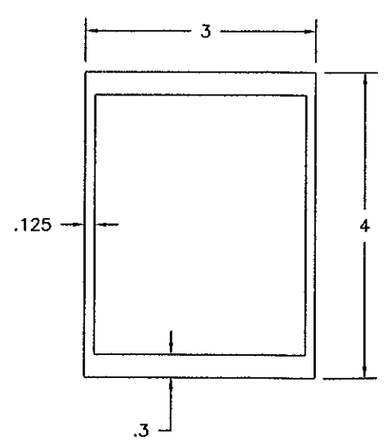

J TUBE 3" x 4" HEAVY DUTY
ALUMINUM 6005-T5

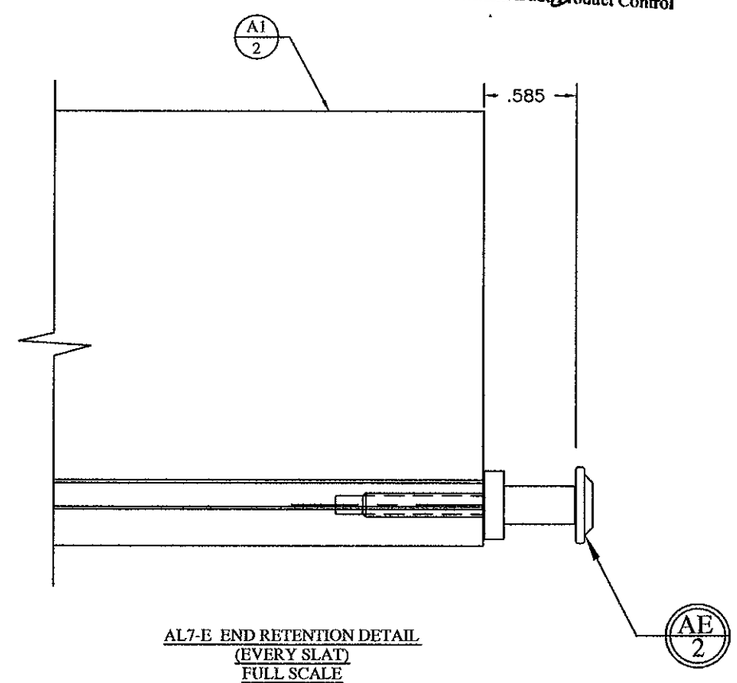

AL7-E END RETENTION DETAIL
(EVERY SLAT)
FULL SCALE

Note:
1. Angles and tubes may be used as roll shutter non structural sills and will be attached with $\frac{1}{4}$" x 1.75" tapcons at maximum 15" O.C..

Roll-a-way By OMI
1661 GLENLAKE AVENUE
ITASCA, IL 60143
COPYRIGHT © 2008
QUALITAS MANUFACTURING INC.

DRAWING TITLE:
HVHZ
ROLL-UP WIND ABATEMENT
SYSTEM

D.L. Fowler
Professional Engineer
Florida License No.
PE0050458

1-23-12

DRAWN:	DLF
DATE:	04-15-10
APPROVED:	DLF
DATE:	04-15-10
DRAWING NO:	3-01-038
SIZE: B	REV: -
SCALE:	1 : 2
SHEET:	3 OF 7

ALLOWABLE SLAT SPAN TABLE

P.S.F.	AL7-E	
10	233"	
15	233"	
20	233"	
25	233"	
30	233"	
35	233"	
40	223"	
45	212"	
50	202"	
55	192"	
60	182"	
65	172"	
70	162"	
75	152"	
80	142"	
85	132"	
90	122"	
95	112"	
100	102"	

REQUIRED GLASS CLEARANCE (INCHES)

PSF\SLAT SPAN	48			60			72"			84"			96"			108"			120"			132"			144"			156"			168"			180"			192"			204"			216"			228"			233"		
	SLAT TYPE			SLAT TYPE			SLAT TYPE			SLAT TYPE			SLAT TYPE			SLAT TYPE			SLAT TYPE			SLAT TYPE			SLAT TYPE			SLAT TYPE			SLAT TYPE			SLAT TYPE			SLAT TYPE			SLAT TYPE			SLAT TYPE			SLAT TYPE			SLAT TYPE		
	A	B	C	A	B	C	A	B	C	A	B	C	A	B	C	A	B	C	A	B	C	A	B	C	A	B	C	A	B	C	A	B	C	A	B	C	A	B	C	A	B	C	A	B	C	A	B	C	A	B	C	A	B	C
10	-	1.2	-	-	1.4	-	-	1.6	-	-	2.9	-	-	4.3	-	-	4.7	-	-	5.0	-	-	5.1	-	-	5.2	-	-	5.3	-	-	5.4	-	-	5.5	-	-	5.5	-	-	5.6	-	-	5.6	-	-	5.6	-	-	7.8	-
15	-	1.3	-	-	1.7	-	-	2.4	-	-	3.6	-	-	4.4	-	-	4.9	-	-	5.3	-	-	5.8	-	-	5.6	-	-	5.7	-	-	5.8	-	-	5.9	-	-	6.0	-	-	6.1	-	-	6.1	-	-	6.1	-	-	8.4	-
20	-	1.4	-	-	1.9	-	-	3.2	-	-	4.1	-	-	4.6	-	-	5.1	-	-	5.5	-	-	6.3	-	-	5.9	-	-	6.1	-	-	6.3	-	-	6.4	-	-	6.5	-	-	6.6	-	-	6.6	-	-	6.6	-	-	8.9	-
25	-	1.5	-	-	1.9	-	-	3.8	-	-	4.2	-	-	4.7	-	-	5.3	-	-	5.7	-	-	6.7	-	-	6.3	-	-	6.5	-	-	6.7	-	-	6.9	-	-	7.0	-	-	7.1	-	-	7.1	-	-	7.1	-	-	9.5	-
30	-	1.6	-	-	2.3	-	-	3.9	-	-	4.4	-	-	4.9	-	-	5.6	-	-	6.0	-	-	7.1	-	-	6.6	-	-	6.9	-	-	7.1	-	-	7.3	-	-	7.5	-	-	7.6	-	-	7.6	-	-	7.6	-	-	10.0	-
35	-	1.7	-	-	2.7	-	-	3.9	-	-	4.5	-	-	5.1	-	-	5.8	-	-	6.2	-	-	7.6	-	-	7.0	-	-	7.3	-	-	7.5	-	-	7.8	-	-	8.0	-	-	8.1	-	-	8.2	-	-	8.1	-	-	10.6	-
40	-	1.8	-	-	3.0	-	-	4.0	-	-	4.6	-	-	5.2	-	-	6.0	-	-	6.5	-	-	8.0	-	-	7.3	-	-	7.7	-	-	8.0	-	-	8.3	-	-	8.5	-	-	8.6	-	-	8.7	-	-	8.6	-	-	-	-
45	-	1.9	-	-	3.4	-	-	4.1	-	-	4.7	-	-	5.4	-	-	6.2	-	-	6.7	-	-	8.5	-	-	7.7	-	-	8.1	-	-	8.4	-	-	8.7	-	-	9.0	-	-	9.1	-	-	9.2	-	-	9.1	-	-	-	-
50	-	2.0	-	-	3.5	-	-	4.2	-	-	4.9	-	-	5.5	-	-	6.4	-	-	7.0	-	-	8.9	-	-	8.0	-	-	8.4	-	-	8.8	-	-	9.2	-	-	9.5	-	-	9.7	-	-	9.7	-	-	-	-	-	-	-
55	-	2.1	-	-	3.5	-	-	4.3	-	-	5.0	-	-	5.7	-	-	6.6	-	-	7.2	-	-	9.3	-	-	8.4	-	-	8.8	-	-	9.3	-	-	9.7	-	-	10.0	-	-	10.2	-	-	-	-	-	-	-	-	-	-	-
60	-	2.2	-	-	3.6	-	-	4.4	-	-	5.1	-	-	5.8	-	-	6.8	-	-	7.5	-	-	9.8	-	-	8.7	-	-	9.2	-	-	9.7	-	-	10.1	-	-	10.5	-	-	10.7	-	-	-	-	-	-	-	-	-	-	-
65	-	2.3	-	-	3.7	-	-	4.5	-	-	5.2	-	-	6.0	-	-	7.0	-	-	7.7	-	-	10.2	-	-	9.1	-	-	9.6	-	-	10.1	-	-	10.6	-	-	10.9	-	-	-	-	-	-	-	-	-	-	-	-	-	-
70	-	2.4	-	-	3.7	-	-	4.6	-	-	5.3	-	-	6.2	-	-	7.2	-	-	7.9	-	-	10.6	-	-	9.4	-	-	10.0	-	-	10.6	-	-	11.0	-	-	-	-	-	-	-	-	-	-	-	-	-	-	-	-	-
75	-	2.5	-	-	3.8	-	-	4.7	-	-	5.5	-	-	6.3	-	-	7.4	-	-	8.2	-	-	11.1	-	-	9.8	-	-	10.4	-	-	11.0	-	-	-	-	-	-	-	-	-	-	-	-	-	-	-	-	-	-	-	-
80	-	2.6	-	-	3.8	-	-	4.7	-	-	5.6	-	-	6.5	-	-	7.6	-	-	8.4	-	-	11.5	-	-	10.1	-	-	10.8	-	-	-	-	-	-	-	-	-	-	-	-	-	-	-	-	-	-	-	-	-	-	-
85	-	2.7	-	-	3.9	-	-	4.8	-	-	5.7	-	-	6.6	-	-	7.8	-	-	8.7	-	-	11.9	-	-	10.5	-	-	-	-	-	-	-	-	-	-	-	-	-	-	-	-	-	-	-	-	-	-	-	-	-	-
90	-	2.8	-	-	4.0	-	-	4.9	-	-	5.8	-	-	6.8	-	-	8.0	-	-	8.9	-	-	12.4	-	-	10.8	-	-	-	-	-	-	-	-	-	-	-	-	-	-	-	-	-	-	-	-	-	-	-	-	-	-
95	-	3.0	-	-	4.0	-	-	5.0	-	-	6.0	-	-	6.9	-	-	8.2	-	-	9.2	-	-	12.8	-	-	-	-	-	-	-	-	-	-	-	-	-	-	-	-	-	-	-	-	-	-	-	-	-	-	-	-	-
100	-	3.1	-	-	4.1	-	-	5.1	-	-	6.1	-	-	7.1	-	-	8.4	-	-	9.4	-	-	-	-	-	-	-	-	-	-	-	-	-	-	-	-	-	-	-	-	-	-	-	-	-	-	-	-	-	-	-	-

SLAT TYPE	
A	N/A
B	AL7-E
C	N/A

PRODUCT REVISED
as complying with the Florida
Building Code
Acceptance No 11-1118.04
Expiration Date 05/05/2016
By [signature]
Miami Dade Product Control

Roll-a-way By QMI
1661 GLENLAKE AVENUE
ITASCA, IL 60143
COPYRIGHT © 2008
QUALITAS MANUFACTURING INC.

DRAWING TITLE:

HVHZ ROLL-UP WIND ABATEMENT SYSTEM

D.L. Fowler
Professional Engineer
Florida License No.
PE0050458

1-23-12

DRAWN:	DLF
DATE:	04-16-10
APPROVED:	DLF
DATE:	04-16-10
DRAWING NO:	3-01-038
SIZE: B	REV: -
SCALE:	1/2" = 1'-0"
SHEET:	4 OF 7

NOMENCLATURE

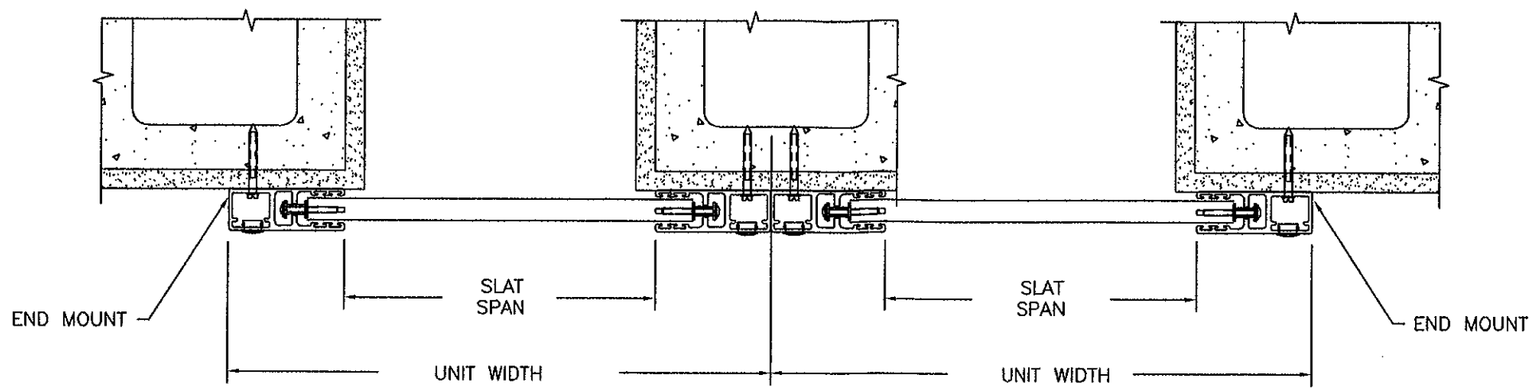

SECTION "A-A" (1)

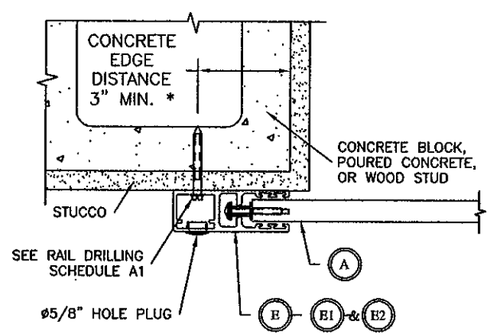

SECTION "A-A" (2)

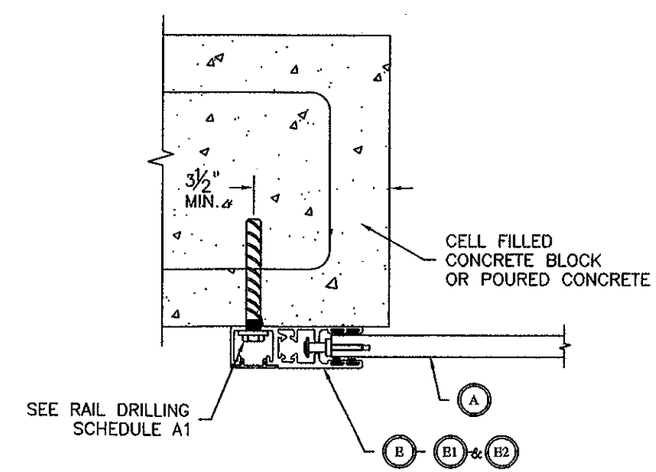

PRODUCT REVISED
as complying with the Florida Building Code
Acceptance No 11-1118.04
Expiration Date 05/05/2016
By
Miami Dade Product Control

Roll-a-way By OMI
1661 GLENLAKE AVENUE
ITASCA, IL 60143
COPYRIGHT © 2008
QUALITAS MANUFACTURING INC.

DRAWING TITLE:

HVHZ ROLL-UP WIND ABATEMENT SYSTEM

D.L. Fowler
Professional Engineer
Florida License No.
PE0050458

1-23-12

DRAWN:	DLF
DATE:	04-19-10
APPROVED:	DLF
DATE:	04-19-10
DRAWING NO:	3-01-038
SIZE: B	REV: -
SCALE:	1:4
SHEET:	5 OF 7

FASTENER DRILLING O.C. (INCHES) SCHEDULE A1

PSF\SLAT SPAN	48"					60"					72"					84"					96"				
	Fastener					Fastener					Fastener					Fastener					Fastener				
	A	B	C	D	E	A	B	C	D	E	A	B	C	D	E	A	B	C	D	E	A	B	C	D	E
10	3	3	3	8	8	3	3	3	8	8	3	3	3	8	8	3	3	3	8	8	3	3	3	8	8
15	3	3	3	8	8	3	3	3	8	8	3	3	3	8	8	3	3	3	8	8	3	3	3	8	8
20	3	3	3	8	8	3	3	3	8	8	3	3	3	8	8	3	3	3	8	8	3	3	3	8	8
25	3	3	3	8	8	3	3	3	8	8	3	3	3	8	8	3	3	3	8	8	3	3	3	8	8
30	3	3	3	8	8	3	3	3	8	8	3	3	3	8	8	3	3	3	8	8	3	3	3	8	8
35	3	3	3	8	8	3	3	3	8	8	3	3	3	8	8	3	3	3	8	8	3	3	3	8	8
40	3	3	3	8	8	3	3	3	8	8	3	3	3	8	8	3	3	3	8	8	3	3	3	8	8
45	3	3	3	8	8	3	3	3	8	8	3	3	3	8	8	3	3	3	8	8	3	3	3	8	8
50	3	3	3	8	8	3	3	3	8	8	3	3	3	8	8	3	3	3	8	8	3	3	3	8	8
55	3	3	3	8	8	3	3	3	8	8	3	3	3	8	8	3	3	3	8	8	3	3	3	7	8
60	3	3	3	8	8	3	3	3	8	8	3	3	3	8	8	3	3	3	8	8	-	3	3	7	8
65	3	3	3	8	8	3	3	3	8	8	3	3	3	8	8	3	3	3	8	8	-	3	3	6	8
70	3	3	3	8	8	3	3	3	8	8	3	3	3	8	8	-	3	3	7	8	-	3	3	6	8
75	3	3	3	8	8	3	3	3	8	8	3	3	3	8	8	-	3	3	7	8	-	3	3	6	8
80	3	3	3	8	8	3	3	3	8	8	3	3	3	8	8	-	3	3	6	8	-	3	3	-	8
85	3	3	3	8	8	3	3	3	8	8	3	3	3	7	8	-	3	3	6	8	-	-	3	-	8
90	3	3	3	8	8	3	3	3	8	8	-	3	3	7	8	-	3	3	6	8	-	-	3	-	8
95	3	3	3	8	8	3	3	3	8	8	-	3	3	7	8	-	3	3	6	8	-	-	3	-	8
100	3	3	3	8	8	3	3	3	8	8	-	3	3	6	8	-	-	3	-	8	-	-	3	-	8

PSF\SLAT SPAN	108"					120"					132"					144"					156"				
	Fastener					Fastener					Fastener					Fastener					Fastener				
	A	B	C	D	E	A	B	C	D	E	A	B	C	D	E	A	B	C	D	E	A	B	C	D	E
10	3	3	3	8	8	3	3	3	8	8	3	3	3	8	8	3	3	3	8	8	3	3	3	8	8
15	3	3	3	8	8	3	3	3	8	8	3	3	3	8	8	3	3	3	8	8	3	3	3	8	8
20	3	3	3	8	8	3	3	3	8	8	3	3	3	8	8	3	3	3	8	8	3	3	3	8	8
25	3	3	3	8	8	3	3	3	8	8	3	3	3	8	8	3	3	3	8	8	3	3	3	8	8
30	3	3	3	8	8	3	3	3	8	8	3	3	3	8	8	3	3	3	8	8	-	3	3	7	8
35	3	3	3	8	8	3	3	3	8	8	3	3	3	7	8	-	3	3	7	8	-	-	-	6	8
40	3	3	3	8	8	3	3	3	7	8	-	3	3	7	8	-	3	3	6	8	-	-	-	-	8
45	3	3	3	8	8	-	3	3	7	8	-	3	3	6	8	-	-	-	-	8	-	-	-	-	8
50	-	3	3	7	8	-	3	3	6	8	-	-	3	6	8	-	-	-	-	8	-	-	-	-	8
55	-	3	3	6	8	-	3	3	6	8	-	-	-	-	8	-	-	-	-	8	-	-	-	-	8
60	-	3	3	6	8	-	-	-	-	8	-	-	-	-	8	-	-	-	-	8	-	-	-	-	-
65	-	-	3	6	8	-	-	-	-	8	-	-	-	-	8	-	-	-	-	-	-	-	-	-	-
70	-	-	-	-	8	-	-	-	-	8	-	-	-	-	8	-	-	-	-	-	-	-	-	-	-
75	-	-	-	-	8	-	-	-	-	8	-	-	-	-	-	-	-	-	-	-	-	-	-	-	-
80	-	-	-	-	8	-	-	-	-	8	-	-	-	-	-	-	-	-	-	-	-	-	-	-	-
85	-	-	-	-	8	-	-	-	-	-	-	-	-	-	-	-	-	-	-	-	-	-	-	-	-
90	-	-	-	-	8	-	-	-	-	-	-	-	-	-	-	-	-	-	-	-	-	-	-	-	-
95	-	-	-	-	8	-	-	-	-	-	-	-	-	-	-	-	-	-	-	-	-	-	-	-	-
100	-	-	-	-	-	-	-	-	-	-	-	-	-	-	-	-	-	-	-	-	-	-	-	-	-

PSF\SLAT SPAN	168"					180"					192"					204"					216"					228"					233"				
	Fastener					Fastener					Fastener					Fastener					Fastener					Fastener					Fastener				
	A	B	C	D	E	A	B	C	D	E	A	B	C	D	E	A	B	C	D	E	A	B	C	D	E	A	B	C	D	E	A	B	C	D	E
10	3	3	3	8	8	3	3	3	8	8	3	3	3	8	8	3	3	3	8	8	3	3	3	8	8	3	3	3	8	8	3	3	3	8	8
15	3	3	3	8	8	3	3	3	8	8	3	3	3	8	8	3	3	3	8	8	3	3	3	8	8	3	3	3	8	8	3	3	3	7	8
20	3	3	3	8	8	3	3	3	8	8	3	3	3	7	8	-	3	3	7	8	-	3	3	6	8	-	3	3	6	8	.	3	3	6	8
25	3	3	3	7	8	-	3	3	7	8	-	3	3	6	8	-	-	3	6	8	-	-	-	6	8	-	-	-	6	8	.	-	-	6	8
30	-	-	-	6	8	-	-	-	6	8	-	-	-	6	8	-	-	-	6	8	-	-	-	6	8	-	-	-	6	8	.	-	-	6	8
35	-	-	-	6	8	-	-	-	6	8	-	-	-	6	8	-	-	-	6	8	-	-	-	6	8	-	-	-	6	8	.	-	-	6	8
40	-	-	-	-	8	-	-	-	-	8	-	-	-	-	8	-	-	-	-	-	-	-	-	-	-	-	-	-	-	-	.	-	-	-	-
45	-	-	-	-	8	-	-	-	-	8	-	-	-	-	-	-	-	-	-	-	-	-	-	-	-	-	-	-	-	-	.	-	-	-	-
50	-	-	-	-	8	-	-	-	-	-	-	-	-	-	-	-	-	-	-	-	-	-	-	-	-	-	-	-	-	-	.	-	-	-	-
55	-	-	-	-	-	-	-	-	-	-	-	-	-	-	-	-	-	-	-	-	-	-	-	-	-	-	-	-	-	-	.	-	-	-	-
60	-	-	-	-	-	-	-	-	-	-	-	-	-	-	-	-	-	-	-	-	-	-	-	-	-	-	-	-	-	-	.	-	-	-	-
65	-	-	-	-	-	-	-	-	-	-	-	-	-	-	-	-	-	-	-	-	-	-	-	-	-	-	-	-	-	-	.	-	-	-	-
70	-	-	-	-	-	-	-	-	-	-	-	-	-	-	-	-	-	-	-	-	-	-	-	-	-	-	-	-	-	-	.	-	-	-	-
75	-	-	-	-	-	-	-	-	-	-	-	-	-	-	-	-	-	-	-	-	-	-	-	-	-	-	-	-	-	-	.	-	-	-	-
80	-	-	-	-	-	-	-	-	-	-	-	-	-	-	-	-	-	-	-	-	-	-	-	-	-	-	-	-	-	-	.	-	-	-	-
85	-	-	-	-	-	-	-	-	-	-	-	-	-	-	-	-	-	-	-	-	-	-	-	-	-	-	-	-	-	-	.	-	-	-	-
90	-	-	-	-	-	-	-	-	-	-	-	-	-	-	-	-	-	-	-	-	-	-	-	-	-	-	-	-	-	-	.	-	-	-	-
95	-	-	-	-	-	-	-	-	-	-	-	-	-	-	-	-	-	-	-	-	-	-	-	-	-	-	-	-	-	-	.	-	-	-	-
100	-	-	-	-	-	-	-	-	-	-	-	-	-	-	-	-	-	-	-	-	-	-	-	-	-	-	-	-	-	-	.	-	-	-	-

FASTENER		Edge Distance	Min. Embedment	Substrate
A	1/4" Tapcon	1-1/2"	1-1/2"	Wood (fastener in center of stud)
B	1/4" Tapcon	3"	1-1/4"	CMU Hollow
C	1/4" Tapcon	3"	1-3/4"	4000 PSI Concrete or Cell Filled CMU
D	3/8" Wedge Bolt	3.5"	3.75"	4000 PSI Concrete or Cell Filled CMU
E	3/8" Wedge Bolt	5.25"	3.75"	4000 PSI Concrete or Cell Filled CMU

PRODUCT REVISED
as complying with the Florida
Building Code
Acceptance No 11-1118.04
Expiration Date 05/05/2016
By [signature]
Miami Dade Product Control

Roll-a-way By QMI
1661 GLENLAKE AVENUE
ITASCA, IL 60143
COPYRIGHT © 2006
QUALITAS MANUFACTURING INC.

DRAWING TITLE:
HVHZ
ROLL-UP WIND ABATEMENT
SYSTEM

D.L. Fowler
Professional Engineer
Florida License No.
PE0050458
[signature] 1-23-12

DRAWN:	DLF
DATE:	04-19-10
APPROVED:	DLF
DATE:	04-19-10
DRAWING NO:	3-01-038
SIZE: B	REV: -
SCALE:	1 : 4
SHEET:	6 OF 7

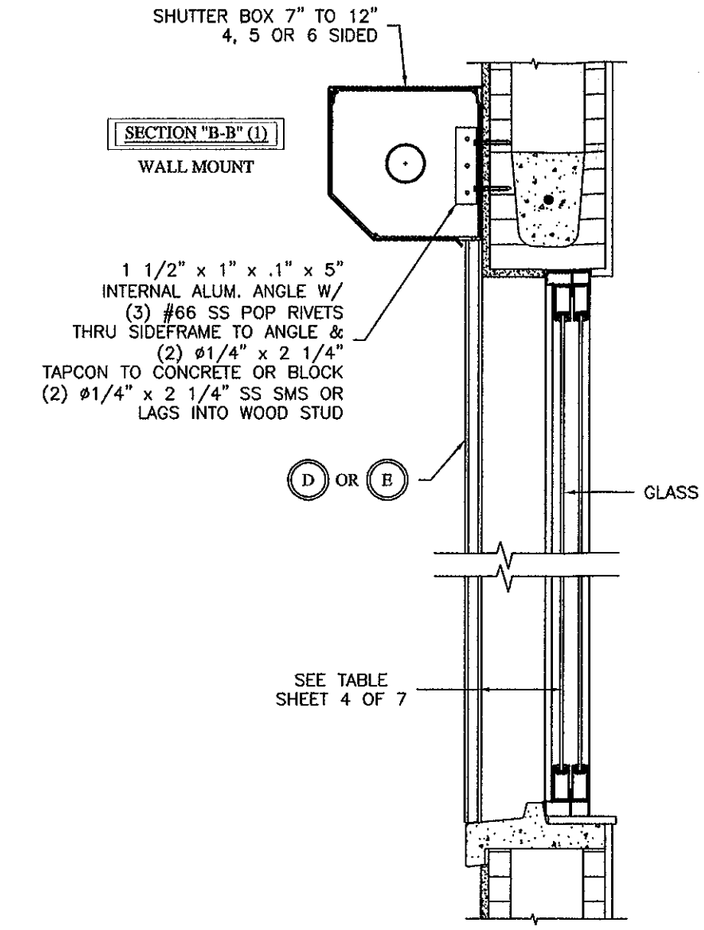

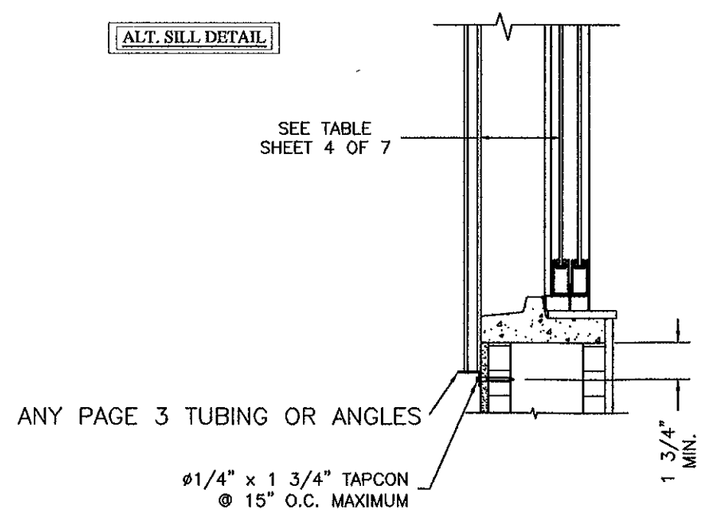

PRODUCT REVISED
as complying with the Florida
Building Code
Acceptance No 11-1118.04
Expiration Date 05/05/2016
By
Miami Dade Product Control

Roll-a-way
By QMI
1661 GLEN LAKE AVENUE
ITASCA, IL 60143
COPYRIGHT © 2006
QUALITAS MANUFACTURING INC.

DRAWING TITLE:
HVHZ
ROLL-UP WIND ABATEMENT
SYSTEM

D.L. Fowler
Professional Engineer
Florida License No.
PE0050458

1-23-12

DRAWN:	DF
DATE:	04-19-10
APPROVED:	DLF
DATE:	04-19-10
DRAWING NO:	3-01-038
SIZE: B	REV: -
SCALE:	1 : 10
SHEET:	7 OF 7