MIAMI-DADE COUNTY
DEPARTMENT OF PERMITTING, ENVIRONMENT, AND REGULATORY AFFAIRS (PERA)
BOARD AND CODE ADMINISTRATION DIVISION

MIAMI-DADE COUNTY
PRODUCT CONTROL SECTION
11805 SW 26 Street, Room 208
Miami, Florida 33175-2474
T (786) 315-2590 F (786) 315-2599
www.miamidade.gov/building

NOTICE OF ACCEPTANCE (NOA)

Florida Shutters, Inc.
1055 Commerce Avenue
Vero Beach, FL 32960

SCOPE:
This NOA is being issued under the applicable rules and regulations governing the use of construction materials. The documentation submitted has been reviewed and accepted by Miami-Dade County PERA-Product Control Section to be used in Miami Dade County and other areas where allowed by the Authority Having Jurisdiction (AHJ).

This NOA shall not be valid after the expiration date stated below. The Miami-Dade County Product Control Section (In Miami Dade County) and/or the AHJ (in areas other than Miami Dade County) reserve the right to have this product or material tested for quality assurance purposes. If this product or material fails to perform in the accepted manner, the manufacturer will incur the expense of such testing and the AHJ may immediately revoke, modify, or suspend the use of such product or material within their jurisdiction. PERA reserves the right to revoke this acceptance, if it is determined by Miami-Dade County Product Control Section that this product or material fails to meet the requirements of the applicable building code.

This product is approved as described herein, and has been designed to comply with the High Velocity Hurricane Zone of the Florida Building Code.

DESCRIPTION: "Impact" Aluminum Hinged Colonial Shutter

APPROVAL DOCUMENT: Drawing No. 08-FSH-0001, titled " Impact Aluminum Colonial Shutter ", sheets 1 through 8 of 8, prepared by Engineering Express, dated October 10, 2011, signed and sealed by Frank L. Bennardo, P.E., on October 11, 2011, bearing the Miami-Dade County Product Control Revision stamp with the Notice of Acceptance number and the expiration date by the Miami-Dade County Product Control Section.

MISSILE IMPACT RATING: Large and Small Missile Impact Resistant

LABELING: Each unit shall bear a permanent label with the manufacturer's name or logo, city, state, the following statement: "Miami-Dade County Product Control Approved", and NOA number, per TAS-201, TAS-202, and TAS-203, unless otherwise noted herein.

RENEWAL of this NOA shall be considered after a renewal application has been filed and there has been no change in the applicable building code negatively affecting the performance of this product.

TERMINATION of this NOA will occur after the expiration date or if there has been a revision or change in the materials, use, and/or manufacture of the product or process. Misuse of this NOA as an endorsement of any product, for sales, advertising or any other purposes shall automatically terminate this NOA. Failure to comply with any section of this NOA shall be cause for termination and removal of NOA.

ADVERTISEMENT: The NOA number preceded by the words Miami-Dade County, Florida, and followed by the expiration date may be displayed in advertising literature. If any portion of the NOA is displayed, then it shall be done in its entirety.

INSPECTION: A copy of this entire NOA shall be provided to the user by the manufacturer or its distributors and shall be available for inspection at the job site at the request of the Building Official.
This NOA **revises NOA #10-0209.14** and consists of this page 1, evidence submitted pages E-1, E-2, & E-3 as well as approval document mentioned above.
The submitted documentation was reviewed by **Helmy A. Makar, P.E., M.S.**

MIAMI-DADE COUNTY APPROVED

Helmy A. Makar
03/22/2012

NOA No. 11-1128.06
Expiration Date: 02/08/2015
Approval Date: 03/22/2012

Florida Shutters, Inc.

NOTICE OF ACCEPTANCE: EVIDENCE SUBMITTED

1. EVIDENCE SUBMITTED UNDER PREVIOUS APPROVAL #00-0411.09

A. DRAWINGS

1. *Drawing No. 1000A, titled " Impact Colonial Shutter ", prepared by W. W. Schaefer Engineering & Consulting, P.A., dated January 10, 2001, sheets 1 through 7 of 7, signed and sealed by Warren W. Schaefer, P.E.*

B. TESTS

1. *Test Report on: 1) Large Missile Impact Test, per PA-201*
   2) Cyclic Wind Pressure Test, per PA-203 and
   3) Uniform Static Air Pressure test per PA-202, of colonial shutters, prepared by Hurricane Test Laboratory Inc., Report No. ***0205-1201-99****, dated March 23, 2000, signed and sealed by Vinu J. Abraham, P.E.*

C. CALCULATIONS

1. *Anchor analysis and calculations dated 12/24/99, Pages 1 to 15, prepared by W. W. Schaefer Engineering & Consulting, P.A., signed and sealed by Warren W. Schaefer, P.E.*

D. MATERIAL CERTIFICATION

1. *Certified Tensile Test Report No. 0AM-142, prepared by QC Metallurgical Inc., dated 03/02/2000, per ASTM E8-93, signed and sealed by Frank Grate, P.E.*

2. EVIDENCE SUBMITTED UNDER PREVIOUS APPROVAL #04-0130.02

A. DRAWINGS

1. *Drawing No. 1000A, titled "Impact Colonial Shutters", sheets 1 through 7 of 7, prepared by W. W. Schaefer Engineering & Consulting, P.A., dated January 10, 2001, signed and sealed by Warren W. Schaefer, P.E. on March 18, 2004.*

B. TESTS

1. *None.*

C. CALCULATIONS

1. *None.*

D. QUALITY ASSURANCE

1. *By Miami-Dade County Building Code Compliance Office.*

E. MATERIAL CERTIFICATIONS

1. *None.*

Helmy A. Makar, P.E., M.S.
PERA, Product Control Unit Supervisor
NOA No. 11-1128.06
Expiration Date: 02/08/2015
Approval Date: 03/22/2012

NOTICE OF ACCEPTANCE: EVIDENCE SUBMITTED

3. EVIDENCE SUBMITTED UNDER PREVIOUS APPROVAL #09-0121.12

A. DRAWINGS

1. *Drawing No. 08-FSH-0001, titled " Impact Aluminum Colonial Shutter ", sheets 1 through 7 of 7, prepared by Engineering Express, dated November 21, 2008, signed and sealed by Frank L. Bennardo, P.E., on March 10, 2009.*

B. TESTS

1. *None.*

C. CALCULATIONS

1. *Anchor analysis and calculations dated 02/20/2009, Pages 1 through 21 of 21, prepared by Engineering Express, signed and sealed by Frank L. Bennardo, P.E., on 02/20/2009.*

D. QUALITY ASSURANCE

1. *By Miami-Dade County Building Code Compliance Office.*

E. MATERIAL CERTIFICATIONS

1. *None.*

4. EVIDENCE SUBMITTED UNDER PREVIOUS APPROVAL # 10-0209.14

A. DRAWINGS

1. *None.*

B. TESTS

1. *Test Report on: 1) Large Missile Impact Test, per PA-201*
   2) Cyclic Wind Pressure Test, per PA-203 and
   3) Uniform Static Air Pressure test per PA-202, of colonial shutters, prepared by Hurricane Test Laboratory Inc., Report No. ***0218-0203-09****, dated July 01, 2009, signed and sealed by Vinu J. Abraham, P.E.*

C. CALCULATIONS

1. *None.*

D. QUALITY ASSURANCE

1. *By Miami-Dade County Building Code Compliance Office.*

E. MATERIAL CERTIFICATIONS

1. *None.*

Helmy A. Makar, P.E., M.S.
PERA, Product Control Unit Supervisor
NOA No. 11-1128.06
Expiration Date: 02/08/2015
Approval Date: 03/22/2012

NOTICE OF ACCEPTANCE: EVIDENCE SUBMITTED

5. NEW EVIDENCE SUBMITTED

A. DRAWINGS

1. *Drawing No. 08-FSH-0001, titled " Impact Aluminum Colonial Shutter ", sheets 1 through 8 of 8, prepared by Engineering Express, dated October 10, 2011, signed and sealed by Frank L. Bennardo, P.E., on October 11, 2011.*

B. TESTS

1. *1. Test Report on: 1) Large Missile Impact Test, per PA-201*
   2) Cyclic Wind Pressure Test, per PA-203 and
   3) Uniform Static Air Pressure test per PA-202, of colonial shutters, prepared by Hurricane Test Laboratory Inc., Report No. ***0218-0203-09****, dated July 01, 2009, signed and sealed by Vinu J. Abraham, P.E.*

C. CALCULATIONS

1. *None.*

D. QUALITY ASSURANCE

1. *By Miami-Dade County Department of Permitting, Environment, and Regulatory Affairs (PERA).*

E. MATERIAL CERTIFICATIONS

1. *None.*

Helmy A. Makar, P.E., M.S.
PERA, Product Control Unit Supervisor
NOA No. 11-1128.06
Expiration Date: 02/08/2015
Approval Date: 03/22/2012

IMPACT ALUMINUM COLONIAL SHUTTER

FOR USE WITHIN AND OUTSIDE THE HIGH VELOCITY HURRICANE ZONE (HVHZ)

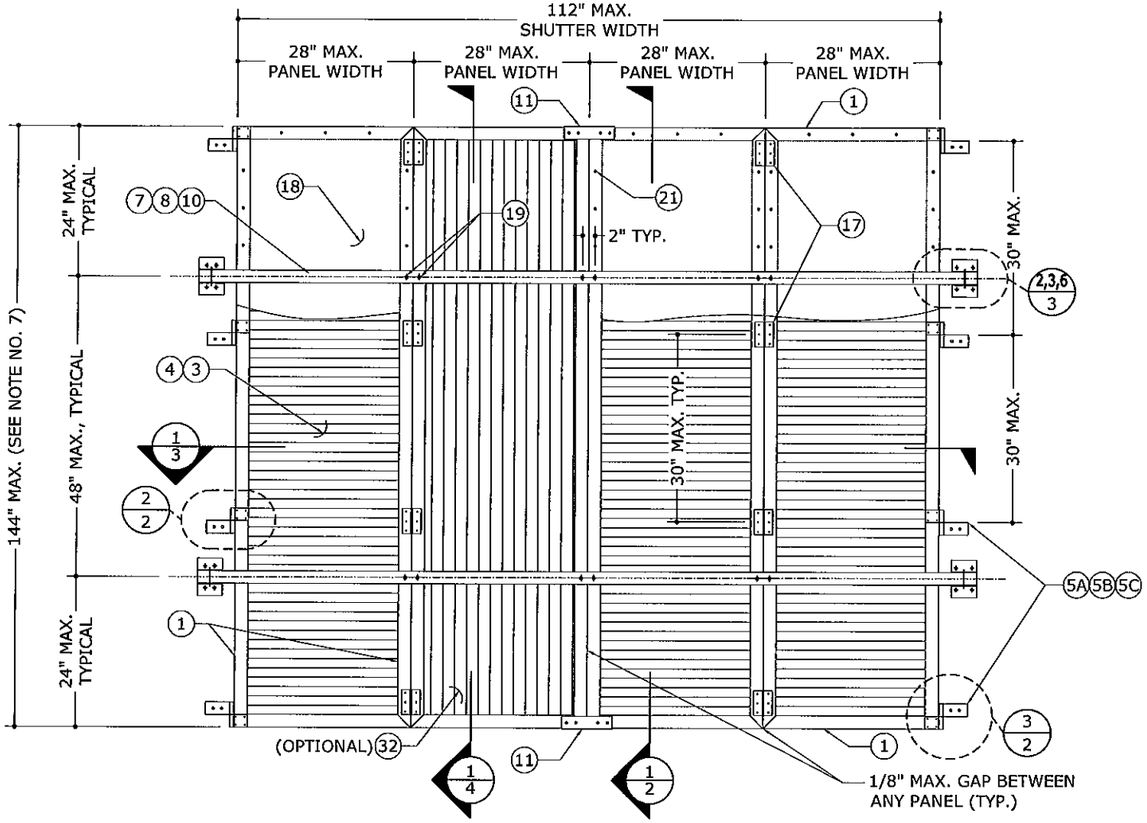

1/1 QUAD PANEL SHUTTER

N.T.S. EXTERIOR ELEV

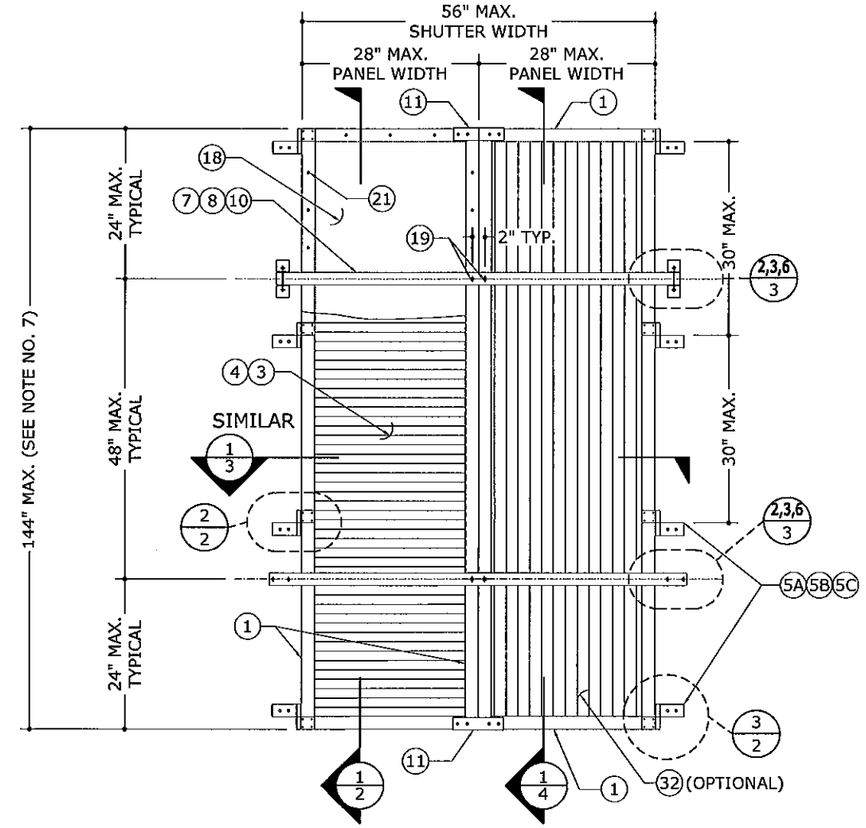

2/1 DOUBLE PANEL SHUTTER

N.T.S. EXTERIOR ELEV

GENERAL NOTES

1. THE SYSTEM DESCRIBED HEREIN HAS BEEN DESIGNED AND TESTED IN ACCORDANCE WITH THE 2007 AND 2010 EDITIONS OF THE FLORIDA BUILDING CODE, FOR USE WITHIN AND OUTSIDE THE HIGH VELOCITY HURRICANE ZONE, PER TAS 201 / 202 / 203.
2. NO 33-1/3% INCREASE IN ALLOWABLE STRESS HAS BEEN USED IN THE DESIGN OF THIS SYSTEM. WIND LOAD DURATION FACTOR Cd=1.6 HAS BEEN USED FOR WOOD ANCHOR DESIGN.
3. POSITIVE AND NEGATIVE DESIGN PRESSURES CALCULATED FOR USE WITH THIS SYSTEM SHALL BE DETERMINED BY OTHERS ON A JOB-SPECIFIC BASIS IN ACCORDANCE WITH THE GOVERNING CODE.
4. THE SYSTEM DETAILED HEREIN IS GENERIC AND DOES NOT PROVIDE INFORMATION FOR A SPECIFIC SITE. FOR SITE CONDITIONS DIFFERENT FROM THE CONDITIONS DETAILED HEREIN, A LICENSED ENGINEER OR REGISTERED ARCHITECT SHALL PREPARE SITE SPECIFIC DOCUMENTS FOR USE IN CONJUNCTION WITH THIS DOCUMENT.
5. PERMIT HOLDER SHALL VERIFY THE ADEQUACY OF THE EXISTING STRUCTURE TO WITHSTAND SUPERIMPOSED LOADS.
6. ALL EXTRUSIONS SHALL BE 6063-T5 ALUMINUM ALLOY, UNLESS NOTED OTHERWISE.
7. SHUTTER WIDTH SHALL BE RESTRICTED BY THE MAXIMUM DIMENSIONS SHOWN HEREIN. MAX SHUTTER HEIGHT MAY EXCEED 96" (UP TO 144" MAX) PROVIDED THAT THE MINIMUM STORM BAR SPACING INDICTATED HEREIN IS NOT EXCEEDED AND THE OPTIONAL 'TONGUE AND GROOVE BLADE' IS NOT UTILIZED (PART #32).
8. EACH SHUTTER ASSEMBLY SHALL BE PERMANENTLY LABELED ON THE BOTTOM, PLACED ON THE BACK OF THE SHUTTER WITH A MINIMUM OF THE FOLLOWING INFORMATION:
   - FLORIDA SHUTTERS, INC.
   - VERO BEACH, FLORIDA
   - TAS 201, 202, 203
   - MIAMI-DADE NOA NUMBER
9. ALL BOLTS & WASHERS SHALL BE ZINC COATED STEEL, GALVANIZED STEEL, OR STAINLESS STEEL WITH A MINIMUM TENSILE YIELD STRENGTH OF 60 KSI. ALL 3/16"Ø OR 1/4"Ø POP RIVETS SHALL BE 5052 ALUMINUM ALLOY OR STRONGER.
10. ALL STEEL IN CONTACT WITH ALUMINUM SHALL BE PAINTED OR PLATED AS PRESCRIBED IN THE ABOVE-NOTED BUILDING CODE.

PRODUCT REVISED
as complying with the Florida
Building Code
Acceptance No 11-1128.06
Expiration Date 02/08/2015
By
Miami Dade Product Control

SYSTEM NOTES

1. SINGLE & TRIPLE PANEL SHUTTERS ARE ALSO APPROVED CONFIGURATIONS. SINGLE PANEL SHUTTERS SHALL COMPLY WITH THE DOUBLE PANEL SHUTTER REQUIREMENTS & THE TRIPLE PANEL SHUTTERS SHALL COMPLY WITH THE QUAD PANEL SHUTTER REQUIREMENTS.
2. THE NUMBER OF STORM BARS REQUIRED FOR USE WITH THIS SYSTEM VARIES, DEPENDING ON REQUIRED SIZES AND DESIGN PRESSURES. SEE ELEVATIONS AND DESIGN SCHEDULES HEREIN FOR MINIMUM STORM BAR REQUIREMENTS AND LIMITATIONS.

MAXIMUM ALLOWABLE DESIGN PRESSURES:	-80.0 PSF +80.0 PSF

REFERENCE DESIGN SCHEDULES HEREIN FOR ADDITIONAL LIMITATIONS TO ALLOWABLE DESIGN PRESSURES, AS DETERMINED BY SHUTTER SPAN, STORM BAR CONFIGURATIONS, AND ANCHORAGE.

FRANK L. BENNARDO, P.E.
PE0046549
10/11/2011

ENGINEERING EXPRESS®
160 SW 12th AVENUE, #106
DEERFIELD BEACH, FL 33442
Ph: (954) 354-0660 Fax: (954) 354-0443
WWW.ENGEXP.COM
CERT OF AUTH #8685
A FRANK L. BENNARDO, P.E., INC. INNOVATION

FLORIDA SHUTTERS, INC.
1055 COMMERCE AVENUE
VERO BEACH, FL 32960
(772) 569 - 2200

"IMPACT" ALUMINUM COLONIAL SHUTTER
MIAMI-DADE NOTICE OF ACCEPTANCE

REMARKS	DRWN	CHKD	DATE
INIT ISSUE	KL	CL	11/21/08
ADD T&G BLADE	KL	FLB	08/05/09
2010 FBC	KL	FLB	10/10/11
-	-	-	-
-	-	-	-

08-FSH-0001
SCALE: - 03
PAGE DESCRIPTION:
-
-

8

1

F:\01 Project Files\Florida Shutters (FSH)\2008\08-FSH-0001 Colonial Shutter\08-FSH-0001_03a Impact Colonial Shutter (NOA).dwg
10/11/2011 - 11:34am keithl

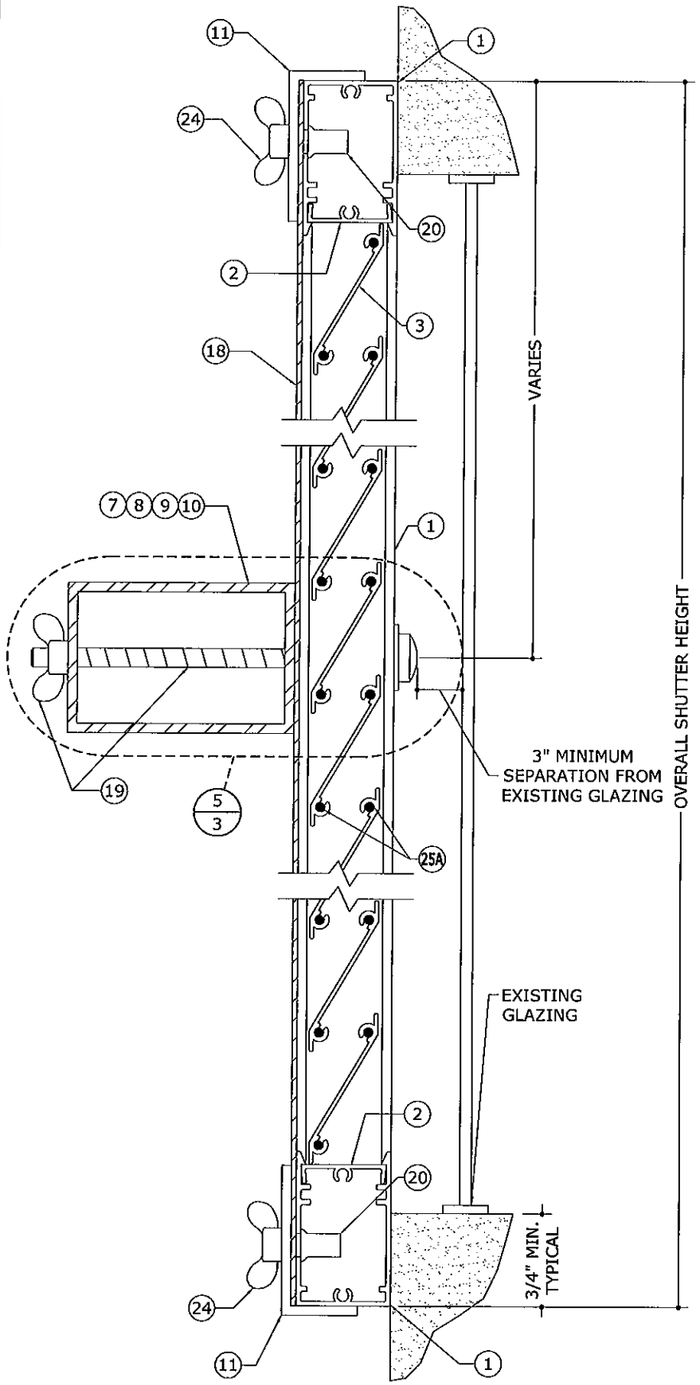

NOTE: ONLY ONE STORM BAR SHOWN FOR CLARITY

1/2 TYPICAL VERTICAL SECTION
6" = 1'-0" VERT. SECTION

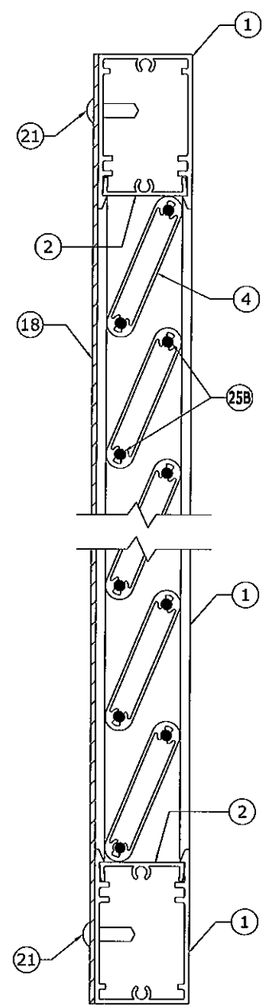

1A/2 ALT. VERTICAL SECTION WITH HOLLOW BLADE
6" = 1'-0" VERT. SECTION

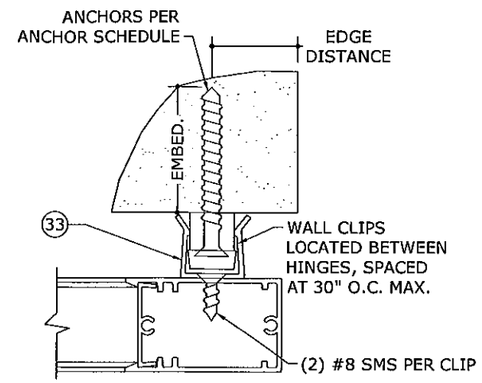

4/2 WALL CLIP DETAIL OPEN SHUTTER POSITION
6" = 1'-0" HORIZ. SECTION

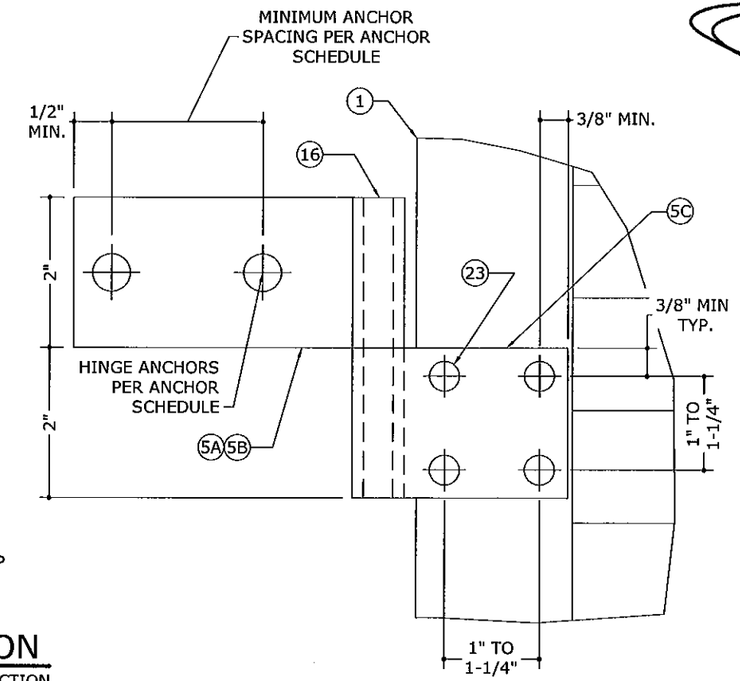

2/2 SIDE HINGE DETAIL
6" = 1'-0" EXTERIOR ELEV.

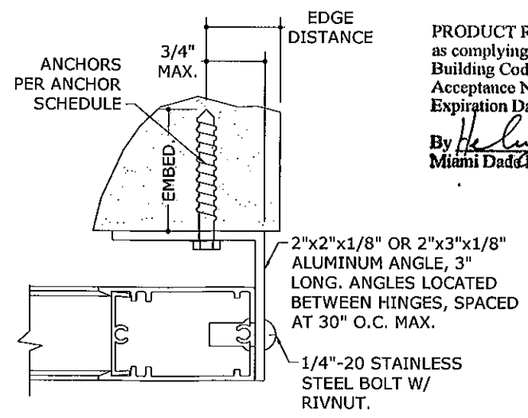

5/2 ALT. WALL CLIP DETAIL OPEN SHUTTER POSITION
6" = 1'-0" HORIZ. SECTION

PRODUCT REVISED
as complying with the Florida Building Code
Acceptance No 11-1128.06
Expiration Date 02/08/2015
By
Miami Dade Product Control

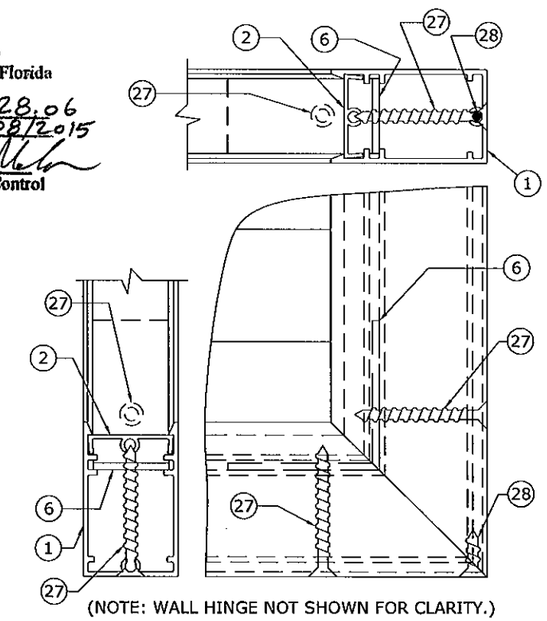

(NOTE: WALL HINGE NOT SHOWN FOR CLARITY.)

3/2 FRAME CORNER DETAIL
6" = 1'-0" ORTHOGRAPHIC

FRANK L. BENNARDO, P.E.
PE0046549
10/11/2011

ENGINEERING EXPRESS®
160 SW 12th AVENUE, #106
DEERFIELD BEACH, FL 33442
Ph: (954) 354-0660 FAX: (954) 354-0443
WWW.ENGEXP.COM
CERT OF AUTH #8685
A. FRANK L. BENNARDO, P.E., INC. INNOVATION

FLORIDA SHUTTERS, INC.
1055 COMMERCE AVENUE
VERO BEACH, FL 32960
(772) 569 - 2200

"IMPACT" ALUMINUM COLONIAL SHUTTER
MIAMI-DADE NOTICE OF ACCEPTANCE

REMARKS	DRWN	CHKD	DATE
INIT ISSUE	KL	CL	11/21/08
ADD T&G BLADE	KL	FLB	08/05/09
2010 FBC	KL	FLB	10/10/11
-	-	-	-
-	-	-	-

08-FSH-0001
SCALE: - 03
PAGE DESCRIPTION:
-
-

8

2

F:\01 Project Files\Florida Shutters (FSH)\2008\08-FSH-0001 Colonial Shutter(08-FSH-0001_03a Impact Colonial Shutter (NOA).dwg
10/11/2011 - 11:34am keithl

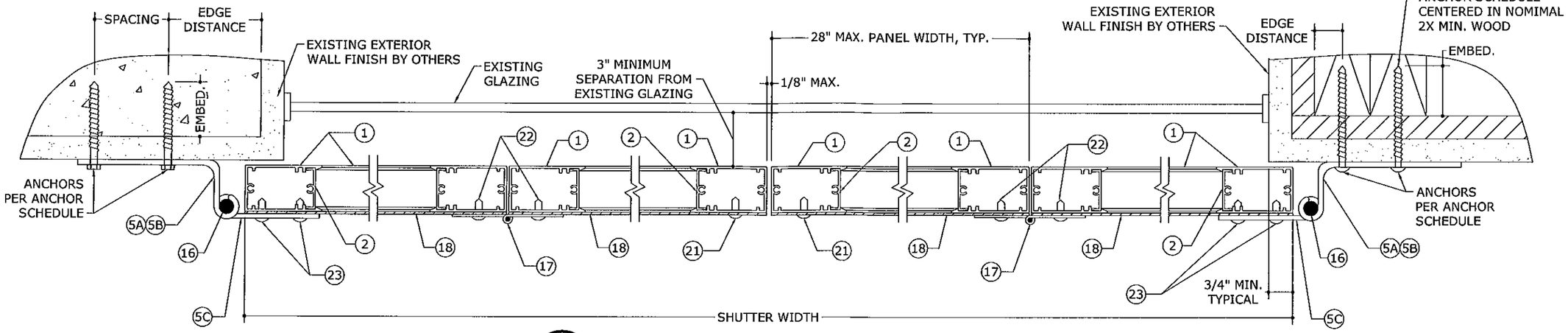

1/3 TYPICAL HORIZONTAL SECTION

4" = 1'-0" HORIZ. SECTION

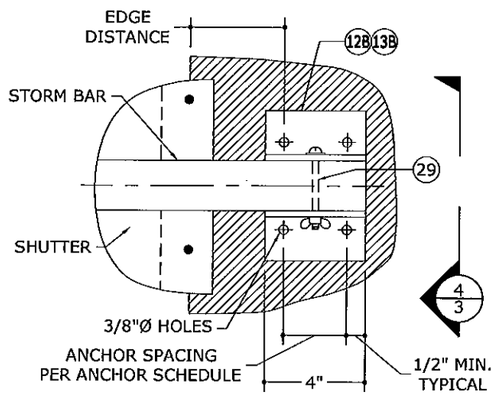

2/3 STORM BAR CONNECTION TYPE 'A'

2" = 1'-0" EXTERIOR ELEV

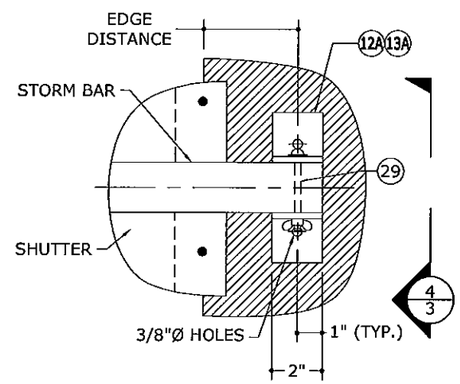

3/3 STORM BAR CONNECTION TYPE 'B'

2" = 1'-0" EXTERIOR ELEV

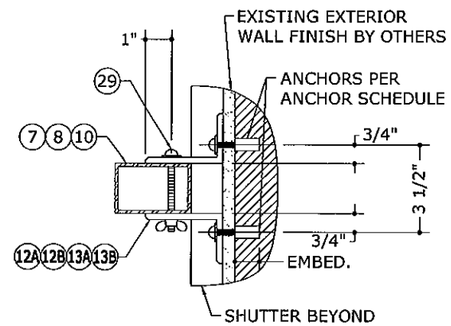

4/3 STORM BAR CONNECTION SECTION

2" = 1'-0" VERT SECTION

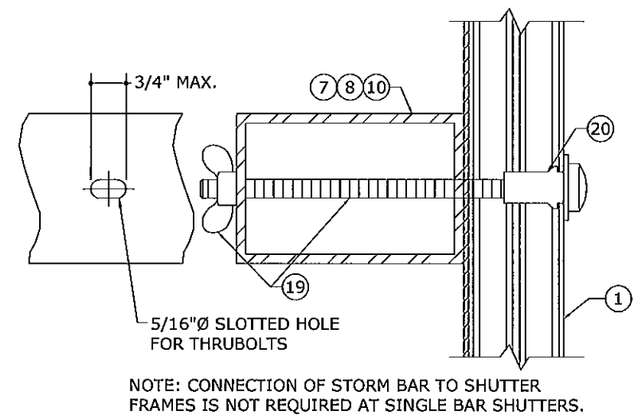

NOTE: CONNECTION OF STORM BAR TO SHUTTER FRAMES IS NOT REQUIRED AT SINGLE BAR SHUTTERS.

5/3 STORM BAR TO FRAME CONNECTION DETAIL

6" = 1'-0" VERT SECTION

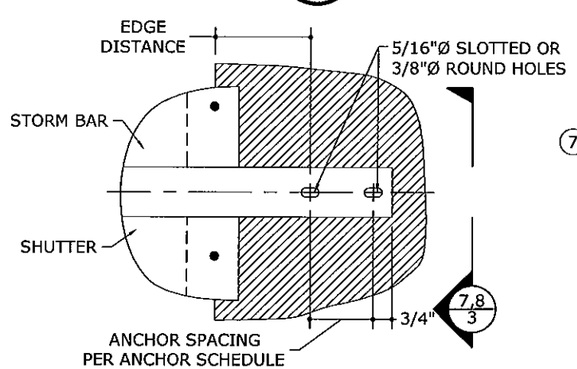

6/3 STORM BAR CONNECTION TYPE 'C'

2" = 1'-0" EXTERIOR ELEV

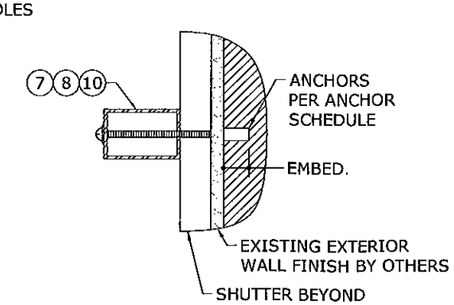

7/3 STORM BAR CONNECTION SECTION

2" = 1'-0" VERT SECTION

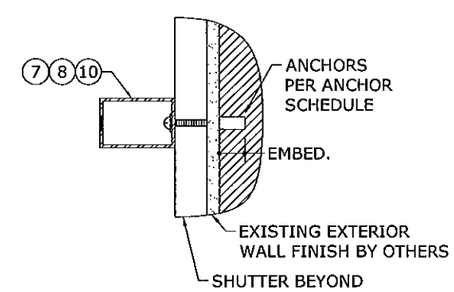

8/3 ALT. STORM BAR CONNECTION SECTION

2" = 1'-0" VERT SECTION

PRODUCT REVISED
as complying with the Florida Building Code
Acceptance No 11-1128.06
Expiration Date 02/08/2015
By Helena A. Martin
Miami Dade Product Control

FRANK L. BENNARDO, P.E. #PE0046549
10/11/2011
ENGINEERING EXPRESS®
160 SW 12th AVENUE, #106
DEERFIELD BEACH, FL 33442
Ph: (954) 354-0660 Fax: (954) 354-0443
WWW.ENGEXP.COM
CERT OF AUTH #8985
A. FRANK L. BENNARDO, P.E., INC. INNOVATION

FLORIDA SHUTTERS, INC.
1055 COMMERCE AVENUE
VERO BEACH, FL 32960
(772) 569 - 2200

"IMPACT" ALUMINUM COLONIAL SHUTTER
MIAMI-DADE NOTICE OF ACCEPTANCE

REMARKS	DRWN	CHKD	DATE
INIT ISSUE	KL	CL	11/21/08
ADD T&G BLADE	KL	FLB	08/05/09
2010 FBC	KL	FLB	10/10/11

08-FSH-0001
SCALE: - 03
PAGE DESCRIPTION:
-
-

8

3

F:\01 Project Files\Florida Shutters (FSH)\2008\08-FSH-0001 Colonial Shutter\08-FSH-0001_03a Impact Colonial Shutter (NOA).dwg
10/11/2011 - 11:34am keithl

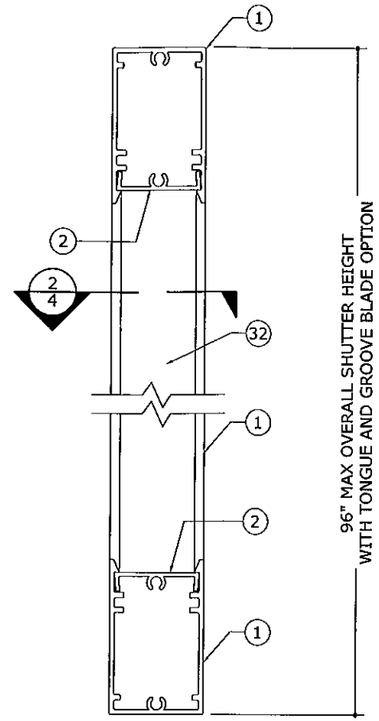

1/4 ALT. VERTICAL SECTION WITH TONGUE AND GROOVE BLADE

6" = 1'-0" VERT. SECTION

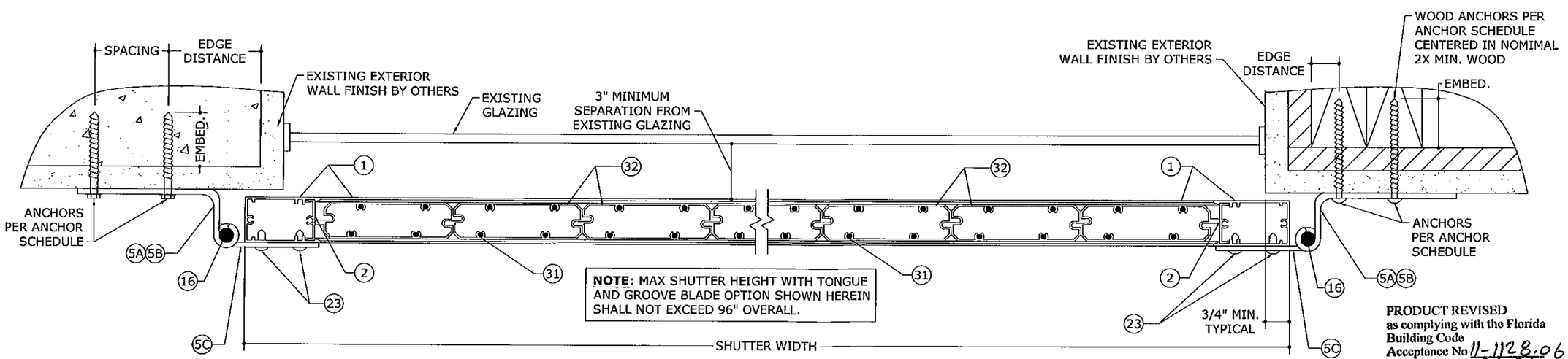

2/4 ALT. HORIZONTAL SECTION WITH TONGUE AND GROOVE BLADES

4" = 1'-0" HORIZ. SECTION

PRODUCT REVISED
as complying with the Florida Building Code
Acceptance No 11-1128.06
Expiration Date 02/08/2015
By Helena A. Molina
Miami Dade Product Control

FRANK L. BENNARDO, P.E.
PE0046549
10/11/2011

ENGINEERING EXPRESS®
160 SW 12th AVENUE, #106
DEERFIELD BEACH, FL 33442
Ph: (954) 354-0660 Fax: (954) 354-0443
WWW.ENGEXP.COM
CERT OF AUTH #8985
A. FRANK L. BENNARDO, P.E., INC. INNOVATION

FLORIDA SHUTTERS, INC.
1055 COMMERCE AVENUE
VERO BEACH, FL 32960
(772) 569 - 2200

"IMPACT" ALUMINUM COLONIAL SHUTTER
MIAMI-DADE NOTICE OF ACCEPTANCE

REMARKS	DRWN	CHKD	DATE
INIT ISSUE	KL	CL	11/21/06
ADD T&G BLADE	KL	FLB	08/05/09
2010 FBC	KL	FLB	10/10/11

08-FSH-0001
SCALE: - 03
PAGE DESCRIPTION:

8

4

F:\01 Project Files\Florida Shutters (FSH)\2008\08-FSH-0001 Colonial Shutter\08-FSH-0001_03a Impact Colonial Shutter (NOA).dwg
10/11/2011 - 11:34am keithl

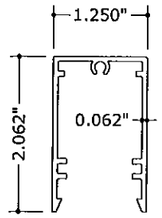

1 FRAME
6063-T6 ALUM.

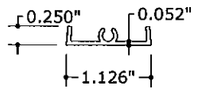

2 FRAME CAP
6063-T6 ALUM.

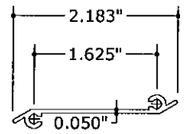

3 Z-BLADE
6063-T6 ALUM.

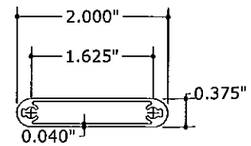

4 HOLLOW BLADE
6063-T6 ALUM.

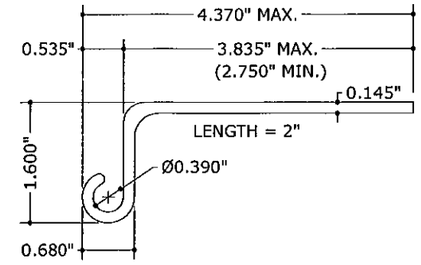

5A WALL HINGE 1
6005-T5 ALUM.

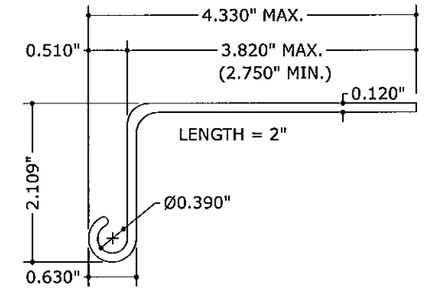

5B WALL HINGE 2
6005-T5 ALUM.

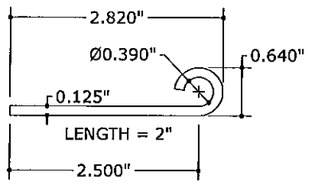

5C FLAT WALL HINGE
6005-T5 ALUM.

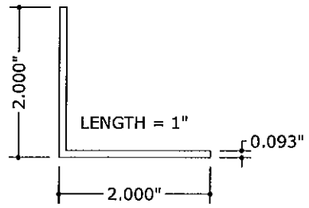

6 FRAME CORNER KEY
6063-T5 ALUM.

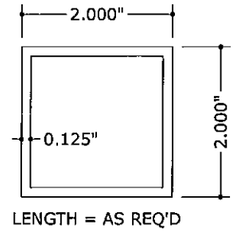

7 STORM BAR 'A'
6061-T6 OR 6005-T5 ALUM.

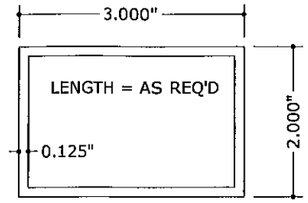

8 STORM BAR 'B'
6061-T6 OR 6005-T5 ALUM.

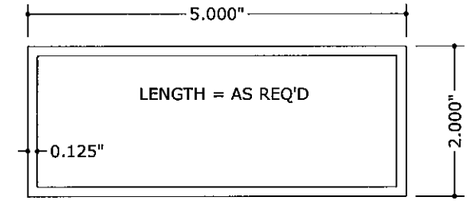

10 STORM BAR 'C'
6061-T6 OR 6005-T5 ALUM.

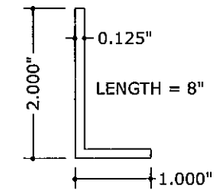

11 HURRICANE CLIP
6063-T5 ALUM.

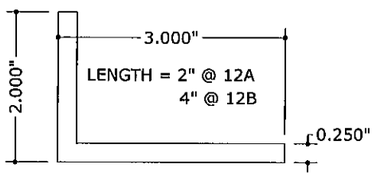

12A 12B STORM BAR CONNECTION ANGLE
6063-T5 ALUM.

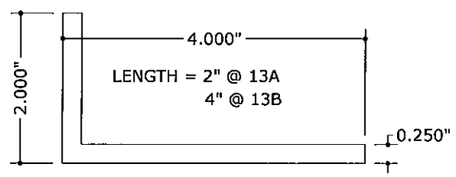

13A 13B STORM BAR CONNECTION ANGLE
6063-T5 ALUM.

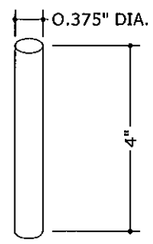

16 HINGE PIN
6063-T5 ALUM.

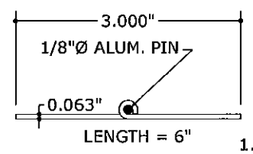

17 PANEL HINGE
6063-T5 ALUM.

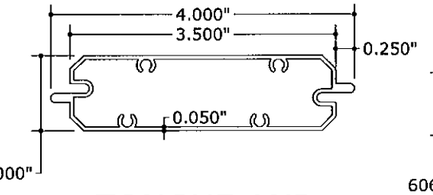

32 TONGUE AND GROOVE BLADE
6063-T5 ALUM.

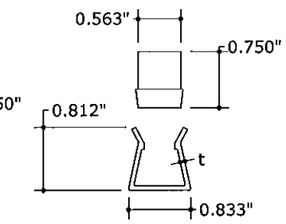

6063-T5 ALUMINUM "t" = 0.035"
NYLON "t" = 0.090"

33 WALL CLIP
NYLON OR 6063-T5 ALUM.

BILL OF MATERIALS

NO.	DESCRIPTION	NOTES	NO.	DESCRIPTION	NOTES
1	SHUTTER FRAME	6063-T6 ALUMINUM	17	SHUTTER PANEL HINGE	6063-T5 ALUMINUM, 6" LONG PIANO HINGE
2	FRAME CAP	6063-T6 ALUMINUM	18	0.050" THICK ALUMINUM HURRICANE SHEET	3003-H14 ALUMINUM, CUT TO FRAME SIZE
3	Z-BLADE	6063-T6 ALUMINUM	19	1/4" THRUBOLT OR THREADED ROD W/ WINGNUT	NOT REQ'D AT SINGLE BAR SHUTTERS
4	HOLLOW BLADE	6063-T6 ALUMINUM	20	1/4" MOLLY JACK NUT OR 6061-T6 RIVNUT	FOR HURRICANE CLIP BOLTS & STORM BAR THRUBOLTS
5A	WALL HINGE TYPE 1	6005-T5 ALUMINUM, USED WITH SINGLE PANELS	21	3/16" 5052 ALUMINUM POP RIVETS	POSITIONS AT FRAME CORNERS & 6" MAX O.C.
5B	WALL HINGE TYPE 2	6005-T5 ALUMINUM, USED WITH DOUBLE HINGED PANELS	22	#6x5/8" SS SMS SCREWS	6 PER PIANO HINGE (3 PER LEAF)
5C	FLAT WALL HINGE	6005-T5 ALUMINUM, FASTENS TO SHUTTER FRAME	23	#6x5/8" SS SMS SCREWS	4 PER WALL HINGE INTO SHUTTER FRAME
6	2"x2"x0.093" FRAME CORNER KEY	6063-T5 ALUMINUM, PLACED AT EACH FRAME CORNER	24	1/4"x1" STEEL BOLT OR WING BOLT	4 PER HURRICANE CLIP INTO SHUTTER RIVNUTS
7	2"x2"x1/8" STORM BAR	6061-T6 OR 6005-T5 ALUMINUM	25A	#6x5/8" SS P.H. SMS	SECURES Z-BLADE END TO FRAME CAP (2 PER BLADE END)
8	2"x3"X1/8" STORM BAR	6061-T6 OR 6005-T5 ALUMINUM	25B	#8x5/8" SS P.H. SMS	HOLLOW BLADE END TO FRAME CAP (2 PER BLADE END)
9	NOT USED		26A	NOT USED	
10	2"x5"X1/8" STORM BAR	6061-T6 OR 6005-T5 ALUMINUM	26B	NOT USED	
11	2"x1"x1/8" HURRICANE CLIP, 8" LONG	6063-T5 ALUMINUM, LOCKS SHUTTERS CLOSED	27	#6x1-3/4" SS F.H. SMS	2 PER FRAME CORNER INTO CORNER KEY
12A	2"x3"x1/4" STORM BAR END CONNECTOR	6063-T5 ALUMINUM, 2" LONG	28	#6x5/8" SS F.H. SMS	1 PER FRAME CORNER INTO FRAME SCREW BOSS
12B	2"x3"x1/4" STORM BAR END CONNECTOR	6063-T5 ALUMINUM, 4" LONG	29	1/4"x3" MIN BOLT W/ WING NUT	1 PER STORM BAR END THROUGH END ANGLES & BAR
13A	2"x4"x1/4" STORM BAR END CONNECTOR	6063-T5 ALUMINUM, 2" LONG	30A	NOT USED	
13B	2"x4"x1/4" STORM BAR END CONNECTOR	6063-T5 ALUMINUM, 4" LONG	30B	NOT USED	
14	NOT USED		31	#6X5/8" SS FLAT HEAD SMS	TONGUE AND GROOVE END TO FRAME CAP (4 PER BLADE END)
15	NOT USED		32	TONGUE AND GROOVE BLADE	6063-T5 ALUMINUM
16	3/8" DIA. X 4" LONG HINGE PIN	6063-T5 ALUMINUM	33	6063-T6 ALUMINUM OR NYLON WALL CLIP	ONE BETWEEN EACH WALL HINGE (31" O.C. MAX)

PRODUCT REVISED
as complying with the Florida Building Code
Acceptance No 11-1128.06
Expiration Date 02/08/2015
By Helena A. Mel
Miami Dade Product Control

FRANK L. BENNARDO, P.E.
#PE0046549
10/11/2011

ENGINEERING EXPRESS®
160 SW 12th AVENUE, #106
DEERFIELD BEACH, FL 33442
Ph: (954) 354-0660 Fax: (954) 354-0443
WWW.ENGEXP.COM
CERT OF AUTH #8685
A. FRANK L. BENNARDO, P.E., INC. INNOVATION

FLORIDA SHUTTERS, INC.
1055 COMMERCE AVENUE
VERO BEACH, FL 32960
(772) 569 - 2200

"IMPACT" ALUMINUM COLONIAL SHUTTER
MIAMI-DADE NOTICE OF ACCEPTANCE

REMARKS	DRWN	CHKD	DATE
INIT ISSUE	KL	CL	11/2/08
ADD T&G BLADE	KL	FLB	08/05/09
2010 FBC	KL	FLB	10/10/11
.	.	.	.
.	.	.	.

08-FSH-0001
SCALE: - 03
PAGE DESCRIPTION:
-
-

8

5

10/11/2011 - 11:34am keithl F:\01 Project Files\Florida Shutters (FSH)\2008\08-FSH-0001 Colonial Shutter\08-FSH-0001_03a Impact Colonial Shutter (NOA).dwg

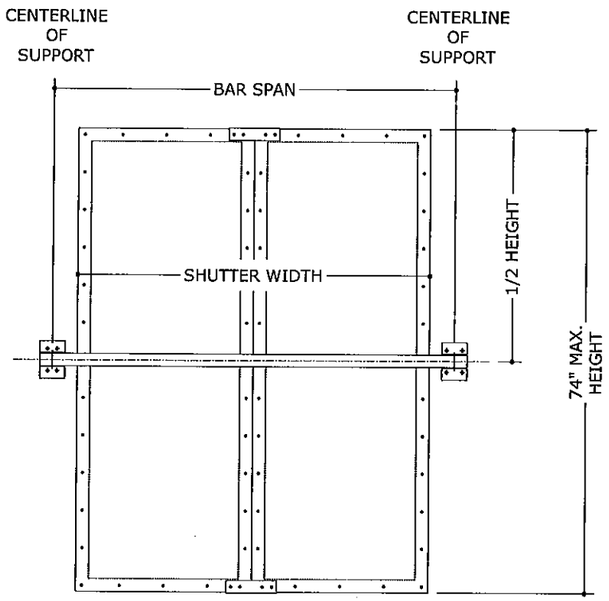

SINGLE BAR

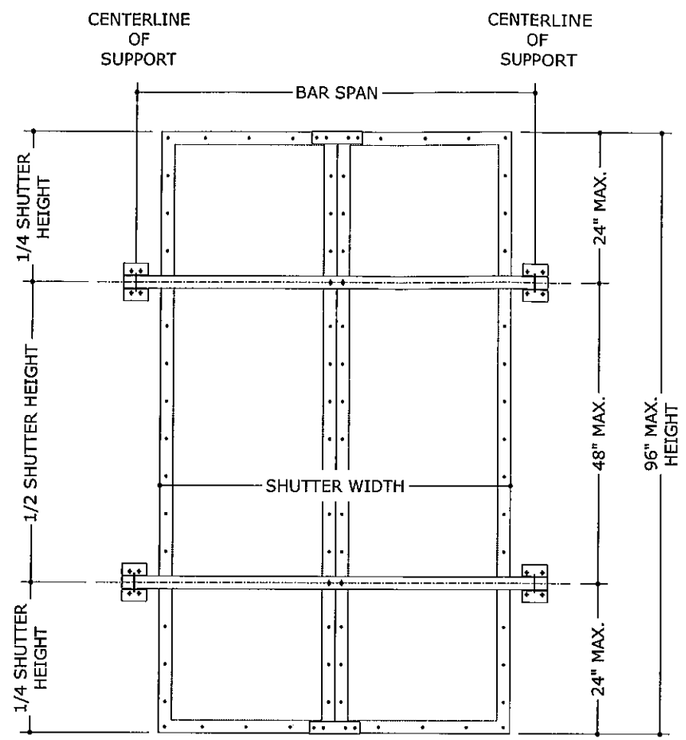

TWO BARS

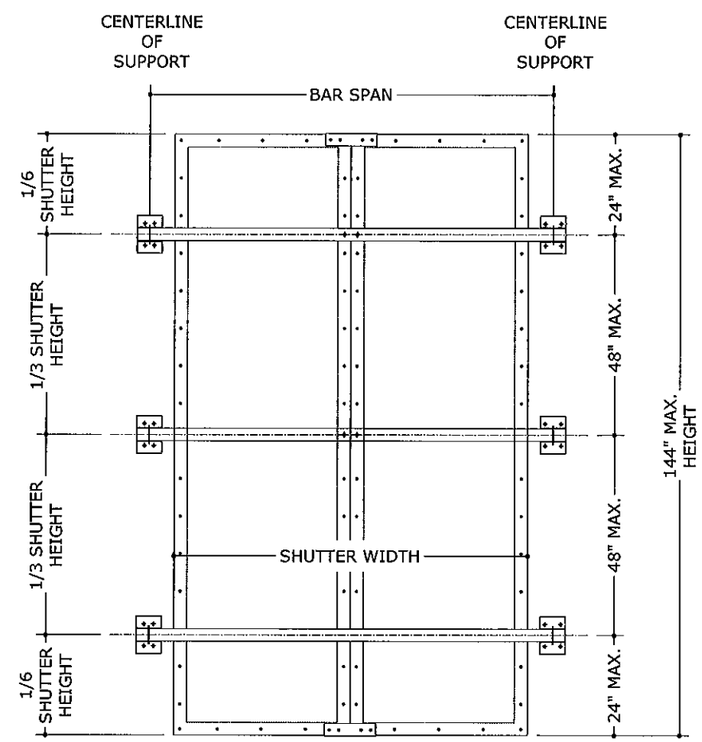

THREE BARS

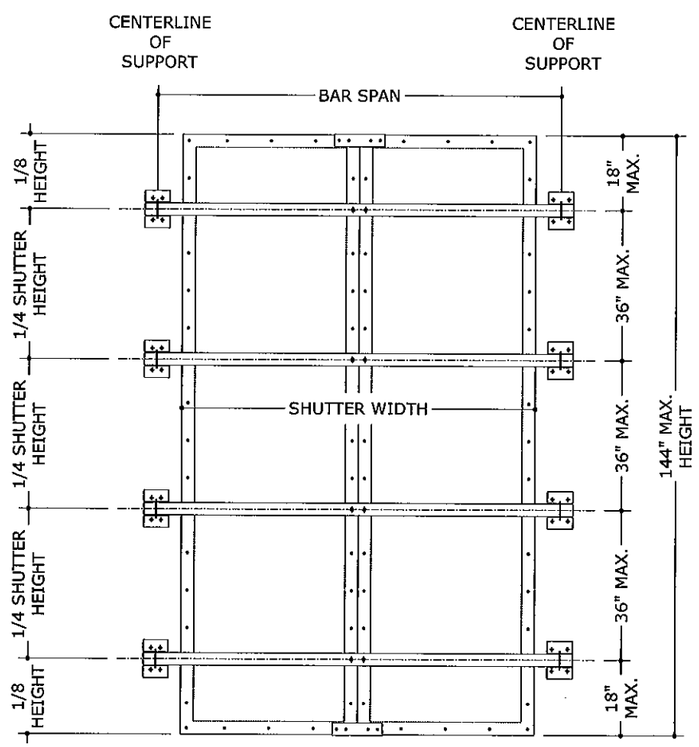

FOUR BARS

TABLE 1: SINGLE STORM BAR SHUTTER DESIGN SCHEDULE

SHUTTER HEIGHT	ALLOWABLE DESIGN PRESSURE (PSF)	
	POSITIVE	NEGATIVE
UP TO 54"	80.0 psf	80.0 psf
56"	76.1 psf	76.1 psf
58"	71.0 psf	71.0 psf
60"	66.3 psf	64.3 psf
62"	62.1 psf	58.3 psf
64"	58.3 psf	53.0 psf
66"	54.8 psf	48.3 psf
68"	51.6 psf	44.2 psf
70"	47.5 psf	40.5 psf
72"	42.4 psf	37.2 psf
74"	38.0 psf	34.3 psf

PRODUCT REVISED
as complying with the Florida Building Code
Acceptance No 11-1128.06
Expiration Date 02/08/2015
By Helena A. Melo
Miami Dade Product Control

NOTE:
1. MINIMUM SEPARATION FROM GLASS FOR ALL SHUTTER CONFIGURATIONS SHALL BE 3" MIN.
2. MAXIMUM BAR SPAN AS DENOTED HEREIN SHALL NOT BE MORE THAN 10" LONGER THAN SHUTTER WIDTH.
3. TABLE 1 SHALL ONLY BE USED FOR SINGLE STORM BAR SHUTTERS WITH 74" MAX HEIGHT. SINGLE STORM BAR SHUTTERS MAY HAVE 1, 2, 3, OR 4 PANELS.
4. REFERENCE STORM BAR DESIGN SCHEDULES FOR ADDITIONAL LIMITATIONS TO DESIGN PRESSURES AS GOVERNED BY STORM BARS AND STORM BAR CONNECTIONS.

ANCHOR SCHEDULE:

WALL CLIP ANCHORS:
- (2) 1/4" CARBON STEEL TAPCONS (ITW) THRU WOOD BUCKS OR DIRECTLY INTO MASONRY/CONCRETE WITH 1-1/4" MIN EMBED, 1-1/2" MIN SPACING, AND 1" MIN EDGE DISTANCE.
- (1) #12 WOOD SCREWS TO G=0.55 MIN WOOD WITH 1-1/2" MIN THREAD PENETRATION AND 3/4" MIN EDGE DISTANCE.

HINGE ANCHORS:
- 1/4" CARBON STEEL TAPCONS (ITW) THRU WOOD BUCKS OR DIRECTLY INTO MASONRY/CONCRETE WITH 1-1/4" MIN EMBED, 2" MIN SPACING, AND 2-1/2" MIN EDGE DISTANCE.
- #12 WOOD SCREWS TO G=0.55 MIN WOOD WITH 1-1/2" MIN THREAD PENETRATION, 1-1/2" MIN SPACING, AND 3/4" MIN EDGE DISTANCE.

STORM BAR ANCHORS:
- 1/4"-20 POWERS CALK-IN ANCHORS TO MASONRY/CONCRETE WITH 7/8" MIN EMBED, 2-1/2" MIN SPACING, AND 3" MIN EDGE DISTANCE.
- 1/4" ELCO PANELMATES (MALE OR FEMALE) TO MASONRY/CONCRETE WITH 1-1/4" MIN EMBED, 2-1/2" MIN SPACING, AND 3" MIN EDGE DISTANCE.
- 1/4" ELCO PANELMATES (MALE OR FEMALE) TO G=0.55 MIN WOOD WITH 1-7/8" MIN THREAD PENETRATION, 1-1/2" MIN SPACING, AND 3/4" MIN EDGE DISTANCE.

ANCHOR NOTES:

1. ANCHORS SHALL BE INSTALLED IN ACCORDANCE WITH MANUFACTURERS' RECOMMENDATIONS.
2. TAPCONS SHALL BE MANUFACTURED BY ITW. "ELCO PANELMATE" ANCHORS FOR USE IN CONCRETE, HOLLOW BLOCK OR WOOD MAY BE MALE OR FEMALE.
3. WHERE ANCHORS FASTEN TO NARROW FACE OF STUD FRAMING, ANCHOR SHALL BE LOCATED IN CENTER OF NOMINAL 2x (MIN) WOOD STUD (i.e. 3/4" EDGE DISTANCE IS ACCEPTABLE FOR ANCHORS TO WOOD FRAMING).
4. WOOD HOST STRUCTURE SHALL BE "SOUTHERN PINE" G=0.55 OR GREATER DENSITY.
5. MINIMUM EMBEDMENT SHALL BE AS NOTED IN ANCHOR SCHEDULE. MINIMUM EMBEDMENT AND EDGE DISTANCE EXCLUDES STUCCO, FOAM, BRICK, AND OTHER WALL FINISHES.
6. WHERE EXISTING STRUCTURE IS WOOD FRAMING, EXISTING CONDITIONS MAY VARY. FIELD VERIFY THAT FASTENERS ARE INTO ADEQUATE WOOD FRAMING MEMBERS, NOT INTO PLYWOOD.
7. WOOD BUCKS (BY OTHERS) SHALL BE ANCHORED PROPERLY TO TRANSFER LOADS TO THE EXISTING STRUCTURE.
8. MACHINE SCREWS SHALL HAVE MINIMUM OF 1/2" ENGAGEMENT OF THREADS IN BASE ANCHOR AND MAY HAVE EITHER A PAN HEAD, TRUSS HEAD, OR WAFER HEAD ("SIDEWALK BOLT") U.N.O.

FRANK L. BENNARDO, P.E.
PE0046549
10/11/2011

ENGINEERING EXPRESS®
160 SW 12th AVENUE, #106
DEERFIELD BEACH, FL 33442
Ph: (954) 354-0660 FAX: (954) 354-0443
WWW.ENGEXP.COM
CERT OF AUTH #8685
A FRANK L. BENNARDO, P.E., INC. INNOVATION

FLORIDA SHUTTERS, INC.
1055 COMMERCE AVENUE
VERO BEACH, FL 32960
(772) 569 - 2200

"IMPACT" ALUMINUM COLONIAL SHUTTER
MIAMI-DADE NOTICE OF ACCEPTANCE

REMARKS	DRWN	CHKD	DATE
INIT ISSUE	KL	CL	11/2/108
ADD T&G BLADE	KL	FLB	08/05/09
2010 FBC	KL	FLB	10/10/11
-	-	-	-
-	-	-	-

08-FSH-0001
SCALE: - 03
PAGE DESCRIPTION:
-
-

8

6

10/11/2011 - 11:34am keithl F:\01 Project Files\Florida Shutters (FSH)\2008\08-FSH-0001 Colonial Shutter\08-FSH-0001_03a Impact Colonial Shutter (NOA).dwg

TABLE 2: STORM BAR DESIGN SCHEDULE (FOR USE WITH SINGLE-BAR SHUTTERS ONLY)

SHUTTER WIDTH	SHUTTER HEIGHT	ALLOWABLE STORM BAR DESIGN PRESSURE (PSF)			ALLOWABLE ANCHORAGE DESIGN PRESSURE (PSF)			
		STORM BAR 'A' 2"x2"x0.125"	STORM BAR 'B' 2"x3"x0.125"	STORM BAR 'C' 2"x5"x0.125"	CONN. 'A'		CONN. 'B' & 'C'	
					WOOD	BLOCK/ CONCRETE	WOOD	BLOCK/ CONCRETE
36"	54"	80	80	80	80	80	80	65
	60"	80	80	80	80	80	80	58
	66"	80	80	80	80	80	80	53
	72"	80	80	80	80	80	80	48
	74"	80	80	80	80	80	80	47
42"	54"	80	80	80	80	80	80	55
	60"	78	80	80	80	80	80	50
	66"	71	80	80	80	80	80	45
	72"	65	80	80	80	80	80	41
	74"	63	80	80	80	80	80	40
48"	54"	69	80	80	80	80	80	48
	60"	62	80	80	80	80	80	44
	66"	57	80	80	80	80	80	40
	72"	52	80	80	80	73	80	36
	74"	51	80	80	80	71	80	35
54"	54"	57	80	80	80	80	80	43
	60"	51	80	80	80	78	80	39
	66"	46	80	80	80	71	80	35
	72"	43	79	80	80	65	80	32
	74"	41	77	80	80	63	80	31
60"	54"	47	80	80	80	78	80	39
	60"	43	80	80	80	70	80	35
	66"	39	72	80	80	64	80	32
	72"	35	66	80	80	58	80	-
	74"	35	64	80	80	57	80	-
66"	54"	40	75	80	80	71	80	35
	60"	36	67	80	80	64	80	32
	66"	33	61	80	80	58	80	-
	72"	30	56	80	80	53	79	-
	74"	-	55	80	80	51	77	-
	54"	34	64	80	80	65	80	32
	60"	31	58	80	80	58	80	-
72"	66"	-	53	80	80	53	79	-
	72"	-	48	80	80	48	73	-
	74"	-	47	80	80	47	71	-

TABLE 2 NOTES:

1. TABLE 2 SHALL BE USED ONLY FOR SHUTTERS WITH (1) STORM BAR.
2. SINGLE STORM BAR SHUTTERS SHALL NOT EXCEED 74" MAXIMUM SHUTTER HEIGHT.
3. TABLE 2 SHALL BE USED IN CONJUCTION WITH TABLE 1. DESIGN PRESSURES FOR SINGLE STORM BAR SHUTTERS SHALL NOT EXCEED THE LESSER OF THOSE INDICATED IN TABLE 1 AND TABLE 2.
4. FOR SHUTTERS GREATER THAN 74" TALL OR UTILIZING MULTIPLE STORM BARS, REFERENCE TABLE 3.

TABLE 2 CONTINUED

SHUTTER WIDTH	SHUTTER HEIGHT	ALLOWABLE STORM BAR DESIGN PRESSURE (PSF)			ALLOWABLE ANCHORAGE DESIGN PRESSURE (PSF)			
		STORM BAR 'A' 2"x2"x0.125"	STORM BAR 'B' 2"x3"x0.125"	STORM BAR 'C' 2"x5"x0.125"	CONN. 'A'		CONN. 'B' & 'C'	
					WOOD	BLOCK/ CONCRETE	WOOD	BLOCK/ CONCRETE
78"	54"	-	56	80	80	60	80	30
	60"	-	50	80	80	54	80	-
	66"	-	46	80	80	49	73	-
	72"	-	42	80	80	45	67	-
	74"	-	41	80	80	43	65	-
84"	54"	-	49	80	80	55	80	-
	60"	-	44	80	80	50	75	-
	66"	-	40	80	80	45	68	-
	72"	-	37	80	80	41	62	-
	74"	-	36	80	80	40	60	-
90"	54"	-	43	80	80	52	77	-
	60"	-	39	80	80	46	70	-
	66"	-	35	80	80	42	63	-
	72"	-	32	73	80	39	58	-
	74"	-	31	71	80	38	56	-
96"	54"	-	38	80	80	48	73	-
	60"	-	34	78	80	44	65	-
	66"	-	31	71	80	40	59	-
	72"	-	-	65	80	36	54	-
	74"	-	-	63	80	35	53	-
102"	54"	-	34	78	80	46	68	-
	60"	-	31	70	80	41	61	-
	66"	-	-	64	80	37	56	-
	72"	-	-	58	80	34	51	-
	74"	-	-	57	80	33	50	-
108"	54"	-	30	70	80	43	64	-
	60"	-	-	63	80	39	58	-
	66"	-	-	57	80	35	53	-
	72"	-	-	53	80	32	48	-
	74"	-	-	51	80	31	47	-
112"	54"	-	-	66	80	41	62	-
	60"	-	-	59	80	37	56	-
	66"	-	-	54	80	34	51	-
	72"	-	-	49	80	31	47	-
	74"	-	-	48	80	30	45	-

PRODUCT REVISED
as complying with the Florida Building Code
Acceptance No 11-1128.06
Expiration Date 02/08/2015
By
Miami Dade Product Control

FRANK L. BENNARDO, P.E.
PE0046549
FL
10/11/2011

ENGINEERING EXPRESS®
160 SW 12th AVENUE, #106
DEERFIELD BEACH, FL 33442
Ph: (954) 354-0660 Fax: (954) 354-0443
WWW.ENGEXP.COM
CERT OF AUTH #8985
A FRANK L. BENNARDO, P.E., INC. INNOVATION

FLORIDA SHUTTERS, INC.
1055 COMMERCE AVENUE
VERO BEACH, FL 32960
(772) 569 - 2200

"IMPACT" ALUMINUM COLONIAL SHUTTER
MIAMI-DADE NOTICE OF ACCEPTANCE

REMARKS	DRWN	CHKD	DATE
INIT ISSUE	KL	CL	11/21/08
ADD T&G BLADE	KL	FLB	08/05/09
2010 FBC	KL	FLB	10/10/11
-	-	-	-
-	-	-	-

08-FSH-0001
SCALE: - 03
PAGE DESCRIPTION:
-
-

8

7

10/11/2011 - 11:34am keith! F:\01 Project Files\Florida Shutters (FSH)\2008\08-FSH-0001 Colonial Shutter\08-FSH-0001_03a Impact Colonial Shutter (NOA).dwg

TABLE 3: STORM BAR DESIGN SCHEDULE
(FOR USE WITH MULTIPLE BAR SHUTTERS ONLY)

SHUTTER WIDTH	STORM BAR SPACING	ALLOWABLE STORM BAR DESIGN PRESSURE (PSF)			ALLOWABLE ANCHORAGE DESIGN PRESSURE (PSF)			
		STORM BAR 'A' 2"x2"x0.125"	STORM BAR 'B' 2"x3"x0.125"	STORM BAR 'C' 2"x5"x0.125"	CONN. 'A'		CONN. 'B' & 'C'	
					WOOD	BLOCK/ CONCRETE	WOOD	BLOCK/ CONCRETE
36"	UP TO 32"	80	80	80	80	80	80	80
	UP TO 48"	60	60	60	80	80	80	73
42"	UP TO 32"	80	80	80	80	80	80	80
	UP TO 48"	60	60	60	80	80	80	62
48"	UP TO 32"	80	80	80	80	80	80	80
	UP TO 48"	60	60	60	80	80	80	55
54"	UP TO 32"	80	80	80	80	80	80	73
	UP TO 48"	60	60	60	80	80	80	48
60"	UP TO 32"	80	80	80	80	80	80	66
	UP TO 48"	53	60	60	80	80	80	44
66"	UP TO 32"	68	80	80	80	80	80	60
	UP TO 48"	45	60	60	80	80	80	40
72"	UP TO 32"	58	80	80	80	80	80	55
	UP TO 48"	38	60	60	80	73	80	36
78"	UP TO 32"	47	80	80	80	80	80	50
	UP TO 48"	31	60	60	80	67	80	33
84"	UP TO 32"	38	80	80	80	80	80	47
	UP TO 48"	-	55	60	80	62	80	31
90"	UP TO 32"	32	73	80	80	80	80	44
	UP TO 48"	-	49	60	80	58	80	-
96"	UP TO 32"	-	65	80	80	80	80	41
	UP TO 48"	-	43	60	80	55	80	-
102"	UP TO 32"	-	58	80	80	77	80	38
	UP TO 48"	-	39	60	80	51	77	-
108"	UP TO 32"	-	51	80	80	73	80	36
	UP TO 48"	-	34	60	80	48	73	-
112"	UP TO 32"	-	47	80	80	70	80	35
	UP TO 48"	-	31	60	80	47	70	-

TABLE 3 NOTES:
1. TABLE 3 SHALL BE USED ONLY FOR SHUTTERS WITH MULTIPLE STORM BARS.
2. DESIGN PRESSURES FOR MULTIPLE BAR SHUTTERS SHALL NOT EXCEED THE DESIGN PRESSURES INDICATED IN TABLE 3.
3. FOR SHUTTERS UTILIZING ONLY ONE STORM BAR, REFERENCE TABLES 1 AND 2.

PRODUCT REVISED
as complying with the Florida
Building Code
Acceptance No 11-1128.06
Expiration Date 02/08/2015
By
Miami Dade Product Control

FRANK L. BENNARDO, P.E.
PE0046549
10/11/2011
ENGINEERING EXPRESS®
160 SW 12th AVENUE, #106
DEERFIELD BEACH, FL 33442
Ph: (954) 354-0660 Fax: (954) 354-0443
WWW.ENGEXP.COM
CERT OF AUTH #9685
A. FRANK L. BENNARDO, P.E., INC. INNOVATION

FLORIDA SHUTTERS, INC.
1055 COMMERCE AVENUE
VERO BEACH, FL 32960
(772) 569 - 2200

"IMPACT" ALUMINUM COLONIAL SHUTTER
MIAMI-DADE NOTICE OF ACCEPTANCE

REMARKS	DRWN	CHKD	DATE
INIT ISSUE	KL	CL	11/21/08
ADD T&G BLADE	KL	FLB	08/05/09
20/10 FBC	KL	FLB	10/10/11
-	-	-	-
-	-	-	-

08-FSH-0001
SCALE: - 03
PAGE DESCRIPTION:
-
-

8