MIAMI-DADE COUNTY
DEPARTMENT OF PERMITTING, ENVIRONMENT, AND REGULATORY AFFAIRS (PERA)
BOARD AND CODE ADMINISTRATION DIVISION

MIAMI-DADE COUNTY, FLORIDA
PRODUCT CONTROL SECTION
11805 SW 26th Street, Room 208
Miami, Florida 33175-2474
T (786) 315-2590 F (786) 315-2599
www.miamidade.gov/pera/

NOTICE OF ACCEPTANCE (NOA)

PGT Industries, Inc.
1070 Technology Drive
North Venice, FL 34275

SCOPE:

This NOA is being issued under the applicable rules and regulations governing the use of construction materials. The documentation submitted has been reviewed and accepted by Miami-Dade County PERA -Product Control Section to be used in Miami-Dade County and other areas where allowed by the Authority Having Jurisdiction (AHJ).

This NOA shall not be valid after the expiration date stated below. The Miami-Dade County Product Control Section (In Miami-Dade County) and/ or the AHJ (in areas other than Miami-Dade County) reserve the right to have this product or material tested for quality assurance purposes. If this product or material fails to perform in the accepted manner, the manufacturer will incur the expense of such testing and the AHJ may immediately revoke, modify, or suspend the use of such product or material within their jurisdiction. PERA reserves the right to revoke this acceptance, if it is determined by Miami-Dade County Product Control Section that this product or material fails to meet the requirements of the applicable building code.

This product is approved as described herein, and has been designed to comply with the Florida Building Code, including the High Velocity Hurricane Zone.

DESCRIPTION: Series "HR-210" Aluminum Horizontal Sliding Window – N.I.

APPROVAL DOCUMENT: Drawing No. **MD-HR210-01** titled Series "Horizontal Roller Window Details", sheets 1 through 7 of 7, prepared by manufacturer, dated 10/14/11 with the latest revision, prepared by PGT Industries, Inc., dated 03/23/12, signed and sealed by Anthony Lynn Miller, P. E., bearing the Miami-Dade County Product Control Approval stamp with the Notice of Acceptance number and Approval date by the Miami-Dade County Product Control Section.

MISSILE IMPACT RATING: None.

LABELING: Each unit shall bear a permanent label with the manufacturer's name or logo, city, state, model/ series and following statement: "Miami-Dade County Product Control Approved" unless otherwise noted herein.

RENEWAL of this NOA shall be considered after a renewal application has been filed and there has been no change in the applicable building code negatively affecting the performance of this product.

TERMINATION of this NOA will occur after the expiration date or if there has been a revision or change in the materials, use, and/or manufacture of the product or process. Misuse of this NOA as an endorsement of any product, for sales, advertising or any other purposes shall automatically terminate this NOA. Failure to comply with any section of this NOA shall be cause for termination and removal of NOA.

ADVERTISEMENT: The NOA number preceded by the words Miami-Dade County, Florida, and followed by the expiration date may be displayed in advertising literature. If any portion of the NOA is displayed, then it shall be done in its entirety.

INSPECTION: A copy of this entire NOA shall be provided to the user by the manufacturer or its distributors and shall be available for inspection at the job site at the request of the Building Official.

This NOA consists of this page 1, evidence pages E-1 and E-2, as well as approval document mentioned above.

The submitted documentation was reviewed by **Jaime D. Gascon, P. E.**

MIAMI-DADE COUNTY APPROVED

J Gascon
3/29/12

PGT Industries, Inc.

NOTICE OF ACCEPTANCE: EVIDENCE SUBMITTED

A. DRAWINGS

1. Manufacturer's die drawings and sections.
2. Drawing No. **MD–HR210–01** titled Series "Horizontal Roller Window Details", sheets 1 through 7 of 7, prepared by manufacturer, dated 10/14/11 with the latest revision, prepared by PGT Industries, Inc., dated 03/23/12, signed and sealed by Anthony Lynn Miller, P. E.

B. TESTS

1. Test reports on: 1) Air Infiltration Test, per FBC, TAS 202–94
   2) Uniform Static Air Pressure Test, Loading per FBC TAS 202–94
   3) Water Resistance Test, per FBC, TAS 202–94
   4) Forced Entry Test, Type "A" window, Grade 10, per FBC 2411 section 3.2.1, TAS 202–94 and per ASTM F 588–04
   5) Deglazing Force Test Method A, per ASTM E 987–88 (2001)
   6) Standard Test Method for Determination of Operating Force of Sliding Windows and Doors per ASTM E2068–00 (2008)

   Along with marked–up drawings and installation diagram of an Aluminum horizontal sliding window, prepared by Fenestration Testing Laboratory, Inc., Test Reports No.'s **FTL–6657** and **FTL–6658**, dated 10/17/11 and 10/18/11, both signed and sealed by Marlin D. Brinson, P. E.

C. CALCULATIONS

1. Anchor calculations and structural analysis, complying with FBC–2010, dated 11/09/11, prepared by PGT Industries, Inc., dated 03/22/12, signed and sealed by Anthony Lynn Miller, P. E.
2. **Complies with ASTM E1300–02/ 04**

D. QUALITY ASSURANCE

1. Miami–Dade Department of Permitting, Environment, and Regulatory Affairs (PERA)

E. MATERIAL CERTIFICATIONS

1. None.

Jaime D. Gascon, P. E.
Product Control Section Supervisor
NOA No. 11–1201.04
Expiration Date: April 05, 2017
Approval Date: April 05, 2012

NOTICE OF ACCEPTANCE: EVIDENCE SUBMITTED

F. STATEMENTS

1. Statement letter of conformance and compliance with the FBC–2007 (with the 2009 supplement) and FBC–2010 including the HVHZ, dated 11/07/11, signed and sealed by Anthony Lynn Miller, P. E.
2. Statement letter of no financial interest and independence, dated 11/07/11, signed and sealed by Anthony Lynn Miller, P. E.
3. Laboratory addendum letter for Test Reports No.'s **FTL–6657** and **FTL–6658**, issued by Fenestration Testing Laboratory, Inc., dated 03/22/12, signed and sealed by Marlin D. Brinson, P. E.
4. Laboratory compliance letter for Test Reports No.'s **FTL–6657** and **FTL–6658**, issued by Fenestration Testing Laboratory, Inc., dated 10/17/11 and 10/18/11, both signed and sealed by Marlin D. Brinson, P. E.

G. OTHERS

1. None.

Jaime D. Gascon, P. E.
Product Control Section Supervisor
NOA No. 11–1201.04
Expiration Date: April 05, 2017
Approval Date: April 05, 2012

GENERAL NOTES: SERIES 210 NON-IMPACT HORIZONTAL ROLLER WINDOW

1) THIS PRODUCT HAS BEEN DESIGNED & TESTED TO COMPLY WITH THE REQUIREMENTS OF THE FLORIDA BUILDING CODE, INCLUDING THE HIGH VELOCITY HURRICANE ZONE (HVHZ).

2) SHUTTERS ARE REQUIRED WHEN USED IN WIND-BORNE DEBRIS REGIONS.

3) FOR MASONRY APPLICATIONS IN MIAMI-DADE COUNTY, USE ONLY MIAMI-DADE COUNTY APPROVED MASONRY ANCHORS. MATERIALS USED FOR ANCHOR EVALUATIONS WERE SOUTHERN PINE, ASTM C90 CONCRETE MASONRY UNITS AND CONCRETE WITH MIN. KSI PER ANCHOR TYPE, SEE TABLE 1, SHEET 1.

4) ALL WOOD BUCKS LESS THAN 1-1/2" THICK ARE TO BE CONSIDERED 1X INSTALLATIONS. 1X WOOD BUCKS ARE OPTIONAL IF UNIT IS INSTALLED DIRECTLY TO SUBSTRATE. WOOD BUCKS DEPICTED AS 2X ARE 1-1/2" THICK OR GREATER. 1X AND 2X BUCKS (WHEN USED) SHALL BE DESIGNED TO PROPERLY TRANSFER LOADS TO THE STRUCTURE. WOOD BUCK DESIGN AND INSTALLATION IS THE RESPONSIBILITY OF THE ENGINEER OR ARCHITECT OF RECORD.

5) ANCHOR EMBEDMENT TO BASE MATERIAL SHALL BE BEYOND WALL DRESSING OR STUCCO. USE ANCHORS OF SUFFICIENT EMBEDMENT AS SPECIFIED ON TABLE 1, SHEET 1. NARROW JOINT SEALANT IS USED ON ALL FOUR CORNERS OF THE FRAME. INSTALLATION ANCHORS SHOULD BE SEALED. OVERALL SEALING/FLASHING STRATEGY FOR WATER RESISTANCE OF INSTALLATION SHALL BE DONE BY OTHERS AND IS BEYOND THE SCOPE OF THESE INSTRUCTIONS.

6) SHIMS ARE REQUIRED AT EACH ANCHOR LOCATION WHERE THE PRODUCT IS NOT FLUSH TO THE SUBSTRATE. USE SHIMS CAPABLE OF TRANSFERRING APPLIED LOADS. SHIM TO BE NO MORE THAN 1/4" THICK. WOOD BUCKS, BY OTHERS, MUST BE SUFFICIENTLY ANCHORED TO RESIST LOADS IMPOSED ON THEM BY THE WINDOW.

7) DESIGN PRESSURES:
A. NEGATIVE DESIGN LOADS BASED ON STRUCTURAL TEST PRESSURE, FRAME ANALYSIS AND GLASS PER ASTM E1300-04.
B. POSITIVE DESIGN LOADS BASED ON WATER TEST PRESSURE, STRUCTURAL TEST PRESSURE, FRAME ANALYSIS AND GLASS PER ASTM E1300-04.

8) THE ANCHORAGE METHODS SHOWN HAVE BEEN DESIGNED TO RESIST THE WINDLOADS CORRESPONDING TO THE REQUIRED DESIGN PRESSURE. THE 33 1/3% STRESS INCREASE HAS NOT BEEN USED IN THE DESIGN OF THIS PRODUCT. THE 1.6 LOAD DURATION FACTOR WAS USED FOR THE EVALUATION OF ANCHORS INTO WOOD. ANCHORS THAT COME INTO CONTACT WITH OTHER DISSIMILAR MATERIALS SHALL MEET THE REQUIREMENTS OF THE FLORIDA BUILDING CODE FOR CORROSION RESISTANCE.

9) REFERENCES: TEST REPORTS FTL-6657 & 6658; ELCO ULTRACON NOA; ELCO CRETEFLEX NOA; ANSI/AF&PA NDS FOR WOOD CONSTRUCTION AND ADM ALUMINUM DESIGN MANUAL.

10) THE 210 SERIES HORIZONTAL ROLLER WINDOW WAS FORMERLY KNOWN AS THE 201 SERIES.

DESIGN PRESSURE RATING	IMPACT RATING
VARIES, SEE SHEETS 3 & 4	NOT RATED FOR IMPACT RESISTANCE

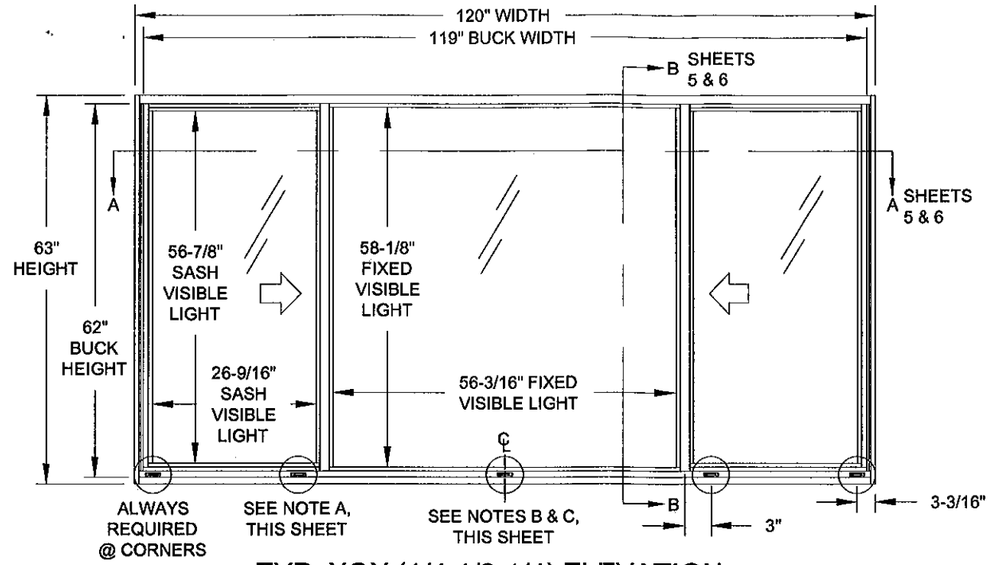

TYP. XOX (1/4-1/2-1/4) ELEVATION

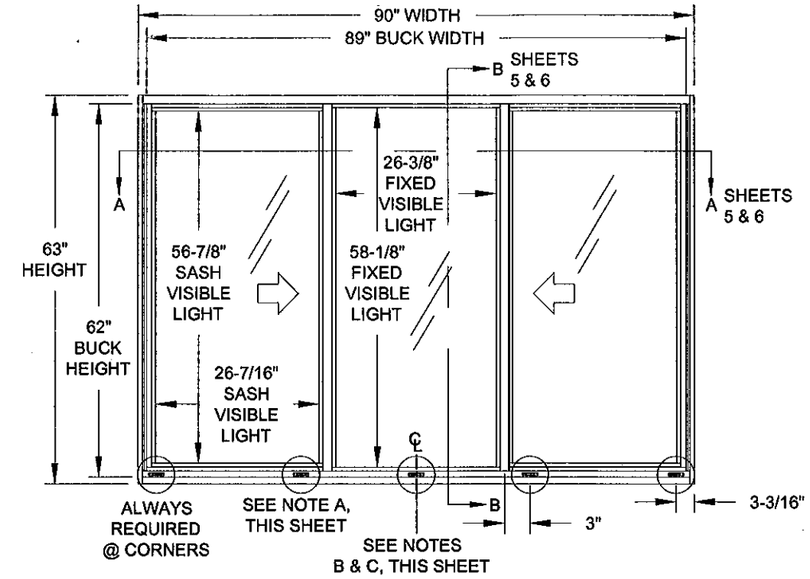

TYP. XOX (1/3-1/3-1/3) ELEVATION

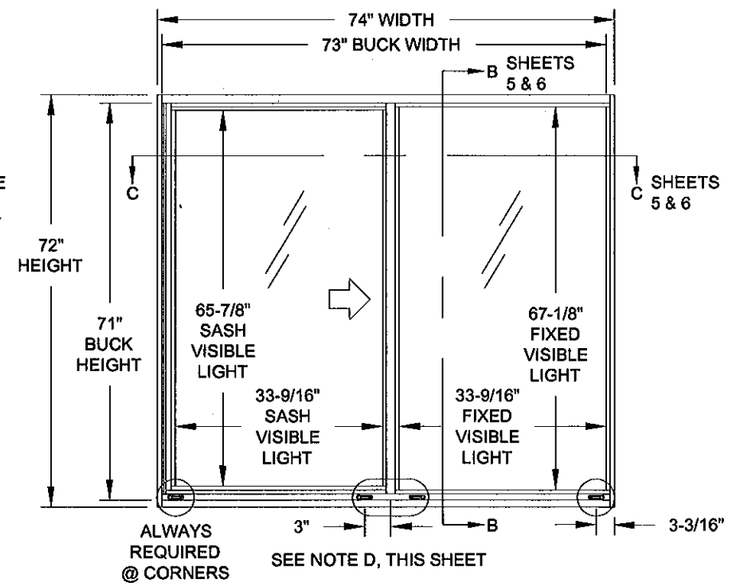

TYP. XO ELEVATION (OX SIM.)

TABLE 1:

Anchor Group	Anchor	Substrate	Min. Edge Distance	Min. Embedment
A	1/4" Steel Ultracon	Hollow Block, (ASTM C90)	1"	1-1/4"
B	#12 Steel SMS (G5) or #12 410 SS SMS	P.T. Southern Pine (SG = .55)	9/16"	1-3/8"
		A36 Steel, .125" min	3/8"	Min. of 3 threads beyond metal substrate
		A653 Stud, Gr. 33, 0.0346" min. (20 Ga)	3/8"	
		Aluminum, 6063-T5, .125" min.	3/8"	
C	1/4" Steel Ultracon	Concrete (min. 2.7 ksi)	1"	1-3/8"
		Grouted-filled Block, (ASTM C90)	2-1/4"	1-3/4"
	1/4" 410 SS CreteFlex	Concrete (min. 3.5 ksi)	1"	1-3/4"
		Hollow Block, (ASTM C90)	1-3/4"	1-1/4"

WEEPHOLE NOTES, (SEE WEEPHOLE DETAILS, SHEET 7 OF 8):
A. REQUIRED IF WINDOW WIDTH IS OVER 67".
B. REQUIRED IF WINDOW WIDTH IS OVER 45" AND UP TO 67".
C. REQUIRED IF WINDOW WIDTH IS OVER 89".
D. REQUIRED IF WINDOW WIDTH IS OVER 45".

GENERAL NOTES..... 1
ELEVATIONS..... 1
ANCHOR SPECIFICATIONS..... 1
ANCHOR SPACING/QUANTITIES... 2
DESIGN PRESSURES, XO/OX..... 3
DESIGN PRESSURES, XOX..... 4
INSTALLATION, STD MR..... 5
INSTALLATION, HD MR..... 6
GLAZING DETAILS..... 7
CORNER ASSEMBLY..... 7
EXTRUSION PROFILES..... 8
PARTS LIST..... 8

ANTHONY LYNN MILLER LICENSE No. 58705 STATE OF FLORIDA PROFESSIONAL ENGINEER
3/23/12
A. LYNN MILLER, P.E.
P.E.# 58705

PGT®
1070 TECHNOLOGY DRIVE
N. VENICE, FL 34275
P.O. BOX 1529
NOKOMIS, FL 34274
CERT. OF AUTH. #29296

Revised By:	Date:	Revision:
Revised By:	Date:	Revision:

Approved as complying with the Florida Building Code
Date 04/05/2012
NOA# 11-1201.04
Miami Dade Product Control
By

Description:	Drawn By:
GENERAL NOTES & ELEVATION	J ROSOWSKI

Title:	Date:
HORIZONTAL ROLLER WINDOW DETAILS	12/01/11

Series/Model:	Scale:	Sheet:	Drawing No.	Rev:
HR-210	NTS	1 OF 8	MD-HR210-01	

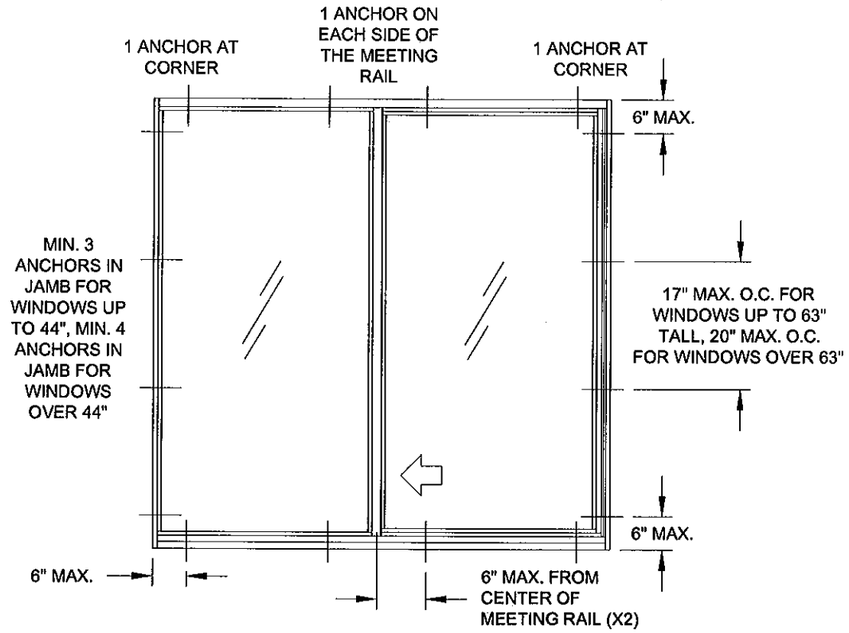

ANCHORAGE FOR ALL XO/OX CONFIGURATIONS

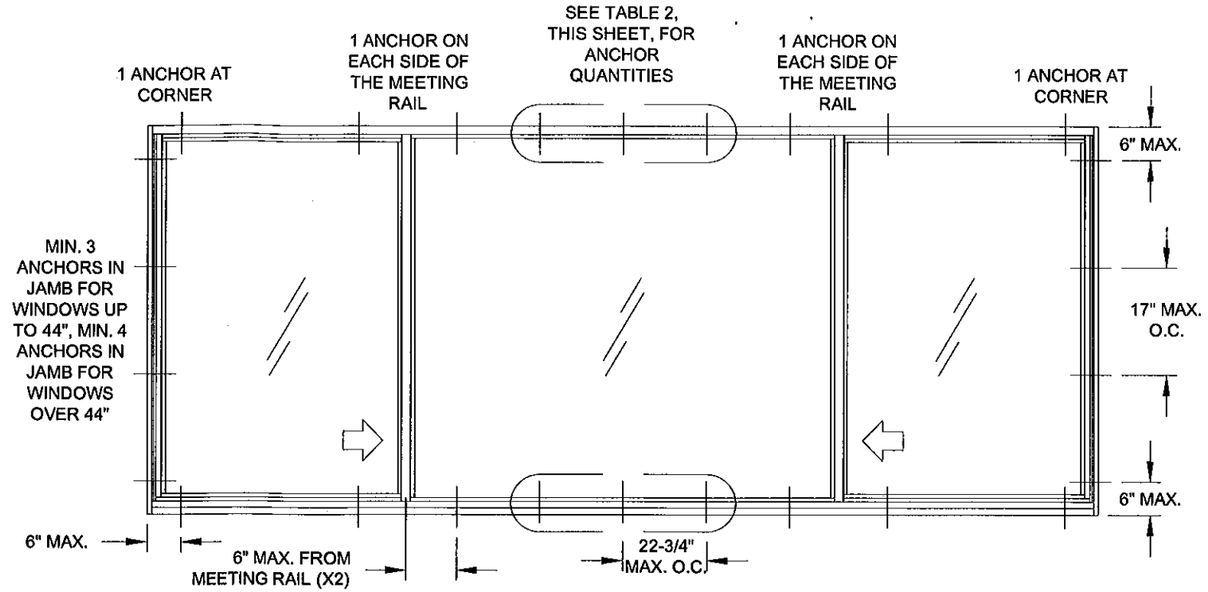

XO, OX & XOX: EGRESS HEIGHT: (WH - 4-5/8)
XO & OX: EGRESS WIDTH: (WW/2 - 3-1/2)
XOX (1/4-1/2-1/4): EGRESS WIDTH: (WW/4 - 2-5/16)
XOX (1/3-1/3-1/3): EGRESS WIDTH: (WW/3 - 6)

ANCHORAGE FOR ALL XOX (1/4-1/2-1/4) CONFIGURATIONS

XO, OX & XOX: SASH VISIBLE LIGHT HEIGHT: (WH - 6-1/8) FIXED VISIBLE LIGHT HEIGHT: (WH - 4-7/8)
XO & OX: SASH & FIXED VISIBLE LIGHT WIDTH: (WW/2 - 3-7/16)
XOX (1/4-1/2-1/4): SASH VISIBLE LIGHT WIDTH: (WW/4 - 3-7/16) FIXED VISIBLE LIGHT WIDTH: (WW/2 - 3-13/16)
XOX (1/3-1/3-1/3): SASH & FIXED VISIBLE LIGHT WIDTH: (WW/3 - 3-9/16)

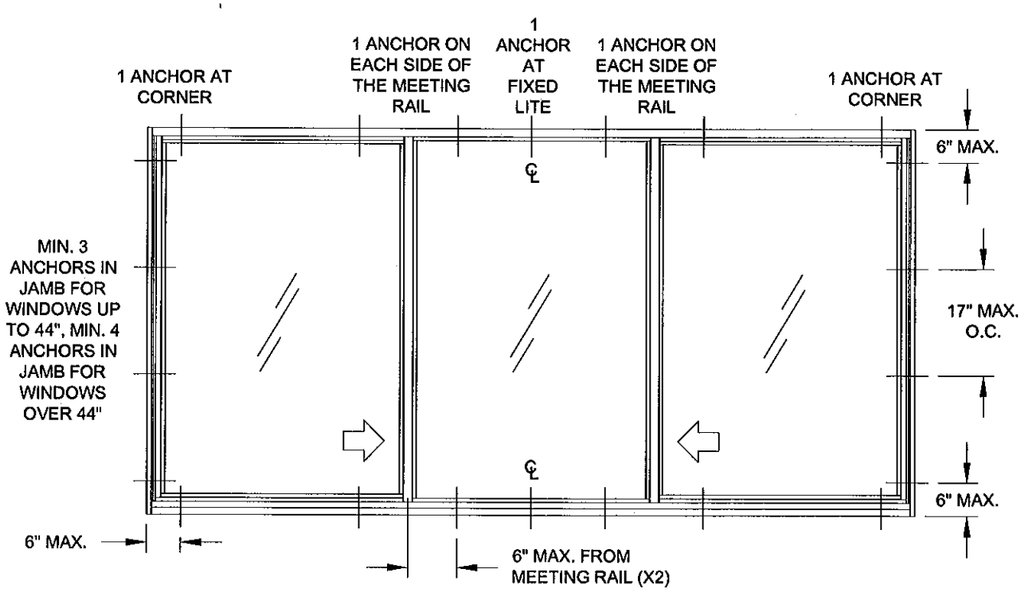

ANCHORAGE FOR ALL XOX (1/3-1/3-1/3) CONFIGURATIONS

TABLE 2:

FRAME TYPE	FRAME WIDTH	FRAME HEIGHT											
		38-3/8"			44"			50-5/8"			63"		
		ANCHOR GROUP			ANCHOR GROUP			ANCHOR GROUP			ANCHOR GROUP		
		A	B	C	A	B	C	A	B	C	A	B	C
STANDARD MEETING RAIL	53-1/8"	1	1	1	1	1	1	1	1	1	1	1	1
	74"	2	2	1	1	2	1	1	1	1	1	1	1
	85"	2	2	2	2	2	1	1	2	1	1	1	1
	97"	2	3	2	2	2	2	2	2	1	1	1	1
	109"	3	3	2	2	3	2	2	2	2	1	2	1
	120"	3	3	3	3	3	2	2	2	2	2	2	1
HEAVY DUTY MEETING RAIL	53-1/8"	1	1	1	1	1	1	1	1	1	1	1	1
	74"	2	2	1	2	2	1	2	2	1	1	1	1
	85"	2	2	2	2	2	2	2	2	2	2	2	1
	97"	2	3	2	2	3	2	2	2	2	2	2	2
	109"	3	3	2	3	3	3	3	3	2	2	2	2
	120"	3	4	3	3	4	3	3	3	3	2	2	2

SEE TABLE 1, SHEET 1 FOR ANCHOR GROUP DESCRIPTIONS.

Approved as complying with the Florida Building Code
Date 04/05/2012
NOA# 11-1201.04
Miami Dade Product Control
By

ANTHONY LYNN MILLER
LICENSE
No. 58705
3/23/12
STATE OF FLORIDA
PROFESSIONAL ENGINEER
A. LYNN MILLER, P.E.
P.E.# 58705

PGT®
1070 TECHNOLOGY DRIVE
N. VENICE, FL 34275
P.O. BOX 1529
NOKOMIS, FL 34274
CERT. OF AUTH. #29296

Revised By:	Date:	Revision:
Revised By:	Date:	Revision:

Description: ANCHOR SPACING & QUANTITIES	Drawn By: J ROSOWSKI
Title: HORIZONTAL ROLLER WINDOW DETAILS	Date: 12/01/11

Series/Model:	Scale:	Sheet:	Drawing No.	Rev:
HR-210	NTS	2 OF 8	MD-HR210-01	

Approved as complying with the Florida Building Code
Date 04/05/2012
NOA# 11-1201.04
Miami-Dade Product Control
By

TABLE 3:

XO OR OX CONFIGURATIONS		MAXIMUM DESIGN PRESSURE RATING (psf)								
		STANDARD MEETING RAIL				HEAVY DUTY MEETING RAIL				
		FRAME HEIGHT				FRAME HEIGHT				
FRAME WIDTH	GLASS TYPE	38-3/8"	44"	50-5/8"	63"	38-3/8"	44"	50-5/8"	63"	72"
26-1/2"	Glass 1	+55.0/-90.0	+55.0/-90.0	+55.0/-86.9	+55.0/-67.9	+55.0/-90.0	+55.0/-90.0	+55.0/-86.9	+55.0/-67.9	N/A
	Glass 2 & 3	+55.0/-90.0	+55.0/-90.0	+55.0/-90.0	+55.0/-90.0	+55.0/-90.0	+55.0/-90.0	+55.0/-90.0	+55.0/-90.0	+55.0/-90.0
	Glass 4 & 5	+55.0/-90.0	+55.0/-90.0	+55.0/-90.0	+55.0/-90.0	+55.0/-90.0	+55.0/-90.0	+55.0/-90.0	+55.0/-90.0	+55.0/-90.0
37"	Glass 1	+55.0/-73.5	+55.0/-61.2	+55.0/-56.0	+49.7/-49.7	+55.0/-73.5	+55.0/-61.2	+55.0/-56.0	+49.7/-49.7	N/A
	Glass 2 & 3	+55.0/-90.0	+55.0/-90.0	+55.0/-87.2	+55.0/-67.2	+55.0/-90.0	+55.0/-90.0	+55.0/-90.0	+55.0/-90.0	+55.0/-77.9
	Glass 4 & 5	+55.0/-90.0	+55.0/-90.0	+55.0/-90.0	+55.0/-84.0	+55.0/-90.0	+55.0/-90.0	+55.0/-90.0	+55.0/-90.0	+55.0/-78.1
45"	Glass 1	+55.0/-67.5	+53.7/-53.7	+44.6/-44.6	+35.5/-35.5	+55.0/-67.5	+53.7/-53.7	+44.6/-44.6	+35.5/-35.5	N/A
	Glass 2	+55.0/-90.0	+55.0/-90.0	+55.0/-75.0	+55.0/-57.1	+55.0/-90.0	+55.0/-90.0	+55.0/-89.2	+55.0/-77.2	+55.0/-65.8
	Glass 3	+55.0/-90.0	+55.0/-90.0	+55.0/-75.0	+55.0/-57.1	+55.0/-90.0	+55.0/-90.0	+55.0/-80.3	+55.0/-63.9	+55.0/-57.1
	Glass 4 & 5	+55.0/-90.0	+55.0/-90.0	+55.0/-90.0	+55.0/-71.4	+55.0/-90.0	+55.0/-90.0	+55.0/-90.0	+55.0/-77.4	+55.0/-66.0
49"	Glass 1	+55.0/-66.0	+53.1/-53.1	+43.6/-43.6	+32.3/-32.3	+55.0/-66.0	+53.1/-53.1	+43.6/-43.6	+32.3/-32.3	N/A
	Glass 2	+55.0/-90.0	+55.0/-85.1	+55.0/-70.5	+53.4/-53.4	+55.0/-90.0	+55.0/-88.9	+55.0/-79.9	+55.0/-68.0	+55.0/-61.3
	Glass 3	+55.0/-90.0	+55.0/-85.1	+55.0/-70.5	+53.4/-53.4	+55.0/-90.0	+55.0/-90.0	+55.0/-78.5	+55.0/-58.1	+50.6/-50.6
	Glass 4 & 5	+55.0/-90.0	+55.0/-90.0	+55.0/-88.1	+55.0/-66.7	+55.0/-90.0	+55.0/-90.0	+55.0/-90.0	+55.0/-72.3	+55.0/-61.5
53-1/8"	Glass 1	+55.0/-63.7	+52.4/-52.4	+43.5/-43.5	+31.2/-31.2	+55.0/-63.7	+52.4/-52.4	+43.5/-43.5	+31.2/-31.2	N/A
	Glass 2	+55.0/-90.0	+55.0/-81.0	+55.0/-66.7	+50.2/-50.2	+55.0/-90.0	+55.0/-85.0	+55.0/-73.8	+55.0/-59.4	+54.0/-54.0
	Glass 3	+55.0/-90.0	+55.0/-81.0	+55.0/-66.7	+50.2/-50.2	+55.0/-90.0	+55.0/-90.0	+55.0/-78.3	+55.0/-56.2	+46.8/-46.8
	Glass 4 & 5	+55.0/-90.0	+55.0/-90.0	+55.0/-83.4	+55.0/-62.7	+55.0/-90.0	+55.0/-90.0	+55.0/-90.0	+55.0/-68.0	+55.0/-57.4
61"	Glass 1	+55.0/-59.2	+50.4/-50.4	+42.8/-42.8	+31.8/-31.8	+55.0/-59.2	+50.4/-50.4	+42.8/-42.8	+31.8/-31.8	N/A
	Glass 2	+55.0/-89.2	+55.0/-75.1	+55.0/-61.1	+45.4/-45.4	+55.0/-89.2	+55.0/-79.3	+55.0/-67.2	+51.0/-51.0	+44.0/-44.0
	Glass 3	+55.0/-90.0	+55.0/-75.1	+55.0/-61.1	+45.4/-45.4	+55.0/-90.0	+55.0/-90.0	+55.0/-77.0	+55.0/-57.2	+46.4/-46.4
	Glass 4 & 5	+55.0/-90.0	+55.0/-90.0	+55.0/-76.4	+55.0/-56.7	+55.0/-90.0	+55.0/-90.0	+55.0/-82.9	+55.0/-61.5	+51.8/-51.8
66"	Glass 1	+55.0/-56.3	+48.5/-48.5	+41.6/-41.6	+32.0/-32.0	+55.0/-56.3	+48.5/-48.5	+41.6/-41.6	+32.0/-32.0	N/A
	Glass 2	+55.0/-79.7	+55.0/-72.5	+55.0/-58.5	+43.0/-43.0	+55.0/-79.7	+55.0/-77.1	+55.0/-65.2	+49.3/-49.3	+41.2/-41.2
	Glass 3	+55.0/-79.7	+55.0/-72.5	+55.0/-58.5	+43.0/-43.0	+55.0/-79.7	+55.0/-79.7	+55.0/-74.9	+55.0/-57.6	+47.0/-47.0
	Glass 4 & 5	+55.0/-79.7	+55.0/-79.7	+55.0/-73.1	+53.8/-53.8	+55.0/-79.7	+55.0/-79.7	+55.0/-79.3	+55.0/-58.3	+48.9/-48.9
74"	Glass 1	+51.1/-51.1	+44.2/-44.2	+38.9/-38.9	+30.0/-30.0	+51.1/-51.1	+44.2/-44.2	+38.9/-38.9	+30.0/-30.0	N/A
	Glass 2	+55.0/-63.5	+55.0/-63.5	+55.0/-55.3	+40.0/-40.0	+55.0/-63.5	+55.0/-63.5	+55.0/-62.0	+47.9/-47.9	+39.8/-39.8
	Glass 3	+55.0/-63.5	+55.0/-63.5	+55.0/-55.3	+40.0/-40.0	+55.0/-63.5	+55.0/-63.5	+55.0/-63.5	+54.1/-54.1	+45.0/-45.0
	Glass 4 & 5	+55.0/-63.5	+55.0/-63.5	+55.0/-63.5	+50.0/-50.0	+55.0/-63.5	+55.0/-63.5	+55.0/-63.5	+54.2/-54.2	+45.1/-45.1

TABLE 4:

Glass Types	
1	1/8" Annealed
	1/8" Tempered
2	3/16" Annealed
	1/4" Annealed
3	1/8" Annealed-1/4" Airspace-1/8" Annealed
	3/16" Annealed-3/16" Airspace-1/8" Annealed
4	3/16" Tempered
	1/4" Tempered
5	1/8" Tempered-1/4" Airspace-1/8" Tempered
	3/16" Tempered-3/16" Airspace-1/8" Tempered

NOTES:

1) USE THIS TABLE FOR ALL XO/OX WINDOWS PER THE ELEVATION ON SHEET 1. DIMENSIONS SHOWN ARE TIP-TO-TIP.

2) FOR SIZES NOT SHOWN, ROUND UP TO THE NEXT AVAILABLE WIDTH OR HEIGHT DIMENSION SHOWN ON THE TABLE.

3) DESIGN PRESSURES MAY BE INTERPOLATED BETWEEN SIZES.

CONFIGURATIONS APPLICABLE TO THIS SHEET:

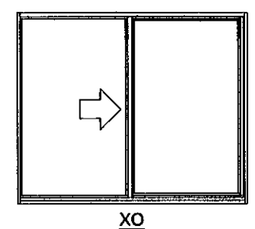

XO

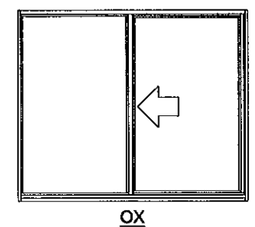

OX

Drawn By: J ROSOWSKI
Drawn Date: 12/01/11
Revision:
Revision:
Revised By:
Date:
Revised By:
Date:
Description: DESIGN PRESSURE XO/OX
Title: HORIZONTAL ROLLER WINDOW DETAILS
Drawing No. MD-HR210-01
Rev:
Sheet: 3 OF 8
Scale: NTS
Series/Model: HR-210

1070 TECHNOLOGY DRIVE
N. VENICE, FL 34275
P.O. BOX 1529
NOKOMIS, FL 34274
CERT. OF AUTH. #29296

ANTHONY LYNN MILLER
LICENSE
No. 58705
STATE OF FLORIDA
PROFESSIONAL ENGINEER
3/23/12
A. LYNN MILLER, P.E.
P.E.# 58705

Approved as complying with the Florida Building Code
Date 04/05/2012
NOA# 11-1201.04
Miami-Dade Product Control
By

TABLE 5:

XOX CONFIGURATION			MAXIMUM DESIGN PRESSURE RATING (psf)							
	FRAME WIDTH	GLASS TYPE	STANDARD MEETING RAIL				HEAVY DUTY MEETING RAIL			
			FRAME HEIGHT				FRAME HEIGHT			
			38-3/8"	44"	50-5/8"	63"	38-3/8"	44"	50-5/8"	63"
1/3 - 1/3 - 1/3 CONFIGURATION	49"	Glass 2 & 3	+55.0/-90.0	+55.0/-90.0	+55.0/-76.3	+55.0/-59.2	+55.0/-90.0	+55.0/-90.0	+55.0/-90.0	+55.0/-78.9
		Glass 4 & 5	+55.0/-90.0	+55.0/-90.0	+55.0/-89.1	+55.0/-69.1	+55.0/-90.0	+55.0/-90.0	+55.0/-90.0	+55.0/-90.0
	53-1/8"	Glass 2 & 3	+55.0/-90.0	+55.0/-84.7	+55.0/-71.4	+55.0/-55.1	+55.0/-90.0	+55.0/-90.0	+55.0/-90.0	+55.0/-73.5
		Glass 4 & 5	+55.0/-90.0	+55.0/-90.0	+55.0/-83.2	+55.0/-64.3	+55.0/-90.0	+55.0/-90.0	+55.0/-90.0	+55.0/-90.0
	61"	Glass 2 & 3	+55.0/-90.0	+55.0/-76.3	+55.0/-63.9	+49.0/-49.0	+55.0/-90.0	+55.0/-90.0	+55.0/-85.1	+55.0/-65.3
		Glass 4 & 5	+55.0/-90.0	+55.0/-89.0	+55.0/-74.5	+55.0/-57.1	+55.0/-90.0	+55.0/-90.0	+55.0/-90.0	+55.0/-84.5
	74"	Glass 2 & 3	+55.0/-81.0	+55.0/-66.8	+55.0/-55.3	+41.9/-41.9	+55.0/-90.0	+55.0/-88.9	+55.0/-73.7	+55.0/-55.8
		Glass 4 & 5	+55.0/-90.0	+55.0/-77.9	+55.0/-64.5	+48.8/-48.8	+55.0/-90.0	+55.0/-90.0	+55.0/-90.0	+55.0/-72.2
	85"	Glass 2 & 3	+55.0/-75.6	+55.0/-61.5	+50.4/-50.4	+37.7/-37.7	+55.0/-90.0	+55.0/-81.8	+55.0/-67.2	+50.3/-50.3
		Glass 4 & 5	+55.0/-88.2	+55.0/-71.7	+55.0/-58.8	+44.0/-44.0	+55.0/-90.0	+55.0/-90.0	+55.0/-86.9	+55.0/-65.0
	90"	Glass 2 & 3	+55.0/-73.8	+55.0/-59.6	+48.6/-48.6	+36.2/-36.2	+55.0/-90.0	+55.0/-79.5	+55.0/-64.8	+48.2/-48.2
		Glass 4 & 5	+55.0/-86.1	+55.0/-69.6	+55.0/-56.7	+42.2/-42.2	+55.0/-90.0	+55.0/-90.0	+55.0/-83.9	+55.0/-62.4
1/4 - 1/2 - 1/4 CONFIGURATION	53-1/8"	Glass 2	+55.0/-90.0	+55.0/-79.5	+55.0/-66.4	+50.8/-50.8	+55.0/-90.0	+55.0/-85.0	+55.0/-73.8	+55.0/-59.4
		Glass 3	+55.0/-90.0	+55.0/-79.5	+55.0/-66.4	+50.8/-50.8	+55.0/-90.0	+55.0/-90.0	+55.0/-78.3	+55.0/-56.2
		Glass 4 & 5	+55.0/-90.0	+55.0/-90.0	+55.0/-77.5	+55.0/-59.2	+55.0/-90.0	+55.0/-90.0	+55.0/-90.0	+55.0/-87.5
	74"	Glass 2	+55.0/-80.4	+55.0/-64.9	+52.9/-52.9	+39.3/-39.3	+55.0/-83.1	+55.0/-72.8	+55.0/-62.0	+47.9/-47.9
		Glass 3	+55.0/-80.4	+55.0/-64.9	+52.9/-52.9	+39.3/-39.3	+55.0/-90.0	+55.0/-79.6	+55.0/-70.0	+52.5/-52.5
		Glass 4 & 5	+55.0/-90.0	+55.0/-75.8	+55.0/-61.8	+45.9/-45.9	+55.0/-90.0	+55.0/-90.0	+55.0/-90.0	+55.0/-67.8
	85"	Glass 2	+55.0/-74.7	+55.0/-61.2	+49.1/-49.1	+35.8/-35.8	+55.0/-74.7	+55.0/-67.2	+55.0/-58.9	+46.8/-46.8
		Glass 3	+55.0/-77.2	+55.0/-61.2	+49.1/-49.1	+35.8/-35.8	+55.0/-81.9	+55.0/-71.1	+55.0/-62.8	+47.8/-47.8
		Glass 4 & 5	+55.0/-90.0	+55.0/-71.4	+55.0/-57.3	+41.8/-41.8	+55.0/-90.0	+55.0/-90.0	+55.0/-84.6	+55.0/-61.8
	97"	Glass 2	+55.0/-65.3	+55.0/-58.8	+46.3/-46.3	+33.1/-33.1	+55.0/-65.3	+55.0/-60.0	+53.7/-53.7	+43.9/-43.9
		Glass 3	+55.0/-72.5	+55.0/-58.8	+46.3/-46.3	+33.1/-33.1	+55.0/-72.5	+55.0/-63.7	+54.7/-54.7	+44.2/-44.2
		Glass 4 & 5	+55.0/-87.0	+55.0/-68.6	+54.1/-54.1	+38.7/-38.7	+55.0/-90.0	+55.0/-90.0	+55.0/-79.9	+55.0/-57.1
	109"	Glass 2	+55.0/-56.7	+53.4/-53.4	+44.7/-44.7	+31.2/-31.2	+55.0/-56.7	+53.4/-53.4	+48.4/-48.4	+40.5/-40.5
		Glass 3	+55.0/-64.8	+55.0/-55.8	+44.7/-44.7	+31.2/-31.2	+55.0/-64.8	+55.0/-55.8	+48.2/-48.2	+39.6/-39.6
		Glass 4 & 5	+55.0/-84.7	+55.0/-66.5	+52.2/-52.2	+36.4/-36.4	+55.0/-90.0	+55.0/-90.0	+55.0/-77.1	+53.8/-53.8
	120"	Glass 2	+49.7/-49.7	+47.9/-47.9	+43.6/-43.6	+30.0/-30.0	+49.7/-49.7	+47.9/-47.9	+44.3/-44.3	+37.5/-37.5
		Glass 3	+55.0/-57.6	+51.1/-51.1	+43.6/-43.6	+30.0/-30.0	+55.0/-57.6	+51.1/-51.1	+44.1/-44.1	+35.8/-35.8
		Glass 4 & 5	+55.0/-83.2	+55.0/-65.0	+50.9/-50.9	+35.0/-35.0	+55.0/-90.0	+55.0/-90.0	+55.0/-75.2	+51.7/-51.7

TABLE 6:

Glass Types	
2	3/16" Annealed
	1/4" Annealed
3	1/8" Annealed-1/4" Airspace-1/8" Annealed
	3/16" Annealed-3/16" Airspace-1/8" Annealed
4	3/16" Tempered
	1/4" Tempered
5	1/8" Tempered-1/4" Airspace-1/8" Tempered
	3/16" Tempered-3/16" Airspace-1/8" Tempered

NOTES:

1) USE THIS TABLE FOR ALL XOX WINDOWS PER THE ELEVATIONS ON SHEET 1. DIMENSIONS SHOWN ARE TIP-TO-TIP.

2) FOR SIZES NOT SHOWN, ROUND UP TO THE NEXT AVAILABLE WIDTH OR HEIGHT DIMENSION SHOWN ON THE TABLE.

3) DESIGN PRESSURES MAY BE INTERPOLATED BETWEEN SIZES.

CONFIGURATIONS APPLICABLE TO THIS SHEET:

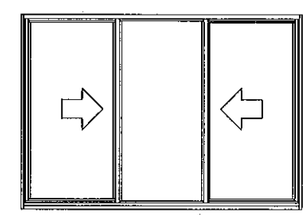

XOX (1/3-1/3-1/3)

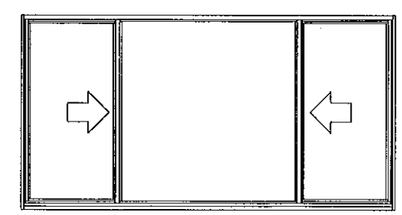

XOX (1/4-1/2-1/4)

Drawn By: J ROSOWSKI
Drawn Date: 12/01/11
Revision:
Revision:
Revised By:
Date:
Revised By:
Date:
Description: DESIGN PRESSURE XOX
Title: HORIZONTAL ROLLER WINDOW DETAILS
Series/Model: HR-210
Scale: NTS
Sheet: 4 OF 8
Drawing No. MD-HR210-01
Rev:

PGT®
1070 TECHNOLOGY DRIVE
N. VENICE, FL 34275
P.O. BOX 1529
NOKOMIS, FL 34274
CERT. OF AUTH. #29296

ANTHONY LYNN MILLER
LICENSE No. 58705 STATE OF FLORIDA
PROFESSIONAL ENGINEER
3/23/12
A. LYNN MILLER, P.E.
P.E.# 58705

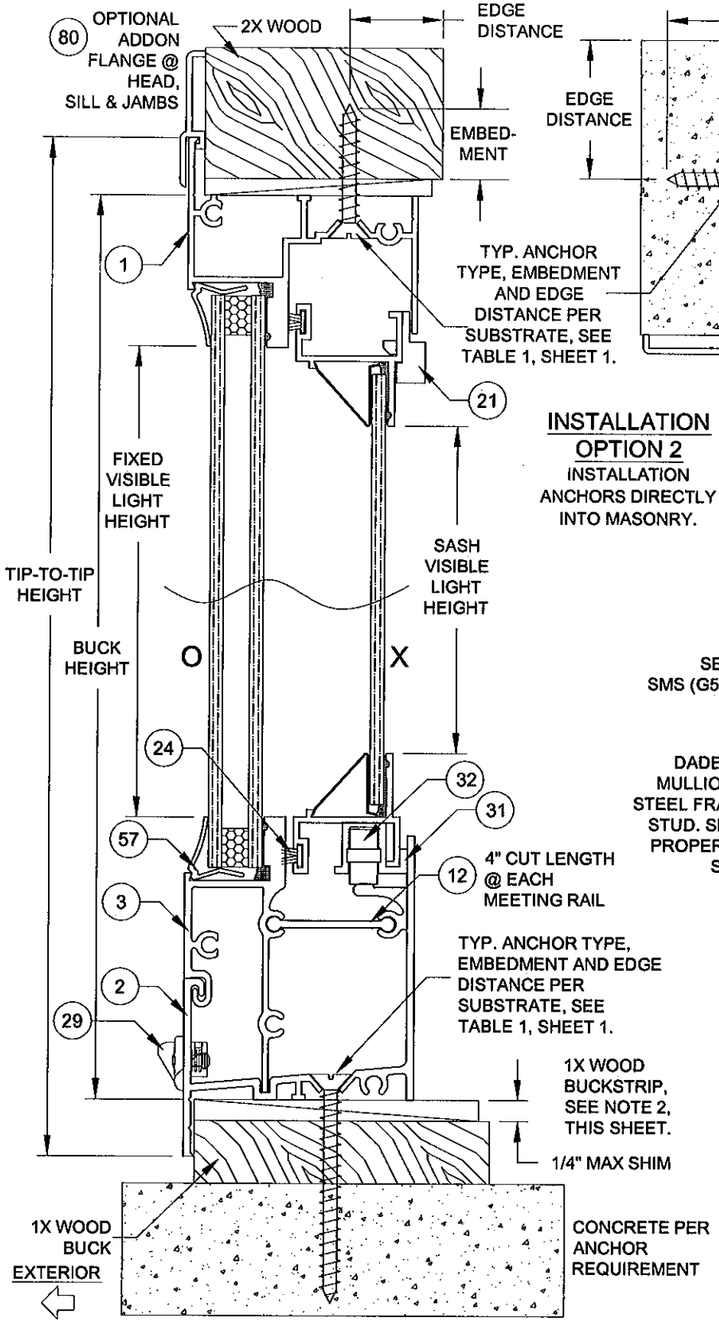

VERTICAL SECTION B-B

INSTALLATION OPTION 3
INSTALLATION ANCHORS THROUGH 1X BUCKSTRIP INTO MASONRY.

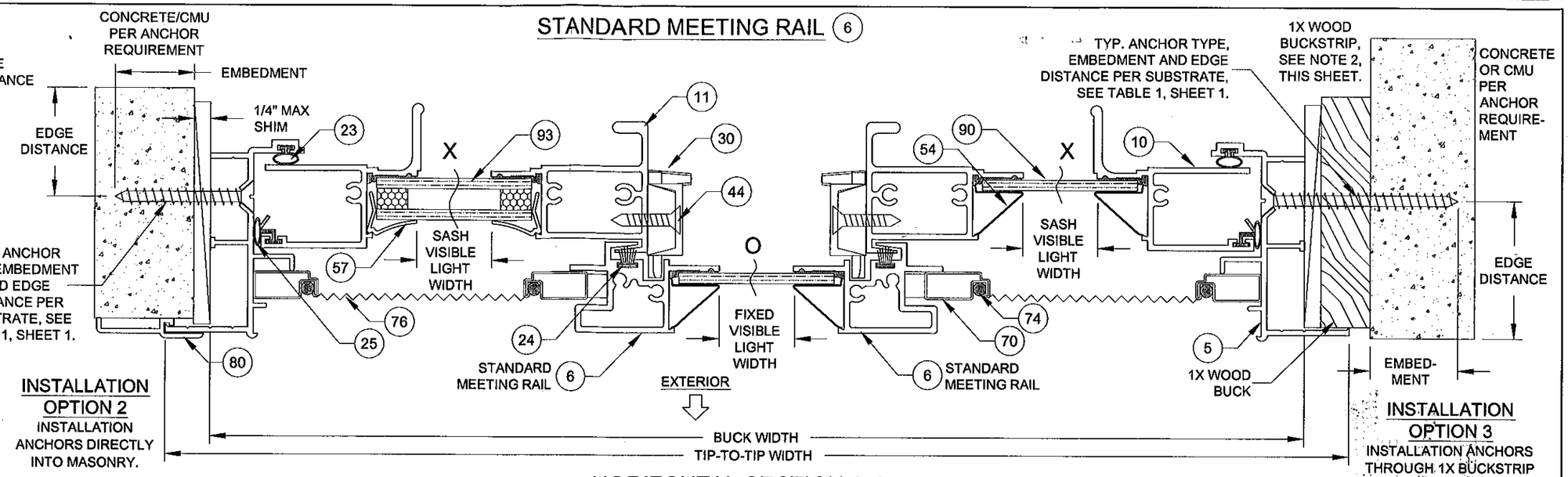

INSTALLATION OPTION 2
INSTALLATION ANCHORS DIRECTLY INTO MASONRY.

INSTALLATION OPTION 3
INSTALLATION ANCHORS THROUGH 1X BUCKSTRIP INTO MASONRY.

HORIZONTAL SECTION A-A

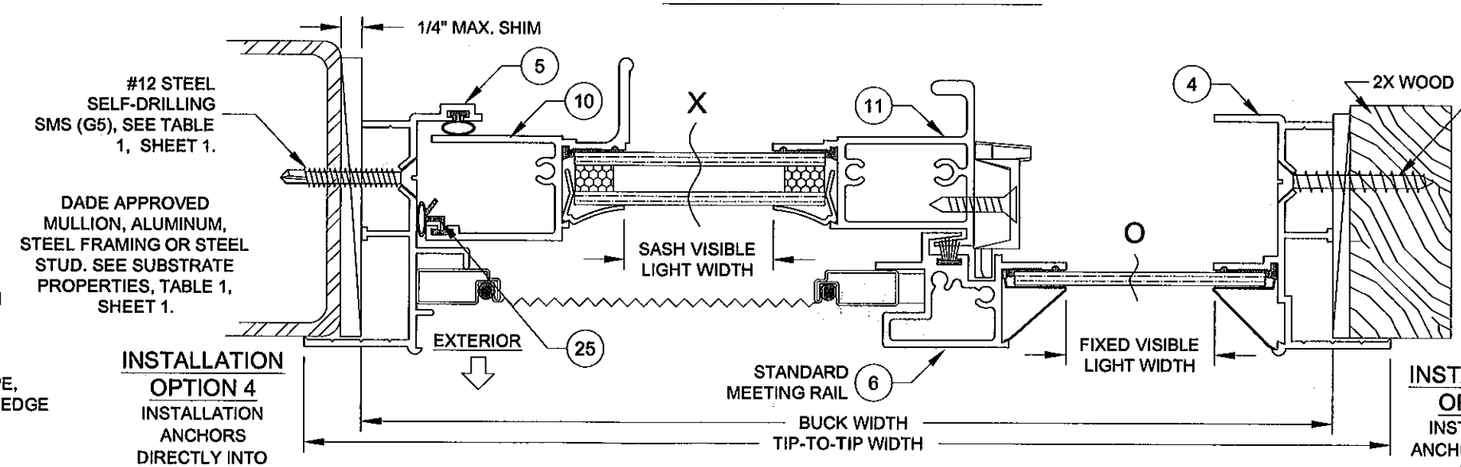

INSTALLATION OPTION 4
INSTALLATION ANCHORS DIRECTLY INTO METAL.

INSTALLATION OPTION 1
INSTALLATION ANCHORS INTO 2X WOOD.

HORIZONTAL SECTION C-C

NOTES:

1) USE ONLY SUBSTRATE-APPROPRIATE ANCHORS LISTED ON TABLE 1 OF SHEET 1. FOLLOW EMBEDMENT AND EDGE DISTANCE LIMITS. ANY INSTALLATION OPTION SHOWN MAY BE USED ON ANY SIDE OF THE WINDOW.

2) ALL WOOD BUCKS LESS THAN 1-1/2" THICK ARE TO BE CONSIDERED 1X INSTALLATIONS. 1X WOOD BUCKS ARE OPTIONAL. UNIT MAY BE INSTALLED DIRECTLY TO SUBSTRATE. WOOD BUCKS DEPICTED AS 2X ARE 1-1/2" THICK OR GREATER. 1X AND 2X BUCKS (WHEN USED) SHALL BE DESIGNED TO PROPERLY TRANSFER LOADS TO THE STRUCTURE. WOOD BUCK DESIGN AND INSTALLATION IS THE RESPONSIBILITY OF THE ENGINEER OR ARCHITECT OF RECORD. MAXIMUM SHIM THICKNESS TO BE 1/4".

ANTHONY LYNN MILLER
LICENSE
No. 58705
3/23/12
STATE OF FLORIDA
PROFESSIONAL ENGINEER
A. LYNN MILLER, P.E.
P.E.# 58705

PGT®
1070 TECHNOLOGY DRIVE
N. VENICE, FL 34275
P.O. BOX 1529
NOKOMIS, FL 34274
CERT. OF AUTH. #29296

Revised By:	Date:	Revision:
Revised By:	Date:	Revision:

Approved as complying with the Florida Building Code
Date 02/09/2012
NOA# 11-1201.04
Miami Dade Product Control
By

Description: INSTALLATION DETAILS, STD MR	Drawn By: J ROSOWSKI
Title: HORIZONTAL ROLLER WINDOW DETAILS	Date: 12/01/11

Series/Model:	Scale:	Sheet:	Drawing No.	Rev:
HR-210	NTS	5 OF 8	MD-HR210-01	

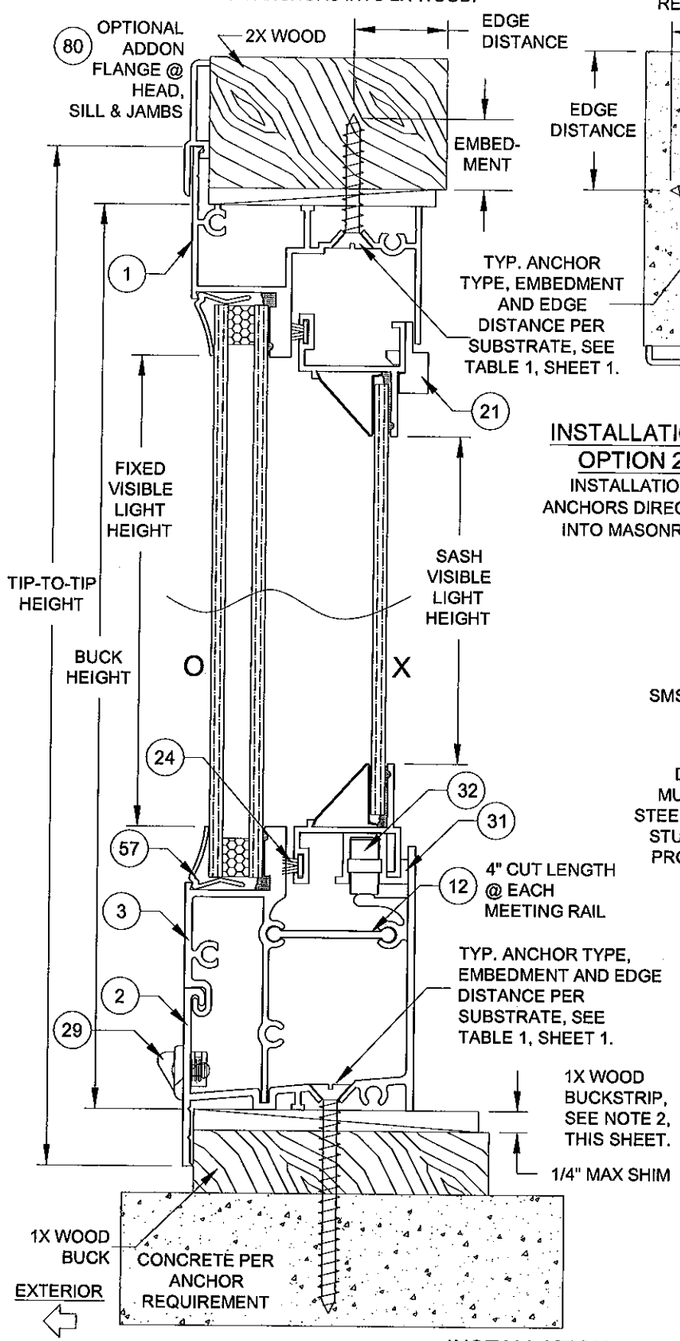

VERTICAL SECTION B-B

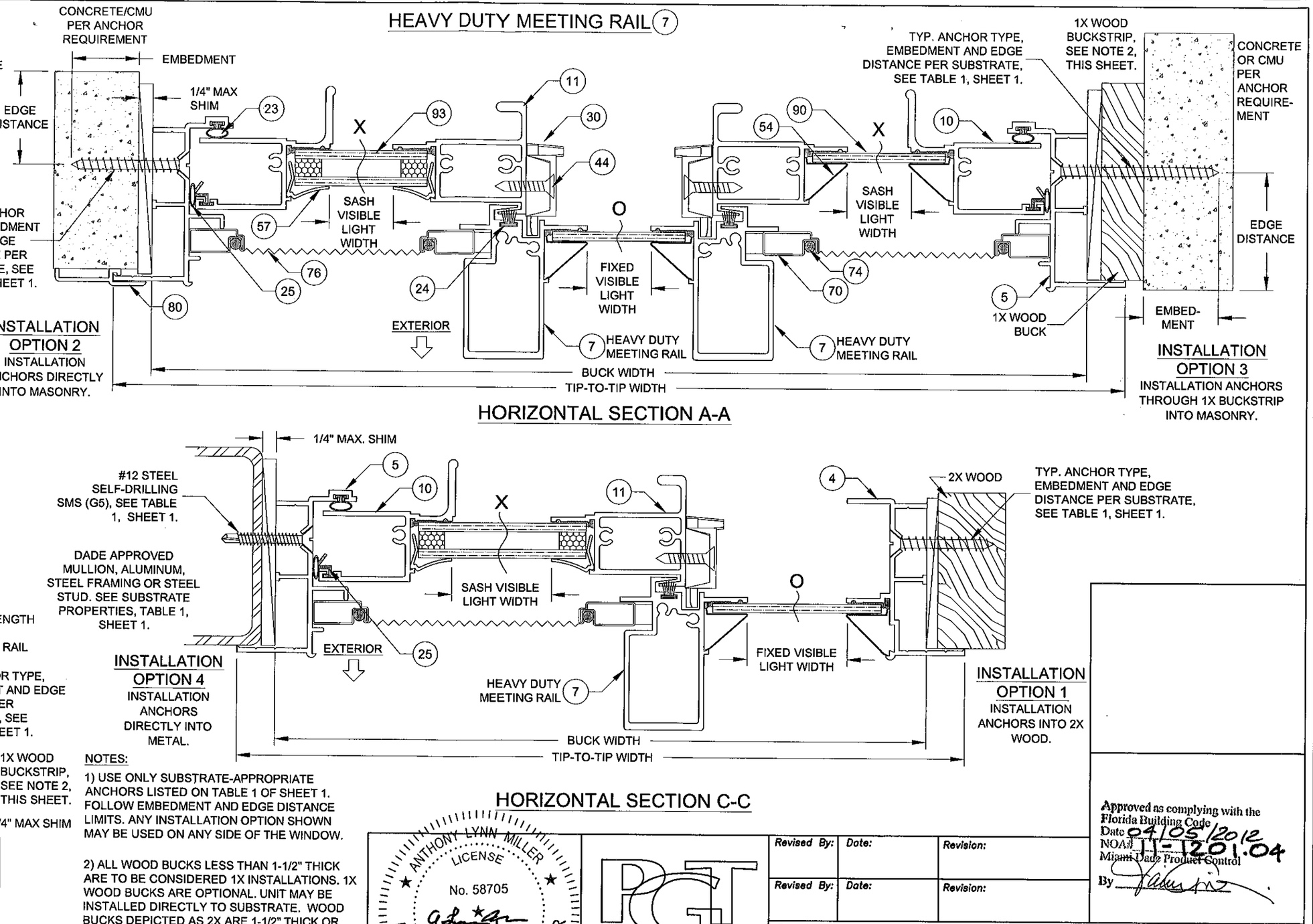

HORIZONTAL SECTION A-A

HORIZONTAL SECTION C-C

NOTES:

1) USE ONLY SUBSTRATE-APPROPRIATE ANCHORS LISTED ON TABLE 1 OF SHEET 1. FOLLOW EMBEDMENT AND EDGE DISTANCE LIMITS. ANY INSTALLATION OPTION SHOWN MAY BE USED ON ANY SIDE OF THE WINDOW.

2) ALL WOOD BUCKS LESS THAN 1-1/2" THICK ARE TO BE CONSIDERED 1X INSTALLATIONS. 1X WOOD BUCKS ARE OPTIONAL. UNIT MAY BE INSTALLED DIRECTLY TO SUBSTRATE. WOOD BUCKS DEPICTED AS 2X ARE 1-1/2" THICK OR GREATER. 1X AND 2X BUCKS (WHEN USED) SHALL BE DESIGNED TO PROPERLY TRANSFER LOADS TO THE STRUCTURE. WOOD BUCK DESIGN AND INSTALLATION IS THE RESPONSIBILITY OF THE ENGINEER OR ARCHITECT OF RECORD. MAXIMUM SHIM THICKNESS TO BE 1/4".

ANTHONY LYNN MILLER
LICENSE
No. 58705
STATE OF FLORIDA
PROFESSIONAL ENGINEER
3/23/12

A. LYNN MILLER, P.E.
P.E.# 58705

PGT®

1070 TECHNOLOGY DRIVE
N. VENICE, FL 34275
P.O. BOX 1529
NOKOMIS, FL 34274

CERT. OF AUTH. #29296

Revised By:	Date:	Revision:
Revised By:	Date:	Revision:

Approved as complying with the Florida Building Code
Date 04/05/2012
NOA# 11-1201.04
Miami-Dade Product Control
By

Description:	Drawn By:
INSTALLATION DETAILS, HD MR	J ROSOWSKI

Title:	Date:
HORIZONTAL ROLLER WINDOW DETAILS	12/01/11

Series/Model:	Scale:	Sheet:	Drawing No.	Rev:
HR-210	NTS	6 OF 8	MD-HR210-01	

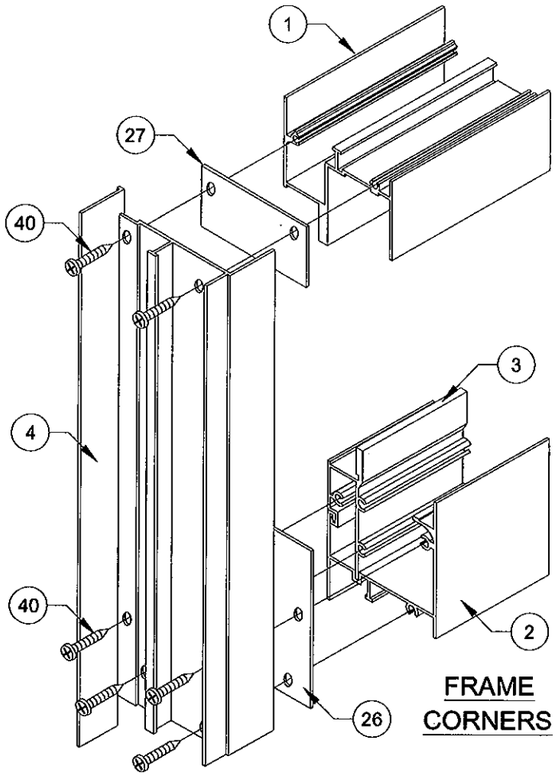

FRAME CORNERS

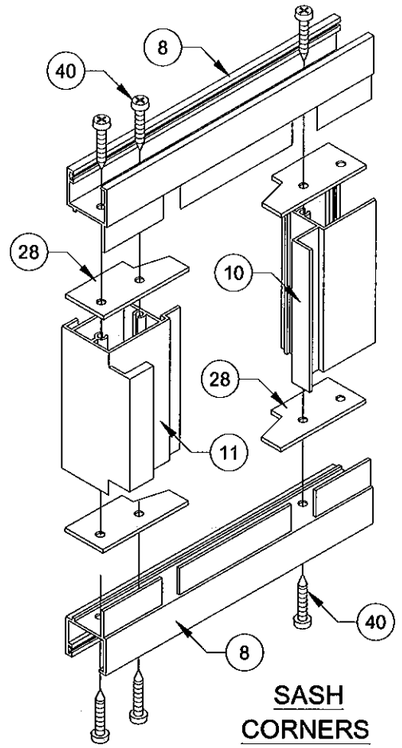

SASH CORNERS

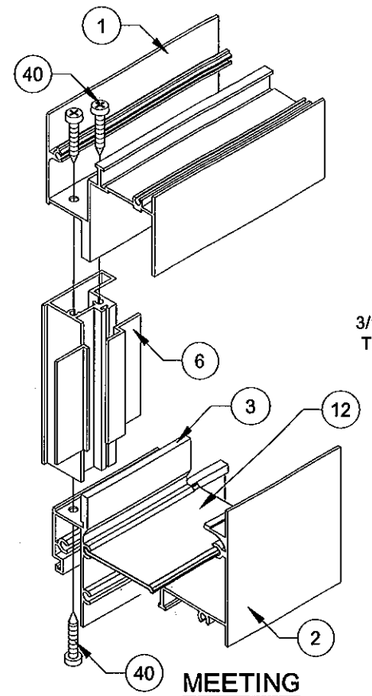

MEETING RAIL

ASSEMBLY DETAILS

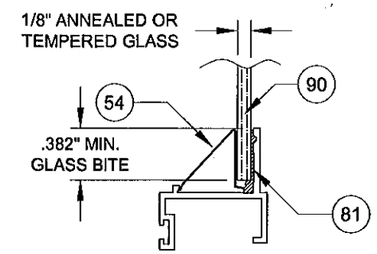

1/8" GLAZING DETAIL

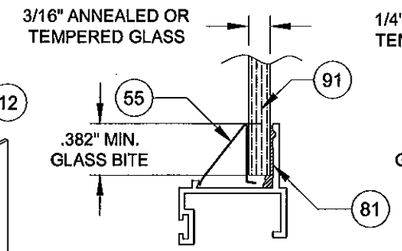

3/16" GLAZING DETAIL

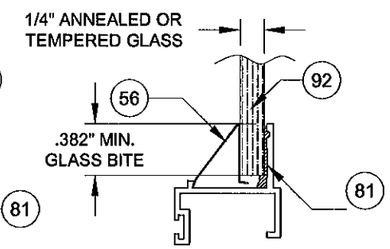

1/4" GLAZING DETAIL

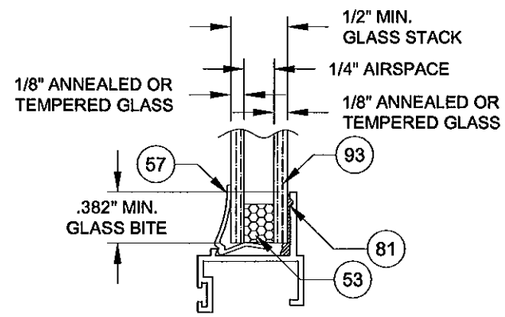

1/2" I.G. GLAZING DETAIL
1/4" AIRSPACE

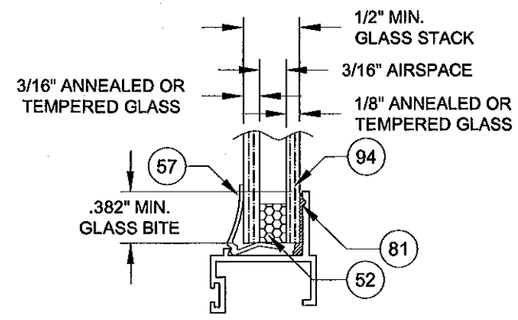

1/2" I.G. GLAZING DETAIL
3/16" AIRSPACE

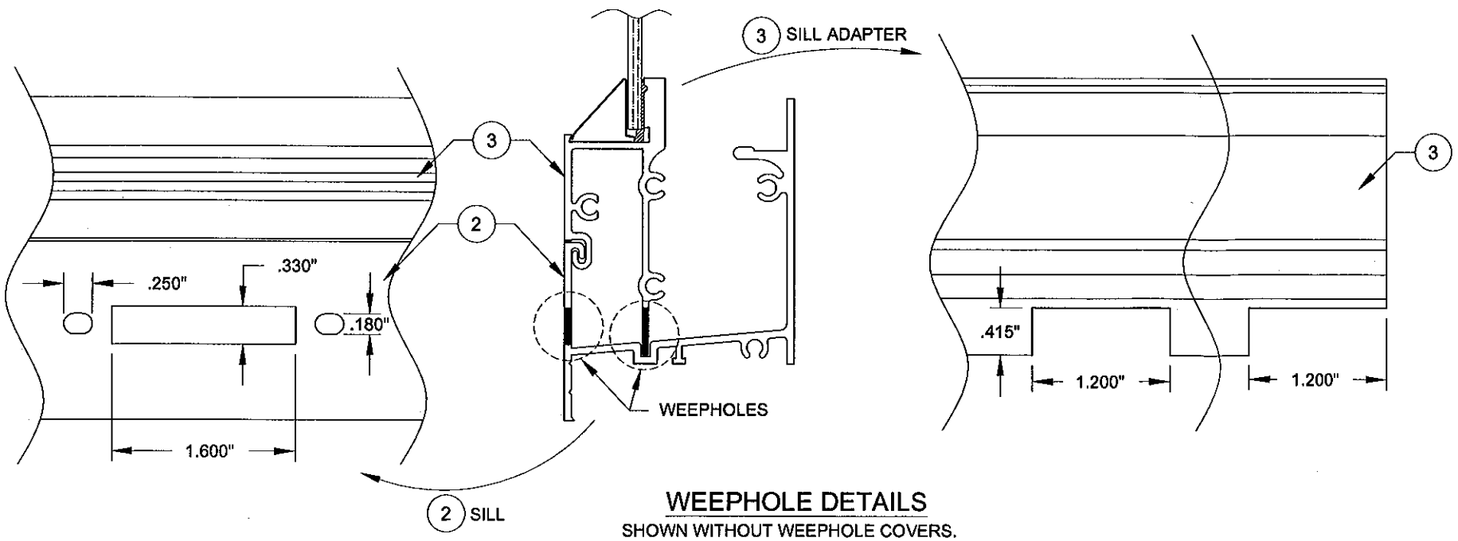

WEEPHOLE DETAILS
SHOWN WITHOUT WEEPHOLE COVERS.
SEE SHEET 1 FOR QUANTITY AND SPACING

Approved as complying with the Florida Building Code
Date 04/06/2012
NOA# 11-1201.04
Miami Dade Product Control
By

Revised By:	Date:	Revised By:	Date:
Revision:		Revision:	
Drawn By: J ROSOWSKI		Drawn Date: 12/01/11	
Description: CORNER ASSEMBLY & GLASS DETAILS			
Title: HORIZONTAL ROLLER WINDOW DETAILS			
Series/Model: HR-210	Scale: NTS	Sheet: 7 OF 8	Drawing No. MD-HR210-01
			Rev:

PGT®
1070 TECHNOLOGY DRIVE
N. VENICE, FL 34275
P.O. BOX 1529
NOKOMIS, FL 34274
CERT. OF AUTH. #29296

ANTHONY LYNN MILLER LICENSE No. 58705 STATE OF FLORIDA PROFESSIONAL ENGINEER
3/23/12
A. LYNN MILLER, P.E.
P.E.# 58705

TABLE 7:

Item	Dwg #	Part #	Description	Material
1	215B	6215W	Frame Head	6063-T6
2	264	6264W	Frame Sill	6063-T5
3	265	6265BW	Sill Adapter	6063-T6
4	218A	6218W	Frame Jamb (Fixed)	6063-T6
5	219	61088W	Frame Jamb (Operable)	6063-T5
6	220B	6220W	Fixed Meeting Rail	6063-T6
7	267	6267W	Heavy Duty Fixed Meeting Rail	6063-T6
8	223A	6223W	Sash Top & Bottom Rail	6063-T6
9	223A	6223W	Sash Bottom Rail	6063-T6
10	221B	6221BW	Sash Side Rail	6063-T6
11	222	6222W	Sash Meeting Rail	6063-T6
12	270	6270W	Dogbone Reinforcement	6063-T6
13	2785	62785W	Sash Stop	6063-T5
20	4080	74080BK	Meeting Rail Sweep Latch Plug	Rigid PVC
21	242	42105W	Sash Top Guide (Anti-rack)	Rigid PVC
22	227	42114W	End Cap	Rigid PVC
23	1213	6Q200K	.190" X .200" Q-lon Wstp. (Frame)	Flex PVC 70
24	4066	64066G	.187" X .230" Fin Wstp.	
25	1003C	66601K	Bulb Vinyl Wstp. (Sash)	Flex PVC 70
26	275C	70275CK	Frame Sill Gasket	Polyethylene
27	273A	70273AK	Frame Head Gasket	Polyethylene
28	280	70280BK	Sash Gaskets	Polyethylene
29		7HRKITW	Weephole Cover	Plastic
30	1096	71096W	Sweep Latch	Cast Zinc
31	225	42112N	Roller Housing & Guide	Vinyl
32	226	7BRWHL2	Roller	Brass
40	1155	781PQA	#8 X 1" QUAD Pn SMS	Steel
41	1155-1	781PQX	#8 X 1" Sq. Pn. SMS	410 SS
42		781PSTX	#8 X 1" Sq. Pn. Twin Fast SMS	410 SS
43		78X38PSA	#8 X .375" Sq. Pn. SMS	Steel
44	1016	7858WW	#8 X .625" Ph. Fl. SMS	Steel
50	1265-3	712653K	Setting Block 3/32" X 1/4" X 1"	EPDM
51	1267	71267N	Setting Block 1/8" X 1/2" X 1"	EPDM
52		6DURAK316	Duraseal - 3/16" (IG only)	
53		6DURAK14	Duraseal - 1/4" (IG only)	
54	1625	61625W	1/8" Bead	Aluminum
55	2719	65016W	3/16" Bead	Aluminum
56	1263	65133W	1/4" Bead	Aluminum
57	1253	6VT48W	I.G. Bead	Rigid PVC
70	1014	61014FW	Screen Frame	Aluminum
71	1631	47041W	Screen Corner Key No Ring	Vinyl
72	1630	47042W	Screen Corner Key with Ring	Vinyl
73	320	7320SPNG	Screen Spring	Spring Steel
74	1624	61624K	Screen Spline - .135" Dia. Foam	Rubber
75	1635	61635K	Screen Spline - .135" Dia. Hard	Rubber
76			Screen Cloth	Fiberglass
80	134	66615W	Add-on Flange (Optional)	6063-T6
81			Dow Corning 899 Silicone Glazing Sealant or Equiv.	
90			1/8" Annealed or Tempered Glass	
91			3/16" Annealed or Tempered Glass	
92			1/4" Annealed or Tempered Glass	
93			1/8"- 1/4" Air - 1/8" An. or Temp. I.G.	
94			1/8"- 3/16" Air - 3/16" An. or Temp. I.G.	

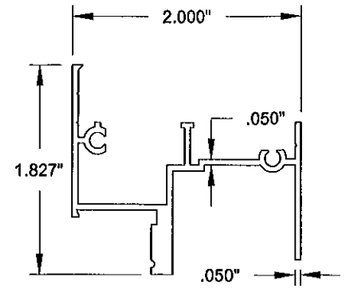

1 FRAME HEAD
6063-T6 ALUMINUM

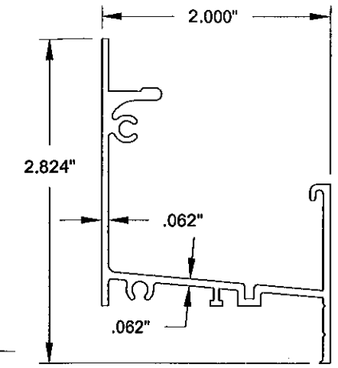

2 FRAME SILL
6063-T5 ALUMINUM

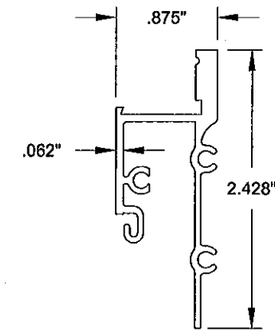

3 SILL ADAPTER
6063-T6 ALUMINUM

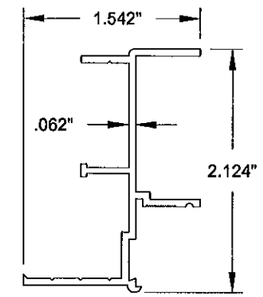

4 FRAME JAMB (FIXED)
6063-T6 ALUMINUM

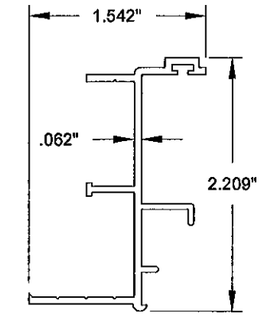

5 FRAME JAMB (OPERABLE)
6063-T5 ALUMINUM

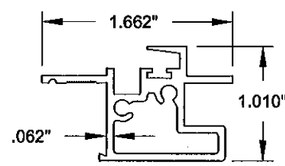

6 FIXED MEETING RAIL
6063-T6 ALUMINUM

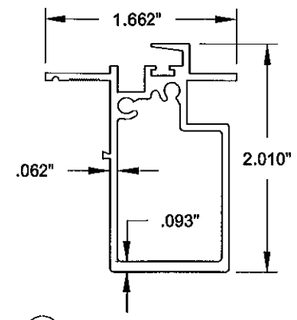

7 HD FIXED MEETING RAIL
6063-T6 ALUMINUM

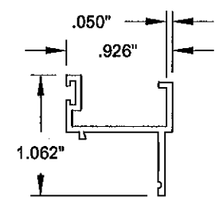

8 SASH TOP & BOTTOM RAIL
6063-T6 ALUMINUM

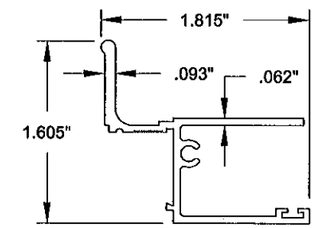

10 SASH SIDE RAIL
6063-T6 ALUMINUM

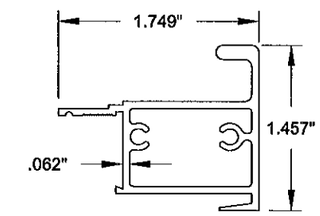

11 SASH MEETING RAIL
6063-T6 ALUMINUM

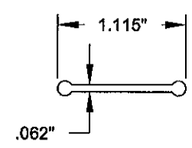

12 DOGBONE REINFORCEMENT
6063-T6 ALUMINUM

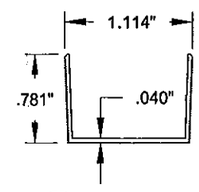

13 SASH STOP
6063-T5 ALUMINUM

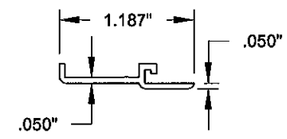

80 ADDON FLANGE
6063-T6 ALUMINUM

ANTHONY LYNN MILLER
LICENSE
No. 58705
STATE OF FLORIDA
PROFESSIONAL ENGINEER
3/23/12

A. LYNN MILLER, P.E.
P.E.# 58705

PGT®

1070 TECHNOLOGY DRIVE
N. VENICE, FL 34275
P.O. BOX 1529
NOKOMIS, FL 34274

CERT. OF AUTH. #29296

Revised By:	Date:	Revision:
Revised By:	Date:	Revision:

Approved as complying with the Florida Building Code
Date 04/05/2012
NOA# 11-1201.04
Miami Dade Product Control
By

Description: BOM & PART DETAILS	Drawn By: J ROSOWSKI
Title: HORIZONTAL ROLLER WINDOW DETAILS	Date: 12/01/11

Series/Model:	Scale:	Sheet:	Drawing No.	Rev:
HR-210	NTS	8 OF 8	MD-HR210-01	