MIAMI-DADE COUNTY
DEPARTMENT OF PERMITTING, ENVIRONMENT, AND REGULATORY AFFAIRS (PERA)
BOARD AND CODE ADMINISTRATION DIVISION

MIAMI-DADE COUNTY
PRODUCT CONTROL SECTION
11805 SW 26 Street, Room 208
Miami, Florida 33175-2474
T (786) 315-2590 F (786) 315-2599
www.miamidade.gov/pera/

NOTICE OF ACCEPTANCE (NOA)

Pino's Window Corporation
6860 NW 75th Street
Medley, FL 33166

SCOPE:

This NOA is being issued under the applicable rules and regulations governing the use of construction materials. The documentation submitted has been reviewed and accepted by Miami-Dade County PERA - Product Control Section to be used in Miami Dade County and other areas where allowed by the Authority Having Jurisdiction (AHJ).

This NOA shall not be valid after the expiration date stated below. The Miami-Dade County Product Control Section (In Miami Dade County) and/or the AHJ (in areas other than Miami Dade County) reserve the right to have this product or material tested for quality assurance purposes. If this product or material fails to perform in the accepted manner, the manufacturer will incur the expense of such testing and the AHJ may immediately revoke, modify, or suspend the use of such product or material within their jurisdiction. PERA reserves the right to revoke this acceptance, if it is determined by Miami-Dade County Product Control Section that this product or material fails to meet the requirements of the applicable building code.

This product is approved as described herein, and has been designed to comply with the Florida Building Code, including the High Velocity Hurricane Zone.

DESCRIPTION: Series "FWS-300" Aluminum Horizontal Sliding Window - N.I.

APPROVAL DOCUMENT: Drawing No. **W11-54**, titled "Series FWS-300 Alum Horiz. Sliding Wdw. (N.I.)," sheets 1 through 7 of 7, dated 11/15/11 with revision A dated 02/27/12, prepared by Al-Farooq Corporation, signed and sealed by Javad Ahmad, P.E., bearing the Miami-Dade County Product Control Approval stamp with the Notice of Acceptance number and approval date by the Miami-Dade County Product Control Section.

MISSILE IMPACT RATING: None.

LABELING: Each unit shall bear a permanent label with the manufacturer's name or logo, city, state, model/series, and following statement: "Miami-Dade County Product Control Approved", unless otherwise noted herein.

RENEWAL of this NOA shall be considered after a renewal application has been filed and there has been no change in the applicable building code negatively affecting the performance of this product.

TERMINATION of this NOA will occur after the expiration date or if there has been a revision or change in the materials, use, and/or manufacture of the product or process. Misuse of this NOA as an endorsement of any product, for sales, advertising or any other purposes shall automatically terminate this NOA. Failure to comply with any section of this NOA shall be cause for termination and removal of NOA.

ADVERTISEMENT: The NOA number preceded by the words Miami-Dade County, Florida, and followed by the expiration date may be displayed in advertising literature. If any portion of the NOA is displayed, then it shall be done in its entirety.

INSPECTION: A copy of this entire NOA shall be provided to the user by the manufacturer or its distributors and shall be available for inspection at the job site at the request of the Building Official.

This NOA consists of this page 1 and evidence page E-1, as well as approval document mentioned above.

The submitted documentation was reviewed by **Manuel Perez, P.E.**

MIAMI-DADE COUNTY APPROVED

Pino's Window Corporation

NOTICE OF ACCEPTANCE: EVIDENCE SUBMITTED

A. **DRAWINGS**

1. Manufacturer's die drawings and sections.
2. Drawing No. **W11-54**, titled "Series FWS-300 Alum Horiz. Sliding Wdw. (N.I.)", sheets 1 through 7 of 7, dated 11/15/11 with revision A dated 02/27/12, prepared by Al-Farooq Corporation, signed and sealed by Javad Ahmad, P.E.

B. **TESTS**

1. Test reports on: 1) Air Infiltration Test, per FBC, TAS 202-94
   2) Uniform Static Air Pressure Test, Loading per FBC, TAS 202-94
   3) Water Resistance Test, per FBC, TAS 202-94
   4) Forced Entry Test, per FBC 2411.3.2.1, and TAS 202-94

   along with marked-up drawings and installation diagram of a series FWS 300 aluminum horizontal sliding window, glazed with $^{3}/_{16}$" ann. and temp. glass, and ¼" ann. glass, prepared by Fenestration Testing Laboratory, Inc., Test Report No. **FTL–6630**, dated 10/03/11, signed and sealed by Marlin D. Brinson, P. E.

C. **CALCULATIONS**

1. Anchor verification calculations and structural analysis, complying with FBC–2010, prepared by Al–Farooq Corporation, dated 11/18/11, signed and sealed by Javad Ahmad, P. E.
2. Glazing complies with ASTM E1300-04

D. **QUALITY ASSURANCE**

1. Miami-Dade Department of Permitting, Environment, and Regulatory Affairs (PERA).

E. **MATERIAL CERTIFICATIONS**

1. None.

F. **STATEMENTS**

1. Statement letter of conformance, complying with FBC-2010 and of no financial interest, dated 11/18/11, signed and sealed by Javad Ahmad, P.E.
2. Test Proposal issued by BNC, Product Control Section, dated November 17, 2010, signed by Manuel Perez, P. E.

G. **OTHERS**

1. None.

Manuel Perez, P.E.
Product Control Examiner
NOA No. 11-1206.01
Expiration Date: March 08, 2017
Approval Date: March 08, 2012

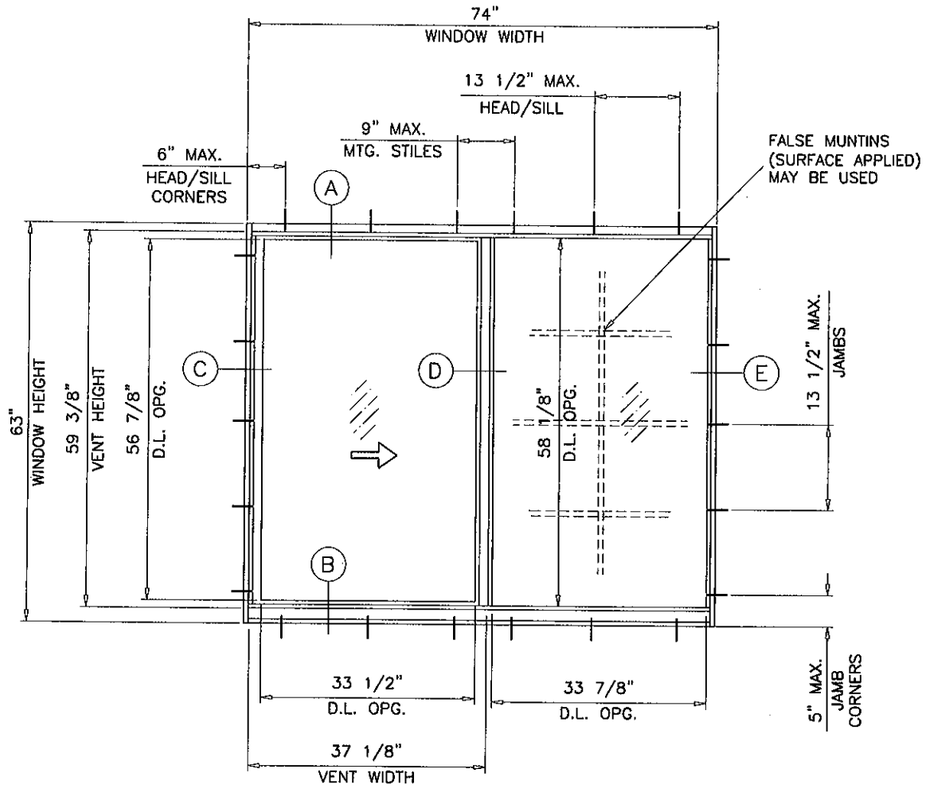

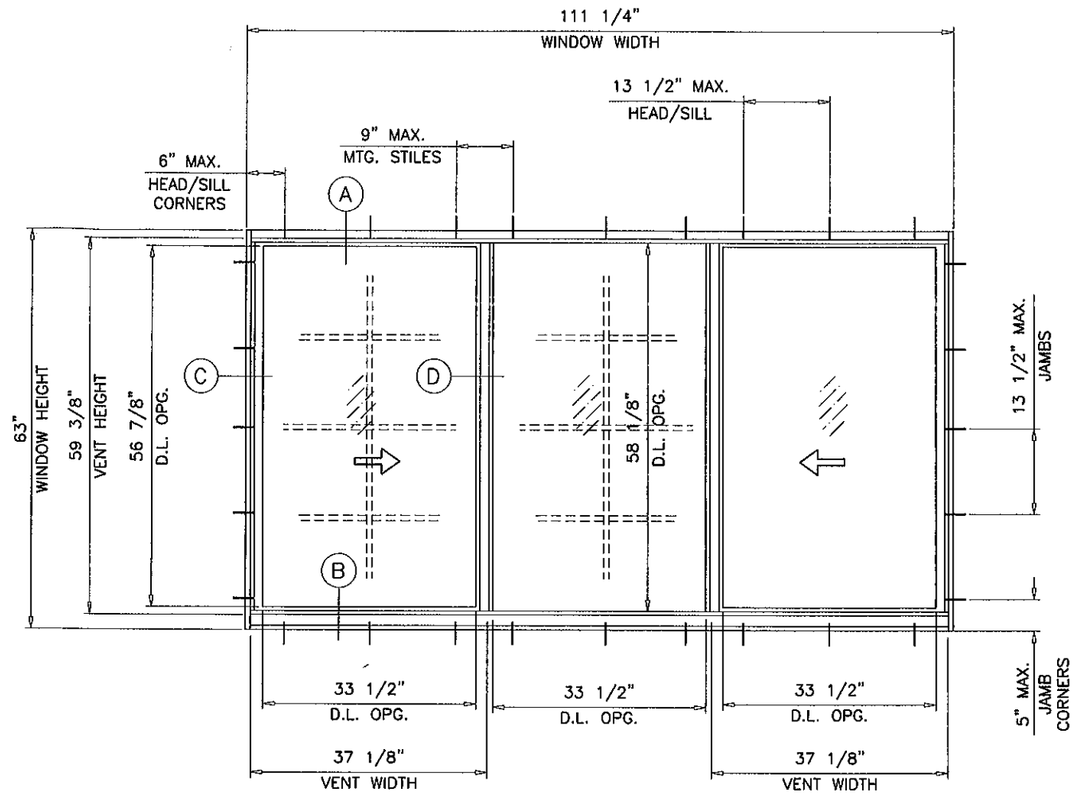

TYPICAL ELEVATIONS

SERIES FWS-300
ALUMINUM HORIZONTAL SLIDING WINDOW

DESIGN LOAD RATINGS FOR THESE WINDOWS TO BE AS PER CHARTS SHOWN ON SHEETS 2 & 3.

APPROVAL APPLIES TO SINGLE HORIZONTAL SLIDING WINDOWS, ALSO COMBINATIONS OF H.S./H.S. OR HORIZONTAL SLIDING WITH OTHER WINDOW TYPES IN MODULES OF TWO OR MORE WINDOWS USING MIAMI-DADE COUNTY APPROVED MULLIONS IN BETWEEN. LOWER DESIGN PRESSURE FROM WINDOWS OR MULLION APPROVAL WILL APPLY TO ENTIRE SYSTEM.

THIS PRODUCT HAS BEEN DESIGNED AND TESTED TO COMPLY WITH THE REQUIREMENTS OF THE FLORIDA BUILDING CODE INCLUDING HIGH VELOCITY HURRICANE ZONE (HVHZ).

WOOD BUCKS BY OTHERS, MUST BE ANCHORED PROPERLY TO TRANSFER LOADS TO THE STRUCTURE.

ANCHORS SHALL BE AS LISTED, SPACED AS SHOWN ON DETAILS, ANCHORS EMBEDMENT TO BASE MATERIAL SHALL BE BEYOND WALL DRESSING OR STUCCO.

ANCHORING OR LOADING CONDITIONS NOT SHOWN IN THESE DETAILS ARE NOT PART OF THIS APPROVAL.

A LOAD DURATION INCREASE IS USED IN DESIGN OF ANCHORS INTO WOOD ONLY.

MATERIALS INCLUDING BUT NOT LIMITED TO STEEL/METAL SCREWS, THAT COME INTO CONTACT WITH OTHER DISSIMILAR MATERIALS SHALL MEET THE REQUIREMENTS OF THE FLORIDA BLDG. CODE SECTION 2003.8.4.

WINDOWS NOT RATED FOR IMPACT.
INSTALLATION OF THIS PRODUCT IN THE HVHZ AREA REQUIRES THE USE OF APPROVED SHUTTERS OR EXTERNAL PROTECTION DEVICES COMPLYING WITH HVHZ REQUIREMENTS.
INSTALLATION OF THIS SYSTEM OUTSIDE THE HVHZ AREA SHALL MEET THE APPLICABLE REQUIREMENTS FOR WIND BORNE DEBRIS PROTECTION.

Engr: JAVAD AHMAD
CIVIL
FLA. PE # 70592
C.A.N. 3538

MONOLITHIC GLASS
NON IMPACT

Approved as complying with the Florida Building Code
Date MARCH 8, 2012
NOA# 11-1206.01
Miami Dade Product Control
By Manuel Perez

FEB 27 2012

AL-FAROOQ CORPORATION
ENGINEERS & PRODUCT DEVELOPMENT
1235 S.W. 87 AVE
MIAMI, FLORIDA 33174
TEL. (305) 264-8100 FAX. (305) 262-6978
COMP-ANL\W11-54PWC

SERIES FWS-300 ALUM HORIZ. SLIDING WDW. (N.I.)

PINO'S WINDOW CORP.
6860 N.W. 75TH STREET
MEDLEY, FL. 33166
TEL. (305) 888-9946 FAX (305) 888-8079

revisions:

no	date	by	description
A	02.27.12		REV. PER PERA COMMENTS

date: 11-15-11
scale: 1/2"=1'-0"
dr. by: HAMID
chk. by:

drawing no.
W11-54

DESIGN LOAD CAPACITY – PSF (XO OR OX SIZES)

WINDOW DIMS.		A	ANCHORS TYPE 'A' & 'B'				ANCHORS 'A'		ANCHORS 'B'	
			3/16" ANN. GLASS		1/4" ANN. GLASS		3/16" TEMP. GLASS		3/16" TEMP. GLASS	
WIDTH	HEIGHT		EXT.(+)	INT.(–)	EXT.(+)	INT.(–)	EXT.(+)	INT.(–)	EXT.(+)	INT.(–)
26–1/2"	26" (2)	4	66.7	125.0	66.7	125.0	66.7	125.0	66.7	125.0
37"		4	66.7	125.0	66.7	125.0	66.7	125.0	66.7	125.0
53–1/8"		6	66.7	125.0	66.7	125.0	66.7	125.0	66.7	125.0
74"		6	66.7	120.8	66.7	125.0	66.7	125.0	66.7	125.0
26–1/2"	38–3/8" (3)	4	66.7	125.0	66.7	125.0	66.7	125.0	66.7	125.0
37"		4	66.7	125.0	66.7	125.0	66.7	125.0	66.7	125.0
53–1/8"		6	66.7	111.2	66.7	125.0	66.7	125.0	66.7	125.0
74"		6	66.7	81.5	66.7	106.4	66.7	125.0	66.7	125.0
26–1/2"	50–5/8" (4)	4	66.7	125.0	66.7	125.0	66.7	125.0	66.7	125.0
37"		4	66.7	96.8	66.7	125.0	66.7	125.0	66.7	125.0
53–1/8"		6	66.7	74.7	66.7	99.6	66.7	116.2	66.7	116.2
74"		6	62.3	62.3	66.7	81.5	66.7	98.8	66.7	98.8
26–1/2"	63" (5)	4	66.7	99.2	66.7	125.0	66.7	125.0	66.7	125.0
37"		4	66.7	74.5	66.7	99.3	66.7	112.1	66.7	112.1
53"		6	56.1	56.1	66.7	74.8	66.7	84.9	66.7	84.9
74"		6	45.0	45.0	60.0	60.0	66.7	75.0	66.7	68.8
24"	24" (2)	4	66.7	125.0	66.7	125.0	66.7	125.0	66.7	125.0
36"		4	66.7	125.0	66.7	125.0	66.7	125.0	66.7	125.0
48"		4	66.7	125.0	66.7	125.0	66.7	125.0	66.7	125.0
60"		6	66.7	125.0	66.7	125.0	66.7	125.0	66.7	125.0
72"		6	66.7	125.0	66.7	125.0	66.7	125.0	66.7	125.0
24"	36" (3)	4	66.7	125.0	66.7	125.0	66.7	125.0	66.7	125.0
36"		4	66.7	125.0	66.7	125.0	66.7	125.0	66.7	125.0
48"		4	66.7	125.0	66.7	125.0	66.7	125.0	66.7	125.0
60"		6	66.7	108.0	66.7	125.0	66.7	125.0	66.7	125.0
72"		6	66.7	89.7	66:7	117.8	66.7	125.0	66.7	125.0
24"	48" (4)	4	66.7	125.0	66.7	125.0	66.7	125.0	66.7	125.0
36"		4	66.7	105.5	66.7	125.0	66.7	125.0	66.7	125.0
48"		4	66.7	85.8	66.7	114.3	66.7	125.0	66.7	125.0
60"		6	66.7	74.8	66.7	99.8	66.7	118.2	66.7	118.2
72"		6	66.7	68.6	66.7	88.4	66.7	109.7	66.7	109.7
24"	60" (5)	4	66.7	114.3	66.7	125.0	66.7	125.0	66.7	125.0
36"		4	66.7	80.7	66.7	107.6	66.7	121.9	66.7	121.9
48"		4	64.3	64.3	66.7	85.8	66.7	97.6	66.7	97.6
60"		6	54.9	54.9	66.7	73.2	66.7	83.8	66.7	83.8
72"		6	49.0	49.0	65.3	65.3	66.7	75.3	66.7	75.3

A = NO. OF ANCHORS PER HEAD & SILL
( ) = NO. OF ANCHORS PER JAMB

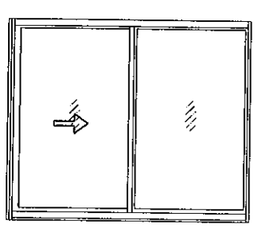

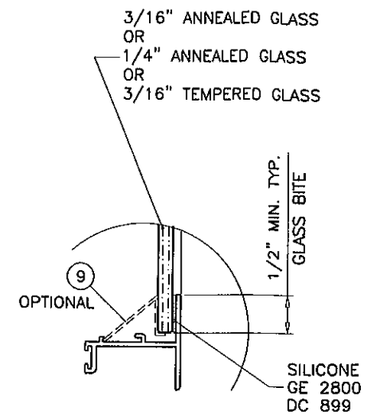

GLAZING DETAIL

NOTE:
GLASS CAPACITIES ON THIS SHEET ARE BASED ON ASTM E1300–04 (3 SEC. GUSTS) AND FLORIDA BUILDING COMMISSION DECLARATORY STATEMENT DCA05–DEC–219

Engr: JAVAD AHMAD
CIVIL
FLA. PE # 70592
C.A.N. 3538

FEB 27 2012
Approved as complying with the Florida Building Code
Date MARCH 8, 2012
NOA# 11-1206.01
Miami Dade Product Control
By Manuel Perez

AL-FAROOQ CORPORATION
ENGINEERS & PRODUCT DEVELOPMENT
1235 S.W. 87 AVE
MIAMI, FLORIDA 33174
TEL. (305) 264-8100 FAX. (305) 262-6978

COMP–ANL\W11–54PWC

SERIES FWS–300 ALUM HORIZ. SLIDING WDW. (N.I.)

PINO'S WINDOW CORP.
6860 N.W. 75TH STREET
MEDLEY, FL. 33166
TEL. (305) 888–9946 FAX (305) 888–8079

revisions:

no	date	by	description
A	02.27.12		NO CHANGE THIS SHEET

date: 11–15–11
scale: 1/2" = 1"
dr. by: HAMID
chk. by:

drawing no.
W11–54

DESIGN LOAD CAPACITY – PSF (XOX SIZES)

WINDOW DIMS.		A	ANCHORS TYPE 'A' & 'B'				ANCHORS 'A'		ANCHORS 'B'	
			3/16" ANN. GLASS		1/4" ANN. GLASS		3/16" TEMP. GLASS		3/16" TEMP. GLASS	
WIDTH	HEIGHT		EXT.(+)	INT.(−)	EXT.(+)	INT.(−)	EXT.(+)	INT.(−)	EXT.(+)	INT.(−)
74"	26" (2)	7	66.7	125.0	66.7	125.0	66.7	125.0	66.7	125.0
106-1/4"		9	66.7	125.0	66.7	125.0	66.7	125.0	66.7	125.0
111"		9	66.7	121.7	66.7	125.0	66.7	125.0	66.7	125.0
74"	38-3/8" (3)	7	66.7	115.3	66.7	125.0	66.7	125.0	66.7	125.0
106-1/4"		9	66.7	86.3	66.7	112.8	66.7	125.0	66.7	125.0
111"		9	66.7	81.9	66.7	106.9	66.7	125.0	66.7	125.0
74"	50-5/8" (4)	7	66.7	78.4	66.7	104.6	66.7	121.7	66.7	121.7
106-1/4"		9	63.6	63.6	66.7	84.6	66.7	100.4	66.7	100.4
111"		9	62.3	62.3	66.7	81.8	66.7	98.8	66.7	98.8
74"	63" (5)	7	59.3	59.3	66.7	79.0	66.7	89.6	66.7	89.6
106-1/4"		9	46.2	46.2	61.6	61.6	66.7	75.0	66.7	70.5
111"		9	45.0	45.0	60.0	60.0	66.7	75.0	66.7	68.8
72"	24" (2)	7	66.7	125.0	66.7	125.0	66.7	125.0	66.7	125.0
84"		9	66.7	125.0	66.7	125.0	66.7	125.0	66.7	125.0
96"		9	66.7	125.0	66.7	125.0	66.7	125.0	66.7	125.0
108"		9	66.7	125.0	66.7	125.0	66.7	125.0	66.7	125.0
72"	36" (3)	7	66.7	125.0	66.7	125.0	66.7	125.0	66.7	125.0
84"		9	66.7	116.5	66.7	125.0	66.7	125.0	66.7	125.0
96"		9	66.7	101.6	66.7	125.0	66.7	125.0	66.7	125.0
108"		9	66.7	90.1	66.7	118.4	66.7	125.0	66.7	125.0
72"	48" (4)	7	66.7	85.8	66.7	114.3	66.7	125.0	66.7	125.0
84"		9	66.7	77.8	66.7	103.8	66.7	122.4	66.7	122.4
96"		9	66.7	72.4	66.7	96.5	66.7	114.7	66.7	114.7
108"		9	66.7	68.6	66.7	88.8	66.7	109.7	66.7	109.7
72"	60" (5)	7	64.3	64.3	66.7	85.8	66.7	97.6	66.7	97.6
84"		9	57.5	57.5	66.7	76.7	66.7	87.6	66.7	87.6
96"		9	52.6	52.6	66.7	70.2	66.7	80.5	66.7	80.5
108"		9	49.0	49.0	65.3	65.3	66.7	75.3	66.7	75.3

A = NO. OF ANCHORS PER HEAD & SILL
( ) = NO. OF ANCHORS PER JAMB

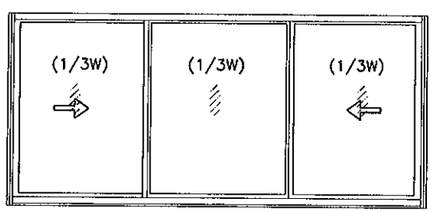

OPERATING VENTS TO BE 1/3 OF THE WINDOW WIDTH

DESIGN LOAD CAPACITY – PSF (XOX SIZES)

WINDOW DIMS.		A	ANCHORS TYPE 'A' & 'B'				ANCHORS 'A'		ANCHORS 'B'	
			3/16" ANN. GLASS		1/4" ANN. GLASS		3/16" TEMP. GLASS		3/16" TEMP. GLASS	
WIDTH	HEIGHT		EXT.(+)	INT.(−)	EXT.(+)	INT.(−)	EXT.(+)	INT.(−)	EXT.(+)	INT.(−)
74"	26" (2)	7	66.7	125.0	66.7	125.0	66.7	125.0	66.7	125.0
106-1/4"		9	66.7	82.8	66.7	121.5	66.7	125.0	66.7	125.0
111"		9	66.7	79.4	66.7	117.0	66.7	125.0	66.7	125.0
74"	38-3/8" (3)	7	66.7	86.8	66.7	113.5	66.7	125.0	66.7	125.0
106-1/4"		9	60.8	60.8	66.7	78.0	66.7	125.0	66.7	125.0
111"		9	57.5	57.5	66.7	73.9	66.7	125.0	66.7	125.0
74"	50-5/8" (4)	7	65.5	65.5	66.7	85.0	66.7	118.8	66.7	118.8
74"	63" (5)	7	48.4	48.4	63.9	63.9	66.7	85.2	66.7	85.2
72"	24" (2)	7	66.7	125.0	66.7	125.0	66.7	125.0	66.7	125.0
84"		9	66.7	121.1	66.7	125.0	66.7	125.0	66.7	125.0
96"		9	66.7	104.4	66.7	125.0	66.7	125.0	66.7	125.0
108"		9	66.7	94.1	66.7	125.0	66.7	125.0	66.7	125.0
72"	36" (3)	7	66.7	94.1	66.7	124.3	66.7	125.0	66.7	125.0
84"		9	66.7	82.4	66.7	107.3	66.7	125.0	66.7	125.0
96"		9	66.7	71.4	66.7	92.8	66.7	125.0	66.7	125.0
108"		9	61.4	61.4	66.7	80.1	66.7	125.0	66.7	125.0
72"	48" (4)	7	66.7	71.2	66.7	92.8	66.7	125.0	66.7	125.0
84"		9	63.6	63.6	66.7	80.6	66.7	123.0	66.7	123.0
96"		9	55.6	55.6	66.7	69.9	66.7	118.3	66.7	118.3
72"	60" (5)	7	52.5	52.5	66.7	69.6	66.7	93.1	66.7	93.1

A = NO. OF ANCHORS PER HEAD & SILL
( ) = NO. OF ANCHORS PER JAMB

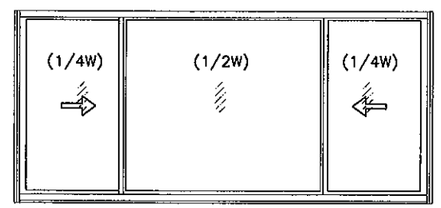

OPERATING VENTS TO BE 1/4 OF THE WINDOW WIDTH

NOTE:
GLASS CAPACITIES ON THIS SHEET ARE BASED ON ASTM E1300-04 (3 SEC. GUSTS) AND FLORIDA BUILDING COMMISSION DECLARATORY STATEMENT DCA05-DEC-219

Engr: JAVAD AHMAD
CIVIL
FLA. PE # 70592
C.A.N. 3538

FEB 27 2012

Approved as complying with the Florida Building Code
Date MARCH 8, 2012
NOA# 11-1206.01
Miami Dade Product Control
By Manuel Perez

AL-FAROOQ CORPORATION
ENGINEERS & PRODUCT DEVELOPMENT
1235 S.W. 87 AVE
MIAMI, FLORIDA 33174
TEL. (305) 264-8100 FAX. (305) 262-6978
COMP-ANL\W11-54PWC

SERIES FWS-300 ALUM HORIZ. SLIDING WDW. (N.I.)

PINO'S WINDOW CORP.
6860 N.W. 75TH STREET
MEDLEY, FL. 33166
TEL. (305) 888-9946 FAX (305) 888-8079

revisions:

no	date	by	description
A	02.27.12		REV. PER PERA COMMENTS

date: 11-15-11
scale: 1/2" = 1"
dr. by: HAMID
chk. by:

drawing no.
W11-54

sheet 3 of 7

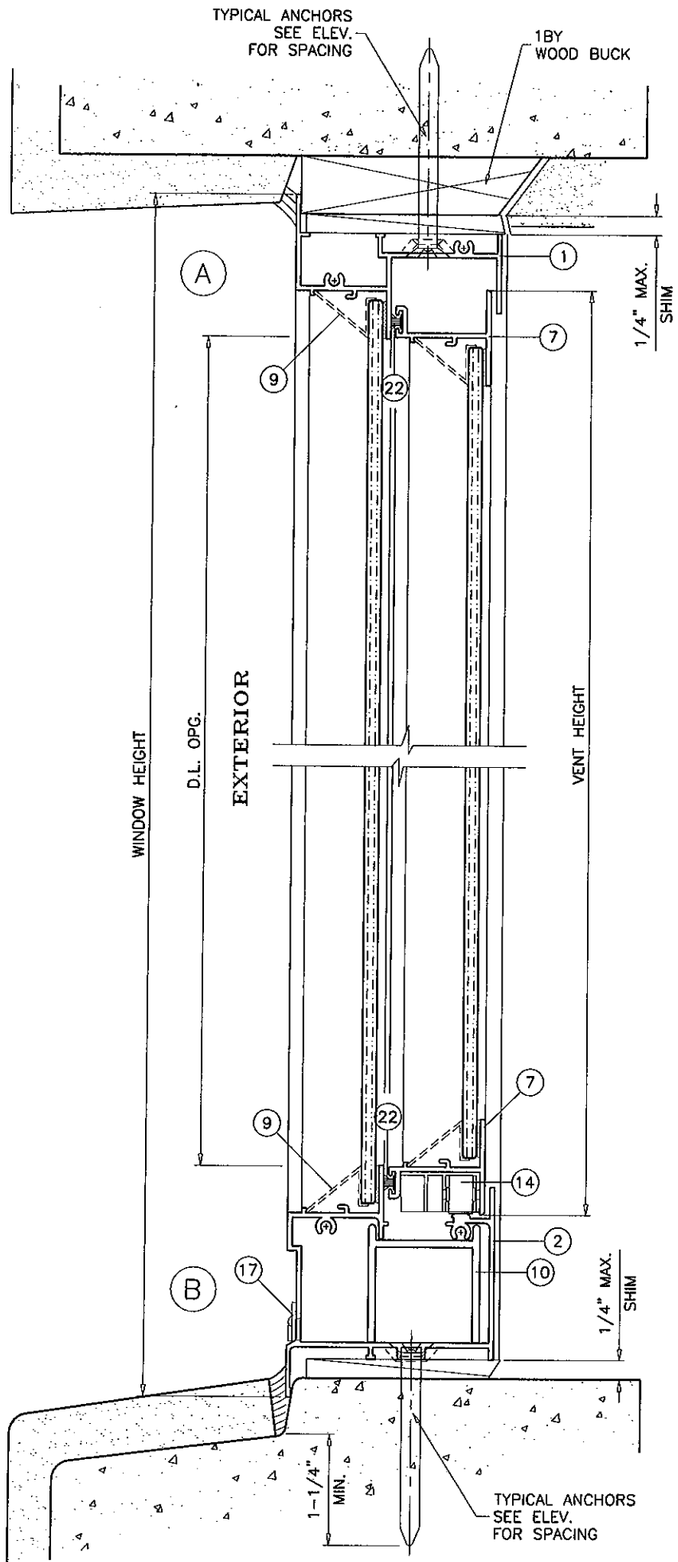

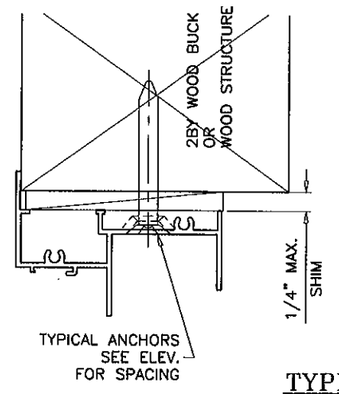

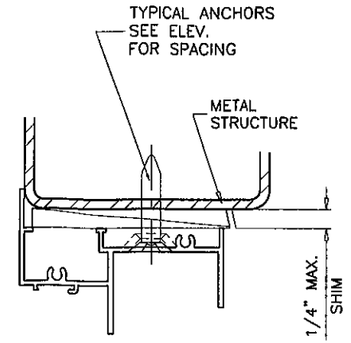

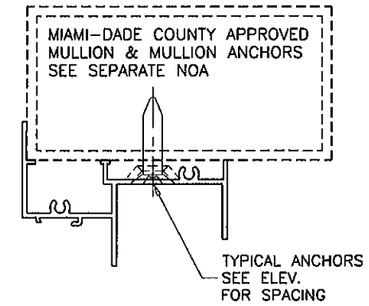

TYPICAL ANCHORS: SEE ELEV. FOR SPACING

TYPE 'A'

5/16" DIA. ULTRACON BY 'ELCO' (Fu=177 KSI, Fy=155 KSI)

INTO 2BY WOOD BUCKS OR WOOD STRUCTURES
1-3/8" MIN. PENETRATION INTO WOOD

THRU 1BY BUCKS INTO CONC. OR MASONRY
1-1/4" MIN. EMBED INTO CONC. OR MASONRY

DIRECTLY INTO CONC. OR MASONRY
1-1/4" MIN. EMBED INTO CONC. OR MASONRY

1/4" DIA. SELF DRILLING SCREWS (GRADE 5 CRS)

INTO METAL STRUCTURES
STEEL : 12 GA. MIN. (Fy = 36 KSI MIN.)
ALUMINUM : 1/8" THK. MIN. (6063-T5 MIN.)
(STEEL IN CONTACT WITH ALUMINUM TO BE PLATED OR PAINTED)

#12 SMS OR SELF DRILLING SCREWS (GRADE 2 CRS)

INTO MIAMI-DADE COUNTY APPROVED MULLIONS (MIN. THK. = .090")
(NO SHIM SPACE)

TYPICAL EDGE DISTANCE

INTO CONCRETE AND MASONRY = 1-5/8" MIN.
INTO WOOD STRUCTURE = 1" MIN.
INTO METAL STRUCTURE = 3/4" MIN.

CONCRETE AT HEAD, SILL OR JAMBS f'c = 3000 PSI MIN.
C-90 HOLLOW/FILLED BLOCK AT JAMBS f'm = 2000 PSI MIN.

TYPE 'B'

1/4" DIA. ULTRACON BY 'ELCO' (Fu=177 KSI, Fy=155 KSI)

INTO 2BY WOOD BUCKS OR WOOD STRUCTURES
1-3/8" MIN. PENETRATION INTO WOOD

THRU 1BY BUCKS INTO CONC. OR MASONRY
1-1/4" MIN. EMBED INTO CONC. OR MASONRY

DIRECTLY INTO CONC. OR MASONRY
1-1/4" MIN. EMBED INTO CONC. OR MASONRY

WOOD BUCKS AND METAL STRUCTURE NOT BY PINO WINDOWS MUST SUSTAIN LOADS IMPOSED BY GLAZING SYSTEM AND TRANSFER THEM TO THE BUILDING STRUCTURE.

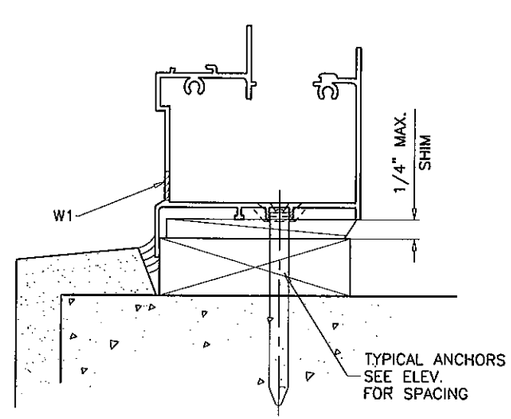

WEEPHOLES:

W1 = 1-7/8" X 3/8" WEEPHOLES AT 6-3/8"" FROM EACH END

Engr: JAVAD AHMAD
CIVIL
FLA. PE # 70592
I.C.A.N. 3538

FEB 27 2012
Approved as complying with the Florida Building Code
Date MARCH 8, 2012
NOA# 11-1206.01
Miami Dade Product Control
By Manuel Perez

AL-FAROOQ CORPORATION
ENGINEERS & PRODUCT DEVELOPMENT
1235 S.W. 87 AVE
MIAMI, FLORIDA 33174
TEL. (305) 264-8100 FAX. (305) 262-6978

COMP-ANL\W11-54PWC

SERIES FWS-300 ALUM HORIZ. SLIDING WDW. (N.I.)

PINO'S WINDOW CORP.
6860 N.W. 75TH STREET
MEDLEY, FL. 33166
TEL. (305) 888-9946 FAX (305) 888-8079

revisions:			
no	date	by	description
A	02.27.12		NO CHANGE THIS SHEET

date: 11-15-11
scale: 1/2" = 1"
dr. by: HAMID
chk. by:

drawing no. W11-54

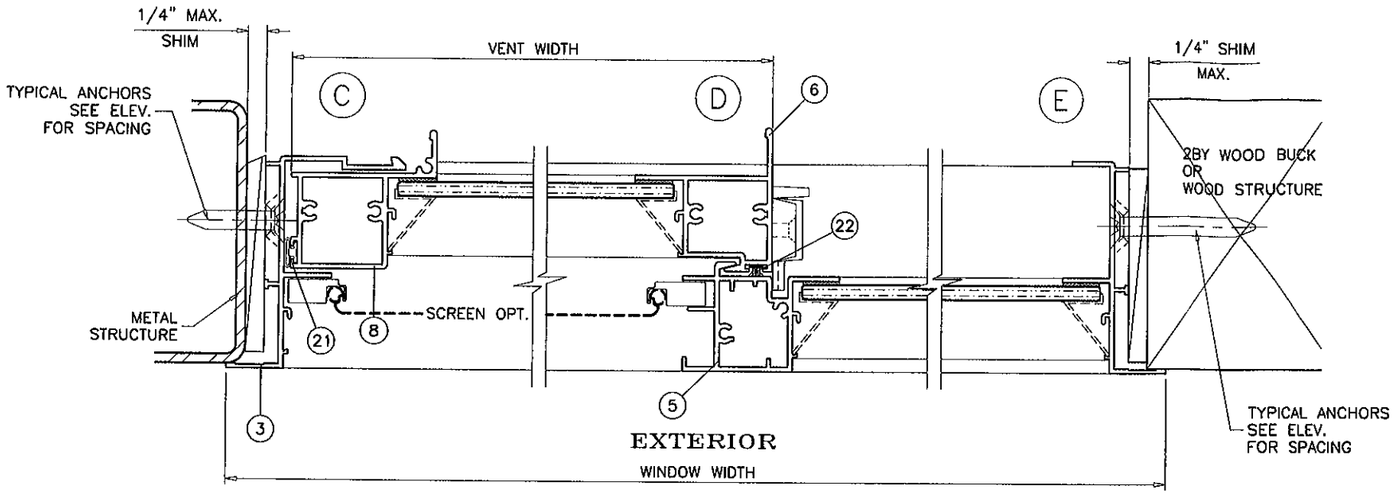

XO LAYOUT
OX OPPOSITE

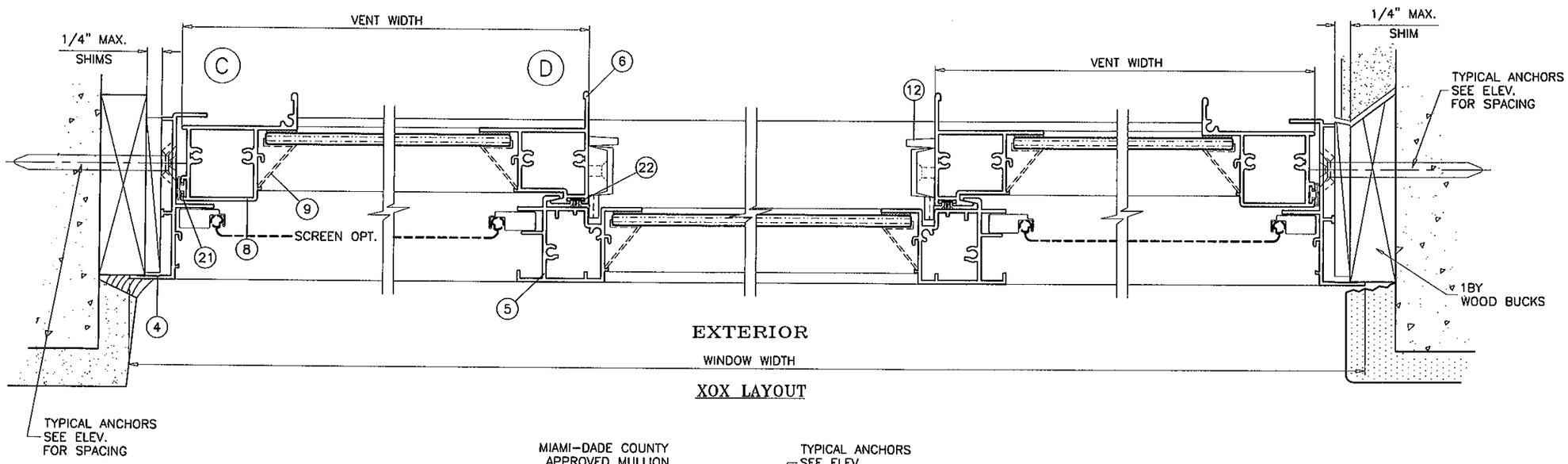

XOX LAYOUT

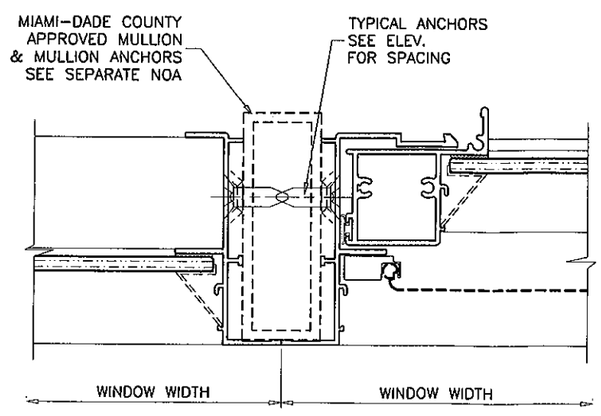

Engr: JAVAD AHMAD
CIVIL
FLA. PE # 70592
C.A.N. 3538

FEB 27 2012
Approved as complying with the
Florida Building Code
Date MARCH 8, 2012
NOA# 11-1206.01
Miami Dade Product Control
By

AL-FAROOQ CORPORATION
ENGINEERS & PRODUCT DEVELOPMENT
1235 S.W. 87 AVE
MIAMI, FLORIDA 33174
TEL. (305) 264-8100 FAX. (305) 262-6978
COMP-ANL\W11-54PWC

SERIES FWS-300 ALUM HORIZ. SLIDING WDW. (N.I.)

PINO'S WINDOW CORP.
6860 N.W. 75TH STREET
MEDLEY, FL. 33166
TEL. (305) 888-9946 FAX (305) 888-8079

revisions:

no	date	by	description
A	02.27.12		NO CHANGE THIS SHEET

date: 11-15-11
scale: 1/2" = 1"
dr. by: HAMID
chk. by:

drawing no.
W11-54

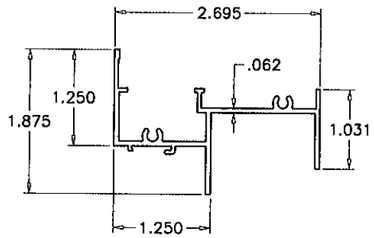

1 FRAME HEAD

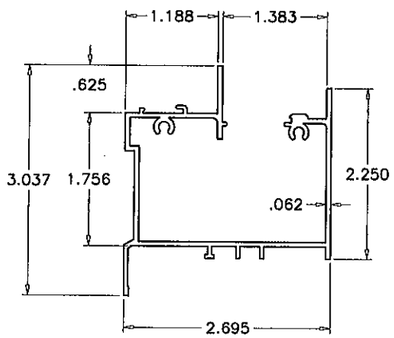

2 FRAME SILL

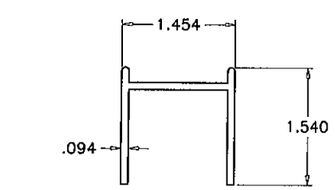

10 SILL TRACK

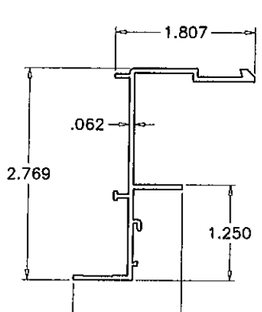

3 FRAME JAMB (VENT)

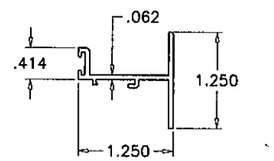

7 VENT TOP/BOTTOM RAIL

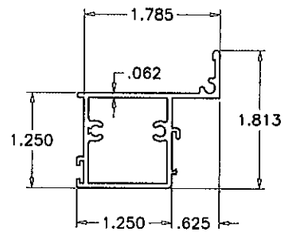

8 JAMB STILE

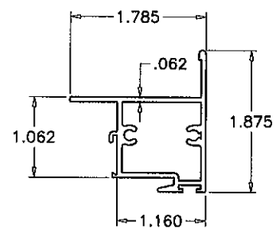

6 MEETING RAIL

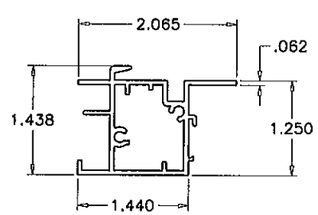

5 FIXED MTG. RAIL

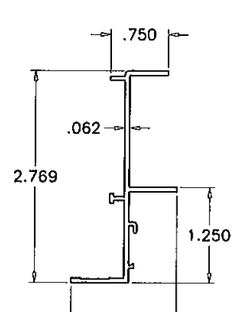

4 FRAME JAMB (FIX)

ITEM	PART #	QUANTITY	DESCRIPTION	MATERIAL	MANF./SUPPLIER/REMARKS
1	FWS-022	1	FRAME HEAD	6063-T6	-
2	FWS-026	1	FRAME SILL	6063-T6	-
3	FWS-019	1	FRAME JAMB VENT	6063-T6	-
4	FWS-	1	FRAME JAMB FIX.	6063-T6	-
5	FWS-025	1/ VENT	FIXED RAIL	6063-T5	-
6	FWS-024	1/ VENT	VENT MEETING RAIL	6063-T6	-
7	FWS-016	2/ VENT	TOP AND BOTTOM RAIL	6063-T5	-
8	FWS-023	1/ VENT	JAMB STILE	6063-T5	-
9	-	OPTIONAL	GLAZING BEAD	ALUMUNUM	ROLL FORMED
10	FWS-015A	1	3-1/2" LONG SILL TRACK INSERT	6063-T5	AT FIXED RAILS ONLY
12	-	2/ VENT	CAM TYPE SWEEP LOCK	ZAMAK	AT 13-7/8" FROM ENDS
14	RH-2500	2/ VENT	ROLLER HOUSING & GUIDE	PLASTIC	M&M PLASTICS
17	FWS-075	AS REQD.	BAFFLE	NYLON	M&M PLASTICS
18	#8 X 1-1/4"	AS REQD.	FRAME/VENT ASSEMBLY SCREWS	CRS	P.H. SMS
19	#8 X 3"	2/ VENT	FIX. RAIL SILL SCREWS (SILL END)	CRS	P.H. SMS
21	E-205	AS REQD.	BULB W'STRIPPING	FLEX PVC	-
22	W23211NG	AS REQD.	WOOLPILE W'STRIPPING	-	ULTRAFAB OR EQUIV.
25	-	1/ VENT	5/16" BOX SCREEN	-	OPTIONAL

SEALANTS:

ALL FRAME AND VENT CORNERS, INSTALLATION SCREWS AND BOTTOM OF FIXED MEETING RAIL SEALED WITH CLEAR/ALUM COLORED SEALANT.

Engr: JAVAD AHMAD
CIVIL
FLA. PE # 70592
C.A.N. 3538

FEB 27 2012
Approved as complying with the Florida Building Code
Date March 8, 2017
NOA# 11-1206.01
Miami Dade Product Control
By Manuel Perez

AL-FAROOQ CORPORATION
ENGINEERS & PRODUCT DEVELOPMENT
1235 S.W. 87 AVE
MIAMI, FLORIDA 33174
TEL. (305) 264-8100 FAX. (305) 262-6978
COMP-ANL\W11-54PWC

SERIES FWS-300 ALUM HORIZ. SLIDING WDW. (N.I.)

PINO'S WINDOW CORP.
6860 N.W. 75TH STREET
MEDLEY, FL. 33166
TEL. (305) 888-9946 FAX (305) 888-8079

revisions:

no	date	by	description
A	02.27.12		NO CHANGE THIS SHEET

date: 11-15-11
scale: 1/2" = 1"
dr. by: HAMID
chk. by:

drawing no. W11-54

sheet 6 of 7

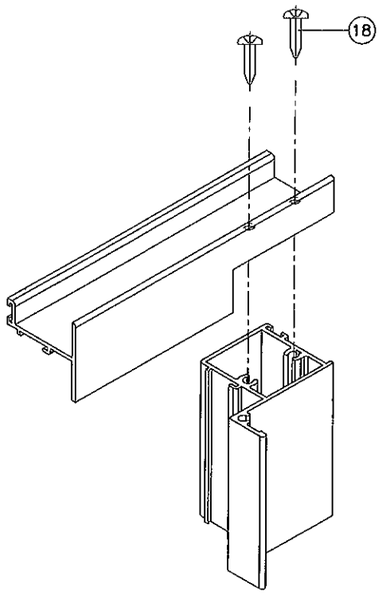

VENT TOP/BOTTOM CORNERS

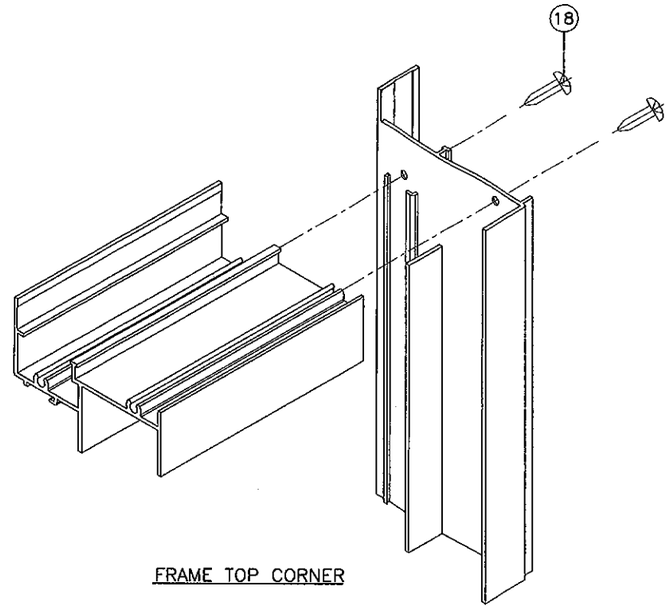

FRAME TOP CORNER

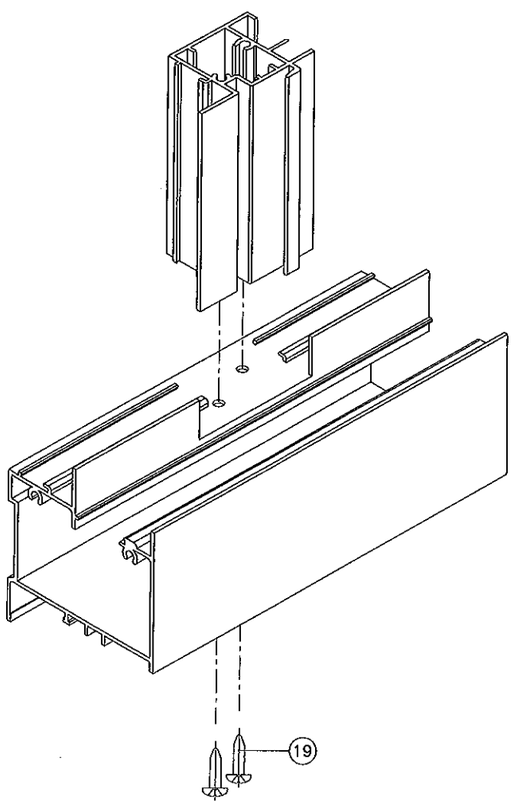

FIXED MTG. RAIL CORNER

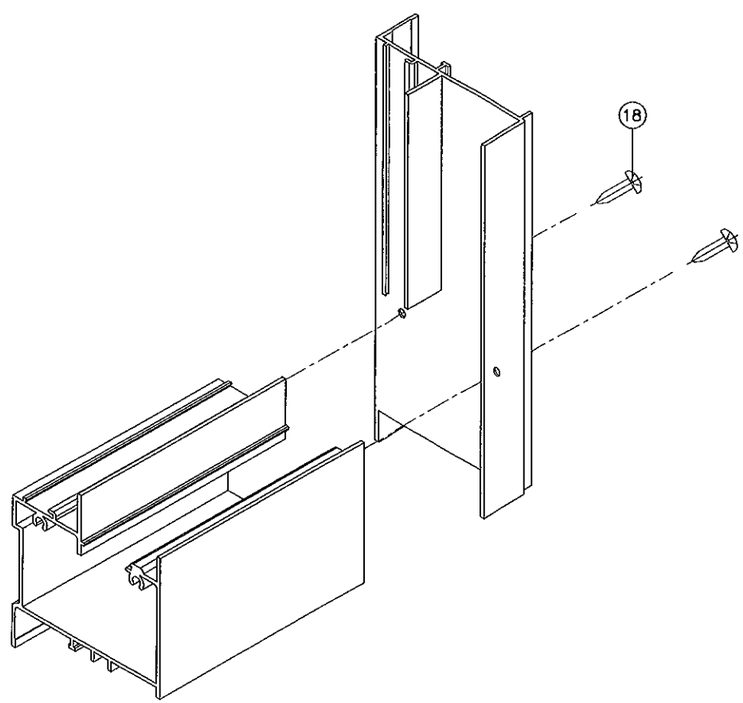

FRAME BOTTOM CORNER

Engr: JAVAD AHMAD
CIVIL
FLA. PE # 70592
C.A.N. 3538

Approved for complying with the Florida Building Code
Date March 9, 2012
NOA# 11-1206.01
Miami Dade Product Control
By Manuel Perez

FEB 27 2012

AL-FAROOQ CORPORATION
ENGINEERS & PRODUCT DEVELOPMENT
1235 S.W. 87 AVE
MIAMI, FLORIDA 33174
TEL. (305) 264-8100 FAX. (305) 262-6978
COMP-ANL\W11-54PWC

SERIES FWS-300 ALUM HORIZ. SLIDING WDW. (N.I.)

PINO'S WINDOW CORP.
6860 N.W. 75TH STREET
MEDLEY, FL. 33166
TEL. (305) 888-9946 FAX (305) 888-8079

revisions:

no	date	by	description
A	02.27.12		NO CHANGE THIS SHEET

date: 11-15-11
scale: 1/2" = 1"
dr. by: HAMID
chk. by:

drawing no.
W11-54

sheet 7 of 7