MIAMI-DADE COUNTY
DEPARTMENT OF PERMITTING, ENVIRONMENT, AND REGULATORY AFFAIRS (PERA)
BOARD AND CODE ADMINISTRATION DIVISION

MIAMI-DADE COUNTY
PRODUCT CONTROL SECTION
11805 SW 26 Street, Room 208
Miami, Florida 33175-2474
T (786) 315-2590 F (786) 315-2599
www.miamidade.gov/building

NOTICE OF ACCEPTANCE (NOA)

Manucy & Assoc., Inc.
d/b/a RM Enterprises, Inc.
352 A Tall Pines Road
West Palm Beach, FL 33413

SCOPE:
This NOA is being issued under the applicable rules and regulations governing the use of construction materials. The documentation submitted has been reviewed and accepted by Miami-Dade County PERA-Product Control Section to be used in Miami Dade County and other areas where allowed by the Authority Having Jurisdiction (AHJ).

This NOA shall not be valid after the expiration date stated below. The Miami-Dade County Product Control Section (In Miami Dade County) and/or the AHJ (in areas other than Miami Dade County) reserve the right to have this product or material tested for quality assurance purposes. If this product or material fails to perform in the accepted manner, the manufacturer will incur the expense of such testing and the AHJ may immediately revoke, modify, or suspend the use of such product or material within their jurisdiction. PERA reserves the right to revoke this acceptance, if it is determined by Miami-Dade County Product Control Section that this product or material fails to meet the requirements of the applicable building code.

This product is approved as described herein, and has been designed to comply with the High Velocity Hurricane Zone of the Florida Building Code.

DESCRIPTION: Aluminum Frame Condensing Unit Enclosure

APPROVAL DOCUMENT: Drawing No. 11-119, titled "Aluminum Frame Condensing Unit Enclosure", sheets 1 through 12 of 12, prepared by Tilteco, Inc., dated November 16, 2011, signed and sealed by Walter A. Tillit Jr., P.E., on March 08, 2012, bearing the Miami-Dade County Product Control Revision stamp with the Notice of Acceptance number and the expiration date by the Miami-Dade County Product Control Section.

MISSILE IMPACT RATING: Large and Small Missile Impact Resistant

LABELING: Each unit shall bear a permanent label with the manufacturer's name or logo, city, state and the following statement: "Miami-Dade County Product Control Approved", unless otherwise noted herein.

RENEWAL of this NOA shall be considered after a renewal application has been filed and there has been no change in the applicable building code negatively affecting the performance of this product.

TERMINATION of this NOA will occur after the expiration date or if there has been a revision or change in the materials, use, and/or manufacture of the product or process. Misuse of this NOA as an endorsement of any product, for sales, advertising or any other purposes shall automatically terminate this NOA. Failure to comply with any section of this NOA shall be cause for termination and removal of NOA.

ADVERTISEMENT: The NOA number preceded by the words Miami-Dade County, Florida, and followed by the expiration date may be displayed in advertising literature. If any portion of the NOA is displayed, then it shall be done in its entirety.

INSPECTION: A copy of this entire NOA shall be provided to the user by the manufacturer or its distributors and shall be available for inspection at the job site at the request of the Building Official.

This NOA **revises NOA # 10-1202.09** and consists of this page 1, evidence submitted pages E-1 & E-2 as well as approval document mentioned above.

The submitted documentation was reviewed by **Helmy A. Makar, P.E., M.S.**

MIAMI-DADE COUNTY APPROVED

Helmy A. Makar
03/22/2012

NOA No. 11-1206.06
Expiration Date: 07/14/2016
Approval Date: 03/22/2012

Manucy & Assoc., Inc.
d/b/a RM Enterprises, Inc.

NOTICE OF ACCEPTANCE: EVIDENCE SUBMITTED

1. EVIDENCE SUBMITTED UNDER PREVIOUS APPROVAL #10-1202.09

A. DRAWINGS

1. *Drawing No. 10-083, titled "Aluminum Frame Condensing Unit Enclosure", sheets 1 through 12 of 12, prepared by Tilteco, Inc., dated November 11, 2010, signed and sealed by Walter A. Tillit Jr., P.E., on June 15, 2011.*

B. TESTS

1. *Test reports on Uniform Static Air Pressure Test, Loading per TAS 202-94 and Large Missile Impact Test per TAS 201-94, along with marked-up drawings and installation diagram of Aluminum Frame Condensing Unit Enclosure, prepared by American Test Lab of South Florida, Test Report No. 1026.01-10, dated 11/23/10, signed and sealed by Julio E. Gonzalez, P.E.*

C. CALCULATIONS

1. *Calculation titled Aluminum Frame Condensing Unit Enclosure, prepared by Tilteco, Inc., 23 sheets, dated 11/12/10, signed and sealed by Walter A. tillit Jr., P.E. on 11/22/10.*

D. QUALITY ASSURANCE

1. *By Miami-Dade County Building and Neighborhood Compliance Department (BNC).*

E. MATERIAL CERTIFICATIONS

1. *Tensile Test Report by QC Metallurgical, Inc., report # 10KM-1272, dated 11/16/2010, signed and sealed by Frank E. Grate Jr., P.E.*

F. STATEMENTS

1. *Statement letter of conformance to FBC, 2007 Edition, from Tilteco, Inc., dated 11/15/10, signed & sealed by Walter A. Tillit Jr., P.E.*

2. NEW EVIDENCE SUBMITTED

A. DRAWINGS

1. *Drawing No. 11-119, titled "Aluminum Frame Condensing Unit Enclosure", sheets 1 through 12 of 12, prepared by Tilteco, Inc., dated November 16, 2011, signed and sealed by Walter A. Tillit Jr., P.E., on March 08, 2012.*

Helmy A. Makar, P.E., M.S.
PERA, Product Control Unit Supervisor
NOA No. 11-1206.06
Expiration Date: 07/14/2016
Approval Date: 03/22/2012

NOTICE OF ACCEPTANCE: EVIDENCE SUBMITTED

B. TESTS

1. None.

C. CALCULATIONS

1. None.

D. QUALITY ASSURANCE

1. By Miami-Dade County Department of Permitting, Environment, and Regulatory Affairs (PERA).

E. MATERIAL CERTIFICATIONS

1. None.

F. STATEMENTS

1. Statement letter of conformance to FBC, 2010 Edition, from Tilteco, Inc., dated 11/28/11, signed & sealed by Walter A. Tillit Jr., P.E.

Helmy A. Makar, P.E., M.S.
PERA, Product Control Unit Supervisor
NOA No. 11-1206.06
Expiration Date: 07/14/2016
Approval Date: 03/22/2012

GENERAL NOTES:

1. ALUMINUM FRAME CONDENSING UNIT ENCLOSURE SHOWN ON THIS PRODUCT APPROVAL DOCUMENT (P.A.D.) HAS BEEN VERIFIED FOR COMPLIANCE IN ACCORDANCE WITH THE 2007 & 2010 EDITIONS OF THE FLORIDA BUILDING CODE. THIS PRODUCT MAY BE INSTALLED AT HIGH VELOCITY HURRICANE ZONES. (MIAMI-DADE/BROWARD COUNTIES)

   DESIGN WIND LOADS SHALL BE DETERMINED AS PER SECTION 1620 OF THE ABOVE MENTIONED CODES, USING ASCE 7-05 STANDARD FOR INSTALLATIONS UNDER 2007 FBC & ASCE 7-10 FOR INSTALLATIONS UNDER 2010 FBC AND SHALL NOT EXCEED THE MAXIMUM (A.S.D.) DESIGN PRESSURE RATINGS INDICATED ON NOTE 2:
   IN ORDER TO VERIFY THE ABOVE CONDITION, ULTIMATE DESIGN WIND LOADS DETERMINED PER ASCE 7-10 SHALL BE FIRST REDUCED TO A.S.D. DESIGN WIND LOADS BY MULTIPLYING THEM BY 0.6 IN ORDER TO COMPARE THESE W/ MAX. (A.S.D) DESIGN PRESSURE RATINGS INDICATED ON NOTE 2.

   IN ORDER TO VERIFY THAT ANCHORS ON THIS P.A.D. AS TESTED, WERE NOT OVER STRESSED, A 33% INCREASE IN ALLOWABLE STRESS FOR WIND LOADS WAS NOT USED IN THEIR ANALYSIS. FASTENERS SPACING TO WOOD HAS BEEN DETERMINED IN ACCORDANCE WITH N.D.S. 2005.
   ALUMINUM FRAME CONDENSING UNIT ENCLOSURE ADEQUACY FOR IMPACT AND WIND RESISTANCE HAS BEEN VERIFIED IN ACCORDANCE WITH SECTION 1626 (EXCEPT CYCLIC TEST) OF THE ABOVE MENTIONED CODE AS PER AMERICAN TESTING LAB. OF SOUTH FLORIDA REPORT # 1026.01-10, AS PER TAS-201 AND TAS-202 PROTOCOLS (S.F.=2.0).

2. **MAXIMUM A.S.D. DESIGN PRESSURE RATING: +144.0, -144.0 p.s.f.**

3. THIS PRODUCT HAS NOT BEEN TESTED FOR WIND DRIVEN RAIN PER FLORIDA BUILDING CODE, TAS 100(A).

4. THIS PRODUCT WAS TESTED FOR STRUCTURAL STRENGTH OF THE OUTER ENCLOSURE PARTS AND NOT THE CONDENSING UNIT BEING ENCLOSED. HOWEVER, CONDENSING UNIT MUST BE 2 3/8" SEPARATED FROM INNER FACE OF ENCLOSURE WALLS.

5. THIS APPROVAL IS FOR THE STRUCTURAL PERFORMANCE AND IMPACT RESISTANCE OF THE ENCLOSURE ONLY. INTERIOR CONDENSING UNIT WITH ITS ELECTRICAL CIRCUITRY ARE OUTSIDE THE SCOPE OF THIS APPROVAL.

6. ALUMINUM FRAME CONDENSING UNIT ENCLOSURE MUST BE ANCHORED DIRECTLY INTO ROOF FRAMING MEMBERS AND NOT TO ROOFING SYSTEM.
   AFTER THIS INSTALLATION IS COMPLETED, TENANT MUST RE-ROOF ALL AROUND ROOF AREA WHERE PRODUCT WAS INSTALLED TO PREVENT WATER INTRUSION. ALL ROOFING DETAILS SHALL COMPLY WITH **CHAPTER 15**, SECTIONS **1512** THRU **1525** OF THE FLORIDA BUILDING CODE.

7. ROOF STRUCTURE MUST BE DESIGNED TO WITHSTAND THE WEIGHT AND LOADING TRANSFERRED BY PRODUCT.

8. THIS PRODUCT INCLUDES A BOTTOM TOP HAT BASE (COMPONENT ©) TO BE USED TO SECURE THE PRODUCT TO THE ROOF FRAME (SEE NOTE 13 FOR FASTENERS SPECS),

9. ALL ALUMINUM AND COMPONENTS SHALL BE AS INDICATED ON THIS DRAWING AT BILL OF MATERIALS ON SHEET 4.

10. BOLTS TO BE ASTM A 307, GALVANIZED OR ZINC PLATED PER ASTM B 633 WITH 36 k.s.i. MINIMUM YIELD STRENGTH.

11. ALL SCREWS USED FOR ASSEMBLY CONNECTIONS (METAL TO METAL) TO BE STAINLESS STEEL 304 OR 316 AISI SERIES OR CORROSION RESISTANT COATED CARBON STEEL AS PER DIN 50018 AND SECTION 2411.3.3.4 OF THE FLORIDA BUILDING CODE WITH 50 ksi YIELD STRENGTH AND 90 ksi TENSILE STRENGTH.

12. ALL POP RIVETS TO BE 5052 ALUMINUM ALLOY WITH ALUMINUM MANDREL.

13. ANCHORS TO EXISTING BUILDING ROOF STRUCTURE SHALL BE AS FOLLOWS:

   (A) TO EXISTING POURED CONCRETE (Min. f'c=3192 p.s.i.).:

   - 1/4"ø TAPCON OR TAPCON W/ ADVANCED THREADFORM TECHNOLOGY ANCHORS AS MANUFACTURED BY ITW BUILDEX, INC.

   A.1) MINIMUM EMBEDMENT OF TAPCON OR TAPCON W/ ADVANCED THREADFORM TECHNOLOGY ANCHORS INTO POURED CONCRETE SHALL BE 1 3/4", BEYOND ANY FINISH MATERIAL.

   A.2) MINIMUM EDGE DISTANCE (E.D.) OF TAPCON OR TAPCON W/ ADVANCED THREADFORM TECHNOLOGY ANCHORS INTO POURED CONCRETE SHALL BE 3". EDGE DISTANCE IS BEYOND ANY FINISH MATERIAL.

   (B) TO EXISTING MIN. 12 GAGE MEMBER STEEL (ASTM A-500, A-653 OR A-36):

   - 1/4"øx3/4" TEK SCREW AS MANUFACTURED BY ITW BUILDEX, INC.

   B.1) MINIMUM EDGE DISTANCE (E.D.) OF TEK SCREW INTO STEEL SHALL BE 1/2". EDGE DISTANCE IS BEYOND ANY FINISH MATERIAL.

   (C) TO EXISTING WOOD (MIN. SPECIFIC GRAVITY, G = 0.55 MIN.):

   - 1/4"ø TAPCON OR TAPCON W/ ADVANCED THREADFORM TECHNOLOGY ANCHORS, PER **N.D.S. 2005.**

   C.1) MINIMUM THREADED PENETRATION OF TAPCON OR TAPCON W/ ADVANCED THREADFORM TECHNOLOGY, INTO THE WOOD FRAME UNIT SHALL BE 1 1/2", BEYOND ANY FINISH MATERIAL.

   C.2) MINIMUM EDGE DISTANCE (E.D.) OF TAPCON OR TAPCON W/ ADVANCED THREADFORM TECHNOLOGY ANCHORS, INTO WOOD SHALL BE 1". EDGE DISTANCE IS BEYOND ANY FINISH MATERIAL.

   (D) ANCHORS SHALL BE INSTALLED FOLLOWING ALL OF THE RECOMMENDATIONS AND SPECIFICATIONS OF THE ANCHOR'S MANUFACTURER.

14. THE INSTALLATION CONTRACTOR IS TO SEAL/CAULK ALL PRODUCT COMPONENT EDGES BETWEEN ROOF AND TOP HAT BASE TO PREVENT WIND/RAIN INTRUSION.

15. THIS PRODUCT INSTALLATION SHALL COMPLY WITH SPECS INDICATED IN THIS DRAWING PLUS ANY BUILDING AND ZONING REGULATIONS PROVIDED BY THE JURISDICTION WHERE PERMIT IS APPLIED TO.

16. (A) THIS PRODUCT APPROVAL DOCUMENT (P.A.D.) PREPARED BY THIS ENGINEER IS GENERIC AND DOES NOT PROVIDE INFORMATION FOR A SITE SPECIFIC PROJECT; i.e. WHERE THE SITE CONDITIONS DEVIATE FROM THE P.A.D.

   (B) CONTRACTOR TO BE RESPONSIBLE FOR THE SELECTION, PURCHASE AND INSTALLATION INCLUDING LIFE SAFETY OF THIS PRODUCT BASED ON THIS P.A.D. PROVIDED HE/SHE DOES NOT DEVIATE FROM THE CONDITIONS DETAILED ON THIS DOCUMENT. CONSTRUCTION SAFETY AT SITE IS THE CONTRACTOR'S RESPONSIBILITY.

   (C) THIS PRODUCT APPROVAL DOCUMENT WILL BE CONSIDERED INVALID IF MODIFIED.

   (D) SITE SPECIFIC PROJECTS SHALL BE PREPARED BY A FLORIDA REGISTERED ENGINEER OR ARCHITECT WHICH WILL BECOME THE ENGINEER OF RECORD (E.O.R.) FOR THE PROJECT AND WHO WILL BE RESPONSIBLE FOR THE PROPER USE OF THE P.A.D. ENGINEER OF RECORD, ACTING AS A DELEGATED ENGINEER TO THE P.A.D. ENGINEER, SHALL SUBMIT TO THIS LATTER THE SITE SPECIFIC DRAWINGS FOR REVIEW.

   (E) ORIGINAL P.A.D. SHALL BEAR THE DATE AND ORIGINAL SEAL AND SIGNATURE OF THE PROFESSIONAL ENGINEER OF RECORD THAT PREPARED IT.

17. PRODUCT MANUFACTURER'S LABEL SHALL BE PLACED ON A READILY AND VISIBLE LOCATION AT PRODUCT.
    ONE LABEL SHALL BE PLACED FOR EVERY PRODUCT.
    LABEL SHALL READ AS FOLLOWS:
    MANUCY & ASSOC., INC. d/b/a/ RM ENTERPRISES, INC.
    WEST PALM BEACH, FLORIDA
    MIAMI-DADE COUNTY PRODUCT CONTROL APPROVED.

PRODUCT REVISED
as complying with the Florida Building Code
Acceptance No 11-1206.06
Expiration Date 07/14/2016
By
Miami Dade Product Control

MIAMI-DADE COUNTY

WALTER A. TILLIT JR. LICENSE No 44167 STATE OF FLORIDA PROFESSIONAL ENGINEER

P.E. SEAL/SIGNATURE/DATE

FLORIDA BUILDING CODE (High Velocity Hurricane Zone)

©2011 RM ENTERPRISES, INC

TILTECO INC.
TILLIT TESTING & ENGINEERING COMPANY
6355 N.W. 36th. St., Ste. 305, VIRGINIA GARDENS, Fl. 33166
Phone : (305)871-1530 . Fax : (305)871-1531
e-mail: tilteco@aol.com
EB-0006719
WALTER A. TILLIT Jr. P.E.
FLORIDA Lic. # 44167

ALUMINUM FRAME CONDENSING UNIT ENCLOSURE

MANUCY & ASSOC., INC.
d/b/a/ RM ENTERPRISES, INC.
352 A TALL PINES ROAD
WEST PALM BEACH, FL. 33413
TEL: (561) 682-1225; FAX: (561) 682-3611

REV. No	DESCRIPTION	DATE	REV. No	DESCRIPTION	DATE
1	OLD 10-085	11/16/11	3		
2			4		

L.G./M.C.V./A.G.
DRAWN BY:

11/16/11
DATE

11-119
DRAWING No

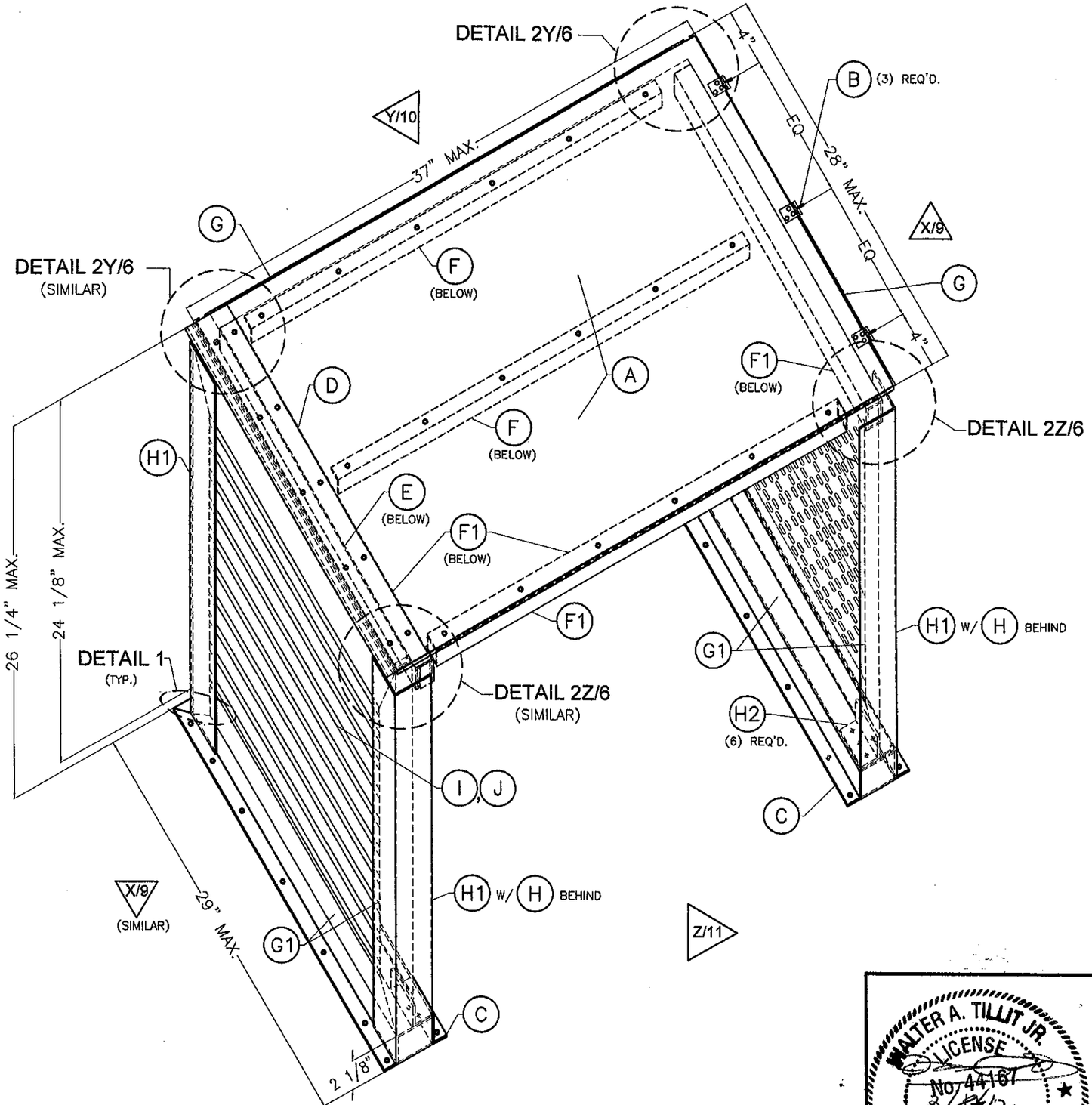

ISOMETRIC

1/8" = 1"

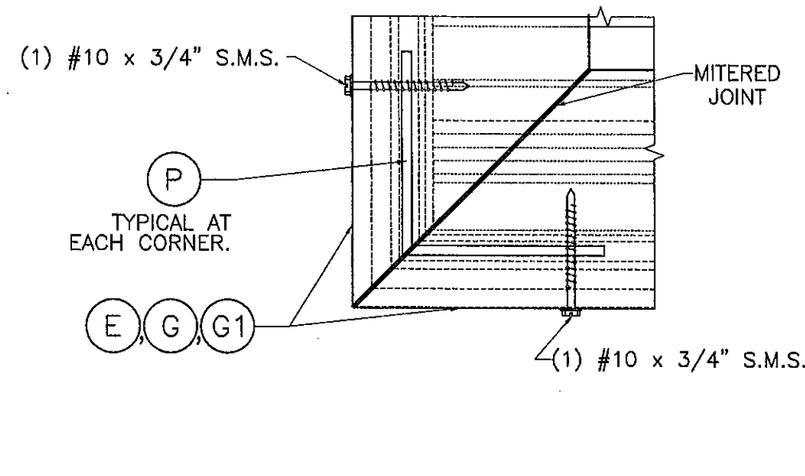

DETAIL: 1

TYPICAL FRAME CORNER DETAIL AT WALL PANELS

1/4" = 1"

PRODUCT REVISED
as complying with the Florida Building Code
Acceptance No 11-1206.06
Expiration Date 07/14/2016
By Helena A. Martin
Miami Dade Product Control

MIAMI–DADE COUNTY

WALTER A. TILLIT JR. LICENSE No. 44167 STATE OF FLORIDA PROFESSIONAL ENGINEER

P.E. SEAL / SIGNATURE / DATE

FLORIDA BUILDING CODE (High Velocity Hurricane Zone)

©2011 RM ENTERPRISES, INC

TILTECO INC.
TILLIT TESTING & ENGINEERING COMPANY
6355 N.W. 36th. St., Ste. 305, VIRGINIA GARDENS, Fl. 33166
Phone : (305)871-1530 . Fax : (305)871-1531
e-mail: tilteco@aol.com
EB-0006719
WALTER A. TILLIT Jr. P.E.
FLORIDA Lic. # 44167

ALUMINUM FRAME CONDENSING UNIT ENCLOSURE

L.G./M.C.V./A.G. DRAWN BY:

MANUCY & ASSOC., INC.
d/b/a/ RM ENTERPRISES, INC.
352 A TALL PINES ROAD
WEST PALM BEACH, FL. 33413
TEL: (561) 682-1225; FAX: (561) 682-3611

11/16/11 DATE

11-119 DRAWING No

REV. No	DESCRIPTION	DATE	REV. No	DESCRIPTION	DATE
1	OLD 10-083	11/16/11	3		
2			4		

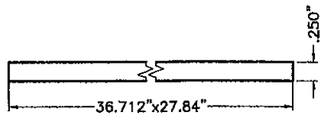

(A) ROOF PANEL

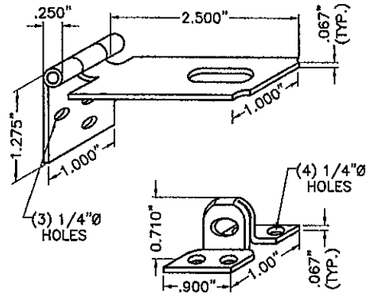

(B) 2 1/2" SAFETY HASP

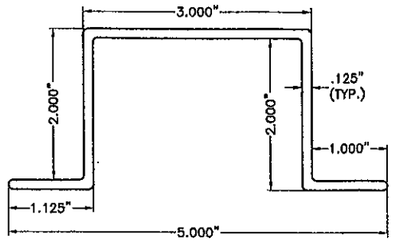

(C) TOP HAT BASE

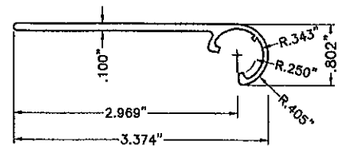

(D) FLAT FEMALE HINGE

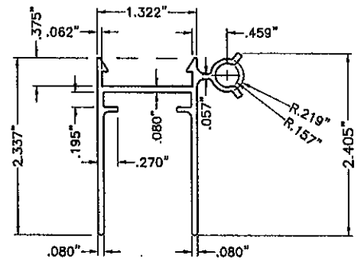

(E) BAHAMA MALE TOP FRAME

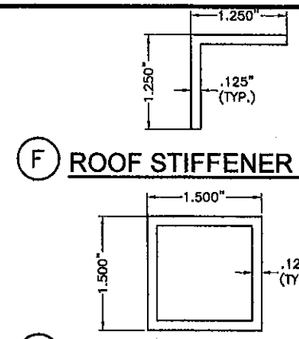

(F) ROOF STIFFENER ANGLE

(F1) ROOF STIFFENER TUBE

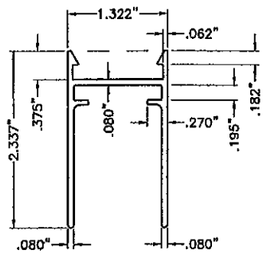

(G) BAHAMA TOP FRAME

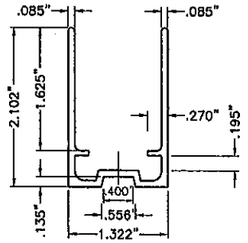

(G1) VERTICAL & BOTTOM BAHAMA FRAME

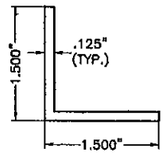

(H) CONT. INTERIOR CORNER VERTICAL ANGLE

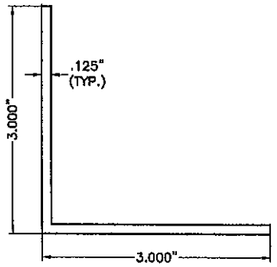

(H1) EXTERIOR CORNER VERTICAL ANGLE

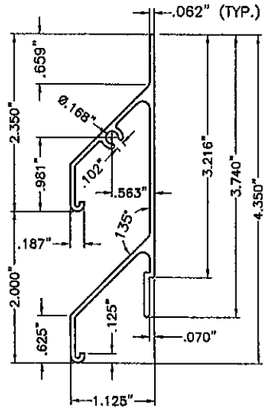

(I) TOP END WALL BLADE

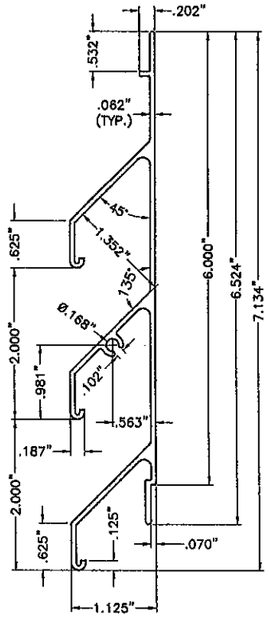

(J) WALL BLADE

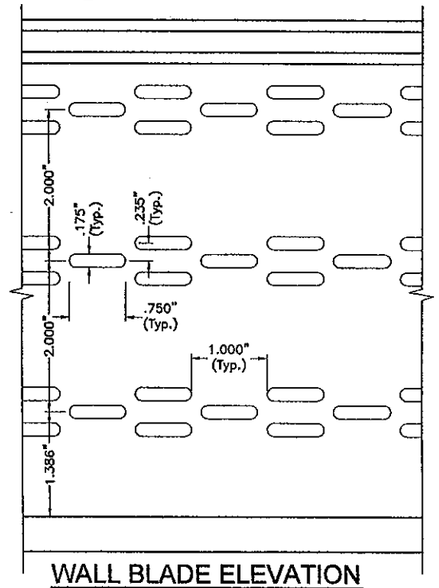

WALL BLADE ELEVATION

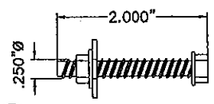

(K) BOLT W/ NUT & WASHER

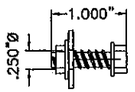

(K1) BOLT W/ NUT & WASHER

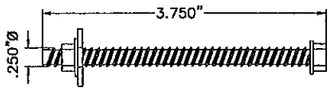

(K2) BOLT W/ NUT & WASHER

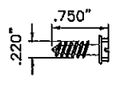

(L) 1/4"Ø-14 TEK SCREW

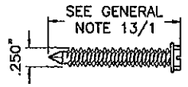

(M) TAPCON

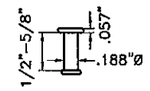

(N) POP RIVET

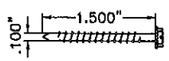

(O) #10 S.S. S.M.S.

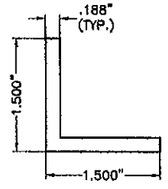

(H2) BASE ANGLE

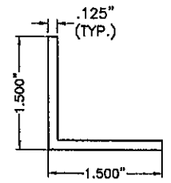

(P) CORNER ANGLE AT WALLS PANELS

COMPONENTS

SCALE: 1/2" = 1"

PRODUCT REVISED
as complying with the Florida Building Code
Acceptance No 11-1206.06
Expiration Date 07/14/2016
By Hector A. Martinez
Miami Dade Product Control

MIAMI-DADE COUNTY

WALTER A. TILLIT JR. LICENSE No. 44167 STATE OF FLORIDA PROFESSIONAL ENGINEER

P.E. SEAL/SIGNATURE/DATE

FLORIDA BUILDING CODE (High Velocity Hurricane Zone)

©2011 RM ENTERPRISES, INC

TILTECO INC.
TILLIT TESTING & ENGINEERING COMPANY
6355 N.W. 36th. St., Ste. 305, VIRGINIA GARDENS, FL. 33166
Phone : (305)871-1530 . Fax : (305)871-1531
e-mail: tilteco@aol.com
EB-0006719
WALTER A. TILLIT Jr. P.E.
FLORIDA Lic. # 44167

ALUMINUM FRAME CONDENSING UNIT ENCLOSURE

L.G./M.C.V./A.G. DRAWN BY:

MANUCY & ASSOC., INC.
d/b/a/ RM ENTERPRISES, INC.
352 A TALL PINES ROAD
WEST PALM BEACH, FL. 33413
TEL: (561) 682-1225; FAX: (561) 682-3611

11/16/11 DATE

11-119 DRAWING No

REV. No	DESCRIPTION	DATE	REV. No	DESCRIPTION	DATE
1	OLD 10-083	11/16/11	3		
2			4		

BILL OF MATERIALS

ITEM	DESCRIPTION	DIMENSIONS	MATERIAL	MANUFACTURER	NOTES
(A)	ROOF PANEL	1/4" THK.x36 3/4"x27 7/8"	ALUMINUM SHEET METAL, 5052-H32 ALLOY	--	LOCATED AT TOP OF ENCLOSURE
(B)	2 1/2" SAFETY HASP	SEE DETAIL	ZINC PLATED STEEL	ALLEGIS CORP.	PART #: SPV 30 2 1/2 ZN, (3) REQ'D. W/ (3) #12x1/2" TEK SCREWS TO (A) & (4) #12x1/2" TEK SCREWS TO (G)
(C)	TOP HAT BASE	0.125" THK.x5.00"x2.125"	6061-T6 ALUMINUM ALLOY	--	USE AT (3) WALL PANELS
(D)	FLAT FEMALE HINGE	0.100" THK.x3.374"x0.802"	6063-T6 ALUMINUM ALLOY	E.M.S.	CONTINUOUS, USE AT ONE WALL
(E)	BAHAMA MALE TOP FRAME	0.080" THK.x1.322"x2.405"	6063-T6 ALUMINUM ALLOY	E.M.S.	LOCATED AT ONE WALL ONLY
(F)	ROOF STIFFENER ANGLE	0.125" THK.x1.25"x1.25"	6063-T6 ALUMINUM ALLOY	--	LOCATED AT ROOF PANEL ORIENTED AT LONG SIDE
(F1)	ROOF STIFFENER TUBE	0.125" THK.x1.50"x1.50"	6063-T5 ALUMINUM ALLOY	--	LOCATED AT ROOF PANEL ORIENTED AT LONG OPEN SIDE AND AT TOP OF 2 SHORT SIDES, ADJACENT TO (E) & (G)
(G)	BAHAMA TOP FRAME	0.080" THK.x1.322"x2.337"	6063-T6 ALUMINUM ALLOY	E.M.S.	AT TOP OF (2) WALL PANELS
(G1)	VERTICAL & BOTTOM BAHAMA FRAME	0.085" THK.x1.322"x2.102"	6063-T6 ALUMINUM ALLOY	E.M.S.	USE AT (3) WALL PANELS
(H)	CONT. INTERIOR CORNER VERTICAL ANGLE & 1 1/2" LONG INTERIOR CORNER VERTICAL ANGLE AT	0.125" THK.x1.50"x1.50"	6063-T6 ALUMINUM ALLOY	--	USE AT (4) CORNERS FULL HEIGHT
(H1)	EXTERIOR CORNER VERTICAL ANGLE	0.125" THK.x3.00"x3.00"	6063-T6 ALUMINUM ALLOY	--	USE AT (4) CORNERS FULL HEIGHT
(H2)	BASE ANGLE	0.188" THK.x1.5"x1.5"x3" LONG	6063-T5 ALUMINUM ALLOY	--	(2) REQ'D. EACH WALL
(I)	TOP END WALL BLADE	0.062" THK.x1.125"x4.35"	6063-T6 ALUMINUM ALLOY	E.M.S.	USE AT (3) WALLS
(J)	WALL BLADE	0.062" THK.x1.125"x7.134"	6063-T6 ALUMINUM ALLOY	E.M.S.	USE AT (3) WALLS
(K)	BOLT W/ NUT & WASHER	1/4"Øx2" LONG	ASTM A-307 GALVANIZED STEEL	--	USE (2) EACH (H1) TO (G1) AND AT 4" O.C. VERTICALLY FULL HEIGHT
(K1)	BOLT W/ NUT & WASHER	1/4"Øx1" LONG	ASTM A-307 GALVANIZED STEEL	--	USE TO CONNECT (H) TO (H1) AT FRONT CONERS
(K2)	BOLT W/ NUT & WASHER	1/4"Øx3 1/2" LONG	ASTM A-307 GALVANIZED STEEL	--	USE AT (F1) CONNECTION TO (H) & (H1)
(L)	1/4"Ø-14 TEK SCREW	1/4"Øx3/4" LONG	COATED CARBON STEEL	ITW/BUILDEX	SEE ELEVATIONS
(M)	FASTENERS	1/4" DIAMETER	COATED CARBON STEEL	ITW/BUILDEX	USE AT FOR ANCHORING TO SUBSTRATE. SEE GENERAL NOTE 13/1 AND SHEET 12 FOR INSTALLATIONS DETAILS
(N)	POP RIVET	3/16"Øx1/2"-5/8" LONG	5052 ALUMINUM RIVET W/ ALUMINUM MANDREL	--	USE TO CONNECT (A) TO (F) & (F1) AT ROOF
(O)	#10 S.S. S.M.S.	1 1/2" LONG	STAINLESS STEEL	--	USE (1) AT EACH (I) & (J) TO (G1)
(P)	CORNER ANGLE AT WALL PANEL	0.125" THK.x1.50"x1.50"x1" LONG	6061-T6 ALUMINUM ALLOY	E.M.S.	USE AT (4) CORNERS OF EA. WALL PANEL

PRODUCT REVISED
as complying with the Florida Building Code
Acceptance No 11-1206.06
Expiration Date 07/14/2016
By
Miami Dade Product Control

MIAMI-DADE COUNTY

WALTER A. TILLIT JR. LICENSE No. 44167 STATE OF FLORIDA PROFESSIONAL ENGINEER

P.E. SEAL/SIGNATURE/DATE

FLORIDA BUILDING CODE (High Velocity Hurricane Zone)

©2011 RM ENTERPRISES, INC

TILLECO INC.
TILLIT TESTING & ENGINEERING COMPANY
6355 N.W. 36th. St., Ste. 308, VIRGINIA GARDENS, FL. 33166
Phone : (305)871-1630 . Fax : (305)871-1531
e-mail: tilteco@aol.com
EB-0006719
WALTER A. TILLIT Jr. P.E.
FLORIDA Lic. # 44167

ALUMINUM FRAME CONDENSING UNIT ENCLOSURE

MANUCY & ASSOC., INC.
d/b/a/ RM ENTERPRISES, INC.
352 A TALL PINES ROAD
WEST PALM BEACH, FL. 33413
TEL: (561) 682-1225; FAX: (561) 682-3611

REV. No	DESCRIPTION	DATE	REV. No	DESCRIPTION	DATE
1	OLD 10-063	11/10/11	3		
2			4		

L.G./M.G.V./A.G.
DRAWN BY:

11/16/11
DATE

11-119
DRAWING No

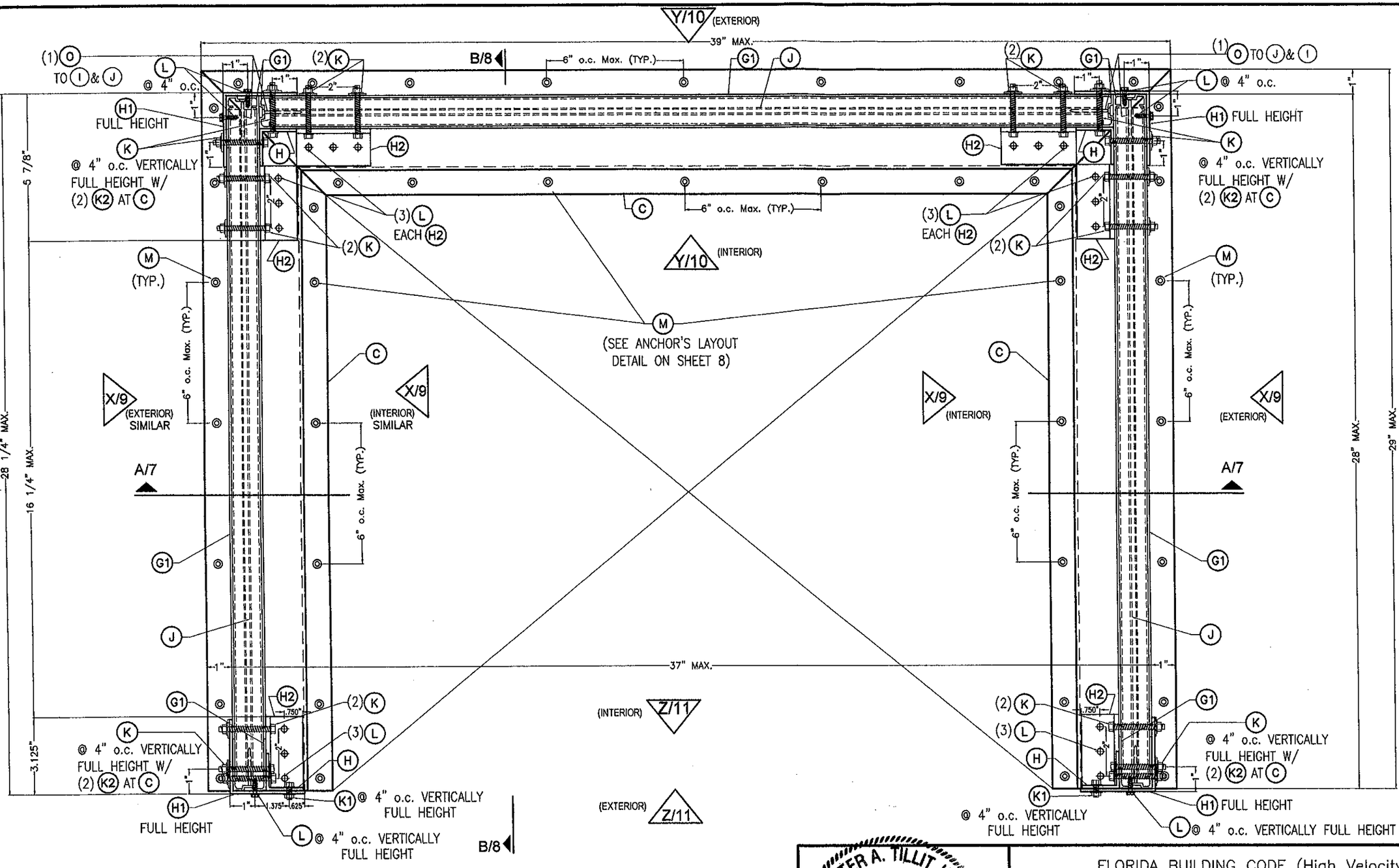

PLAN (AT BASE)

N.T.S.

PRODUCT REVISED
as complying with the Florida Building Code
Acceptance No 11-1206.06
Expiration Date 07/14/2016
By Miami Dade Product Control

MIAMI–DADE COUNTY

WALTER A. TILLIT JR. LICENSE No. 44167 STATE OF FLORIDA PROFESSIONAL ENGINEER

P.E. SEAL/SIGNATURE/DATE

FLORIDA BUILDING CODE (High Velocity Hurricane Zone)

©2011 RM ENTERPRISES, INC

TILTECO INC.
TILLIT TESTING & ENGINEERING COMPANY
6355 N.W. 36th. St., Ste. 305, VIRGINIA GARDENS, Fl. 33166
Phone : (305)871-1530 . Fax : (305)871-1531
e-mail: tilteco@aol.com
EB-0008719
WALTER A. TILLIT Jr. P.E.
FLORIDA Lic. # 44167

ALUMINUM FRAME CONDENSING UNIT ENCLOSURE

L.G./M.C.V./A.G.
DRAWN BY:

MANUCY & ASSOC., INC.
d/b/a/ RM ENTERPRISES, INC.
352 A TALL PINES ROAD
WEST PALM BEACH, FL. 33413
TEL: (561) 682-1225; FAX: (561) 682-3611

11/16/11
DATE

11–119
DRAWING No

REV. No	DESCRIPTION	DATE	REV. No	DESCRIPTION	DATE
1	OLD 10-083	11/16/11	3		
2			4		

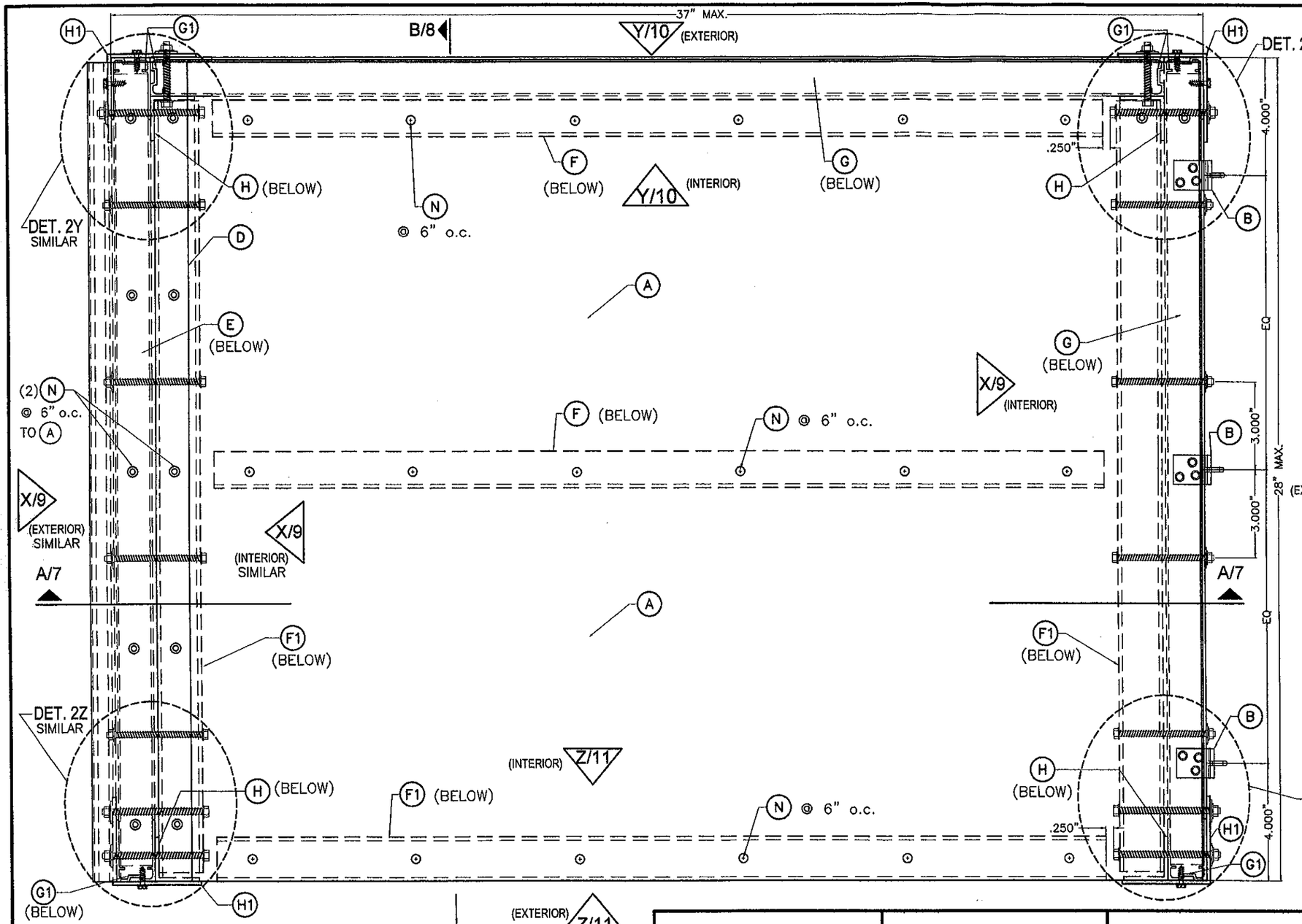

PLAN (AT ROOF)

SCALE: 1/4" = 1"

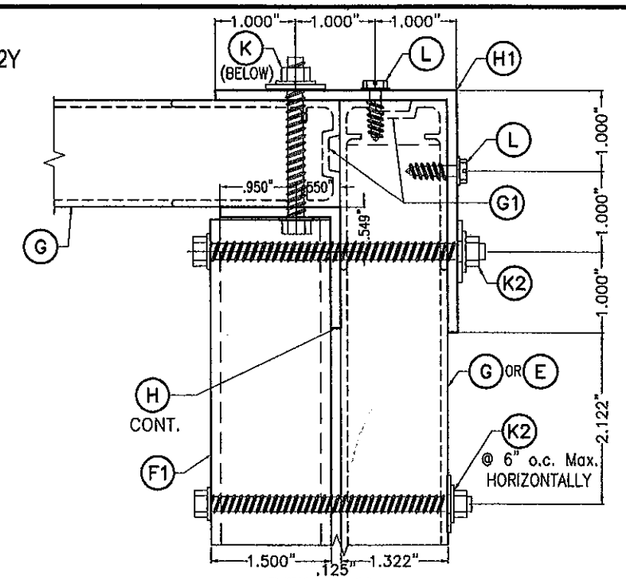

DETAIL 2Y

SCALE: 1/2" = 1"

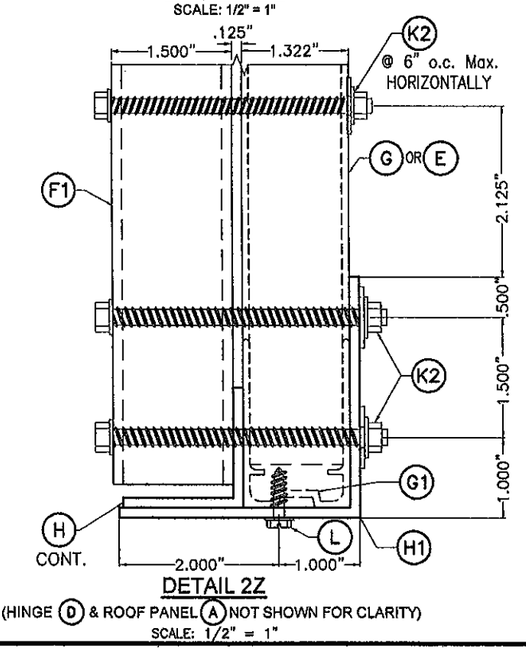

DETAIL 2Z

(HINGE (D) & ROOF PANEL (A) NOT SHOWN FOR CLARITY)

SCALE: 1/2" = 1"

PRODUCT REVISED
as complying with the Florida Building Code
Acceptance No 11-1206.06
Expiration Date 07/14/2016
By Miami Dade Product Control

MIAMI–DADE COUNTY

WALTER A. TILLIT JR. LICENSE No. 44167 STATE OF FLORIDA PROFESSIONAL ENGINEER

P.E. SEAL, SIGNATURE & DATE

FLORIDA BUILDING CODE (High Velocity Hurricane Zone)

©2011 RM ENTERPRISES, INC

TILTECO INC.
TILLIT TESTING & ENGINEERING COMPANY
6355 N.W. 36th. St., Ste. 305, VIRGINIA GARDENS, FL. 33166
Phone : (305)871-1530 . Fax : (305)871-1531
e-mail: tilteco@aol.com
EB-0006719
WALTER A. TILLIT Jr. P.E.
FLORIDA Lic. # 44167

ALUMINUM FRAME CONDENSING UNIT ENCLOSURE

MANUCY & ASSOC., INC.
d/b/a/ RM ENTERPRISES, INC.
352 A TALL PINES ROAD
WEST PALM BEACH, FL. 33413
TEL: (561) 682-1225; FAX: (561) 682-3611

REV. No	DESCRIPTION	DATE	REV. No	DESCRIPTION	DATE
1	OLD 10-083	11/16/11	3		
2			4		

L.G./M.C.V./A.G.
DRAWN BY:

11/16/11
DATE

11–119
DRAWING No

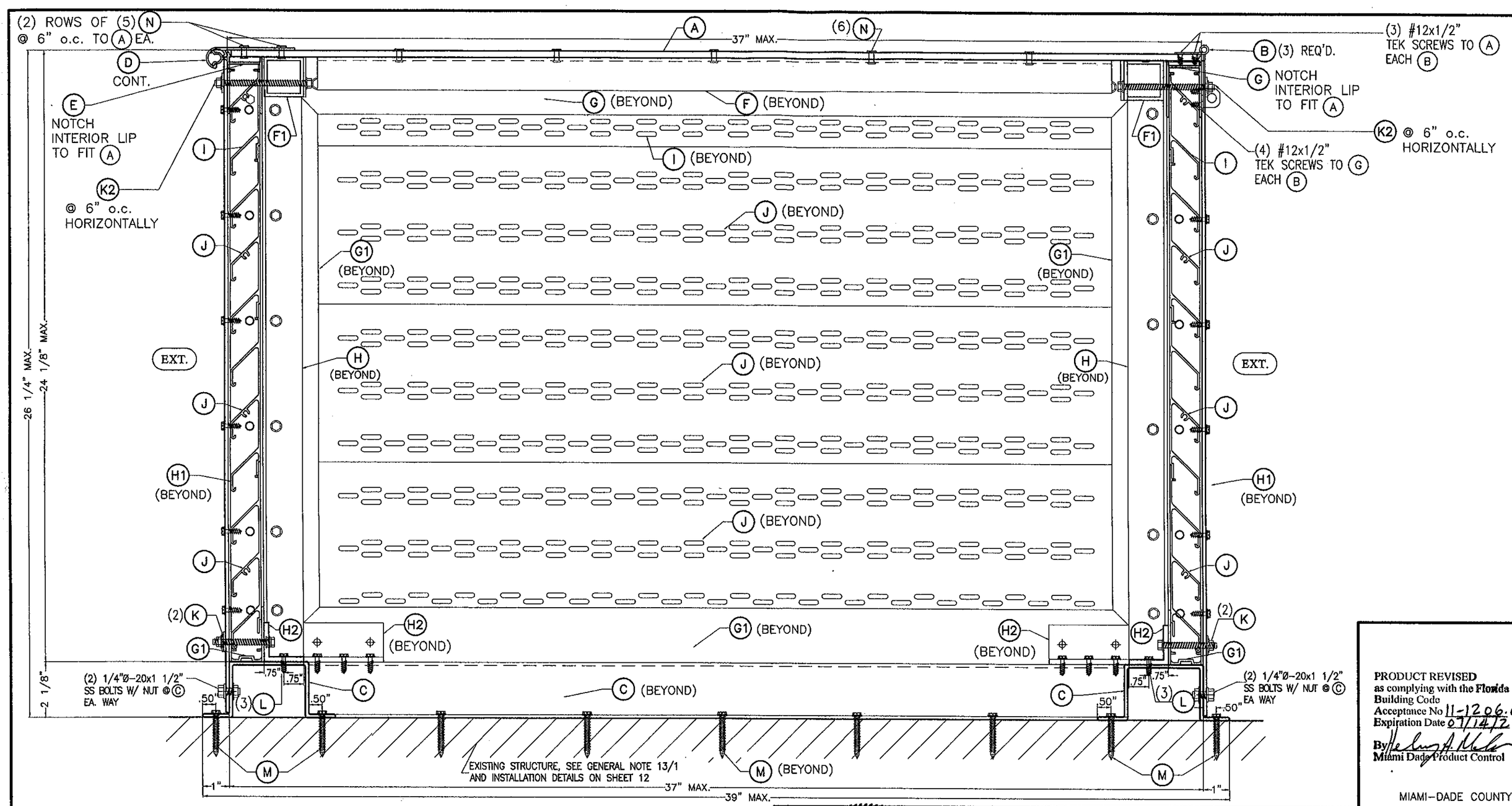

SECTION A-A

SCALE: 1/4" = 1"

PRODUCT REVISED
as complying with the Florida Building Code
Acceptance No 11-1206.06
Expiration Date 07/14/2016
By
Miami Dade Product Control

MIAMI-DADE COUNTY

WALTER A. TILLIT JR. LICENSE NO. 44167 STATE OF FLORIDA PROFESSIONAL ENGINEER

P.E. SEAL/SIGNATURE/DATE

FLORIDA BUILDING CODE (High Velocity Hurricane Zone)

©2011 RM ENTERPRISES, INC

TILTECO INC.
TILLIT TESTING & ENGINEERING COMPANY
6355 N.W. 36th. St., Ste. 305, VIRGINIA GARDENS, FL 33166
Phone : (305)871-1530 . Fax : (305)871-1531
e-mail: tilteco@aol.com
EB-0006719
WALTER A. TILLIT Jr, P.E.
FLORIDA Lic. # 44167

ALUMINUM FRAME CONDENSING UNIT ENCLOSURE

L.G./M.C.V./A.G.
DRAWN BY:

MANUCY & ASSOC., INC.
d/b/a/ RM ENTERPRISES, INC.
352 A TALL PINES ROAD
WEST PALM BEACH, FL. 33413
TEL: (561) 682-1225; FAX: (561) 682-3611

11/16/11
DATE

11-119
DRAWING No

REV. No	DESCRIPTION	DATE	REV. No	DESCRIPTION	DATE
1	OLD 10-083	11/16/11	3		
2			4		

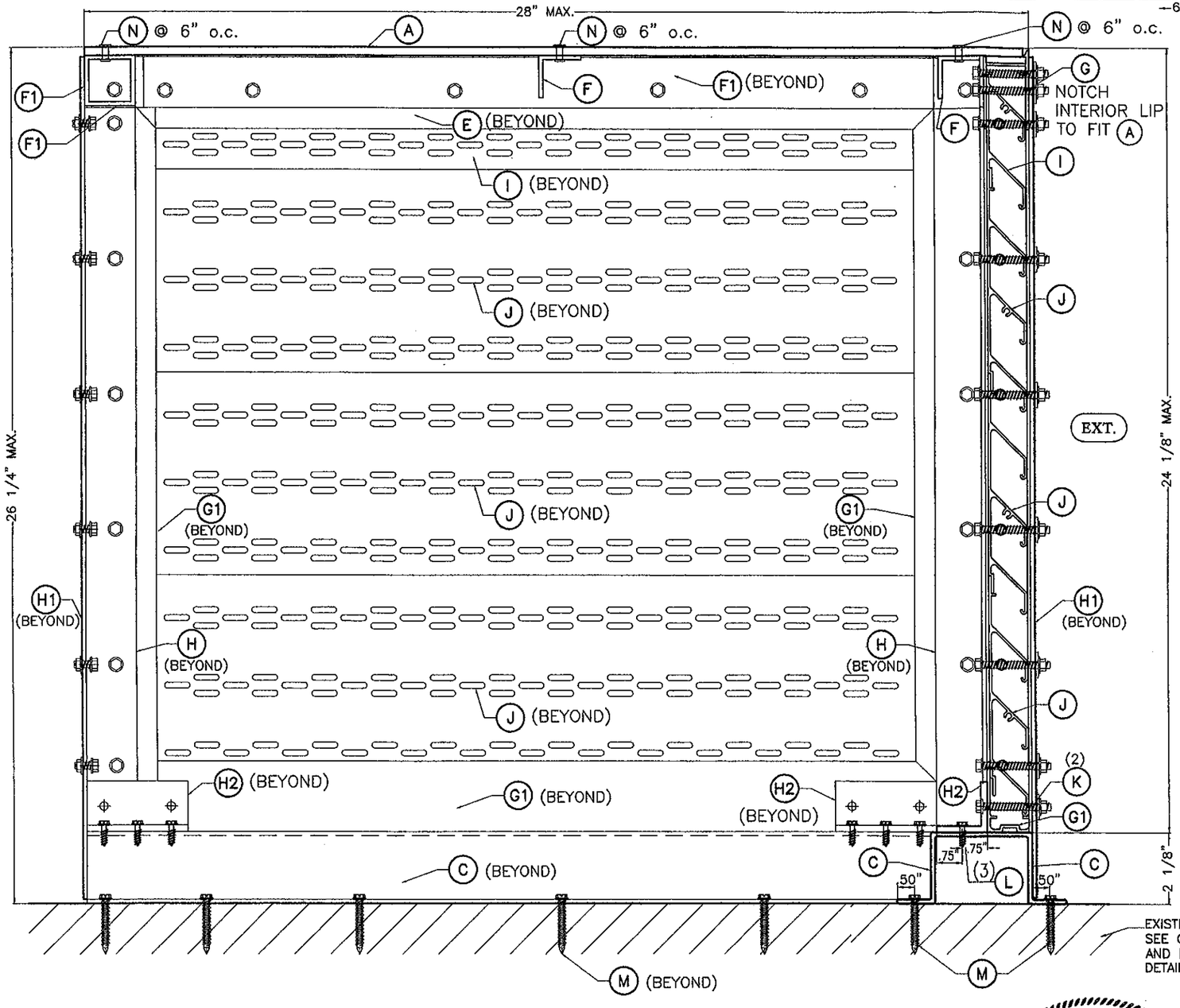

SECTION B-B
N.T.S.

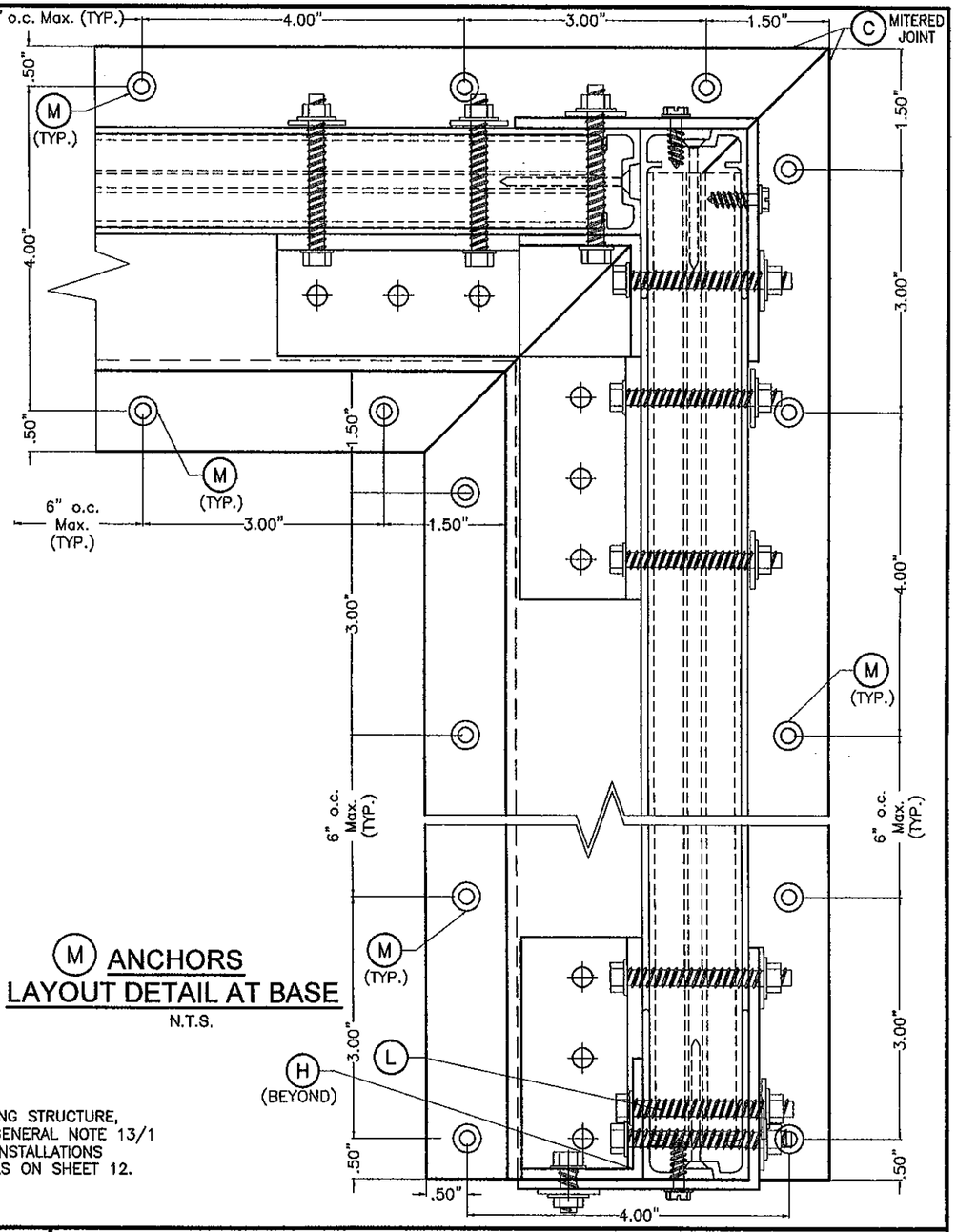

M ANCHORS LAYOUT DETAIL AT BASE
N.T.S.

PRODUCT REVISED
as complying with the Florida Building Code
Acceptance No 11-1206.06
Expiration Date 07/14/2016
By Miami Dade Product Control

MIAMI–DADE COUNTY

WALTER A. TILLIT JR. LICENSE No. 44167 STATE OF FLORIDA PROFESSIONAL ENGINEER

P.E. SEAL/SIGNATURE/DATE

FLORIDA BUILDING CODE (High Velocity Hurricane Zone)

©2011 RM ENTERPRISES, INC

TILTECO INC.
TILLIT TESTING & ENGINEERING COMPANY
6355 N.W. 36th. St., Ste. 305, VIRGINIA GARDENS, FL 33166
Phone : (305)871-1530 . Fax : (305)871-1531
e-mail: tilteco@aol.com
EB-0006719
WALTER A. TILLIT Jr. P.E.
FLORIDA Lic. # 44167

ALUMINUM FRAME CONDENSING UNIT ENCLOSURE

L.G./M.C.V./A.G. DRAWN BY:

MANUCY & ASSOC., INC.
d/b/a/ RM ENTERPRISES, INC.
352 A TALL PINES ROAD
WEST PALM BEACH, FL. 33413
TEL: (561) 682-1225; FAX: (561) 682-3611

11/16/11 DATE

11-119 DRAWING No

REV. No	DESCRIPTION	DATE	REV. No	DESCRIPTION	DATE
1	OLD 10-085	11/16/11	3		
2			4		

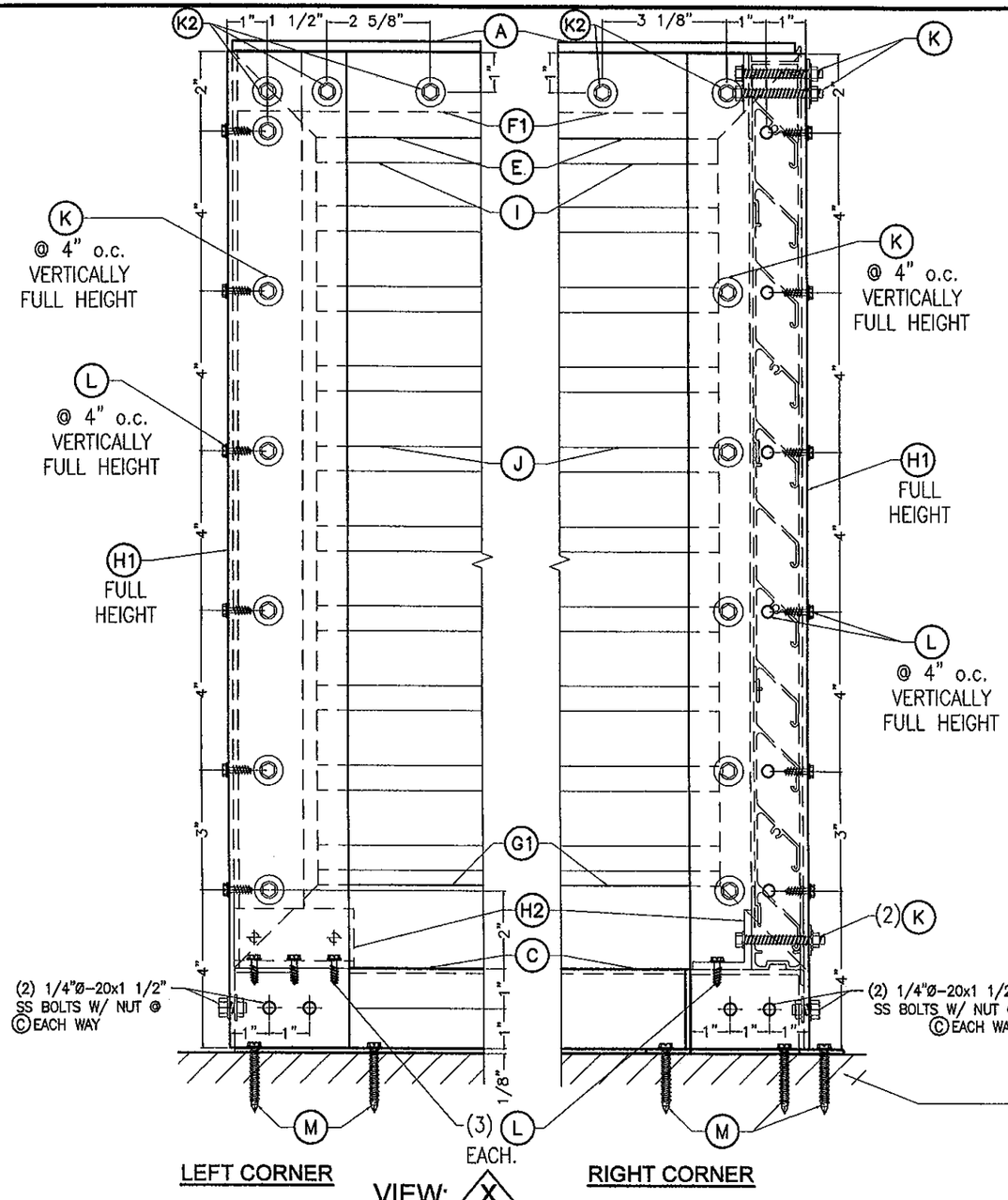

VIEW: X

RIGHT SIDE EXTERIOR ELEVATION

(LEFT SIDE EXTERIOR ELEVATION IS SIMILAR)

SCALE: 1/4" = 1"

EXISTING STRUCTURE, SEE GENERAL NOTE 13/1 AND INSTALLATIONS DETAILS ON SHEET 12. (TYP. EACH SIDE)

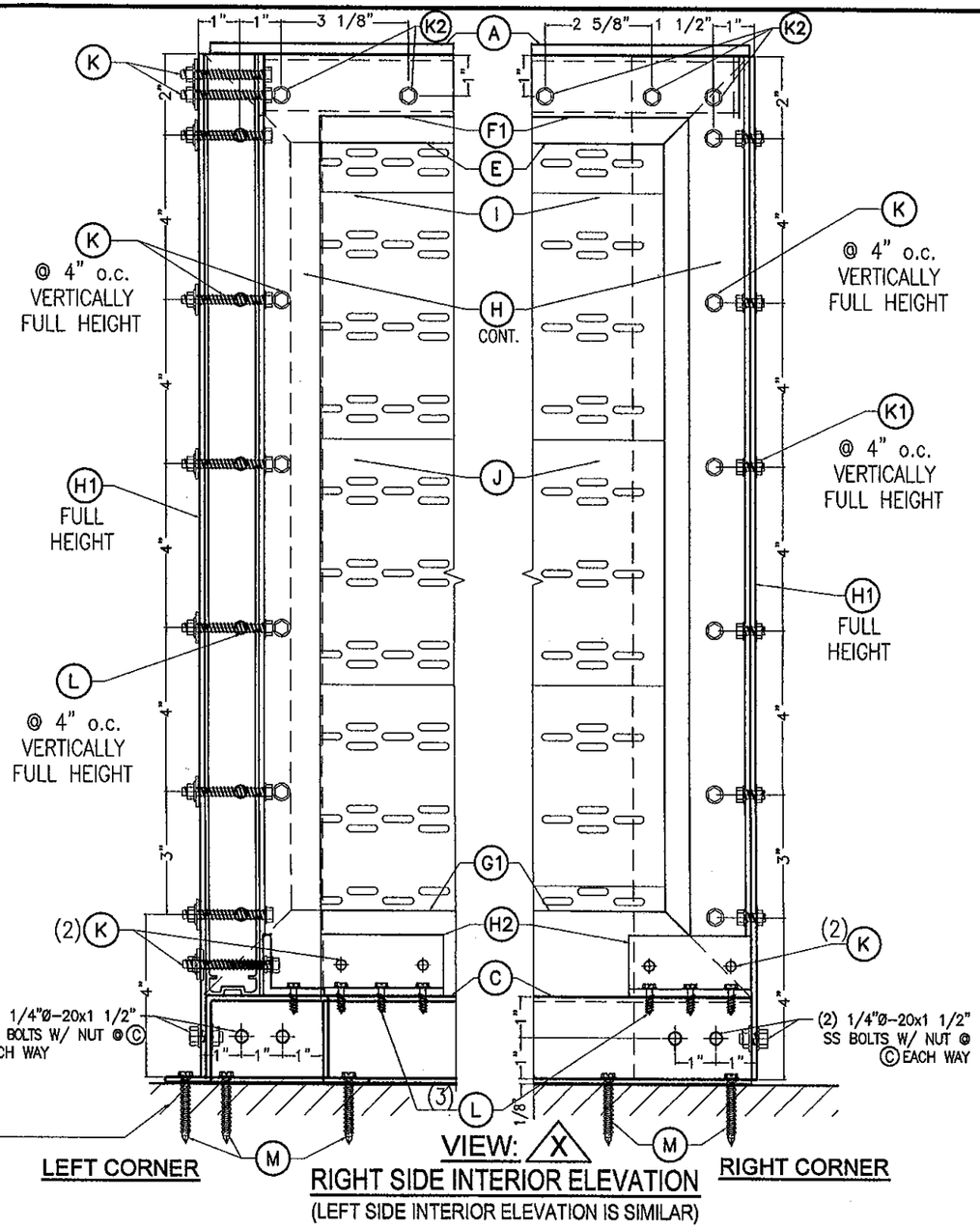

VIEW: X

RIGHT SIDE INTERIOR ELEVATION

(LEFT SIDE INTERIOR ELEVATION IS SIMILAR)

SCALE: 1/4" = 1"

PRODUCT REVISED
as complying with the Florida Building Code
Acceptance No 11-1206.06
Expiration Date 07/14/2016
By Miami Dade Product Control

MIAMI-DADE COUNTY

WALTER A. TILLIT JR. LICENSE No. 44167 STATE OF FLORIDA PROFESSIONAL ENGINEER

P.E. SEAL / SIGNATURE / DATE

FLORIDA BUILDING CODE (High Velocity Hurricane Zone)

©2011 RM ENTERPRISES, INC

TILTECO INC.
TILLIT TESTING & ENGINEERING COMPANY
6355 N.W. 36th. St., Ste. 305, VIRGINIA GARDENS, Fl. 33166
Phone : (305)871-1530 . Fax : (305)871-1531
e-mail: tilteco@aol.com
EB-0006719
WALTER A. TILLIT Jr. P.E.
FLORIDA Lic. # 44167

ALUMINUM FRAME CONDENSING UNIT ENCLOSURE

L.G./M.C.V./A.G.
DRAWN BY:

MANUCY & ASSOC., INC.
d/b/a/ RM ENTERPRISES, INC.
352 A TALL PINES ROAD
WEST PALM BEACH, FL. 33413
TEL: (561) 682-1225; FAX: (561) 682-3611

11/16/11
DATE

11-119
DRAWING No

REV. No	DESCRIPTION	DATE	REV. No	DESCRIPTION	DATE
1	OLD 10-085	11/16/11	3		
2			4		

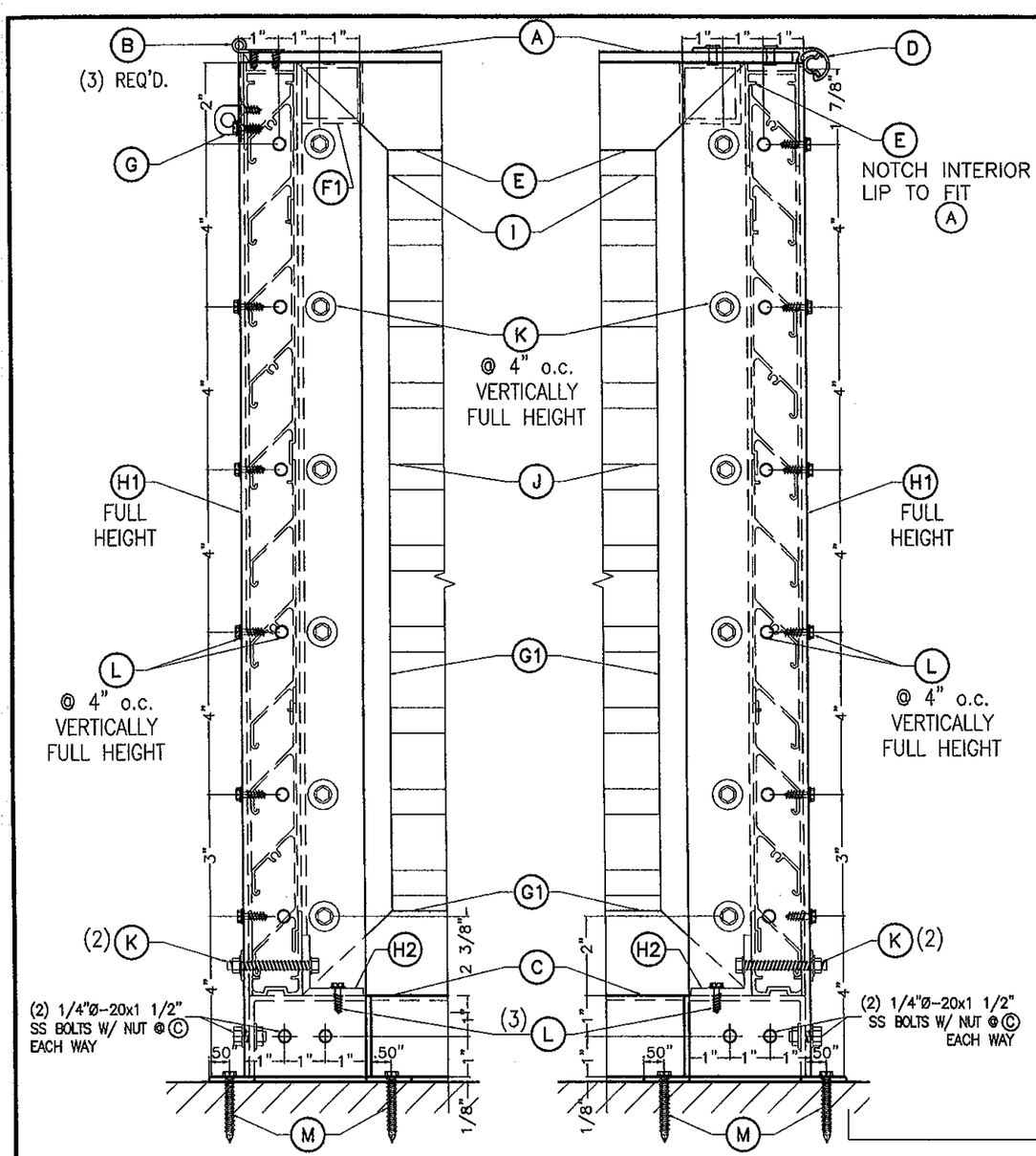

LEFT CORNER RIGHT CORNER

VIEW: Y

REAR EXTERIOR ELEVATION

SCALE: 1/4" = 1"

EXISTING STRUCTURE, SEE GENERAL NOTE 13/1 AND INSTALLATIONS DETAILS ON SHEET 12. (TYP. EACH SIDE)

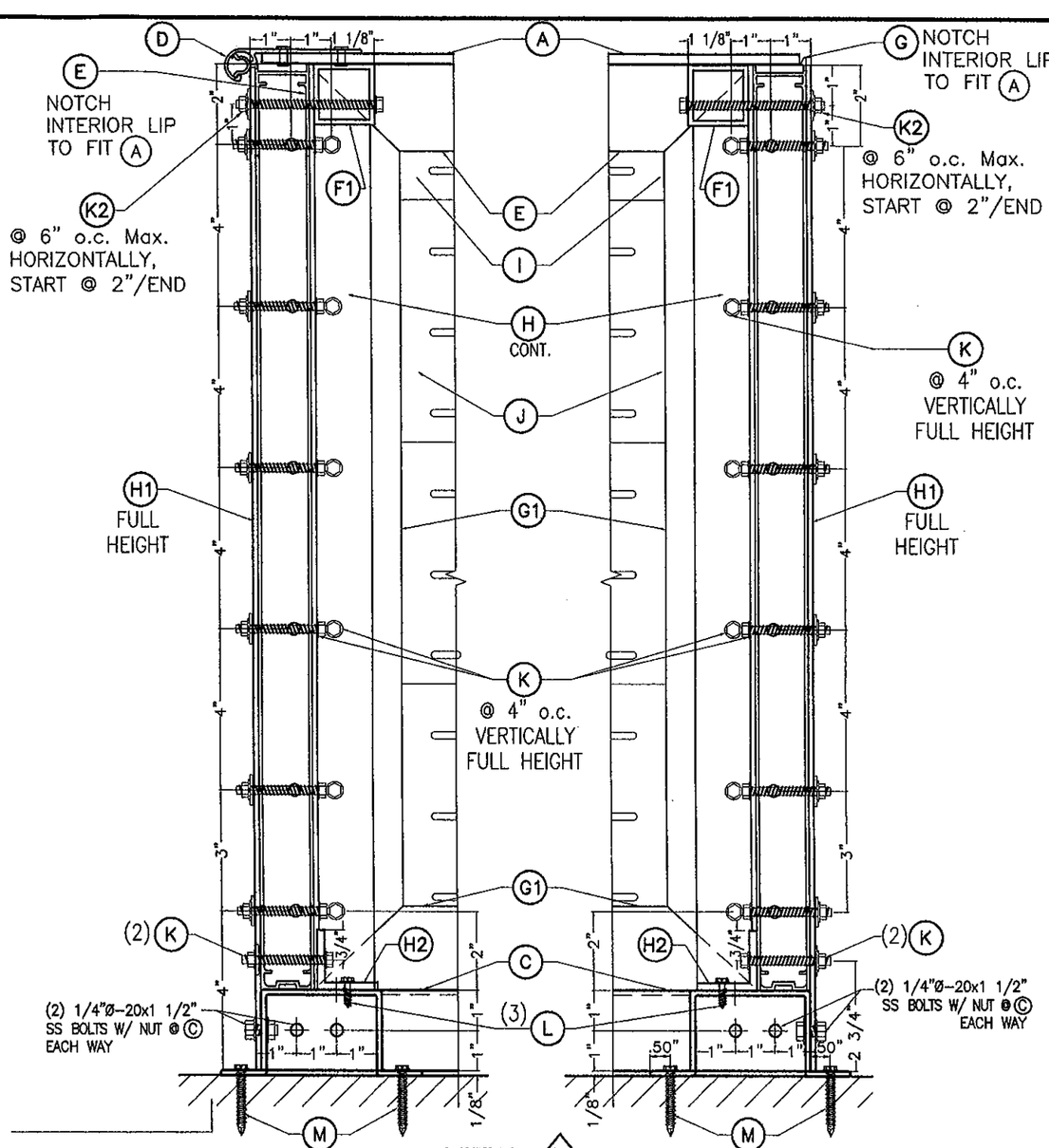

LEFT CORNER RIGHT CORNER

VIEW: Y

REAR INTERIOR ELEVATION

SCALE: 1/4" = 1"

PRODUCT REVISED
as complying with the Florida Building Code
Acceptance No 11-1206.06
Expiration Date 07/14/2016
By Miami Dade Product Control

MIAMI-DADE COUNTY

WALTER A. TILLIT JR. LICENSE No. 44167 STATE OF FLORIDA PROFESSIONAL ENGINEER

P.E. SEAL/SIGNATURE/DATE

FLORIDA BUILDING CODE (High Velocity Hurricane Zone)

©2011 RM ENTERPRISES, INC

TILTECO INC.
TILLIT TESTING & ENGINEERING COMPANY
6355 N.W. 36th. St., Ste. 305, VIRGINIA GARDENS, FL 33166
Phone : (305)871-1530 . Fax : (305)871-1531
e-mail: tilteco@aol.com
EB-0006719
WALTER A. TILLIT Jr. P.E.
FLORIDA Lic. # 44167

ALUMINUM FRAME CONDENSING UNIT ENCLOSURE

L.G./M.C.V./A.G. DRAWN BY:

MANUCY & ASSOC., INC.
d/b/a/ RM ENTERPRISES, INC.
352 A TALL PINES ROAD
WEST PALM BEACH, FL. 33413
TEL: (561) 682-1225; FAX: (561) 682-3611

11/16/11 DATE

11-119 DRAWING No

REV. No	DESCRIPTION	DATE	REV. No	DESCRIPTION	DATE
1	OLD 10-083	11/16/11	3		
2			4		

SHEET 10 OF 12

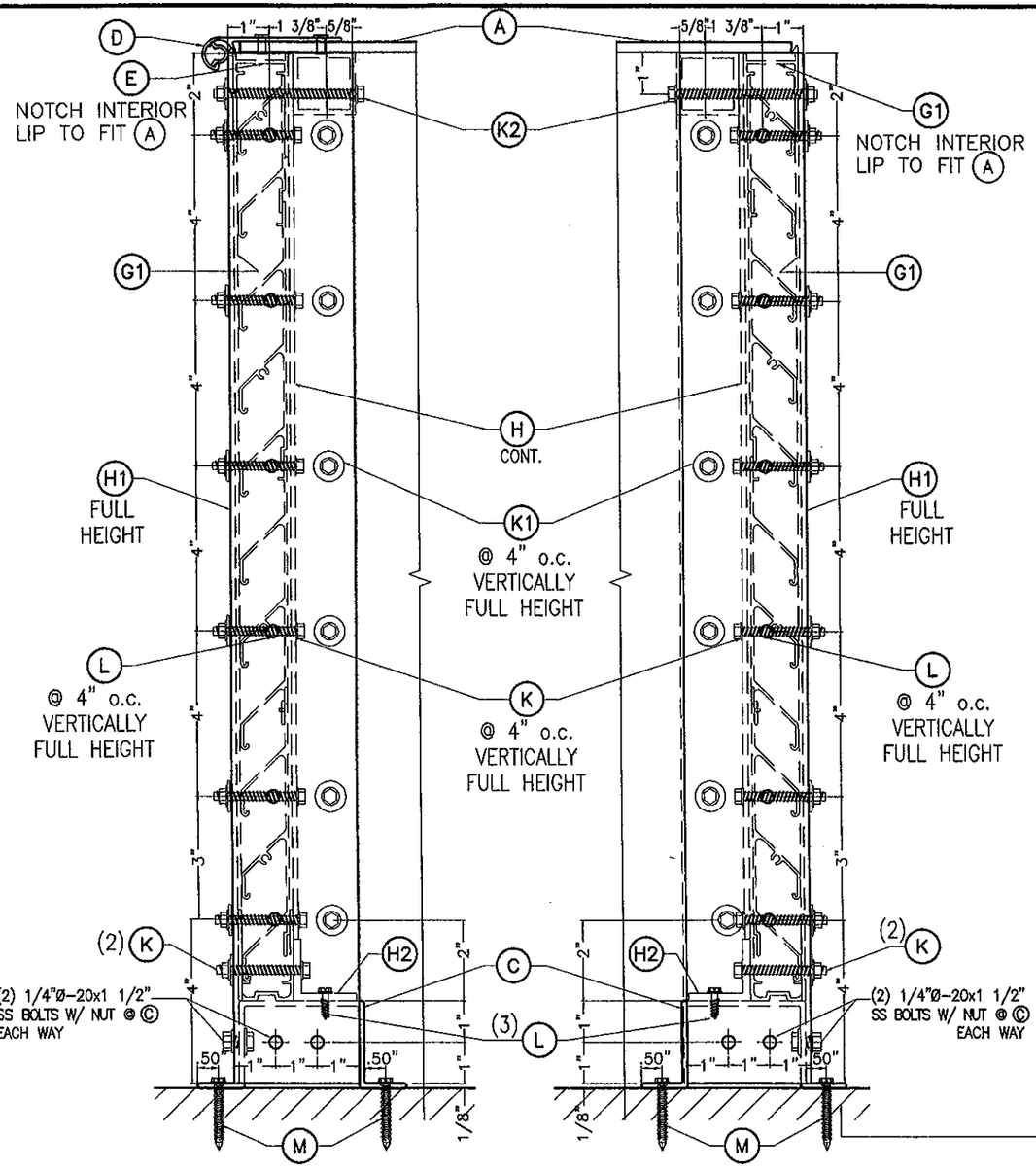

LEFT CORNER RIGHT CORNER

VIEW: Z

FRONT EXTERIOR ELEVATION

SCALE: 1/4" = 1"

EXISTING STRUCTURE, SEE GENERAL NOTE 13/1 AND INSTALLATIONS DETAILS ON SHEET 12. (TYP. EACH SIDE)

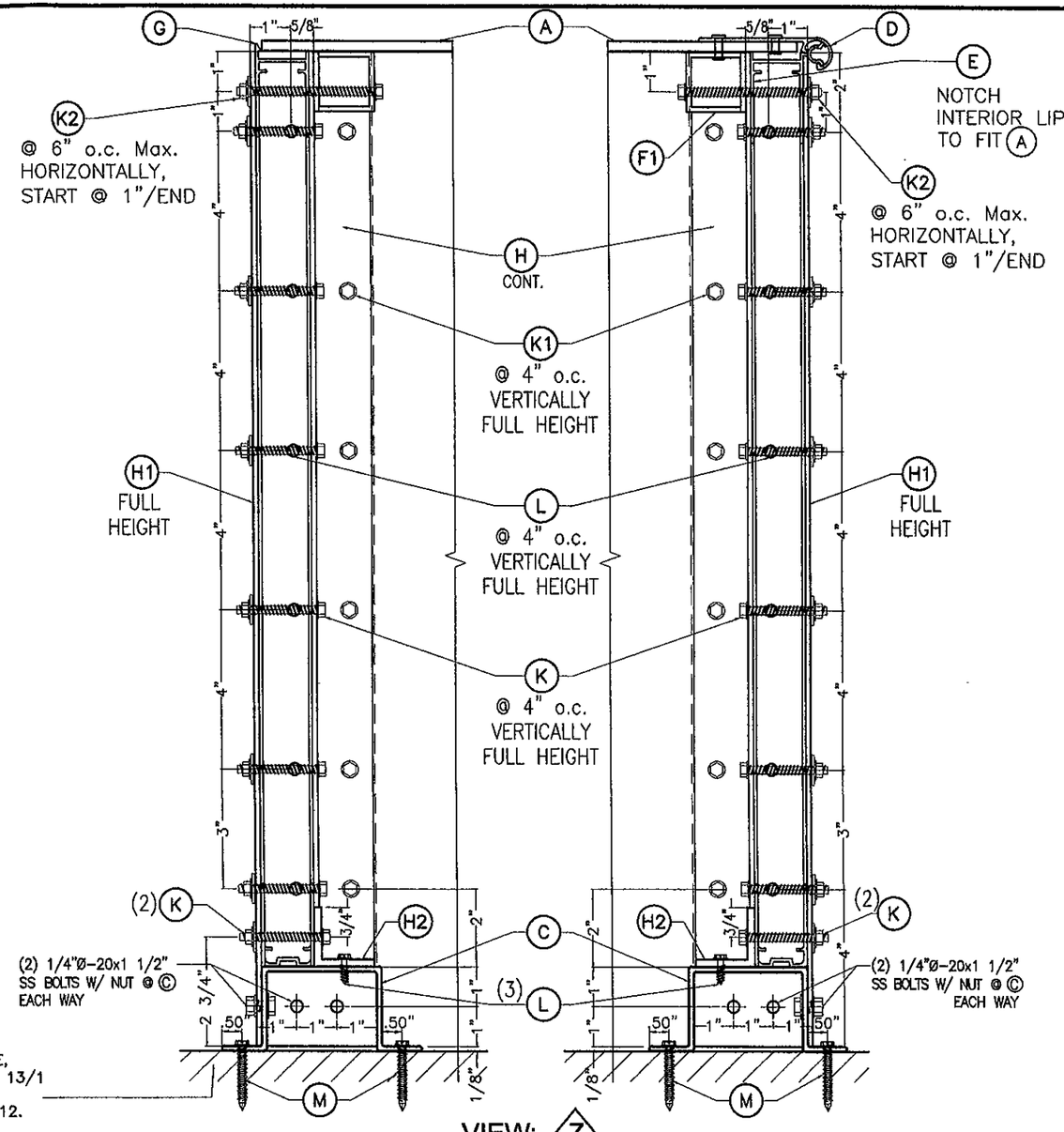

LEFT CORNER RIGHT CORNER

VIEW: Z

FRONT INTERIOR ELEVATION

SCALE: 1/4" = 1"

PRODUCT REVISED
as complying with the Florida Building Code
Acceptance No 11-1206.06
Expiration Date 07/14/2016
By Miami Dade Product Control

MIAMI-DADE COUNTY

WALTER A. TILLIT JR. LICENSE No 44167 STATE OF FLORIDA PROFESSIONAL ENGINEER

P.E. SEAL/SIGNATURE/DATE

FLORIDA BUILDING CODE (High Velocity Hurricane Zone)

©2011 RM ENTERPRISES, INC

TILTECO INC.
TILLIT TESTING & ENGINEERING COMPANY
6355 N.W. 36th. St., Ste. 305, VIRGINIA GARDENS, Fl. 33166
Phone : (305)871-1530 . Fax : (305)871-1531
e-mail: tilteco@aol.com
EB-0006719
WALTER A. TILLIT Jr. P.E.
FLORIDA Lic. # 44167

ALUMINUM FRAME CONDENSING UNIT ENCLOSURE

L.G./M.C.V./A.G. DRAWN BY:

MANUCY & ASSOC., INC.
d/b/a/ RM ENTERPRISES, INC.
352 A TALL PINES ROAD
WEST PALM BEACH, FL. 33413
TEL: (561) 682-1225; FAX: (561) 682-3611

11/16/11 DATE

11-119 DRAWING No

REV. No	DESCRIPTION	DATE	REV. No	DESCRIPTION	DATE
1	OLD 10-083	11/16/11	3		
2			4		

SHEET 11 OF 12

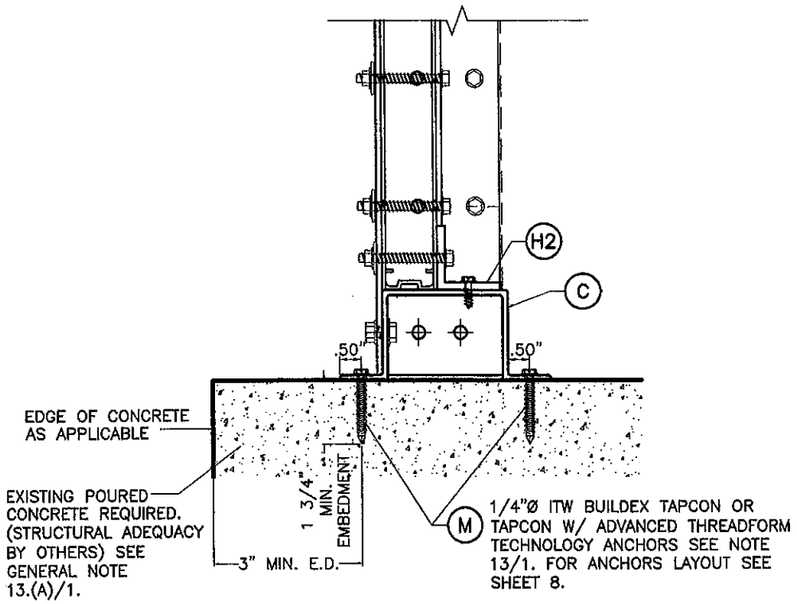

TO CONCRETE

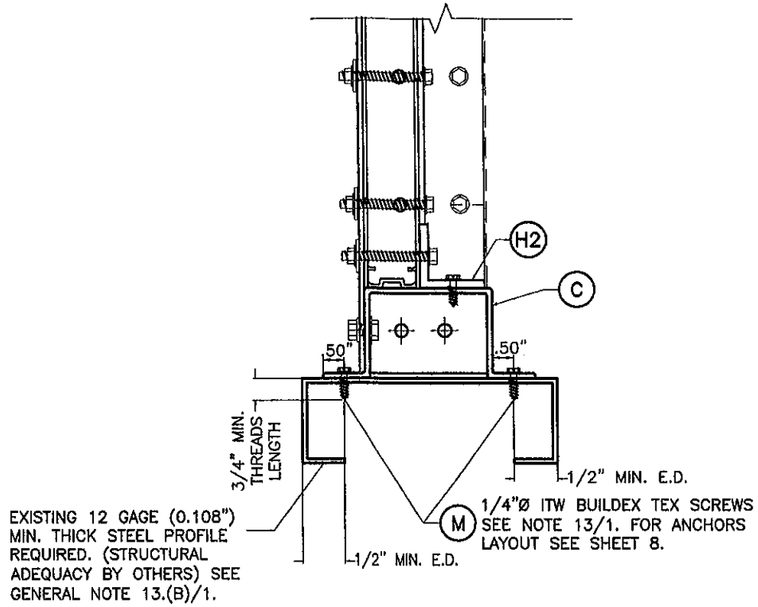

TO STEEL

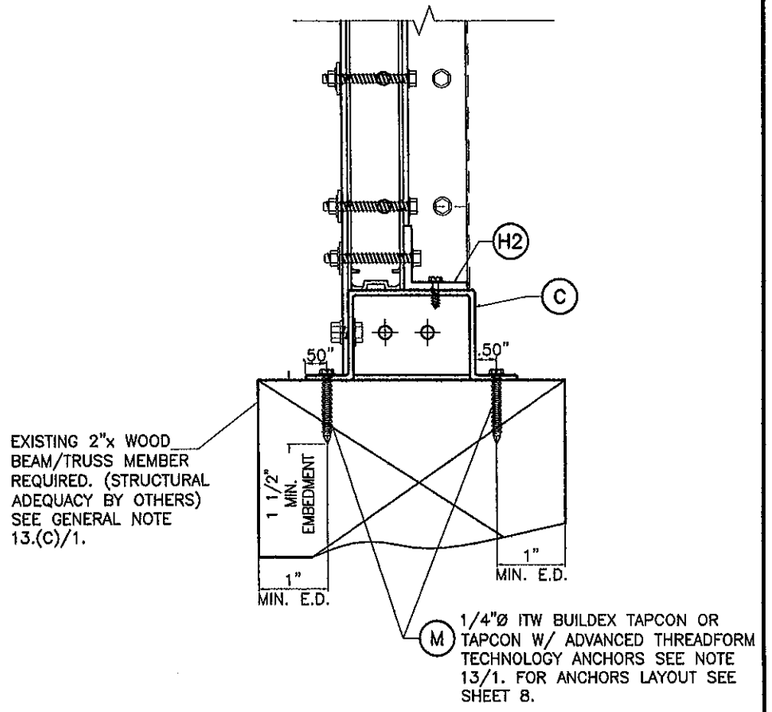

TO WOOD

INSTALLATION DETAILS FOR (C)

N.T.S.

PRODUCT REVISED
as complying with the Florida Building Code
Acceptance No 11-1206.06
Expiration Date 07/14/2016
By [signature]
Miami Dade Product Control

MIAMI-DADE COUNTY

WALTER A. TILLIT JR. LICENSE No. 44167 STATE OF FLORIDA PROFESSIONAL ENGINEER

P.E. SEAL/SIGNATURE/DATE

FLORIDA BUILDING CODE (High Velocity Hurricane Zone)

©2011 RM ENTERPRISES, INC

TILTECO INC.
TILLIT TESTING & ENGINEERING COMPANY
6355 N.W. 36th. St., Ste. 305, VIRGINIA GARDENS, Fl. 33166
Phone : (305)871-1530 . Fax : (305)871-1531
e-mail: tilteco@aol.com
EB-0006719
WALTER A. TILLIT Jr. P.E.
FLORIDA Lic. # 44167

ALUMINUM FRAME CONDENSING UNIT ENCLOSURE

MANUCY & ASSOC., INC.
d/b/a/ RM ENTERPRISES, INC.
352 A TALL PINES ROAD
WEST PALM BEACH, FL. 33413
TEL: (561) 682-1225; FAX: (561) 682-3611

REV. No	DESCRIPTION	DATE	REV. No	DESCRIPTION	DATE
1	QLD 10-083	11/16/11	3		
2			4		

L.G./M.C.V./A.G.
DRAWN BY:

11/16/11
DATE

11-119
DRAWING No

SHEET 12 OF 12