MIAMI-DADE COUNTY
DEPARTMENT OF PERMITTING, ENVIRONMENT, AND REGULATORY AFFAIRS (PERA)
BOARD AND CODE ADMINISTRATION DIVISION

MIAMI-DADE COUNTY
PRODUCT CONTROL SECTION
11805 SW 26 Street, Room 208
Miami, Florida 33175-2474
T (786) 315-2590 F (786) 315-2599
www.miamidade.gov/pera/

NOTICE OF ACCEPTANCE (NOA)

Oldcastle BuildingEnvelope™
803 Airport Road
Terrell, TX 75160

SCOPE:

This NOA is being issued under the applicable rules and regulations governing the use of construction materials. The documentation submitted has been reviewed and accepted by Miami-Dade County PERA - Product Control Section to be used in Miami Dade County and other areas where allowed by the Authority Having Jurisdiction (AHJ).

This NOA shall not be valid after the expiration date stated below. The Miami-Dade County Product Control Section (In Miami Dade County) and/or the AHJ (in areas other than Miami Dade County) reserve the right to have this product or material tested for quality assurance purposes. If this product or material fails to perform in the accepted manner, the manufacturer will incur the expense of such testing and the AHJ may immediately revoke, modify, or suspend the use of such product or material within their jurisdiction. PERA reserves the right to revoke this acceptance, if it is determined by Miami-Dade County Product Control Section that this product or material fails to meet the requirements of the applicable building code.

This product is approved as described herein, and has been designed to comply with the Florida Building Code, including the High Velocity Hurricane Zone.

DESCRIPTION: Series "HR-251 Captured" Aluminum Curtain Wall System – L.M.I.

APPROVAL DOCUMENT: Drawing No. **11-123**, titled "HR-251 Captured Curtain Wall System Large Missile Impact Insulated Glass", sheets 1 through 22, 22A, 23, 24, 24A and 25 thru 36 of 36, dated 11/17/11, with revision 1 dated 11/17/11, prepared by Tilteco, Inc., signed and sealed by Walter A. Tillit, Jr., P.E., bearing the Miami-Dade County Product Control Revision stamp with the Notice of Acceptance number and expiration date by the Miami-Dade County Product Control Section.

MISSILE IMPACT RATING: Large Missile Impact Resistant

LABELING: Each unit shall bear a permanent label with the manufacturer's name or logo, city, state, model/series, and following statement: "Miami-Dade County Product Control Approved", unless otherwise noted herein.

RENEWAL of this NOA shall be considered after a renewal application has been filed and there has been no change in the applicable building code negatively affecting the performance of this product.

TERMINATION of this NOA will occur after the expiration date or if there has been a revision or change in the materials, use, and/or manufacture of the product or process. Misuse of this NOA as an endorsement of any product, for sales, advertising or any other purposes shall automatically terminate this NOA. Failure to comply with any section of this NOA shall be cause for termination and removal of NOA.

ADVERTISEMENT: The NOA number preceded by the words Miami-Dade County, Florida, and followed by the expiration date may be displayed in advertising literature. If any portion of the NOA is displayed, then it shall be done in its entirety.

INSPECTION: A copy of this entire NOA shall be provided to the user by the manufacturer or its distributors and shall be available for inspection at the job site at the request of the Building Official.

This NOA **revises NOA # 11-0222.04** and consists of this page 1 and evidence pages E-1, E-2 and E-3, as well as approval document mentioned above.

The submitted documentation was reviewed by **Manuel Perez, P.E.**

MIAMI-DADE COUNTY APPROVED

NOTICE OF ACCEPTANCE: EVIDENCE SUBMITTED

A. DRAWINGS

1. Manufacturer's die drawings and sections.
2. Drawing No **11-123**, Sheets 1 thru 22, 22A, 23, 24, 24A and 25 thru 36 of 36, titled "HR-251 Captured Curtain Wall System Large Missile Impact Insulated Glass", dated 11/17/11 with revision 1 dated 11/17/11, prepared by Tilteco, Inc., signed and sealed by Walter A. Tillit, Jr., P.E.

B. TESTS

1. Test reports on: 1) Air Infiltration Test, per FBC, TAS 202-94
   2) Uniform Static Air Pressure Test, Loading per FBC TAS 202-94
   3) Water Resistance Test, per FBC, TAS 202-94
   4) Large Missile Impact Test per FBC, TAS 201-94
   5) Cyclic Wind Pressure Loading per FBC, TAS 203-94

   along with marked-up drawings and installation diagram of Vistawall HR-251 captured, wet glazed, curtain wall system, prepared by Architectural Testing, Inc., Test Report No. **ATITX-A4707.01-801-18**, specimen #1, dated 11/16/10 and revised on 01/06/11, signed and sealed by Shawn G. Collins, P.E.
   (Submitted under previous NOA #11-0222.04)
2. Test reports on: 1) Air Infiltration Test, per FBC, TAS 202-94
   2) Uniform Static Air Pressure Test, Loading per FBC TAS 202-94
   3) Water Resistance Test, per FBC, TAS 202-94
   4) Large Missile Impact Test per FBC, TAS 201-94
   5) Cyclic Wind Pressure Loading per FBC, TAS 203-94

   along with marked-up drawings and installation diagram of Vistawall HR-251 captured curtain wall system, prepared by Hurricane Test Laboratory, LLC, Test Report No. **HTL-0105-0117-05**, specimen **E3**, dated 09/08-13/05, signed and sealed by Vinu J. Abraham, P.E.
   (Submitted under previous NOA #09-0721.02)
3. Test reports on: 1) Air Infiltration Test, per FBC, TAS 202-94
   2) Uniform Static Air Pressure Test, Loading per FBC TAS 202-94
   3) Water Resistance Test, per FBC, TAS 202-94
   4) Small Missile Impact Test per FBC, TAS 201-94
   5) Large Missile Impact Test per FBC, TAS 201-94
   6) Cyclic Wind Pressure Loading per FBC, TAS 203-94

   along with marked-up drawings and installation diagram of Vistawall HR-251 captured curtain wall system, prepared by Hurricane Test Laboratory, LLC, Test Report No. **HTL-0105-0903-08**, specimens: **E2**, **E6**, **E6A** and **E8**, dated 09/18/08 to 12/17/08, signed and sealed by Vinu J. Abraham, P.E.
   (Submitted under previous NOA #09-0721.02)

Manuel Perez, P.E.
Product Control Examiner
NOA No. 11-1206.08
Expiration Date: December 09, 2014
Approval Date: February 23, 2012

NOTICE OF ACCEPTANCE: EVIDENCE SUBMITTED

4. Test reports on: 1) Air Infiltration Test, per FBC, TAS 202-94
   2) Uniform Static Air Pressure Test, Loading per FBC TAS 202-94
   3) Water Resistance Test, per FBC, TAS 202-94
   4) Small Missile Impact Test per FBC, TAS 201-94
   5) Large Missile Impact Test per FBC, TAS 201-94
   6) Cyclic Wind Pressure Loading per FBC, TAS 203-94

   along with marked-up drawings and installation diagram of Vistawall HR-251 captured curtain wall system, prepared by Hurricane Test Laboratory, LLC, Test Report No. **HTL-0105-0210-04**, elevation **E1**, dated 02/09/04, **HTL-0105-0306-04,** elevation **E3**, dated 03/03/04, **HTL-0105-0511-04**, elevations: **E2**, **E2A**, **E4** and **E7**, dated 05/10 to 08/12/04, **HTL-0105-0717-04**, elevation **E8**, dated 07/14-15/04 and **HTL-0105-0809-03**, elevation **E6**, dated 08/09-12/04; all signed and sealed by Vinu J. Abraham, P.E.
   (Submitted under previous NOA #09-0721.02)

C. CALCULATIONS

1. Anchor verification calculations and structural analysis, complying with FBC-2007 and FBC-2010, prepared by Tilteco, Inc., dated 01/13/11 and updated on 12/05/11, signed and sealed by Walter A. Tillit, Jr., P.E.
2. Glazing complies with ASTM E1300-04

D. QUALITY ASSURANCE

1. Miami-Dade Department of Permitting, Environment, and Regulatory Affairs (PERA).

E. MATERIAL CERTIFICATIONS

1. Notice of Acceptance No. **11–0624.02** issued to **E.I. DuPont DeNemours & Co.**, Inc. for their "**DuPont SentryGlas® Interlayer**" dated 08/25/11, expiring on 01/14/17.
2. Notice of Acceptance No. **08-1224.04** issued to Solutia Inc. for their **"Saflex Composite Glass Interlayer with PET Core"** dated 02/25/09, expiring on 12/11/13.
3. Notice of Acceptance No. **08-1118.07** issued to Oldcastle Glass, Inc. for their **"StormGlass Glass Interlayer"** dated 03/25/09, expiring on 12/11/13.

Manuel Perez, P.E.
Product Control Examiner
NOA No. 11-1206.08
Expiration Date: December 09, 2014
Approval Date: February 23, 2012

NOTICE OF ACCEPTANCE: EVIDENCE SUBMITTED

F. STATEMENTS

1. Statement letter of conformance, dated December 05, 2011, signed and sealed by Walter A. Tillit, Jr., P.E.
2. Statement letter of no financial interest, dated February 21, 2011, signed and sealed by Walter A. Tillit, Jr., P.E.
3. Statement letter of name change and Asset sale agreement from Oldcastle Glass Engineered Products to Oldcastle BuildingEnvelope, Inc.
   (Submitted under previous NOA #11-0222.04)
4. Laboratory compliance letter for Test Report No. **HTL-0105-0117-05** and **HTL-0105-0903-08,** issued by Hurricane Test Laboratory, LLC, Inc., dated 03/23/05, signed and sealed by Vinu J. Abraham, P.E.
   (Submitted under previous NOA #11-0222.04)
5. Laboratory compliance letter for Test Report No. **HTL-0105-0210-04, HTL-0105-0511-04, HTL-0105-0306-04, HTL-0105-0717-04 and HTL-0105-0809-03,** issued by Hurricane Test Laboratory, LLC, Inc., dated 12/10/04, signed and sealed by Vinu J. Abraham, P.E.
   (Submitted under previous NOA #11-0222.04)

G. OTHERS

1. Notice of Acceptance No. **11-0222.04**, issued to Oldcastle Building Envelope™ for their Series "HR-251 Captured" Aluminum Curtain Wall System – L.M.I., approved on 04/14/11 and expiring on 12/09/14.

Manuel Perez, P.E.
Product Control Examiner
NOA No. 11-1206.08
Expiration Date: December 09, 2014
Approval Date: February 23, 2012

NOTICE OF ACCEPTANCE: EVIDENCE SUBMITTED

F. STATEMENTS

1. Statement letter of conformance, complying with FBC-2010, dated December 05, 2011, signed and sealed by Walter A. Tillit, Jr., P.E.
2. Statement letter of no financial interest, dated February 21, 2011, signed and sealed by Walter A. Tillit, Jr., P.E.
3. Statement letter of name change and Asset sale agreement from Oldcastle Glass Engineered Products to Oldcastle BuildingEnvelope, Inc.
   (Submitted under previous NOA #11-0222.04)
4. Laboratory compliance letter for Test Report No. **HTL-0105-0117-05** and **HTL-0105-0903-08,** issued by Hurricane Test Laboratory, LLC, Inc., dated 03/23/05, signed and sealed by Vinu J. Abraham, P.E.
   (Submitted under previous NOA #11-0222.04)
5. Laboratory compliance letter for Test Report No. **HTL-0105-0210-04, HTL-0105-0511-04, HTL-0105-0306-04, HTL-0105-0717-04 and HTL-0105-0809-03,** issued by Hurricane Test Laboratory, LLC, Inc., dated 12/10/04, signed and sealed by Vinu J. Abraham, P.E.
   (Submitted under previous NOA #11-0222.04)

G. OTHERS

1. Notice of Acceptance No. **11-0222.04**, issued to Oldcastle Building Envelope™ for their Series "HR-251 Captured" Aluminum Curtain Wall System – L.M.I., approved on 04/14/11 and expiring on 12/09/14.

Manuel Perez, P.E.
Product Control Examiner
NOA No. 11-1206.08
Expiration Date: December 09, 2014
Approval Date: February 23, 2012

PRODUCT APPROVAL FOR HR-251 IMPACT-RESISTANT CAPTURED CURTAIN WALL SYSTEM WITH MULTIPLE GLAZING INFILLS FOR USE IN HURRICANE ZONES REQUIRING LARGE MISSILE IMPACT PROTECTION.

GENERAL NOTES:

1. HR-251 CAPTURED CURTAIN WALL SYSTEM LARGE MISSILE IMPACT INSULATED GLASS, SHOWN ON THIS PRODUCT APPROVAL DOCUMENT (P.A.D.) HAS BEEN VERIFIED FOR COMPLIANCE IN ACCORDANCE WITH THE 2007 EDITION OF THE FLORIDA BUILDING CODE. CURTAIN WALL MAY BE INSTALLED WITHIN HIGH VELOCITY HURRICANE ZONES.

   DESIGN WIND LOADS SHALL BE DETERMINED AS PER SECTION 1620 OF THE ABOVE MENTIONED CODES, USING ASCE 7-05 STANDARD FOR INSTALLATIONS UNDER 2007 FBC & ASCE 7-10 FOR INSTALLATIONS UNDER 2010 FBC AND SHALL NOT EXCEED THE MAXIMUM (A.S.D.) DESIGN PRESSURE RATINGS INDICATED ON NOTE 2. IN ORDER TO VERIFY THE ABOVE CONDITION, ULTIMATE DESIGN WIND LOADS DETERMINED PER ASCE 7-10 SHALL BE FIRST REDUCED TO A.S.D. DESIGN WIND LOADS BY MULTIPLYING THEM BY 0.6 IN ORDER TO TO COMPARE THESE W/ MAX. (A.S.D) DESIGN PRESSURE RATINGS INDICATED ON NOTE 2.

   IN ORDER TO VERIFY THAT ANCHORS ON THIS P.A.D., AS TESTED, WERE NOT OVERSTRESSED, A 33% INCREASE IN ALLOWABLE STRESS FOR WIND LOADS WAS **NOT** USED IN THEIR ANALYSIS.
   THIS PRODUCT'S ADEQUACY FOR IMPACT AND CYCLIC RESISTANCE HAS BEEN VERIFIED IN ACCORDANCE WITH SECTION 1626 OF THE ABOVE MENTIONED CODES AS PER PROTOCOLS TAS-201, TAS-202, TAS-203, PER HURRICANE TEST LABORATORY REPORTS # 0105-0903-08, 0105-0117-05 AND 0105-0210-04 (DOOR JAMB MULLION CERTIFICATION) AND ARCHITECTURAL TESTING LABORATORY REPORT # A4707.01-801-18 AND AS PER SUBMITTED STRUCTURAL CALCULATIONS, PERFORMED AS PER SECTION 1612 OF THE FLORIDA BUILDING CODE.

2. MAXIMUM A.S.D. DESIGN PRESSURE RATING FOR THIS CURTAIN WALL SHALL BE AS SHOWN ON SHEETS 8, 9, 10, 12, 13 AND 14 THRU 17, AND 22A.

3. THIS PRODUCT WILL NOT REQUIRE A HURRICANE PROTECTION DEVICE FOR INSTALLATIONS UP TO 30 FEET ABOVE GRADE.

4. THIS PRODUCT IS APPROVED FOR AIR/WATER INFILTRATION (15.0 PSF WATER PRESSURE).

5. HR-251 CAPTURED CURTAIN WALL SYSTEM LARGE MISSILE IMPACT INSULATED GLASS SHALL COMPLY WITH SECTIONS 2406.1, 2411.4.1 AND 2411.4.2 OF THE FLORIDA BUILDING CODE.

6. ALL STEEL FRAMING SHALL BE WELDED IN ACCORDANCE WITH THE AMERICAN WELDING SOCIETY A.W.S. D.1.1 REGULATIONS. USE CERTIFIED WELDERS. USE E-70XX ELECTRODES. ALL JOINT WELDING BETWEEN ANGLES AND STEEL STRUCTURE SHALL BE 3/16" FILLET WELD TYPE.

7. PROVIDE 3/4" MAX. LOAD BEARING SHIM (TYP.), WHEN ALLOWED BY THIS P.A.D.

8. SEE ANCHOR SCHEDULES ON SHEETS 12, 13 AND 14 THRU 17 FOR ANCHOR TYPE IDENTIFICATION AND SPACING.

9. REMAINING COMPONENTS FOR THIS CURTAIN WALL SYSTEM SHALL BE AS INDICATED ON BILL OF MATERIALS, SHEETS 4 AND 5 OF THIS DRAWING.

10. ALL ALUMINUM EXTRUSIONS IN CONTACT WITH STEEL AND CONCRETE SHALL COMPLY WITH SECTIONS 2003.8.4.2 AND 2003.8.4.4 OF THE FLORIDA BUILDING CODE, RESPECTIVELY.

11. SHOP DRAWINGS PREPARED BASED ON THIS APPROVAL AND TAKING INTO ACCOUNT THE SPECIFIC JOB CONDITIONS, SHALL BE SUBMITTED TO THE BUILDING OFFICIAL AS PART OF THE PERMIT DOCUMENTS.

12. SUBSTRATE MATERIAL NOTED ON THESE DRAWINGS AS "BY OTHERS" MUST WITHSTAND THE LOADS IMPOSED BY THE CURTAIN WALL SYSTEM.

13. THIS PRODUCT'S INSTALLATION SHALL COMPLY WITH ALL SPECS INDICATED IN THIS DRAWING PLUS ANY BUILDING AND ZONING REGULATIONS PROVIDED BY THE JURISDICTION WHERE PERMIT IS APPLIED TO.

14. (a) THIS P.A.D. PREPARED BY THIS ENGINEER IS GENERIC AND DOES NOT PROVIDE INFORMATION FOR A SITE SPECIFIC PROJECT; i.e. WHERE THE SITE CONDITIONS DEVIATE FROM THE P.A.D.

    (b) CONTRACTOR TO BE RESPONSIBLE FOR THE SELECTION, PURCHASE AND INSTALLATION INCLUDING LIFE SAFETY OF THIS PRODUCT, BASED ON THIS P.A.D., PROVIDED HE/SHE DOES NOT DEVIATE FROM THE CONDITIONS DETAILED ON THIS DOCUMENT. CONSTRUCTION SAFETY AT SITE IS THE CONTRACTOR'S RESPONSIBILITY.

    (c) THIS P.A.D. WILL BE CONSIDERED INVALID IF ALTERED BY ANY MEANS.

    (d) SITE SPECIFIC PROJECTS SHALL BE PREPARED BY A FLORIDA REGISTERED ENGINEER OR ARCHITECT WHICH WILL BECOME THE ENGINEER OF RECORD (E.O.R.) FOR THE PROJECT AND WHO WILL BE RESPONSIBLE FOR THE PROPER USE OF THE P.A.D. ENGINEER OF RECORD, ACTING AS DELEGATED ENGINEER TO THE P.A.D. ENGINEER, SHALL SUBMIT TO THIS LATTER THE SITE SPECIFIC DRAWINGS FOR REVIEW.

    (e) ORIGINAL P.A.D. SHALL BEAR THE DATE AND ORIGINAL SEAL AND SIGNATURE OF THE PROFESSIONAL ENGINEER OF RECORD THAT PREPARED IT.

15. CURTAIN WALL MANUFACTURER'S LABEL SHALL BE PLACED ON A READILY VISIBLE LOCATION. ONE LABEL SHALL BE PLACED FOR EVERY UNIT. LABEL SHALL READ AS FOLLOWS:

    Oldcastle
    BuildingEnvelope™
    TERRELL TX.
    MIAMI-DADE COUNTY PRODUCT CONTROL APPROVED.
    SERIES (HR-251 CAPTURED) ALUMINUM CURTAIN WALL SYSTEM - L.M.I.

INDEX:

SHEET 1: GENERAL NOTES, INDEX AND INSTRUCTIONS.
SHEET 2: HR-251 IMPACT RESISTANT CAPTURED CURTAIN WALL SYSTEM COMPONENTS.
SHEET 3: HR-251 IMPACT RESISTANT CAPTURED CURTAIN WALL SYSTEM COMPONENTS (CONTINUED).
SHEET 4: BILL OF MATERIALS.
SHEET 5: BILL OF MATERIALS (CONTINUED).
SHEET 6: ISOMETRIC ELEVATION FOR HR-251 IMPACT RESISTANT CAPTURED CURTAIN WALL SYSTEM.
SHEET 7: TYPICAL GLAZING DETAILS.
SHEET 8: MAX. FRAME WIDTH "b" & FRAME LENGTH "a" VERSUS A.S.D. DESIGN PRESSURE RATING (p.s.f.) SCHEDULE.
SHEET 9: MAX. A.S.D. DESIGN PRESSURE RATING FOR SINGLE SPAN STANDARD AND CORNER MULLIONS.
SHEET 10: MAX. A.S.D. DESIGN PRESSURE RATING FOR TWIN SPAN STANDARD AND CORNER MULLIONS.
SHEET 11: OPTIONS FOR TWIN SPAN STANDARD AND CORNER MULLIONS INSTALLATION.
SHEET 12: MAX. A.S.D. DESIGN PRESSURE RATING FOR SINGLE SPAN (HEAD & SILL) & TWIN SPAN (SILL ONLY) MULLION CONNECTIONS.
SHEET 13: MAX. A.S.D. DESIGN PRESSURE RATING FOR TWIN SPAN MULLION HEAD ANCHOR CONNECTIONS.
SHEET 14: MAX. A.S.D. DESIGN PRESSURE RATING FOR JAMBS AT SINGLE SPAN CURTAIN WALL FASTENED TO EXISTING STRUCTURE W/ 3/8"ø FASTENERS.
SHEET 15: MAX. A.S.D. DESIGN PRESSURE RATING FOR JAMBS AT TWIN SPAN CURTAIN WALL FASTENED TO EXISTING STRUCTURE W/ 3/8"ø FASTENER
SHEET 16: MAX. A.S.D. DESIGN PRESSURE RATING FOR JAMBS AT SINGLE SPAN CURTAIN WALL FASTENED TO EXISTING STRUCTURE W/ 1/2"ø FASTENERS.
SHEET 17: MAX. A.S.D. DESIGN PRESSURE RATING FOR JAMBS AT TWIN SPAN CURTAIN WALL FASTENED TO EXISTING STRUCTURE W/ 1/2"ø FASTENERS.
SHEET 18: HEAD CONNECTION DETAILS (SIDE VIEWS).
SHEET 19: HORIZONTAL CONNECTION DETAILS (SIDE VIEWS)
SHEET 20: SILL CONNECTION DETAILS (SIDE VIEWS).
SHEET 21: HORIZONTAL SECTIONS AT STANDARD MULLION DETAILS (PLAN).
SHEET 22: JAMB MULLIONS CONNECTIONS AT HORIZONTALS (PLAN).
SHEET 22A: JAMB MULLIONS NOT ATTACHED TO EXISTING STRUCTURE FOR SINGLE SPAN ONLY (PLAN), AND MAX. A.S.D. DESGIN PRESSURE RATING FOR SINGLE SPAN JAMB MULLIONS W/O ANCHORAGE
SHEET 23: CORNER MULLION DETAILS (PLAN).
SHEET 24: JAMB MULLIONS CONNECTIONS AT INSIDE CORNER (PLAN).
SHEET 24A: JAMB MULLIONS NOT ATTACHED TO INSIDE CORNER OF EXISTING STRUCTURE FOR SINGLE SPAN ONLY (PLAN).
SHEET 25: SILL & HEAD CONNECTION DETAILS FOR SINGLE SPAN & SILL CONNECTION DETAIL AT TWIN SPAN (PLANS).
SHEET 26: OPTION #1 FOR HEAD CONNECTION OF TWIN SPAN STANDARD MULLIONS.
SHEET 27: OPTION #2 FOR HEAD CONNECTION OF TWIN SPAN STANDARD MULLIONS.
SHEET 28: HEAD CONNECTION OF TWIN SPAN JAMBS.
SHEET 29: HEAD CONNECTION DETAIL FOR TWIN SPAN CORNER MULLION.
SHEET 30: MULLION AND JAMB SPLICES AT TWIN SPAN ONLY (PLAN).
SHEET 31: MULLION AND JAMB SPLICES AT TWIN SPAN ONLY (SIDE VIEW)
SHEET 32: CORNER MULLION SPLICE AT TWIN SPAN (PLAN).
SHEET 33: STANDARD AND CORNER MULLION CONNECTION TO EXISTING INTERMEDIATE FLOOR STRUCTURE W/ DEAD AND WIND LOAD ANCHORS.
SHEET 34: CORNER MULLION CONNECTION TO EXISTING INTERMEDIATE FLOOR STRUCTURE W/ DEAD & WIND LOAD ANCHORS (PLAN).
SHEET 35: DOOR HEADER CONNECTION TO CURTAIN WALL HORIZONTALS & DOOR SILL CONNECTION TO POURED CONCRETE STRUCTURE AND TO ADJACENT CURTAIN WALL MULLION "F".
SHEET 36: DOOR JAMBS CONNECTION TO CURTAIN WALL.

INSTRUCTIONS:

STEP 1: DETERMINE A.S.D. DESIGN WIND LOAD REQUIREMENTS BASED ON WIND VELOCITY, BUILDING HEIGHT, WIND ZONE, USING APPLICABLE ASCE 7 STANDARDS.

STEP 2: GO TO SCHEDULE ON SHEET 8 TO DETERMINE MAXIMUM A.S.D. DESIGN PRESSURE RATING "W" (psf) OF DESIRED GLASS SIZE BASED ON GLASS PANEL DIMENSIONS.

STEP 3: DETERMINE MAXIMUM MULLION AND JAMB SPAN "L"(FT) FOR A GIVEN MULLION EFFECTIVE SPACING "b", FOR SINGLE AND TWIN SPANS ON SCHEDULES ON SHEETS 9, 10 AND 22A.

STEP 4: USING SCHEDULES ON SHEETS 12, 13 AND 14 THRU 17 SELECT ANCHOR OPTION FOR MULLIONS AND JAMBS WITH A.S.D. DESIGN PRESSURE RATING EQUAL OR GREATER THAN A.S.D. DESIGN LOAD SPECIFIED IN STEP 1.

STEP 5: USING SCHEDULE ON SHEET 19, VERIFY MAXIMUM A.S.D. DESIGN PRESSURE RATING OF HORIZONTALS (IF USED) AND HORIZONTAL EXPANSION.

STEP 6: THE LOWEST VALUE OF A.S.D. DESIGN PRESSURE RATING RESULTING FROM STEPS 2, 3, 4 AND 5 SHALL APPLY TO THE ENTIRE SYSTEM.

FLORIDA BUILDING CODE (High Velocity Hurricane Zone)

©2011 TILTECO, INC

HR-251 CAPTURED CURTAIN WALL SYSTEM
LARGE MISSILE IMPACT INSULATED GLASS

F.P./M.C.Y./A.G. DRAWN BY
11/17/11 DATE
11-123 DRAWING No
SHEET 1 OF 36

REV. No	DESCRIPTION	DATE	REV. No	DESCRIPTION	DATE
1	D.D. 11-022	11/17/11	3	-	-
2			4	-	-

TILTECO INC.
TILLIT TESTING & ENGINEERING COMPANY
8555 N.W. 36th. St., Ste. 305, VIRGINIA GARDENS, FLORIDA 33166
Phone : (305)871-1530 - Fax : (305)871-1531
e-mail: tilteco@aol.com
EB-0006719
WALTER A. TILLIT Jr., P.E.
FLORIDA Lic. # 44167

Oldcastle BuildingEnvelope™
803 Airport Rd - Terrell, TX 75160
www.OldcastleBE.com - Phone 800-869-4567

WALTER A. TILLIT JR. LICENSE No. 44167 STATE OF FLORIDA PROFESSIONAL ENGINEER

P.E. SIGNATURE/DATE

PRODUCT REVISED
as complying with the Florida Building Code
Acceptance No. 11-1206.08
Expiration Date DEC. 7, 2014
By Miami-Dade Product Control

MIAMI-DADE COUNTY

PRODUCT APPROVAL FOR HR-251 IMPACT-RESISTANT CAPTURED CURTAIN WALL SYSTEM WITH MULTIPLE GLAZING INFILLS FOR USE IN HURRICANE ZONES REQUIRING LARGE MISSILE IMPACT PROTECTION.

GENERAL NOTES:

1. HR-251 CAPTURED CURTAIN WALL SYSTEM LARGE MISSILE IMPACT INSULATED GLASS, SHOWN ON THIS PRODUCT APPROVAL DOCUMENT (P.A.D.) HAS BEEN VERIFIED FOR COMPLIANCE IN ACCORDANCE WITH THE 2007 EDITION OF THE FLORIDA BUILDING CODE. CURTAIN WALL MAY BE INSTALLED WITHIN HIGH VELOCITY HURRICANE ZONES.

   DESIGN WIND LOADS SHALL BE DETERMINED AS PER SECTION 1620 OF THE ABOVE MENTIONED CODES, USING ASCE 7-05 STANDARD FOR INSTALLATIONS UNDER 2007 FBC & ASCE 7-10 FOR INSTALLATIONS UNDER 2010 FBC AND SHALL NOT EXCEED THE MAXIMUM (A.S.D.) DESIGN PRESSURE RATINGS INDICATED ON NOTE 2. IN ORDER TO VERIFY THE ABOVE CONDITION, ULTIMATE DESIGN WIND LOADS DETERMINED PER ASCE 7-10 SHALL BE FIRST REDUCED TO A.S.D. DESIGN WIND LOADS BY MULTIPLYING THEM BY 0.6 IN ORDER TO TO COMPARE THESE W/ MAX. (A.S.D) DESIGN PRESSURE RATINGS INDICATED ON NOTE 2.

   IN ORDER TO VERIFY THAT ANCHORS ON THIS P.A.D., AS TESTED, WERE NOT OVERSTRESSED, A 33% INCREASE IN ALLOWABLE STRESS FOR WIND LOADS WAS **NOT** USED IN THEIR ANALYSIS.
   THIS PRODUCT'S ADEQUACY FOR IMPACT AND CYCLIC RESISTANCE HAS BEEN VERIFIED IN ACCORDANCE WITH SECTION 1626 OF THE ABOVE MENTIONED CODES AS PER PROTOCOLS TAS-201, TAS-202, TAS-203, PER HURRICANE TEST LABORATORY REPORTS # 0105-0903-08, 0105-0117-05 AND 0105-0210-04 (DOOR JAMB MULLION CERTIFICATION) AND ARCHITECTURAL TESTING LABORATORY REPORT # A4707.01-801-18 AND AS PER SUBMITTED STRUCTURAL CALCULATIONS, PERFORMED AS PER SECTION 1612 OF THE FLORIDA BUILDING CODE.

2. MAXIMUM A.S.D. DESIGN PRESSURE RATING FOR THIS CURTAIN WALL SHALL BE AS SHOWN ON SHEETS 8, 9, 10, 12, 13 AND 14 THRU 17, AND 22A.

3. THIS PRODUCT WILL NOT REQUIRE A HURRICANE PROTECTION DEVICE FOR INSTALLATIONS UP TO 30 FEET ABOVE GRADE.

4. THIS PRODUCT IS APPROVED FOR AIR/WATER INFILTRATION (15.0 PSF WATER PRESSURE).

5. HR-251 CAPTURED CURTAIN WALL SYSTEM LARGE MISSILE IMPACT INSULATED GLASS SHALL COMPLY WITH SECTIONS 2406.1, 2411.4.1 AND 2411.4.2 OF THE FLORIDA BUILDING CODE.

6. ALL STEEL FRAMING SHALL BE WELDED IN ACCORDANCE WITH THE AMERICAN WELDING SOCIETY A.W.S. D.1.1 REGULATIONS. USE CERTIFIED WELDERS. USE E-70XX ELECTRODES. ALL JOINT WELDING BETWEEN ANGLES AND STEEL STRUCTURE SHALL BE 3/16" FILLET WELD TYPE.

7. PROVIDE 3/4" MAX. LOAD BEARING SHIM (TYP.), WHEN ALLOWED BY THIS P.A.D.

8. SEE ANCHOR SCHEDULES ON SHEETS 12, 13 AND 14 THRU 17 FOR ANCHOR TYPE IDENTIFICATION AND SPACING.

9. REMAINING COMPONENTS FOR THIS CURTAIN WALL SYSTEM SHALL BE AS INDICATED ON BILL OF MATERIALS, SHEETS 4 AND 5 OF THIS DRAWING.

10. ALL ALUMINUM EXTRUSIONS IN CONTACT WITH STEEL AND CONCRETE SHALL COMPLY WITH SECTIONS 2003.8.4.2 AND 2003.8.4.4 OF THE FLORIDA BUILDING CODE, RESPECTIVELY.

11. SHOP DRAWINGS PREPARED BASED ON THIS APPROVAL AND TAKING INTO ACCOUNT THE SPECIFIC JOB CONDITIONS, SHALL BE SUBMITTED TO THE BUILDING OFFICIAL AS PART OF THE PERMIT DOCUMENTS.

12. SUBSTRATE MATERIAL NOTED ON THESE DRAWINGS AS "BY OTHERS" MUST WITHSTAND THE LOADS IMPOSED BY THE CURTAIN WALL SYSTEM.

13. THIS PRODUCT'S INSTALLATION SHALL COMPLY WITH ALL SPECS INDICATED IN THIS DRAWING PLUS ANY BUILDING AND ZONING REGULATIONS PROVIDED BY THE JURISDICTION WHERE PERMIT IS APPLIED TO.

14. (a) THIS P.A.D. PREPARED BY THIS ENGINEER IS GENERIC AND DOES NOT PROVIDE INFORMATION FOR A SITE SPECIFIC PROJECT; i.e. WHERE THE SITE CONDITIONS DEVIATE FROM THE P.A.D.

    (b) CONTRACTOR TO BE RESPONSIBLE FOR THE SELECTION, PURCHASE AND INSTALLATION INCLUDING LIFE SAFETY OF THIS PRODUCT, BASED ON THIS P.A.D., PROVIDED HE/SHE DOES NOT DEVIATE FROM THE CONDITIONS DETAILED ON THIS DOCUMENT. CONSTRUCTION SAFETY AT SITE IS THE CONTRACTOR'S RESPONSIBILITY.

    (c) THIS P.A.D. WILL BE CONSIDERED INVALID IF ALTERED BY ANY MEANS.

    (d) SITE SPECIFIC PROJECTS SHALL BE PREPARED BY A FLORIDA REGISTERED ENGINEER OR ARCHITECT WHICH WILL BECOME THE ENGINEER OF RECORD (E.O.R.) FOR THE PROJECT AND WHO WILL BE RESPONSIBLE FOR THE PROPER USE OF THE P.A.D. ENGINEER OF RECORD, ACTING AS DELEGATED ENGINEER TO THE P.A.D. ENGINEER, SHALL SUBMIT TO THIS LATTER THE SITE SPECIFIC DRAWINGS FOR REVIEW.

    (e) ORIGINAL P.A.D. SHALL BEAR THE DATE AND ORIGINAL SEAL AND SIGNATURE OF THE PROFESSIONAL ENGINEER OF RECORD THAT PREPARED IT.

15. CURTAIN WALL MANUFACTURER'S LABEL SHALL BE PLACED ON A READILY VISIBLE LOCATION. ONE LABEL SHALL BE PLACED FOR EVERY UNIT. LABEL SHALL READ AS FOLLOWS:

    Oldcastle
    BuildingEnvelope™
    TERRELL TX.
    MIAMI-DADE COUNTY PRODUCT CONTROL APPROVED.
    SERIES (HR-251 CAPTURED) ALUMINUM CURTAIN WALL SYSTEM - L.M.I.

INDEX:

SHEET 1: GENERAL NOTES, INDEX AND INSTRUCTIONS.
SHEET 2: HR-251 IMPACT RESISTANT CAPTURED CURTAIN WALL SYSTEM COMPONENTS.
SHEET 3: HR-251 IMPACT RESISTANT CAPTURED CURTAIN WALL SYSTEM COMPONENTS (CONTINUED).
SHEET 4: BILL OF MATERIALS.
SHEET 5: BILL OF MATERIALS (CONTINUED).
SHEET 6: ISOMETRIC ELEVATION FOR HR-251 IMPACT RESISTANT CAPTURED CURTAIN WALL SYSTEM.
SHEET 7: TYPICAL GLAZING DETAILS.
SHEET 8: MAX. FRAME WIDTH "b" & FRAME LENGTH "a" VERSUS A.S.D. DESIGN PRESSURE RATING (p.s.f.) SCHEDULE.
SHEET 9: MAX. A.S.D. DESIGN PRESSURE RATING FOR SINGLE SPAN STANDARD AND CORNER MULLIONS.
SHEET 10: MAX. A.S.D. DESIGN PRESSURE RATING FOR TWIN SPAN STANDARD AND CORNER MULLIONS.
SHEET 11: OPTIONS FOR TWIN SPAN STANDARD AND CORNER MULLIONS INSTALLATION.
SHEET 12: MAX. A.S.D. DESIGN PRESSURE RATING FOR SINGLE SPAN (HEAD & SILL) & TWIN SPAN (SILL ONLY) MULLION CONNECTIONS.
SHEET 13: MAX. A.S.D. DESIGN PRESSURE RATING FOR TWIN SPAN MULLION HEAD ANCHOR CONNECTIONS.
SHEET 14: MAX. A.S.D. DESIGN PRESSURE RATING FOR JAMBS AT SINGLE SPAN CURTAIN WALL FASTENED TO EXISTING STRUCTURE W/ 3/8"ø FASTENERS.
SHEET 15: MAX. A.S.D. DESIGN PRESSURE RATING FOR JAMBS AT TWIN SPAN CURTAIN WALL FASTENED TO EXISTING STRUCTURE W/ 3/8"ø FASTENER
SHEET 16: MAX. A.S.D. DESIGN PRESSURE RATING FOR JAMBS AT SINGLE SPAN CURTAIN WALL FASTENED TO EXISTING STRUCTURE W/ 1/2"ø FASTENERS.
SHEET 17: MAX. A.S.D. DESIGN PRESSURE RATING FOR JAMBS AT TWIN SPAN CURTAIN WALL FASTENED TO EXISTING STRUCTURE W/ 1/2"ø FASTENERS.
SHEET 18: HEAD CONNECTION DETAILS (SIDE VIEWS).
SHEET 19: HORIZONTAL CONNECTION DETAILS (SIDE VIEWS)
SHEET 20: SILL CONNECTION DETAILS (SIDE VIEWS).
SHEET 21: HORIZONTAL SECTIONS AT STANDARD MULLION DETAILS (PLAN).
SHEET 22: JAMB MULLIONS CONNECTIONS AT HORIZONTALS (PLAN).
SHEET 22A: JAMB MULLIONS NOT ATTACHED TO EXISTING STRUCTURE FOR SINGLE SPAN ONLY (PLAN), AND MAX. A.S.D. DESGIN PRESSURE RATING FOR SINGLE SPAN JAMB MULLIONS W/O ANCHORAGE
SHEET 23: CORNER MULLION DETAILS (PLAN).
SHEET 24: JAMB MULLIONS CONNECTIONS AT INSIDE CORNER (PLAN).
SHEET 24A: JAMB MULLIONS NOT ATTACHED TO INSIDE CORNER OF EXISTING STRUCTURE FOR SINGLE SPAN ONLY (PLAN).
SHEET 25: SILL & HEAD CONNECTION DETAILS FOR SINGLE SPAN & SILL CONNECTION DETAIL AT TWIN SPAN (PLANS).
SHEET 26: OPTION #1 FOR HEAD CONNECTION OF TWIN SPAN STANDARD MULLIONS.
SHEET 27: OPTION #2 FOR HEAD CONNECTION OF TWIN SPAN STANDARD MULLIONS.
SHEET 28: HEAD CONNECTION OF TWIN SPAN JAMBS.
SHEET 29: HEAD CONNECTION DETAIL FOR TWIN SPAN CORNER MULLION.
SHEET 30: MULLION AND JAMB SPLICES AT TWIN SPAN ONLY (PLAN).
SHEET 31: MULLION AND JAMB SPLICES AT TWIN SPAN ONLY (SIDE VIEW)
SHEET 32: CORNER MULLION SPLICE AT TWIN SPAN (PLAN).
SHEET 33: STANDARD AND CORNER MULLION CONNECTION TO EXISTING INTERMEDIATE FLOOR STRUCTURE W/ DEAD AND WIND LOAD ANCHORS.
SHEET 34: CORNER MULLION CONNECTION TO EXISTING INTERMEDIATE FLOOR STRUCTURE W/ DEAD & WIND LOAD ANCHORS (PLAN).
SHEET 35: DOOR HEADER CONNECTION TO CURTAIN WALL HORIZONTALS & DOOR SILL CONNECTION TO POURED CONCRETE STRUCTURE AND TO ADJACENT CURTAIN WALL MULLION "F".
SHEET 36: DOOR JAMBS CONNECTION TO CURTAIN WALL.

INSTRUCTIONS:

STEP 1: DETERMINE A.S.D. DESIGN WIND LOAD REQUIREMENTS BASED ON WIND VELOCITY, BUILDING HEIGHT, WIND ZONE, USING APPLICABLE ASCE 7 STANDARDS.

STEP 2: GO TO SCHEDULE ON SHEET 8 TO DETERMINE MAXIMUM A.S.D. DESIGN PRESSURE RATING "W" (psf) OF DESIRED GLASS SIZE BASED ON GLASS PANEL DIMENSIONS.

STEP 3: DETERMINE MAXIMUM MULLION AND JAMB SPAN "L"(FT) FOR A GIVEN MULLION EFFECTIVE SPACING "b", FOR SINGLE AND TWIN SPANS ON SCHEDULES ON SHEETS 9, 10 AND 22A.

STEP 4: USING SCHEDULES ON SHEETS 12, 13 AND 14 THRU 17 SELECT ANCHOR OPTION FOR MULLIONS AND JAMBS WITH A.S.D. DESIGN PRESSURE RATING EQUAL OR GREATER THAN A.S.D. DESIGN LOAD SPECIFIED IN STEP 1.

STEP 5: USING SCHEDULE ON SHEET 19, VERIFY MAXIMUM A.S.D. DESIGN PRESSURE RATING OF HORIZONTALS (IF USED) AND HORIZONTAL EXPANSION.

STEP 6: THE LOWEST VALUE OF A.S.D. DESIGN PRESSURE RATING RESULTING FROM STEPS 2, 3, 4 AND 5 SHALL APPLY TO THE ENTIRE SYSTEM.

FLORIDA BUILDING CODE (High Velocity Hurricane Zone)

F.P./M.C.V./A.G. DRAWN BY
11/17/11 DATE
11-123 DRAWING No
SHEET 1 OF 36

HR-251 CAPTURED CURTAIN WALL SYSTEM
LARGE MISSILE IMPACT INSULATED GLASS

Oldcastle BuildingEnvelope™
803 Airport Rd - Terrell, TX 75160
www.OldcastleBE.com - Phone 800-869-4567

REV. No.	DESCRIPTION	DATE	REV. No.	DESCRIPTION	DATE
1	Sub 11-022	11/17/11	3	-	-
2	-	-	4	-	-

©2011 TILLECO, INC

TILLECO INC.
TILLIT TESTING & ENGINEERING COMPANY
5555 N.W. 36th. St., Ste. 305, VIRGINIA GARDENS, FLORIDA 33166
Phone : (305)871-1534 - Fax : (305)871-1531
e-mail: tilleco@bellsouth.net
EB-0006719
WALTER A. TILLIT Jr., P.E.
FLORIDA Lic. # 44167

WALTER A. TILLIT JR. LICENSE No. 44167 STATE OF FLORIDA PROFESSIONAL ENGINEER
P.E. SEAL/SIGNATURE/DATE

PRODUCT REVISED as complying with the Florida Building Code
Acceptance No 11-1209.08
Expiration Date DEC 9 2014
By Miami-Dade Product Control

MIAMI-DADE COUNTY

HR-251 IMPACT RESISTANT CAPTURED CURTAIN WALL SYSTEM COMPONENTS

SCALE : 1/4" = 1" (EXCEPT AS NOTED)

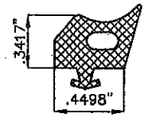

① EXTERIOR GLAZING GASKET
GP-118
SCALE : 1" = 1"

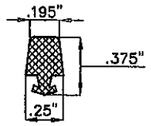

② INTERIOR SPACER GASKET
FG-5185
SCALE : 1" = 1"

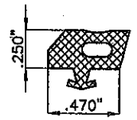

④ EXTERIOR PERIMETER GASKET
GP-103
SCALE : 1" = 1"

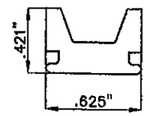

⑤ THERMAL ISOLATOR
CW-6H
SCALE : 1" = 1"

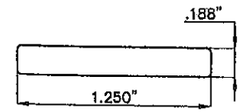

⑥ SETTING BLOCK
CW-2102
SCALE : 1" = 1"

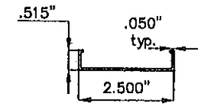

⑪ 2 1/2" FACE CAP
CW-2

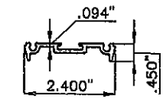

⑫ 2 1/2" PRESSURE BAR
ZG-60

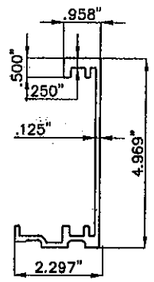

⑬ JAMB HEAD
ANCHOR SLEEVE
HR-FP-16

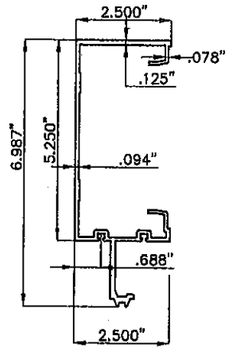

⑭ MULLION
CW-2023

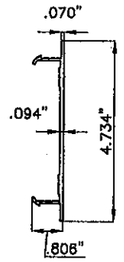

⑮ MULLION FILLER
CW-1996

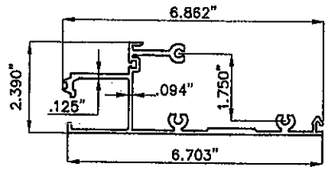

⑯ HEAD/SILL
CW-2024

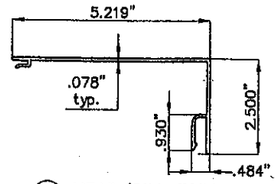

⑰ HEAD/SILL TRIM
CW-1998

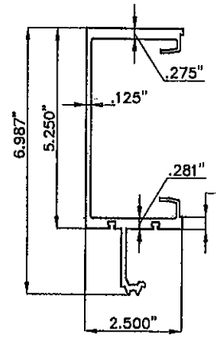

⑱ HEAVY MULLION
CW-2182

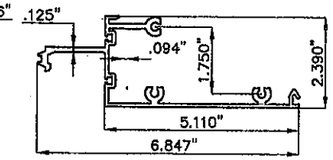

⑲ OPEN BACK HORIZONTAL
CW-2156

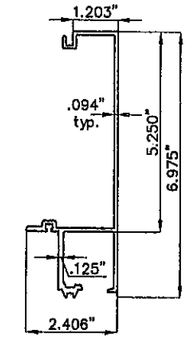

⑳ TWO PIECE JAMB
FEMALE HALF
CW-2026

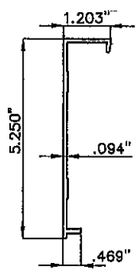

㉑ TWO PIECE JAMB
MALE HALF
CW-2002

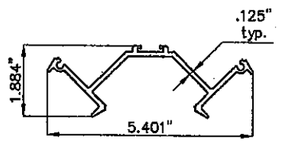

㉒ CORNER PRESSURE PLATE
CW-2183

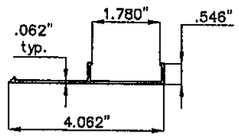

㉓ CORNER FACE CAP
CW-2188

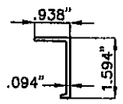

㉔ POCKET FILLER
CW-691

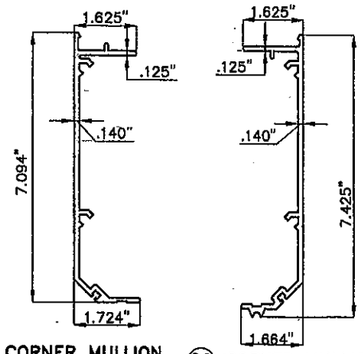

㉕ CORNER MULLION
FEMALE HALF
CW-2018

㉖ CORNER MULLION
MALE HALF
CW-2019

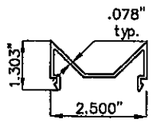

㉗ MULLION FILLER
CW-2020

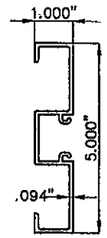

㉘ DOOR JAMB
D-226

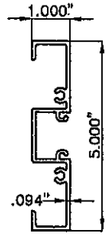

㉘A SUB-FRAME HEADER
D-231

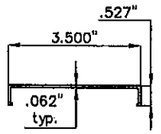

㉙ 3-1/2" FACE CAP
CW-709

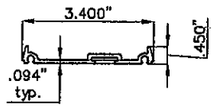

㉚ 3-1/2" PRESSURE PLATE
CW-2722

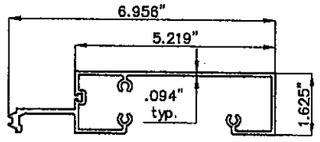

㉛ EXPANSION HORIZONTAL TOP
CW-2720

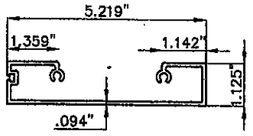

㉜ EXPANSION HORIZONTAL BOTTOM
CW-2721

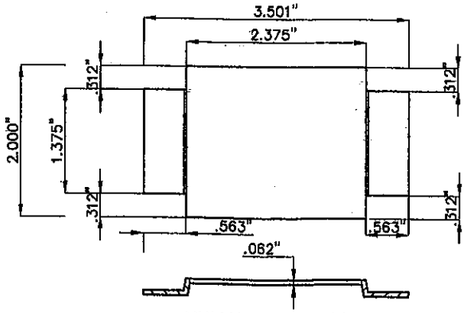

㉝ MULLION END CAP
HR-FP-4
SCALE : 1/2" = 1"

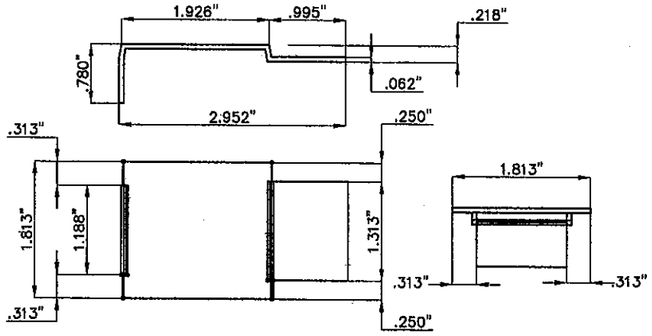

㉞ LEFT & RIGHT JAMB
END CAP HR-FP-5
SCALE : 1/2" = 1"

FLORIDA BUILDING CODE (High Velocity Hurricane Zone)

©2011 TILTECO, INC

TILTECO INC.
TILLIT TESTING & ENGINEERING COMPANY
6355 N.W. 36th. St., Ste. 305, VIRGINIA GARDENS, FLORIDA 33166
Phone : (305)871-1530 Fax : (305)871-1531
e-mail: tilteco@aol.com
EB-0006719
WALTER A. TILLIT Jr., P.E.
FLORIDA Lic. # 44167

F.P./M.C.V./A.G.
DRAWN BY

11/17/11
DATE

11-123
DRAWING No

SHEET 2 OF 36

HR-251 CAPTURED CURTAIN WALL SYSTEM
LARGE MISSILE IMPACT INSULATED GLASS

Oldcastle BuildingEnvelope™
803 Airport Rd - Terrell, TX 75160
www.OldcastleBE.com - Phone 800-869-4567

REV. No	DESCRIPTION	DATE	REV. No	DATE	DESCRIPTION	DATE
1	OLD 11-002	11/17/11	3		-	-
2			4		-	-

11/23/11

P.E. SEAL/SIGNATURE/DATE

PRODUCT REVISED
as complying with the Florida
Building Code
Acceptance No 11-1206.03
Expiration Date DEC. 7, 2014
By
Miami-Dade Product Control

MIAMI-DADE COUNTY

HR-251 IMPACT RESISTANT CAPTURED CURTAIN WALL SYSTEM COMPONENTS (CONTINUED)

SCALE : 1/4" = 1" (EXCEPT AS NOTED)

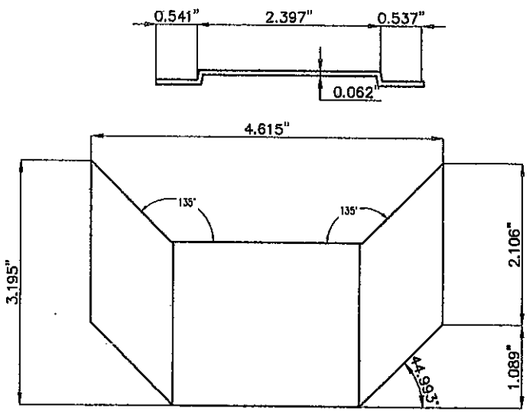

(36) 90 DEG. MULLION END CAP
HR-FP-8
SCALE : 1/2" = 1"

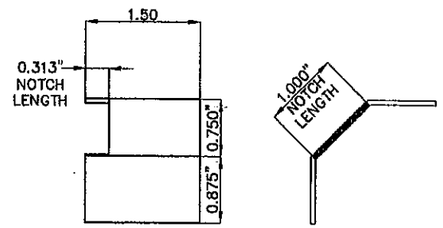

(37) WATER DIVERTER
HR-FP-12

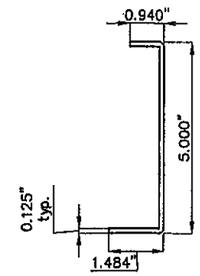

(39) WALL JAMB SPLICE
FEMALE HALF
HR-FP-14

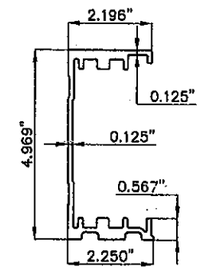

(40) HEAD ANCHOR SLEEVE
HR-FP-15

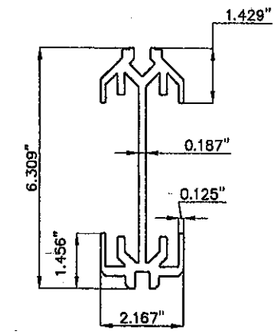

(41) HEAD ANCHOR SLEEVE
CORNER HR-FP-17

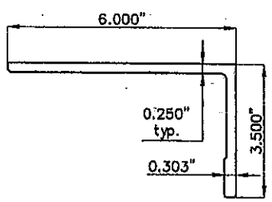

(42) HEAD ANCHOR LEFT
HR-FP-24

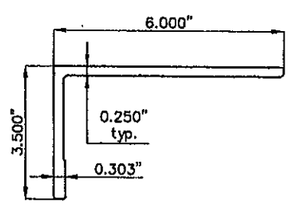

(42A) HEAD ANCHOR RIGHT
HR-FP-25

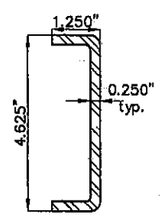

(50) STEEL REINFORCING
FG5000-PP-8

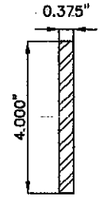

(51) STEEL REINFORCING
RS-16

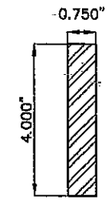

(52) STEEL REINFORCING
RS-17

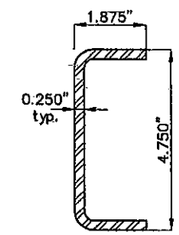

(53) STEEL REINFORCING
RS-25

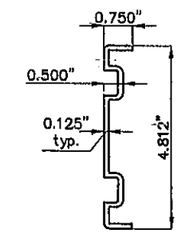

(55) WALL JAMB SPLICE
MALE HALF
HR-FP-18

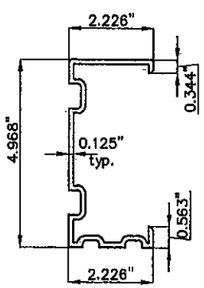

(63) MULLION SPLICE
HR-FP-20

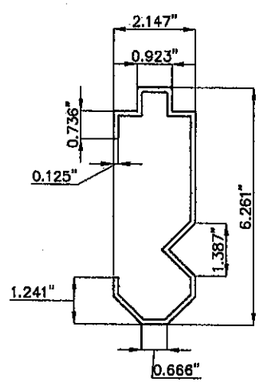

(64) CORNER SPLICE
HR-FP-21

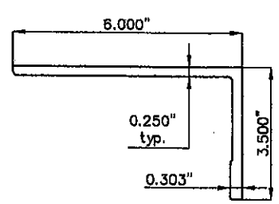

(65) HEAD ANCHOR
CORNER LEFT
HR-FP-22

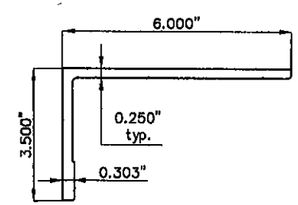

(66) HEAD ANCHOR
CORNER RIGHT
HR-FP-23

FLORIDA BUILDING CODE (High Velocity Hurricane Zone)

F.P./M.C.Y./A.G. DRAWN BY

11/17/11 DATE

11-123 DRAWING No

SHEET 3 OF 36

HR-251 CAPTURED CURTAIN WALL SYSTEM
LARGE MISSILE IMPACT INSULATED GLASS

Oldcastle BuildingEnvelope™
803 Airport Rd - Terrell, TX 75160
www.OldcastleBE.com - Phone 800-869-4567

REV. No	DESCRIPTION	DATE	REV. No	DESCRIPTION	DATE
1	OLD 11-002	11/17/11	3	-	-
2			4	-	-

©2011 TILTECO, INC.

TILTECO INC.
TILLIT TESTING & ENGINEERING COMPANY
6355 N.W. 36th. St. Ste. 305, VIRGINIA GARDENS, FLORIDA 33166
Phone : (305)871-1530 . Fax : (305)871-1531
e-mail: tilteco@aol.com
EB-0006719
WALTER A. TILLIT Jr., P.E.
FLORIDA Lic. # 44167

P.E. SEAL/SIGNATURE/DATE

PRODUCT REVISED
as complying with the Florida
Building Code
Acceptance No 11-1206.08
Expiration Date DEC. 7, 2014
By Miami-Dade Product Control

MIAMI-DADE COUNTY

BILL OF MATERIALS

ITEM No.	PART NUMBER	DESCRIPTION	DIMENSIONS	MATERIAL	MANUFACTURER	NOTES
1.	GP-118	EXTERIOR GLAZING GASKET	.342" X .450"	VINYL	EPG	70 DUROMETER
2.	FG-5185	INTERIOR SPACER GASKET	.25" X .375"	VINYL	EPG	
3.	DOW 995	STRUCTURAL SILICONE	FILL SPACE (.25" x .56") TYP. MULL (.25" X .625") @CORNER	SILICONE	DOW CORNING	
4.	GP-103	EXTERIOR PERIMETER GASKET	.250" X .470"	VINYL	EPG	
5.	CW-6H	THERMAL ISOLATOR	.625" X .421"	RIGID VINYL	OLDCASTLE BUILDINGENVELOPE	
6.	CW-2102	SETTING BLOCK	1.250" X .188" X 4" LONG	EPDM	EPG	
7.	795	PERIMETER SEALANT	FILL SPACE	SILICONE	DOW CORNING	
8.	FS-8	ASSEMBLY SCREW	#14 X 1" HHSTS FS-322 (STALGARD COATED BY ELCO)	STEEL	ELCO	
9.	FS-7	ASSEMBLY SCREW	#10 X 3/4" PFH TYPE B	STEEL	VARIES	(2)@ EA. HORIZ. 12" O.C.@ 2PC JAMB
10.	FS-322	PRESSURE PLATE SCREW	#12-14 X 1" HWH #3 FS-322 (STALGARD COATED BY ELCO)	STEEL	ELCO	(1) @ EA. 24" O.C.
11.	CW-2	FACE CAP	.515" X 2.5" X .050"	6063-T6 ALUMINUM	OLDCASTLE BUILDINGENVELOPE	
12.	ZG-60	2 1/2" PRESSURE BAR	2.40" X .450" X .094"	6063-T6 ALUMINUM	OLDCASTLE BUILDINGENVELOPE	SEE NOTE: #1
13.	HR-FP-16	JAMB HEAD ANCHOR SLEEVE	2 3/16" X 5 5/16" X 5 1/8" LONG	6063-T6 ALUMINUM	OLDCASTLE BUILDINGENVELOPE	USED @ JAMBS
14.	CW-2023	MULLION	2.50" X 6.987" X .094"	6063-T6 ALUMINUM	OLDCASTLE BUILDINGENVELOPE	
15.	CW-1996	MULLION FILLER	.804" X 4.734" X .070"	6063-T6 ALUMINUM	OLDCASTLE BUILDINGENVELOPE	
16.	CW-2024	HEAD/SILL	2.39" X 6.862" X .094"	6063-T6 ALUMINUM	OLDCASTLE BUILDINGENVELOPE	
17.	CW-1998	HEAD/SILL TRIM	2.50" X 5.219" X .078"	6063-T6 ALUMINUM	OLDCASTLE BUILDINGENVELOPE	
18.	CW-2182	HEAVY MULLION	2.50" X 6.987" X .094"	6063-T6 ALUMINUM	OLDCASTLE BUILDINGENVELOPE	
19.	CW-2156	HORIZONTAL	2.39" X 6.847" X .094"	6063-T6 ALUMINUM	OLDCASTLE BUILDINGENVELOPE	
20.	CW-2026	TWO PIECE JAMB FEMALE HALF	2.40" X 6.975" X .094"	6063-T6 ALUMINUM	OLDCASTLE BUILDINGENVELOPE	
21.	CW-2002	TWO PIECE JAMB MALE HALF	1.203" X 5.25" X .094"	6063-T6 ALUMINUM	OLDCASTLE BUILDINGENVELOPE	
22.	CW-2183	CORNER PRESSURE PLATE	1.884" X 5.401" X .125"	6063-T6 ALUMINUM	OLDCASTLE BUILDINGENVELOPE	
23.	CW-2188	CORNER FACE CAP	.546" X 4.062" X .062"	6063-T5 ALUMINUM	OLDCASTLE BUILDINGENVELOPE	
24.	CW-691	POCKET FILLER	.938" X 1.594" X .094"	6063-T5 ALUMINUM	OLDCASTLE BUILDINGENVELOPE	
25.	CW-2018	CORNER MULLION FEMALE HALF	1.724" X 7.094" X .140"	6063-T6 ALUMINUM	OLDCASTLE BUILDINGENVELOPE	
26.	CW-2019	CORNER MULLION MALE HALF	1.724" X 7.094" X .140"	6063-T6 ALUMINUM	OLDCASTLE BUILDINGENVELOPE	
27.	CW-2020	CORNER MULLION FILLER	1.302" X 2.50" X .078"	6063-T5 ALUMINUM	OLDCASTLE BUILDINGENVELOPE	
28.	D-226	DOOR JAMB	1.00" X 5.00" X .094"	6063-T6 ALUMINUM	OLDCASTLE BUILDINGENVELOPE	
28A.	D-231	SUB-FRAME HEADER	1.00" X 5.00" X .094"	6063-T6 ALUMINUM	OLDCASTLE BUILDINGENVELOPE	
29.	CW-709	3-1/2" FACE CAP	3.50" X .527" X .062"	6063-T6 ALUMINUM	OLDCASTLE BUILDINGENVELOPE	
30.	CW-2722	3-1/2" PRESSURE PLATE	3.40" X .450" X .094"	6063-T6 ALUMINUM	OLDCASTLE BUILDINGENVELOPE	
31.	CW-2720	EXPANSION HORIZONTAL TOP HALF	1.625" X 6.957" X .094"	6063-T6 ALUMINUM	OLDCASTLE BUILDINGENVELOPE	
32.	CW-2721	EXPANSION HORIZONTAL BOTTOM HALF	1.125" X 5.219" X .094"	6063-T6 ALUMINUM	OLDCASTLE BUILDINGENVELOPE	

NOTE #1: ALL VERTICALS PRESSURE PLATES SHALL BE CUT ¼" SHORT IN LENGTH TO ALLOW FOR WEEP SLOT

FLORIDA BUILDING CODE (High Velocity Hurricane Zone)

F.P./M.C.V./A.G. DRAWN BY

11/17/11 DATE

11-123 DRAWING No

SHEET 4 OF 36

HR-251 CAPTURED CURTAIN WALL SYSTEM
LARGE MISSILE IMPACT INSULATED GLASS

Oldcastle BuildingEnvelope™
803 Airport Rd - Terrell, TX 75160
www.OldcastleBE.com - Phone 800-889-4567

REV. No	DESCRIPTION	DATE	REV. No	DESCRIPTION	DATE
1	OLD 11-502	11/7/11	3	-	-
2			4	-	-

©2011 TILTECO, INC

TILTECO INC.
TILLIT TESTING & ENGINEERING COMPANY
6355 N.W. 36th. St. Ste. 305, VIRGINIA GARDENS, FLORIDA 33166
Phone : (305)871-1530 . Fax : (305)871-1531
e-mail: tilteco@aol.com
EB-0006719
WALTER A. TILLIT Jr., P.E.
FLORIDA Lic. # 44167

11/2/11

P.E. SEAL/SIGNATURE/DATE

PRODUCT REVISED
as complying with the Florida
Building Code
Acceptance No 11-1206.03
Expiration Date DEC. 9, 2014
By
Miami Dade Product Control

MIAMI-DADE COUNTY

BILL OF MATERIALS (CONTINUED)

ITEM No.	PART NUMBER	DESCRIPTION	DIMENSIONS	MATERIAL	MANUFACTURER	NOTES
33.	HR-FP-4	MULLION END CAPS/WATER DIVERTER	3.5 X 2.00 X .062	RIGID VINYL	OLDCASTLE BUILDINGENVELOPE	SEE NOTE # 2 BELOW
34.	HR-FP-5	LEFT AND RIGHT JAMB END CAPS/WATER DIVERTER	2.96 X 0.78 X .062	RIGID VINYL	OLDCASTLE BUILDINGENVELOPE	SEE NOTE # 2 BELOW
36.	HR-FP-8	90 DEG MULLION END CAP	4.615 X 3.195 X .062	RIGID VINYL	OLDCASTLE BUILDINGENVELOPE	TOP & BOTTOM OF MULLION SEE NOTE # 2 BELOW
37.	HR-FP-12	WATER DIVERTER	1.50 X 1.00 X .062	RIGID VINYL	OLDCASTLE BUILDINGENVELOPE	1.50 LONG SEE NOTE # 2 BELOW
39.	HR-FP-14	TWO PART WALL JAMB SPLICE FEMALE HALF	5.00 X 1.484 X .125 X 6" LONG	6063-T6 ALUMINUM	OLDCASTLE BUILDINGENVELOPE	AT (2) PART JAMB CASE: (20) + (21)
40.	HR-FP-15	HEAD ANCHOR SLEEVE	2 3/16" X 4 15/16" X X 2 1/2" LONG	6063-T6 ALUMINUM	OLDCASTLE BUILDINGENVELOPE	
41.	HR-FP-17	HEAD ANCHOR SLEEVE CORNER	2 3/16" X 6 3/16" X 3" LONG	6063-T6 ALUMINUM	OLDCASTLE BUILDINGENVELOPE	USED @ JAMBS
42.	HR-FP-24	HEAD ANCHOR LEFT	3 1/2" x 6" x 4 1/4" LONG	6063-T6 ALUMINUM	OLDCASTLE BUILDINGENVELOPE	
42A.	HR-FP-25	HEAD ANCHOR RIGHT	3 1/2" x 6" x 4 1/4" LONG	6063-T6 ALUMINUM	OLDCASTLE BUILDINGENVELOPE	
43.	FASTENER	ANCHOR BOLT	5/8"-11 X 4 1/2" SAE GRD 5 BOLT, HEX NUT AND WASHER	STEEL	VARIES	ZINC COATED, PER ASTM B-633
44.	**	STEEL DEADLOAD ANCHOR	4" X 6" X 5/16" X 5" LONG	A36 STEEL	VARIES	ZINC COATED, PER ASTM B-633.
45.	**	SLIP PAD	4" X 4" X .063	VINYL	KORALATH	USED @ MID POINT ANCHORS
46.	FASTENER	PERIMETER ANCHOR	3/8"-13 X 2" TYP F BOLT	STEEL	VARIES	ZINC COATED, PER ASTM B-633.
47.	**	STEEL DEADLOAD ANCHOR @ CORNER	4" X 8" X 1/4" X 5" LONG	A36 STEEL	VARIES	
48.	FASTENER	STEEL REINFORCING ATTACHMENT BOLT	1/4"-20 X 2" BOLT WITH WASHER AND NUT	STEEL	VARIES	ZINC COATED, PER ASTM B-633
49.	SM-5601	JOINT SEALANT TAPE	.125" X .750" X VARIES	BUTYL	SCHNEE-MOREHEAD	
50.	FG5000-PP-8	REINFORCING STEEL	4 5/8" X 1 1/4" X 1/4" CHANNEL	A36 STEEL	VARIES	USED @ VERT. CORNER MULLION, COAT ZINC RICH PRIMER
51.	RS-16	STEEL REINFORCING INCLUDES RS-25	3/8" X 4" STEEL BAR RS-25 WELDED EVERY 18" WITH 2"X 3/32" WELDS	A36 STEEL	VARIES	USED @ VERT. MULLION COAT ZINC RICH PRIMER, 76" LONG
52.	RS-17	STEEL REINFORCING INCLUDES RS-25	3/4" X 4" STL. BAR WITH RS-25	A36 STEEL	VARIES	
53.	RS-25	REINFORCING STEEL	4 3/4" X 1 7/8" X 1/4" CHANNEL	A36 STEEL	VARIES	COAT ZINC RICH PRIMER
54.	FASTENER	STEEL REINFORCING ATTACHMENT BOLT	1/4"-20 X 1 1/2" SAE GRADE 5 BOLT WITH WASHER AND NUT	STEEL	VARIES	THROUGH-BOLT @ INT HORIZONTALS
55.	HR-FP-18	TWO PART WALL JAMB SPLICE MALE HALF	.75" X 4.812" X .125"	6063-T6 ALUMINUM	OLDCASTLE BUILDINGENVELOPE	AT (2) PART JAMB CASE
59.	FASTENER	ATTACHMENT BOLT	1/4"-20 X 2 1/4" BOLT WITH WASHER AND NUT	STEEL	VARIES	
60.	FASTENER	ATTACHMENT BOLT	1/4"-20 X 3" SAE GRADE 5 BOLT WITH WASHER AND NUT	STEEL	VARIES	THROUGH-BOLT @ INT HORIZONTALS
63.	HR-FP-20	MULLION AND STANDARD JAMB SPLICE	2.16" X 4.96" X .125"X 6" LONG	6063-T6 ALUMINUM	OLDCASTLE BUILDINGENVELOPE	
64.	HR-FP-21	CORNER MULLION SPLICE	2.147" X 6.314" X .125"	6063-T6 ALUMINUM	OLDCASTLE BUILDINGENVELOPE	
65.	HR-FP-22	CORNER HEAD ANCHOR LEFT	2.147" X 6.314" X .25"	6063-T6 ALUMINUM	OLDCASTLE BUILDINGENVELOPE	
66.	HR-FP-23	CORNER HEAD ANCHOR RIGHT	2.147" X 6.314" X .25"	6063-T6 ALUMINUM	OLDCASTLE BUILDINGENVELOPE	

** NO PART NUMBER ASSIGNED
NOTE #2-BEAD OF DOW CORNING 995 SILICONE SHALL BE APPLIED TO FRAME SURFACE BEFORE PART IS INSTALLED

FLORIDA BUILDING CODE (High Velocity Hurricane Zone)

F.P./M.C.V./A.G. DRAWN BY
11/17/11 DATE
11-123 DRAWING No
SHEET 5 OF 36

HR-251 CAPTURED CURTAIN WALL SYSTEM
LARGE MISSILE IMPACT INSULATED GLASS

Oldcastle BuildingEnvelope™
803 Airport Rd - Terrell, TX 75160
www.OldcastleBE.com - Phone 800-869-4567

REV. No.	DESCRIPTION	DATE	REV. No.	DESCRIPTION	DATE
1	OLD 11-502	11/7/11	3	-	-
2			4	-	-

©2011 TILTECO, INC

TILTECO INC.
TILLIT TESTING & ENGINEERING COMPANY
6355 N.W. 36th. St., Ste. 305, VIRGINIA GARDENS, FLORIDA 33166
Phone : (305)871-1530 Fax : (305)871-1531
e-mail: tilteco@aol.com
EB-0006719
WALTER A. TILLIT Jr., P.E.
FLORIDA Lic. # 44167

11/23/11
P.E. SEAL/SIGNATURE/DATE

PRODUCT REVISED
as complying with the Florida Building Code
Acceptance No 11-1206.08
Expiration Date DEC 7 2014
By Miami-Dade Product Control

MIAMI-DADE COUNTY

HR-251 IMPACT RESISTANT CAPTURED CURTAIN WALL SYSTEM COMPONENTS

SCALE : 1/4" = 1" (EXCEPT AS NOTED)

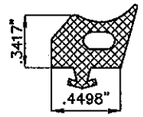

① EXTERIOR GLAZING GASKET GP-118
SCALE : 1" = 1"

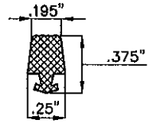

② INTERIOR SPACER GASKET FG-5185
SCALE : 1" = 1"

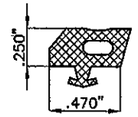

④ EXTERIOR PERIMETER GASKET GP-103
SCALE : 1" = 1"

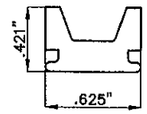

⑤ THERMAL ISOLATOR CW-6H
SCALE : 1" = 1"

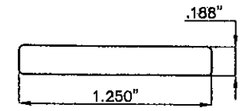

⑥ SETTING BLOCK CW-2102
SCALE : 1" = 1"

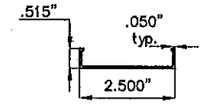

⑪ 2 1/2" FACE CAP CW-2

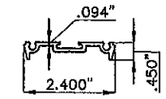

⑫ 2 1/2" PRESSURE BAR ZG-60

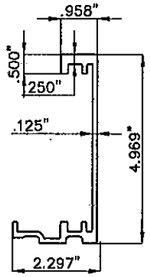

⑬ JAMB HEAD ANCHOR SLEEVE HR-FP-16

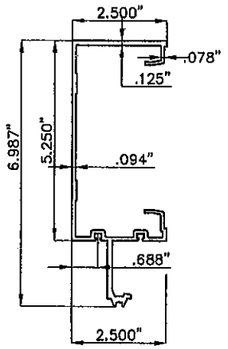

⑭ MULLION CW-2023

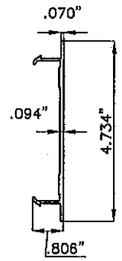

⑮ MULLION FILLER CW-1996

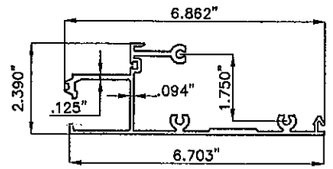

⑯ HEAD/SILL CW-2024

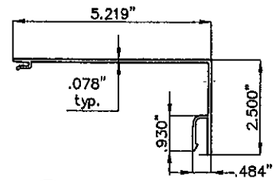

⑰ HEAD/SILL TRIM CW-1998

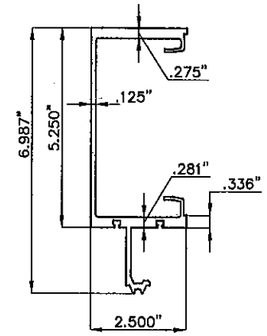

⑱ HEAVY MULLION CW-2182

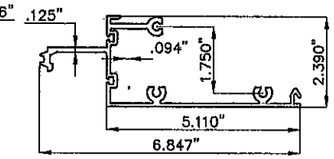

⑲ OPEN BACK HORIZONTAL CW-2156

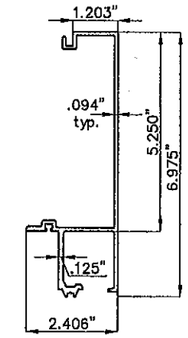

⑳ TWO PIECE JAMB FEMALE HALF CW-2026

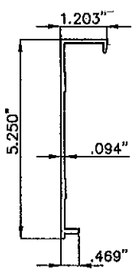

㉑ TWO PIECE JAMB MALE HALF CW-2002

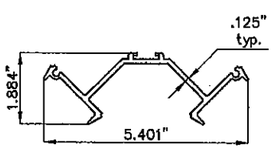

㉒ CORNER PRESSURE PLATE CW-2183

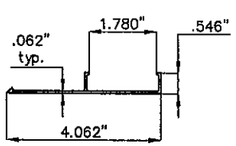

㉓ CORNER FACE CAP CW-2188

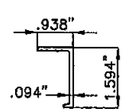

㉔ POCKET FILLER CW-691

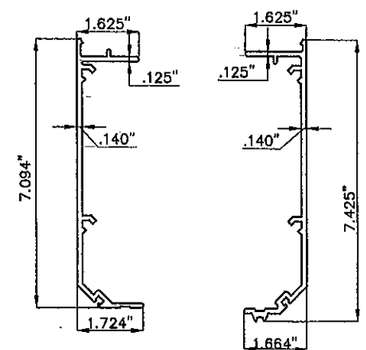

㉕ CORNER MULLION FEMALE HALF CW-2018

㉖ CORNER MULLION MALE HALF CW-2019

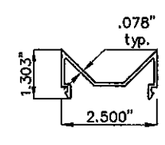

㉗ MULLION FILLER CW-2020

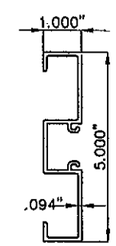

㉘ DOOR JAMB D-226

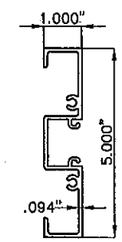

㉘A SUB-FRAME HEADER D-231

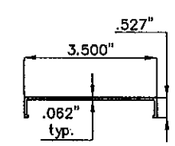

㉙ 3-1/2" FACE CAP CW-709

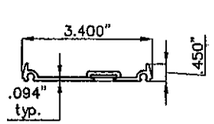

㉚ 3-1/2" PRESSURE PLATE CW-2722

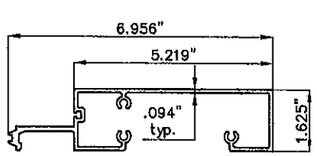

㉛ EXPANSION HORIZONTAL TOP CW-2720

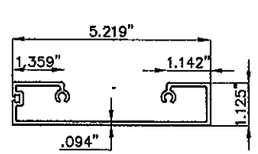

㉜ EXPANSION HORIZONTAL BOTTOM CW-2721

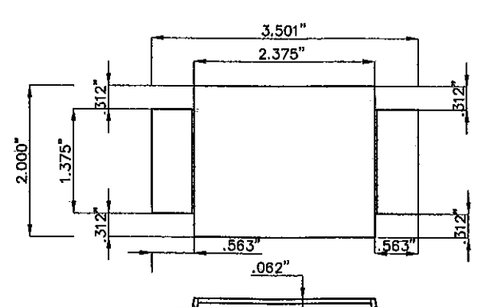

㉝ MULLION END CAP HR-FP-4
SCALE : 1/2" = 1"

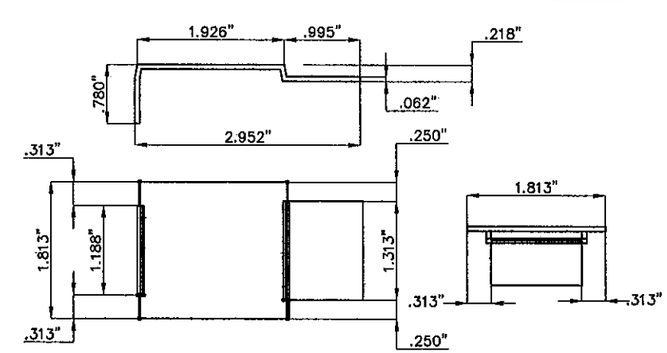

㉞ LEFT & RIGHT JAMB END CAP HR-FP-5
SCALE : 1/2" = 1"

FLORIDA BUILDING CODE (High Velocity Hurricane Zone)

F.P./M.C.V./A.G. DRAWN BY

11/17/11 DATE

11-123 DRAWING No

SHEET 2 OF 36

HR-251 CAPTURED CURTAIN WALL SYSTEM
LARGE MISSILE IMPACT INSULATED GLASS

Oldcastle BuildingEnvelope™
803 Airport Rd - Terrell, TX 75160
www.OldcastleBE.com - Phone 800-869-4567

REV. No	DESCRIPTION	DATE
1	OLD 11-092	11/17/11
2		
3	-	-
4	-	-

©2011 TILTECO, INC

TILTECO INC.
TILLIT TESTING & ENGINEERING COMPANY
6355 N.W. 36th. St., Ste. 305, VIRGINIA GARDENS, FLORIDA 33166
Phone : (305)871-1530 , Fax : (305)871-1531
e-mail: tilteco@aol.com
EB-0006719
WALTER A. TILLIT Jr., P.E.
FLORIDA Lic. # 44167

WALTER A. TILLIT JR. LICENSE No. 44167 STATE OF FLORIDA PROFESSIONAL ENGINEER

11/17/11

P.E. SEAL/SIGNATURE/DATE

PRODUCT REVISED
as complying with the Florida Building Code
Acceptance No 11-1204.03
Expiration Date Dec. 4, 2012
By Miami-Dade Product Control

MIAMI-DADE COUNTY

HR-251 IMPACT RESISTANT CAPTURED CURTAIN WALL SYSTEM COMPONENTS (CONTINUED)

SCALE : 1/4" = 1" (EXCEPT AS NOTED)

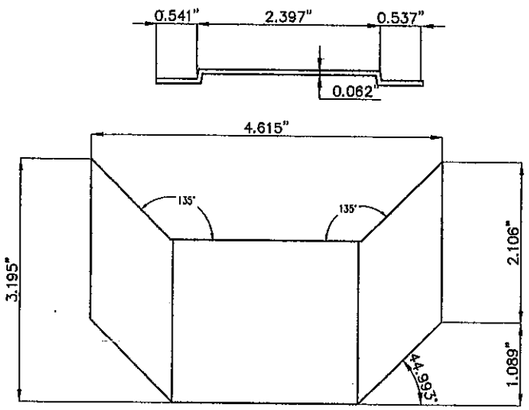

(36) 90 DEG. MULLION END CAP
HR-FP-8
SCALE : 1/2" = 1"

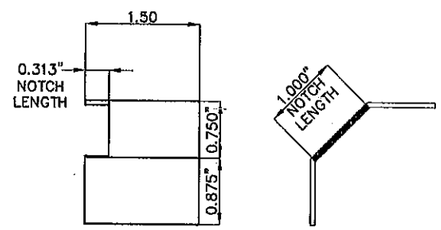

(37) WATER DIVERTER
HR-FP-12

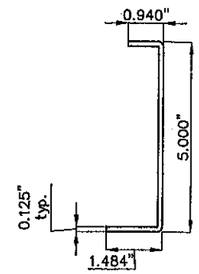

(39) WALL JAMB SPLICE
FEMALE HALF
HR-FP-14

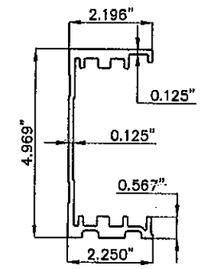

(40) HEAD ANCHOR SLEEVE
HR-FP-15

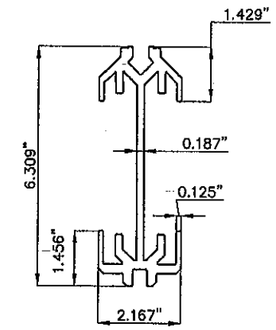

(41) HEAD ANCHOR SLEEVE
CORNER HR-FP-17

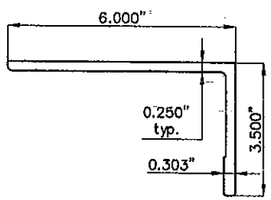

(42) HEAD ANCHOR LEFT
HR-FP-24

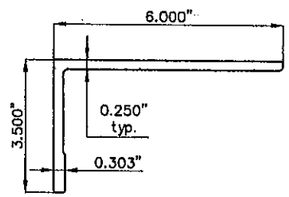

(42A) HEAD ANCHOR RIGHT
HR-FP-25

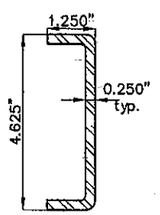

(50) STEEL REINFORCING
FG5000-PP-8

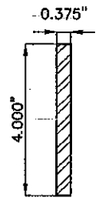

(51) STEEL REINFORCING
RS-16

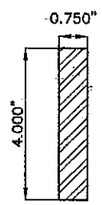

(52) STEEL REINFORCING
RS-17

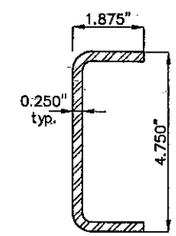

(53) STEEL REINFORCING
RS-25

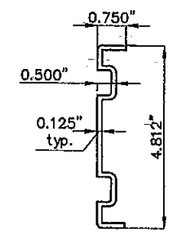

(55) WALL JAMB SPLICE
MALE HALF
HR-FP-18

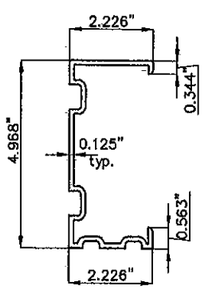

(63) MULLION SPLICE
HR-FP-20

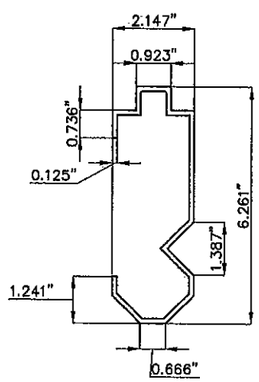

(64) CORNER SPLICE
HR-FP-21

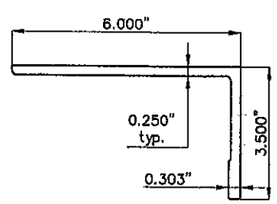

(65) HEAD ANCHOR
CORNER LEFT
HR-FP-22

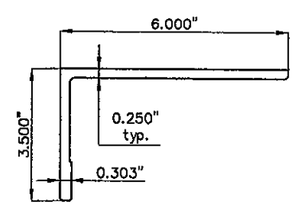

(66) HEAD ANCHOR
CORNER RIGHT
HR-FP-23

FLORIDA BUILDING CODE (High Velocity Hurricane Zone)

F.P./M.C.V./A.G. DRAWN BY

11/17/11 DATE

11-123 DRAWING No

SHEET 3 OF 36

HR-251 CAPTURED CURTAIN WALL SYSTEM
LARGE MISSILE IMPACT INSULATED GLASS

Oldcastle BuildingEnvelope™
803 Airport Rd - Terrell, TX 75160
www.OldcastleBE.com - Phone 800-869-4567

REV. No	DESCRIPTION	DATE
1	OLD 11-002	11/17/11
2		
3	-	-
4	-	-

©2011 TILTECO, INC

TILTECO INC.
TILLIT TESTING & ENGINEERING COMPANY
6355 N.W. 36th. St., Ste. 305, VIRGINA GARDENS, FLORIDA 33166
Phone : (305)871-1530 Fax : (305)871-1531
e-mail: tilteco@aol.com
EB-0006719
WALTER A. TILLIT Jr., P.E.
FLORIDA Lic. # 44167

WALTER A. TILLIT JR. LICENSE No. 44167 STATE OF FLORIDA PROFESSIONAL ENGINEER

11/17/11

P.E. SEAL/SIGNATURE/DATE

PRODUCT REVISED
as complying with the Florida
Building Code
Acceptance No. 11-1206.08
Expiration Date DEC 9, 2014
By Miami-Dade Product Control

MIAMI-DADE COUNTY

BILL OF MATERIALS

ITEM No.	PART NUMBER	DESCRIPTION	DIMENSIONS	MATERIAL	MANUFACTURER	NOTES
1.	GP-118	EXTERIOR GLAZING GASKET	.342" X .450"	VINYL	EPG	70 DUROMETER
2.	FG-5185	INTERIOR SPACER GASKET	.25" X .375"	VINYL	EPG	
3.	DOW 995	STRUCTURAL SILICONE	FILL SPACE (.25" x .56") TYP. MULL (.25" X .625") @CORNER	SILICONE	DOW CORNING	
4.	GP-103	EXTERIOR PERIMETER GASKET	.250" X .470"	VINYL	EPG	
5.	CW-6H	THERMAL ISOLATOR	.625" X .421"	RIGID VINYL	OLDCASTLE BUILDINGENVELOPE	
6.	CW-2102	SETTING BLOCK	1.250" X .188" X 4" LONG	EPDM	EPG	
7.	795	PERIMETER SEALANT	FILL SPACE	SILICONE	DOW CORNING	
8.	FS-8	ASSEMBLY SCREW	#14 X 1" HHSTS FS-322 (STALGARD COATED BY ELCO)	STEEL	ELCO	
9.	FS-7	ASSEMBLY SCREW	#10 X 3/4" PFH TYPE B	STEEL	VARIES	(2)@ EA. HORIZ, 12" O.C.@ 2PC JAMB
10.	FS-322	PRESSURE PLATE SCREW	#12-14 X 1" HWH #3 FS-322 (STALGARD COATED BY ELCO)	STEEL	ELCO	(1) @ EA. 24" O.C.
11.	CW-2	FACE CAP	.515" X 2.5" X .050"	6063-T6 ALUMINUM	OLDCASTLE BUILDINGENVELOPE	
12.	ZG-60	2 1/2" PRESSURE BAR	2.40" X .450" X .094"	6063-T6 ALUMINUM	OLDCASTLE BUILDINGENVELOPE	SEE NOTE: #1
13.	HR-FP-16	JAMB HEAD ANCHOR SLEEVE	2 3/16" X 5 5/16" X 5 1/8" LONG	6063-T6 ALUMINUM	OLDCASTLE BUILDINGENVELOPE	USED @ JAMBS
14.	CW-2023	MULLION	2.50" X 6.987" X .094"	6063-T6 ALUMINUM	OLDCASTLE BUILDINGENVELOPE	
15.	CW-1996	MULLION FILLER	.804" X 4.734" X .070"	6063-T6 ALUMINUM	OLDCASTLE BUILDINGENVELOPE	
16.	CW-2024	HEAD/SILL	2.39" X 6.862" X .094"	6063-T6 ALUMINUM	OLDCASTLE BUILDINGENVELOPE	
17.	CW-1998	HEAD/SILL TRIM	2.50" X 5.219" X .078"	6063-T6 ALUMINUM	OLDCASTLE BUILDINGENVELOPE	
18.	CW-2182	HEAVY MULLION	2.50" X 6.987" X .094"	6063-T6 ALUMINUM	OLDCASTLE BUILDINGENVELOPE	
19.	CW-2156	HORIZONTAL	2.39" X 6.847" X .094"	6063-T6 ALUMINUM	OLDCASTLE BUILDINGENVELOPE	
20.	CW-2026	TWO PIECE JAMB FEMALE HALF	2.40" X 6.975" X .094"	6063-T6 ALUMINUM	OLDCASTLE BUILDINGENVELOPE	
21.	CW-2002	TWO PIECE JAMB MALE HALF	1.203" X 5.25" X .094"	6063-T6 ALUMINUM	OLDCASTLE BUILDINGENVELOPE	
22.	CW-2183	CORNER PRESSURE PLATE	1.884" X 5.401" X .125"	6063-T6 ALUMINUM	OLDCASTLE BUILDINGENVELOPE	
23.	CW-2188	CORNER FACE CAP	.546" X 4.062" X .062"	6063-T5 ALUMINUM	OLDCASTLE BUILDINGENVELOPE	
24.	CW-691	POCKET FILLER	.938" X 1.594" X .094"	6063-T5 ALUMINUM	OLDCASTLE BUILDINGENVELOPE	
25.	CW-2018	CORNER MULLION FEMALE HALF	1.724" X 7.094" X .140"	6063-T6 ALUMINUM	OLDCASTLE BUILDINGENVELOPE	
26.	CW-2019	CORNER MULLION MALE HALF	1.724" X 7.094" X .140"	6063-T6 ALUMINUM	OLDCASTLE BUILDINGENVELOPE	
27.	CW-2020	CORNER MULLION FILLER	1.302" X 2.50" X .078"	6063-T5 ALUMINUM	OLDCASTLE BUILDINGENVELOPE	
28.	D-226	DOOR JAMB	1.00" X 5.00" X .094"	6063-T6 ALUMINUM	OLDCASTLE BUILDINGENVELOPE	
28A.	D-231	SUB-FRAME HEADER	1.00" X 5.00" X .094"	6063-T6 ALUMINUM	OLDCASTLE BUILDINGENVELOPE	
29.	CW-709	3-1/2" FACE CAP	3.50" X .527" X .062"	6063-T6 ALUMINUM	OLDCASTLE BUILDINGENVELOPE	
30.	CW-2722	3-1/2" PRESSURE PLATE	3.40" X .450" X .094"	6063-T6 ALUMINUM	OLDCASTLE BUILDINGENVELOPE	
31.	CW-2720	EXPANSION HORIZONTAL TOP HALF	1.625" X 6.957" X .094"	6063-T6 ALUMINUM	OLDCASTLE BUILDINGENVELOPE	
32.	CW-2721	EXPANSION HORIZONTAL BOTTOM HALF	1.125" X 5.219" X .094"	6063-T6 ALUMINUM	OLDCASTLE BUILDINGENVELOPE	

NOTE #1: ALL VERTICALS PRESSURE PLATES SHALL BE CUT $\frac{1}{4}$" SHORT IN LENGTH TO ALLOW FOR WEEP SLOT

FLORIDA BUILDING CODE (High Velocity Hurricane Zone)

HR-251 CAPTURED CURTAIN WALL SYSTEM
LARGE MISSILE IMPACT INSULATED GLASS

F.P./M.C.V./A.G. DRAWN BY
11/17/11 DATE
11-123 DRAWING No
SHEET 4 OF 36

Oldcastle BuildingEnvelope™
803 Airport Rd - Terrell, TX 75160
www.OldcastleBE.com - Phone 800-869-4567

REV. No	DESCRIPTION	DATE
1	OLD 11-002	11/17/11
2		
3	-	-
4	-	-

©2011 TILTECO, INC

TILTECO INC.
TILLIT TESTING & ENGINEERING COMPANY
6355 N.W. 36th. St., Ste. 305, VIRGINIA GARDENS, FLORIDA 33166
Phone : (305)871-1530 . Fax : (305)871-1531
e-mail: tilteco@aol.com
EB-0006719
WALTER A. TILLIT Jr., P.E.
FLORIDA Lic. # 44167

WALTER A. TILLIT JR. LICENSE No. 44167 STATE OF FLORIDA PROFESSIONAL ENGINEER

P.E. SEAL/SIGNATURE/DATE

PRODUCT REVISED
as complying with the Florida Building Code
Acceptance No 11-1206.08
Expiration Date DEC 5, 2014
By Miami-Dade Product Control

MIAMI-DADE COUNTY

BILL OF MATERIALS (CONTINUED)

ITEM No.	PART NUMBER	DESCRIPTION	DIMENSIONS	MATERIAL	MANUFACTURER	NOTES
33.	HR-FP-4	MULLION END CAPS/WATER DIVERTER	3.5 X 2.00 X .062	RIGID VINYL	OLDCASTLE BUILDINGENVELOPE	SEE NOTE # 2 BELOW
34.	HR-FP-5	LEFT AND RIGHT JAMB END CAPS/WATER DIVERTER	2.96 X 0.78 X .062	RIGID VINYL	OLDCASTLE BUILDINGENVELOPE	SEE NOTE # 2 BELOW
36.	HR-FP-8	90 DEG MULLION END CAP	4.615 X 3.195 X .062	RIGID VINYL	OLDCASTLE BUILDINGENVELOPE	TOP & BOTTOM OF MULLION SEE NOTE # 2 BELOW
37.	HR-FP-12	WATER DIVERTER	1.50 X 1.00 X .062	RIGID VINYL	OLDCASTLE BUILDINGENVELOPE	1.50 LONG SEE NOTE # 2 BELOW
39.	HR-FP-14	TWO PART WALL JAMB SPLICE FEMALE HALF	5.00 X 1.484 X .125 X 6" LONG	6063-T6 ALUMINUM	OLDCASTLE BUILDINGENVELOPE	AT (2) PART JAMB CASE: ⑳ + ㉑
40.	HR-FP-15	HEAD ANCHOR SLEEVE	2 3/16" X 4 15/16" X X 2 1/2" LONG	6063-T6 ALUMINUM	OLDCASTLE BUILDINGENVELOPE	
41.	HR-FP-17	HEAD ANCHOR SLEEVE CORNER	2 3/16" X 6 3/16" X 3" LONG	6063-T6 ALUMINUM	OLDCASTLE BUILDINGENVELOPE	USED @ JAMBS
42.	HR-FP-24	HEAD ANCHOR LEFT	3 1/2" x 6" x 4 1/4" LONG	6063-T6 ALUMINUM	OLDCASTLE BUILDINGENVELOPE	
42A.	HR-FP-25	HEAD ANCHOR RIGHT	3 1/2" x 6" x 4 1/4" LONG	6063-T6 ALUMINUM	OLDCASTLE BUILDINGENVELOPE	
43.	FASTENER	ANCHOR BOLT	5/8"-11 X 4 1/2" SAE GRD 5 BOLT, HEX NUT AND WASHER	STEEL	VARIES	ZINC COATED, PER ASTM B-633
44.	**	STEEL DEADLOAD ANCHOR	4" X 6" X 5/16" X 5" LONG	A36 STEEL	VARIES	ZINC COATED, PER ASTM B-633.
45.	**	SLIP PAD	4" X 4" X .063	VINYL	KORALATH	USED @ MID POINT ANCHORS
46.	FASTENER	PERIMETER ANCHOR	3/8"-13 X 2" TYP F BOLT	STEEL	VARIES	ZINC COATED, PER ASTM B-633.
47.	**	STEEL DEADLOAD ANCHOR @ CORNER	4" X 8" X 1/4" X 5" LONG	A36 STEEL	VARIES	
48.	FASTENER	STEEL REINFORCING ATTACHMENT BOLT	1/4"-20 X 2" BOLT WITH WASHER AND NUT	STEEL	VARIES	ZINC COATED, PER ASTM B-633
49.	SM-5601	JOINT SEALANT TAPE	.125" X .750" X VARIES	BUTYL	SCHNEE-MOREHEAD	
50.	FG5000-PP-8	REINFORCING STEEL	4 5/8" X 1 1/4" X 1/4" CHANNEL	A36 STEEL	VARIES	USED @ VERT. CORNER MULLION, COAT ZINC RICH PRIMER
51.	RS-16	STEEL REINFORCING INCLUDES RS-25	3/8" X 4" STEEL BAR RS-25 WELDED EVERY 18" WITH 2"X 3/32" WELDS	A36 STEEL	VARIES	USED @ VERT. MULLION COAT ZINC RICH PRIMER, 76" LONG
52.	RS-17	STEEL REINFORCING INCLUDES RS-25	3/4" X 4" STL. BAR WITH RS-25	A36 STEEL	VARIES	
53.	RS-25	REINFORCING STEEL	4 3/4" X 1 7/8" X 1/4" CHANNEL	A36 STEEL	VARIES	COAT ZINC RICH PRIMER
54.	FASTENER	STEEL REINFORCING ATTACHMENT BOLT	1/4"-20 X 1 1/2" SAE GRADE 5 BOLT WITH WASHER AND NUT	STEEL	VARIES	THROUGH-BOLT @ INT HORIZONTALS
55.	HR-FP-18	TWO PART WALL JAMB SPLICE MALE HALF	.75" X 4.812" X .125"	6063-T6 ALUMINUM	OLDCASTLE BUILDINGENVELOPE	AT (2) PART JAMB CASE
59.	FASTENER	ATTACHMENT BOLT	1/4"-20 X 2 1/4" BOLT WITH WASHER AND NUT	STEEL	VARIES	
60.	FASTENER	ATTACHMENT BOLT	1/4"-20 X 3" SAE GRADE 5 BOLT WITH WASHER AND NUT	STEEL	VARIES	THROUGH-BOLT @ INT HORIZONTALS
63.	HR-FP-20	MULLION AND STANDARD JAMB SPLICE	2.16" X 4.96" X .125"X 6" LONG	6063-T6 ALUMINUM	OLDCASTLE BUILDINGENVELOPE	
64.	HR-FP-21	CORNER MULLION SPLICE	2.147" X 6.314" X .125"	6063-T6 ALUMINUM	OLDCASTLE BUILDINGENVELOPE	
65.	HR-FP-22	CORNER HEAD ANCHOR LEFT	2.147" X 6.314" X .25"	6063-T6 ALUMINUM	OLDCASTLE BUILDINGENVELOPE	
66.	HR-FP-23	CORNER HEAD ANCHOR RIGHT	2.147" X 6.314" X .25"	6063-T6 ALUMINUM	OLDCASTLE BUILDINGENVELOPE	

** NO PART NUMBER ASSIGNED
NOTE #2-BEAD OF DOW CORNING 995 SILICONE SHALL BE APPLIED TO FRAME SURFACE BEFORE PART IS INSTALLED

FLORIDA BUILDING CODE (High Velocity Hurricane Zone)

HR-251 CAPTURED CURTAIN WALL SYSTEM
LARGE MISSILE IMPACT INSULATED GLASS

F.P./M.C.V./A.G. DRAWN BY
11/17/11 DATE
11-123 DRAWING No
SHEET 5 OF 36

Oldcastle BuildingEnvelope™
803 Airport Rd - Terrell, TX 75160
www.OldcastleBE.com - Phone 800-869-4567

REV. No	DESCRIPTION	DATE
1	OLD 11-002	11/17/11
2		
3	-	-
4	-	-

©2011 TILTECO, INC

TILTECO INC.
TILLIT TESTING & ENGINEERING COMPANY
6355 N.W. 36th. St., Ste. 305, VIRGINIA GARDENS, FLORIDA 33166
Phone : (305)871-1530 . Fax : (305)871-1531
e-mail: tilteco@aol.com
EB-0006719
WALTER A. TILLIT Jr., P.E.
FLORIDA Lic. # 44167

WALTER A. TILLIT JR. LICENSE No 44167 STATE OF FLORIDA PROFESSIONAL ENGINEER
11/18/11
P.E. SEAL/SIGNATURE/DATE

PRODUCT REVISED
as complying with the Florida
Building Code
Acceptance No 11-1206.03
Expiration Date DEC 9 2014
By Miami-Dade Product Control

MIAMI-DADE COUNTY

ISOMETRIC ELEVATION FOR HR-251 IMPACT RESISTANT CAPTURED CURTAIN WALL SYSTEM

N.T.S.

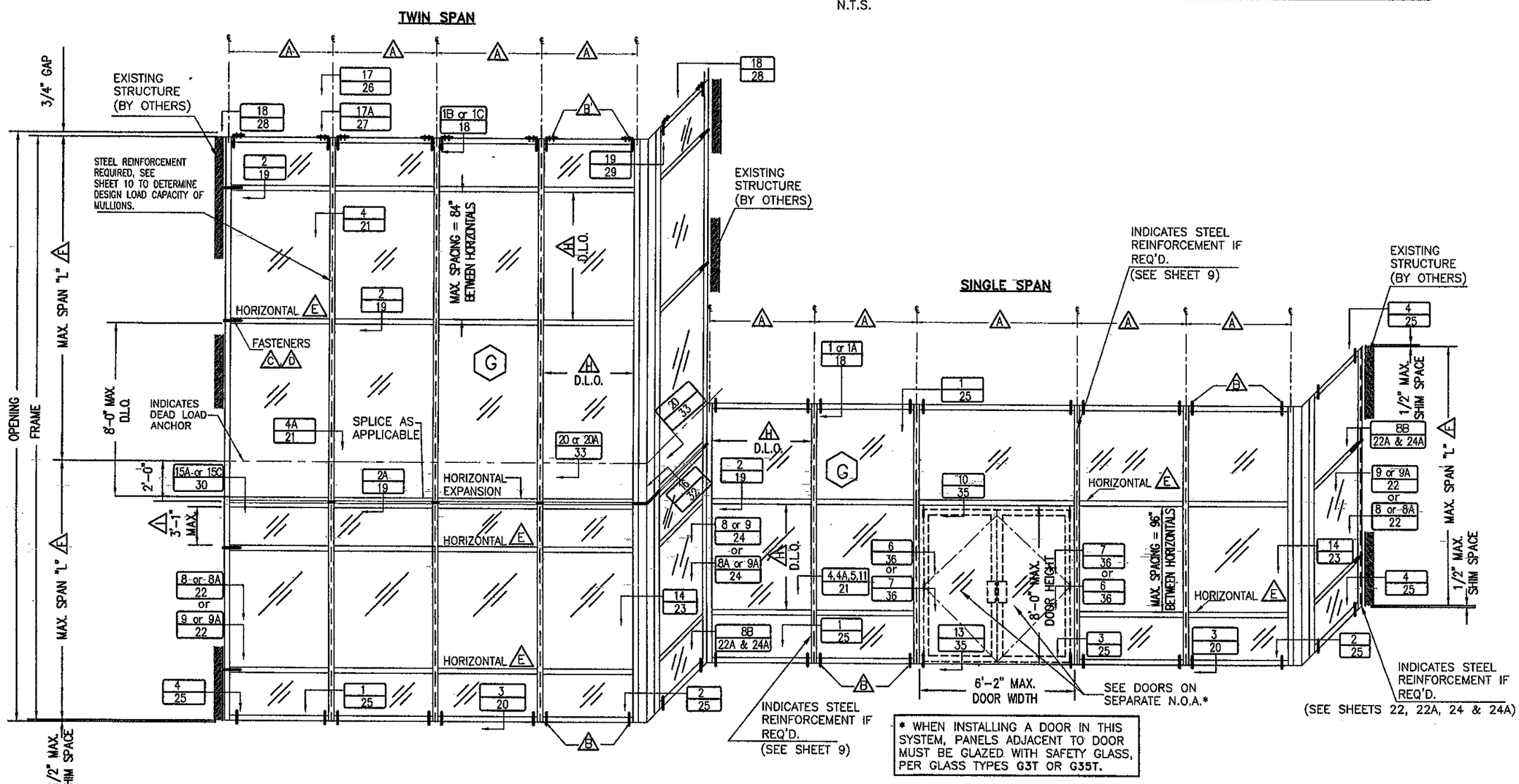

* WHEN INSTALLING A DOOR IN THIS SYSTEM, PANELS ADJACENT TO DOOR MUST BE GLAZED WITH SAFETY GLASS, PER GLASS TYPES G3T OR G35T.

FOOT NOTES:

- (A) FOR MULLION AND JAMB SPACING AND MAX. MULLION SPAN SEE SHEETS 9, 10 AND 22A.
- (B) FOR HEAD (AT SINGLE SPAN CASE) AND SILL (AT SINGLE AND TWIN SPAN CASES), FASTENERS QUANTITY, TYPES AND SPECS SEE SHEET 12.
- (B') FOR HEAD (AT TWIN SPAN), FASTENERS QUANTITY, TYPES AND SPECS SEE SHEET 13.
- (C) FOR JAMB FASTENERS QUANTITY, TYPES AND SPECS SEE SHEETS 14 THRU 17.
- (D) SEE SHEETS 14 THRU 17 FOR MAXIMUM A.S.D DESIGN PRESSURE RATING FOR JAMBS CONNECTED TO EXISTING STRUCTURE.
- (E) USE OF HORIZONTALS (SEE SECTION 2/19 AND 2A/19) DESIGN LOADS FOR LIMITATIONS.
- (F) FOR MAXIMUM MULLION AND JAMB SPAN SEE SHEETS 9, 10 AND 22A.
- (G) FOR GLAZING DETAILS AND GLASS SCHEDULE SEE SHEET 7.
- (H) FOR MAXIMUM D.L.O. SEE SCHEDULE ON SHEET 8.
- (I) 3 1/2" EXPANSION HORIZONTAL SHALL ALWAYS BE ACCOMPANIED BY A 2 1/2"HORIZONTAL BELOW IT @ 37" MAXIMUM DISTANCE.

FLORIDA BUILDING CODE (High Velocity Hurricane Zone)

F.P./M.C.V./A.G. DRAWN BY

11/17/11 DATE

11-123 DRAWING No

SHEET 6 OF 36

HR-251 CAPTURED CURTAIN WALL SYSTEM
LARGE MISSILE IMPACT INSULATED GLASS

Oldcastle BuildingEnvelope™
803 Airport Rd - Terrell, TX 75160
www.OldcastleBE.com - Phone 800-869-4567

REV. No	DESCRIPTION	DATE
1	OLD 11-022	11/17/11
2	HVHZ UNDER CODE EDIT. 2012	04/07/11

REV. No	DESCRIPTION	DATE
3	-	-
4	-	-

©2011 TILTECO, INC

TILTECO INC.
TILLIT TESTING & ENGINEERING COMPANY
6355 N.W. 36th. St, Ste. 305, VIRGINIA GARDENS, FLORIDA 33166
Phone : (305)871-1530 . Fax : (305)871-1531
e-mail: tilteco@aol.com
EB-0006719
WALTER A. TILLIT JR., P.E.
FLORIDA Lic. # 44167

WALTER A. TILLIT JR. LICENSE NO. 44167 STATE OF FLORIDA PROFESSIONAL ENGINEER

11/22/11

P.E. SEAL/SIGNATURE/DATE

PRODUCT REVISED
as complying with the Florida Building Code
Acceptance No 11-1206.08
Expiration Date DEC. 7, 2014
By Manuel Gia
Miami-Dade Product Control

MIAMI-DADE COUNTY

TYPICAL GLAZING DETAILS

* USE 13/16" MIN. GLASS BITE AT CORNER MULLION LOCATIONS (SEE SHEETS 25 AND 32)

SCALE 1/8" = 1"

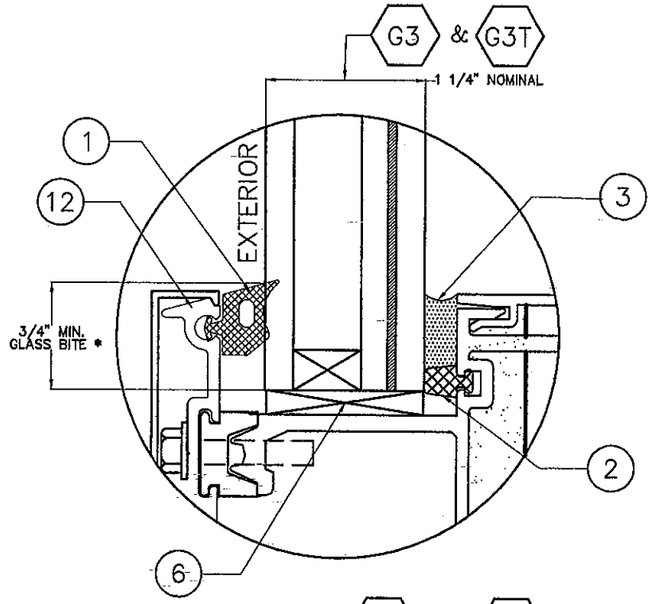

GLASS TYPES G3 & G3T

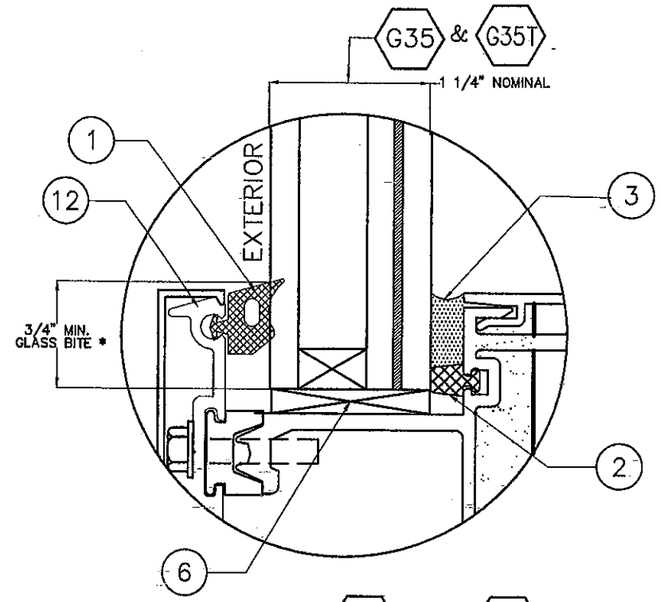

GLASS TYPES G35 & G35T

GLASS SCHEDULE

GLASS LABEL	GLASS COMPOSITION	MANUFACTURER NAME	MAX. D.L.O.	MISSILE TYPE
G3	1 1/4" INSULATED LAMINATED GLASS CONSISTING OF EXTERIOR 1/4" H.S. – 1/2" AIR SPACE – 1/4" H.S. – 090" SENTRY GLASS PLUS IONOPLAST INTERLAYER – 1/4" H.S.	DUPONT	SEE SCHEDULE ON SHEET 8	LARGE MISSILE IMPACT
G3T	1 1/4" INSULATED LAMINATED GLASS CONSISTING OF EXTERIOR 1/4" TEMP. – 1/2" AIR SPACE – 1/4" H.S. – 090" SENTRY GLASS PLUS IONOPLAST INTERLAYER – 1/4" H.S.	DUPONT	SEE SCHEDULE ON SHEET 8	LARGE MISSILE IMPACT
G35	1 1/4" INSULATED LAMINATED GLASS CONSISTING OF EXTERIOR 1/4" H.S. – 1/2" AIR SPACE –1/4" H.S. – 0.075" SOLUTIA VANCEVA/STORMGLASS COMPOSITE INTERLAYER – 1/4" H.S.	SOLUTIA	SEE SCHEDULE ON SHEET 8	LARGE MISSILE IMPACT
G35T	1 1/4" INSULATED LAMINATED GLASS CONSISTING OF EXTERIOR 1/4" TEMP. – 1/2" AIR SPACE –1/4" H.S. – 0.075" SOLUTIA VANCEVA/STORMGLASS COMPOSITE INTERLAYER – 1/4" H.S.	SOLUTIA	SEE SCHEDULE ON SHEET 8	LARGE MISSILE IMPACT

FLORIDA BUILDING CODE (High Velocity Hurricane Zone)

HR-251 CAPTURED CURTAIN WALL SYSTEM
LARGE MISSILE IMPACT INSULATED GLASS

Oldcastle BuildingEnvelope™
803 Airport Rd - Terrell, TX 75160
www.OldcastleBE.com - Phone 800-869-4567

REV. No	DESCRIPTION	DATE	REV. No	DESCRIPTION	DATE
1	OLD 11-002	11/17/11	3	-	-
2	CST & CGST ADDED	04/07/11	4	-	-

F.P./M.C.V./A.G.
DRAWN BY

11/17/11
DATE

11-123
DRAWING No

SHEET 7 OF 36

©2011 TILTECO, INC

TILTECO INC.
TILLIT TESTING & ENGINEERING COMPANY
6355 N.W. 36th. St., Ste. 305, VIRGINA GARDENS, FLORIDA 33166
Phone : (305)871-1530 - Fax : (305)871-1531
e-mail: tilteco@aol.com
EB-0006719
WALTER A. TILLIT Jr., P.E.
FLORIDA Lic. # 44167

WALTER A. TILLIT JR. LICENSE 44167 STATE OF FLORIDA PROFESSIONAL ENGINEER

11/23/10

P.E. SEAL/SIGNATURE/DATE

PRODUCT REVISED
as complying with the Florida
Building Code
Acceptance No 11-1206.08
Expiration Date DEC 27 2014
By Manuel Perez
Miami-Dade Product Control

MIAMI-DADE COUNTY

MAXIMUM FRAME WIDTH "b" AND FRAME LENGTH "a" VERSUS A.S.D. DESIGN PRESSURE RATING (psf) SCHEDULE *

GLASS TYPES G3 & G3T		
DIMENSION "b"	DIMENSION "a"	MAXIMUM A.S.D. DESIGN PRESSURE RATING(psf)
24"	from 24" to 96"	±90.0
30"	from 30" to 96"	±90.0
36"	from 36" to 96"	±90.0
42"	from 42" to 96"	±90.0
48"	from 48" to 96"	±90.0
54"	from 54" to 96"	±90.0
57.5"	from 57.5" to 96"	±90.0
63.5"	from 63.5" to 86"	±81.0
69.5"	from 69.5" to 79"	±74.0

GLASS TYPES G35 & G35T		
DIMENSION "b"	DIMENSION "a"	MAXIMUM A.S.D. DESIGN PRESSURE RATING(psf)
24"	from 24" to 96"	±100.0
30"	from 30" to 96"	±100.0
36"	from 36" to 96"	±100.0
42"	from 42" to 96"	±100.0
48"	from 48" to 96"	±100.0
54"	from 54" to 96"	±100.0
57.5"	from 57.5" to 96"	±100.0
63.5"	from 63.5" to 87"	±90.0
69.5"	from 69.5" to 77"	±82.0

DIMENSIONS LEGEND

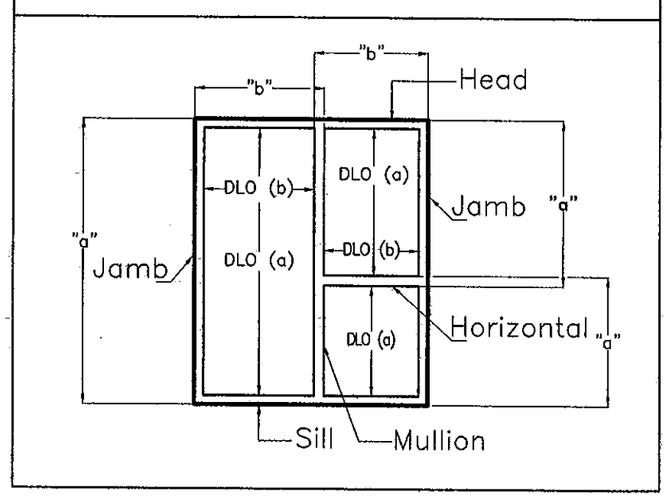

*** DETERMINATION OF MAXIMUM DAY LIGHT OPENING (D.L.O.) AT EACH END OF GLASS GIVEN "b" & "a"**

SIDE	MAX. DAY LIGHT OPENING	
	(D.L.O.) Formula at vertical & jamb mullions	(D.L.O.) Formula at horizontal, head & sill frames
MAX. D.L.O. (b) (SHORT SIDE)	"b"–5.00"	--
MAX. D.L.O. (a) (LONG SIDE)	--	"a"–5.00"

FLORIDA BUILDING CODE (High Velocity Hurricane Zone)

HR-251 CAPTURED CURTAIN WALL SYSTEM
LARGE MISSILE IMPACT INSULATED GLASS

F.P./M.C.V./A.G. DRAWN BY

11/17/11 DATE

11-123 DRAWING No

SHEET 8 OF 36

Oldcastle BuildingEnvelope™
803 Airport Rd - Terrell, TX 75160
www.OldcastleBE.com - Phone 800-869-4567

REV. No	DESCRIPTION	DATE	REV. No	DESCRIPTION	DATE
1	OLD 11-002	11/17/11	3	-	-
2	GST & G35T ADDED	04/07/13	4	-	-

©2011 TILTECO, INC

TILTECO INC.
TILLIT TESTING & ENGINEERING COMPANY
6355 N.W. 36th. St., Ste. 306, VIRGINIA GARDENS, FLORIDA 33166
Phone : (305)871-1530 Fax : (305)871-1531
e-mail: tilteco@aol.com
EB-0006719
WALTER A. TILLIT Jr., P.E.
FLORIDA Lic. # 44167

WALTER A. TILLIT JR. LICENSE No. 44167 STATE OF FLORIDA PROFESSIONAL ENGINEER

P.E. SEAL/SIGNATURE/DATE

PRODUCT REVISED
as complying with the Florida
Building Code
Acceptance No 11-1206.08
Expiration Date DEC 4 2014
By Miami Dade Product Control

MIAMI-DADE COUNTY

HR-251 SINGLE SPAN MULLION

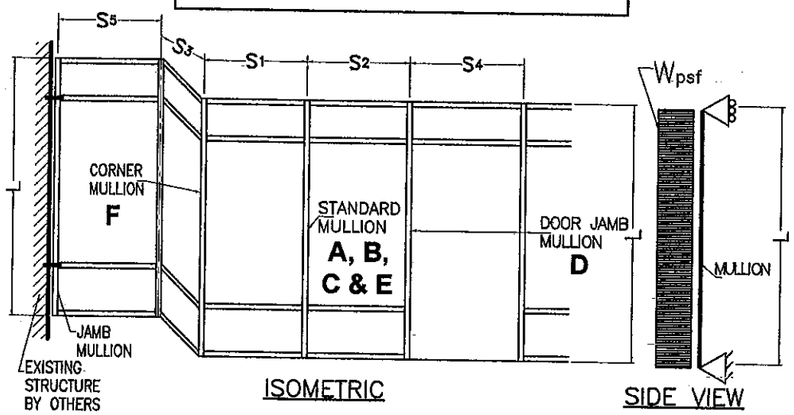

ISOMETRIC

SIDE VIEW

L = MULLION SPAN ; S1, S2, S3, S4 & S5 = MULLION SPACING

EFFECTIVE SPACING $b = \frac{S_1 + S_2}{2}$ (FOR STANDARD MULLION)

EFFECTIVE SPACING $b = \frac{S_1 + S_3}{2}$ (FOR CORNER MULLION)

EFFECTIVE SPACING $b = \frac{S_2 + S_4}{2}$ (FOR DOOR JAMB MULLION)

EFFECTIVE SPACING $b = \frac{S_5}{2}$ (FOR JAMB MULLION)

CASE DEFINITIONS

CASE 1 : SINGLE SPAN UNREINFORCED STANDARD MULLION **A** (SEE DET. 5/21)

CASE 2 : SINGLE SPAN REINFORCED STANDARD MULLION **B** FULL HEIGHT. (SEE DET. 4/21)

CASE 3 : SINGLE SPAN HEAVILY REINFORCED STANDARD MULLION **C** FULL HEIGHT. (SEE DET. 4A/21)

CASE 4 : SINGLE SPAN UNREINFORCED STANDARD HEAVY MULLION **E** (SEE DET. 11/21)

CASE 5 : SINGLE SPAN REINFORCED DOOR MULLION **F** FULL HEIGHT. (SEE DET. 7/36)

CASE 6 : SINGLE SPAN REINFORCED CORNER MULLION **G** FULL HEIGHT. (SEE DET. 14/23)

* MAXIMUM A.S.D. DESIGN PRESSURE RATING FOR STANDARD, DOOR JAMB & CORNER MULLION WILL AUTOMATICALLY QUALIFY A.S.D. DESIGN PRESSURE RATINGS FOR JAMBS FOR ANY GIVEN MULLION SPACING. MAXIMUM JAMB SPAN (DISTANCE BETWEEN ANCHORAGE POINTS) IS 96", AND JAMB ANCHORAGE SHALL BE PERFORMED AT HORIZONTAL RAIL LOCATIONS (EXCEPT AT EXPANSION HORIZONTAL RAILS).

A — CASE:1 — LIGHT MULLION (14) + (15) — Ix= 10.513 in4, Sx= 2.7174 in3 — IN TERMS OF ALUM.

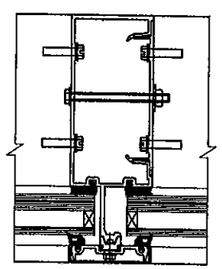

B — CASE:2 — LIGHT MULLION (14) + (15) W/ STEEL CHANNEL (53) — Ix= 28.526 in4, Sx= 6.6447 in3 — IN TERMS OF ALUM.

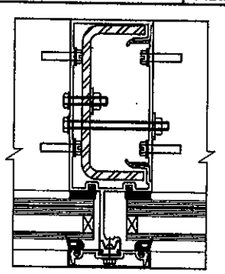

C — CASE:3 — LIGHT MULLION (14) + (15) W/ STEEL CHANNEL (53) & 3/8"x4" STEEL BAR (51) — Ix= 34.571 in4, Sx= 7.9639 in3 — IN TERMS OF ALUM.

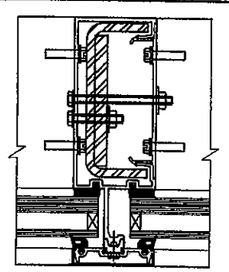

E — CASE:4 — HEAVY MULLION (15) + (18) — Ix= 14.664 in4, Sx= 3.6363 in3 — IN TERMS OF ALUM.

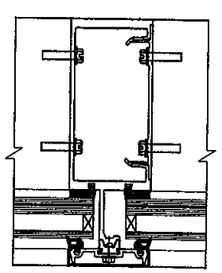

F — CASE:5 — LIGHT MULLION (14) + (15) W/ STEEL CHANNEL (53) & 3/4"x4" STEEL BAR (52) — Ix= 40.604 in4, Sx= 9.2970 in3 — IN TERMS OF ALUM.

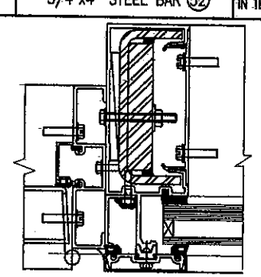

G — CASE:6 — CORNER MULLION (25) + (26) W/ STEEL CHANNEL (50) — Ix= 31.499 in4, Sx= 7.4308 in3 — IN TERMS OF ALUM.

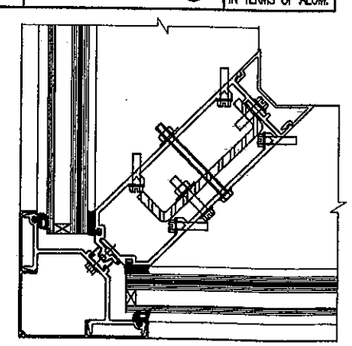

MAXIMUM A.S.D. DESIGN PRESSURE RATING FOR STANDARD, DOOR JAMB & CORNER MULLIONS *

MAXIMUM MULLION SPAN "L"(FT) SCHEDULE FOR A GIVEN A.S.D. DESIGN PRESSURE RATING (psf) AND A GIVEN MULLION EFFECTIVE SPACING "b"

MAXIMUM A.S.D. DESIGN PRESSURE RATING (psf)	EFFECTIVE SPACING "b" (ft-in)	SINGLE SPAN MULLIONS CASE 1 MULLION: A "L" (ft-in)	CASE 2 MULLION: B "L" (ft-in)	CASE 3 MULLION: C "L" (ft-in)	CASE 4 MULLION: E "L" (ft-in)	CASE 5 MULLION: F "L" (ft-in)	CASE 6 MULLION: G "L" (ft-in)
60.0	3'-6"	10'-0"	12'-6"	12'-6"	10'-0"	12'-6"	12'-6"
	4'-0"	10'-0"	12'-6"	12'-6"	10'-0"	12'-6"	12'-6"
	4'-6"	9'-8"	12'-6"	12'-6"	10'-0"	12'-6"	12'-6"
	5'-0"	8'-8"	12'-6"	12'-6"	10'-0"	12'-6"	12'-6"
	5'-6"	7'-11"	12'-6"	12'-6"	10'-0"	12'-6"	12'-6"
	6'-0"	7'-3"	12'-6"	12'-6"	9'-11"	12'-6"	12'-6"
65.0	3'-6"	10'-0"	12'-6"	12'-6"	10'-0"	12'-6"	12'-6"
	4'-0"	10'-0"	12'-6"	12'-6"	10'-0"	12'-6"	12'-6"
	4'-6"	8'-11"	12'-6"	12'-6"	10'-0"	12'-6"	12'-6"
	5'-0"	8'-0"	12'-6"	12'-6"	10'-0"	12'-6"	12'-6"
	5'-6"	7'-3"	12'-6"	12'-6"	10'-0"	12'-6"	12'-6"
	6'-0"	6'-8"	11'-8"	12'-6"	9'-2"	12'-6"	12'-6"
70.0	3'-6"	-	12'-6"	12'-6"	10'-0"	12'-6"	12'-6"
	4'-0"	-	12'-6"	12'-6"	10'-0"	12'-6"	12'-6"
	4'-6"	-	12'-6"	12'-6"	10'-0"	12'-6"	12'-6"
	5'-0"	-	12'-6"	12'-6"	10'-0"	12'-6"	12'-6"
	5'-6"	-	11'-10"	12'-6"	9'-3"	12'-6"	12'-6"
	6'-0"	-	10'-10"	12'-6"	8'-6"	12'-6"	12'-6"
75.0	3'-6"	-	12'-6"	12'-6"	10'-0"	12'-6"	12'-6"
	4'-0"	-	12'-6"	12'-6"	10'-0"	12'-6"	12'-6"
	4'-6"	-	12'-6"	12'-6"	10'-0"	12'-6"	12'-6"
	5'-0"	-	12'-2"	12'-6"	9'-6"	12'-6"	12'-6"
	5'-6"	-	11'-1"	12'-6"	8'-8"	12'-6"	12'-6"
	6'-0"	-	10'-2"	12'-3"	7'-11"	12'-6"	12'-6"
76.0	3'-6"	-	12'-6"	12'-6"	10'-0"	12'-6"	12'-6"
	4'-0"	-	12'-6"	12'-6"	10'-0"	12'-6"	12'-6"
	4'-6"	-	12'-6"	12'-6"	10'-0"	12'-6"	12'-6"
	5'-0"	-	12'-0"	12'-6"	9'-5"	12'-6"	12'-6"
	5'-6"	-	10'-11"	12'-6"	8'-6"	12'-6"	12'-6"
	6'-0"	-	10'-0"	12'-1"	7'-10"	12'-6"	12'-4"
80.0	3'-6"	-	12'-6"	12'-6"	-	12'-6"	12'-6"
	4'-0"	-	12'-6"	12'-6"	-	12'-6"	12'-6"
	4'-6"	-	12'-6"	12'-6"	-	12'-6"	12'-6"
	5'-0"	-	11'-5"	12'-6"	-	12'-6"	12'-6"
	5'-6"	-	10'-4"	12'-6"	-	12'-6"	12'-6"
	6'-0"	-	9'-6"	11'-6"	-	12'-6"	11'-9"
85.0	3'-6"	-	12'-6"	12'-6"	-	12'-6"	12'-6"
	4'-0"	-	12'-6"	12'-6"	-	12'-6"	12'-6"
	4'-6"	-	11'-11"	12'-6"	-	12'-6"	12'-6"
	5'-0"	-	10'-9"	12'-6"	-	12'-6"	12'-6"
	5'-6"	-	9'-9"	11'-9"	-	12'-6"	12'-0"
	6'-0"	-	8'-11"	10'-9"	-	12'-4"	11'-0"
90.0	3'-6"	-	12'-6"	12'-6"	-	12'-6"	12'-6"
	4'-0"	-	12'-6"	12'-6"	-	12'-6"	12'-6"
	4'-6"	-	11'-3"	12'-6"	-	12'-6"	12'-6"
	5'-0"	-	10'-2"	12'-3"	-	12'-6"	12'-6"
	5'-6"	-	9'-3"	11'-1"	-	12'-6"	11'-4"
	6'-0"	-	8'-5"	10'-2"	-	11'-8"	10'-5"
95.0	3'-6"	-	12'-6"	12'-6"	-	-	-
	4'-0"	-	12'-0"	12'-6"	-	-	-
	4'-6"	-	10'-8"	12'-6"	-	-	-
	5'-0"	-	9'-7"	11'-7"	-	-	-
	5'-6"	-	8'-9"	10'-6"	-	-	-
	6'-0"	-	8'-0"	9'-8"	-	-	-
100.0	3'-6"	-	12'-6"	12'-6"	-	-	-
	4'-0"	-	11'-5"	12'-6"	-	-	-
	4'-6"	-	10'-2"	12'-3"	-	-	-
	5'-0"	-	9'-2"	11'-0"	-	-	-
	5'-6"	-	8'-4"	10'-0"	-	-	-
	6'-0"	-	7'-7"	9'-2"	-	-	-

FLORIDA BUILDING CODE (High Velocity Hurricane Zone)

©2011 TILTECO, INC

TILTECO INC.
TILLIT TESTING & ENGINEERING COMPANY
6355 N.W. 36th. St., Ste. 305, VIRGINIA GARDENS, FLORIDA 33166
Phone : (305)871-1530 . Fax : (305)871-1531
e-mail: tilteco@aol.com
EB-0006719
WALTER A. TILLIT Jr., P.E.
FLORIDA Lic. # 44167

F.P./M.C.V./A.G. DRAWN BY | 11/17/11 DATE | 11-123 DRAWING No | SHEET 9 OF 36

HR-251 CAPTURED CURTAIN WALL SYSTEM LARGE MISSILE IMPACT INSULATED GLASS

Oldcastle BuildingEnvelope™
803 Airport Rd - Terrell, TX 75160
www.OldcastleBE.com - Phone 800-869-4567

REV. No	DESCRIPTION	DATE
1	O.D. 11-002	11/7/11
2		
3	-	-
4	-	-

WALTER A. TILLIT JR. LICENSE 44167 STATE OF FLORIDA PROFESSIONAL ENGINEER

P.E. SEAL/SIGNATURE/DATE 11/22/11

PRODUCT REVISED as complying with the Florida Building Code Acceptance No 11-1206.08 Expiration Date DEC 7 2014 By Miami-Dade Product Control

MIAMI-DADE COUNTY

HR-251 TWIN SPAN MULLION

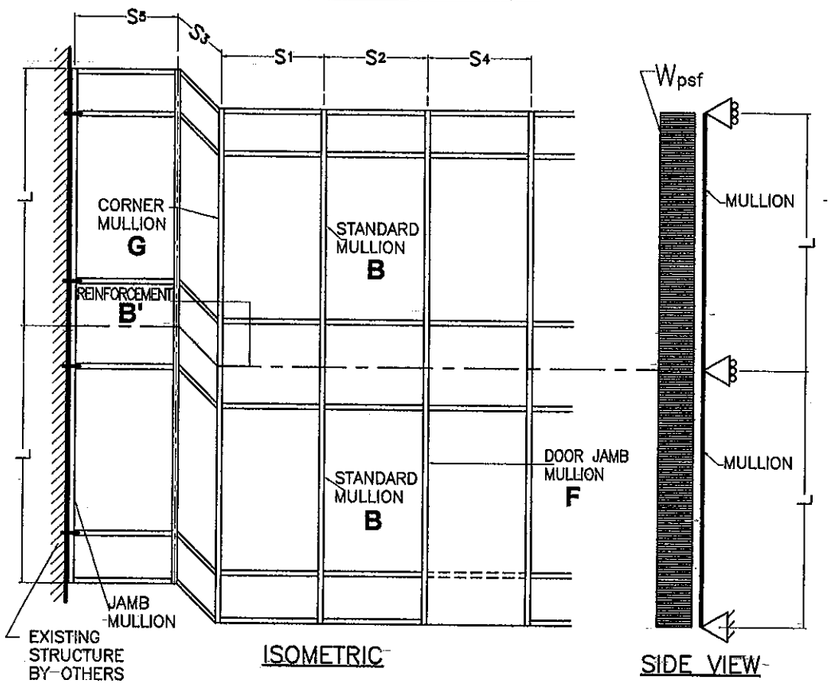

ISOMETRIC

SIDE VIEW

CASE DEFINITIONS

CASE 7 : TWIN SPAN REINFORCED STANDARD MULLION **B** FULL HEIGHT. (SEE DET. 4/21) W/ REQUIRED 76" LONG ADDITIONAL REINFORCEMENT **B'** AT DEAD AND WIND LOAD ANCHOR LOCATION SEE SHEET 11.

CASE 8 : TWIN SPAN REINFORCED CORNER MULLION **G** FULL HEIGHT. (SEE DET. 14/23)

CASE 9 : REINFORCED DOOR JAMB MULLION **F** FULL HEIGHT. (SEE DET. 7/36)

L = MULLION SPAN ; S1, S2, S3, S4 & S5 = MULLION SPACING

EFFECTIVE SPACING $b = \frac{S_1 + S_2}{2}$ (FOR STANDARD MULLION)

EFFECTIVE SPACING $b = \frac{S_1 + S_3}{2}$ (FOR CORNER MULLION)

EFFECTIVE SPACING $b = \frac{S_2 + S_4}{2}$ (FOR DOOR JAMB MULLION)

EFFECTIVE SPACING $b = \frac{S_5}{2}$ (FOR JAMB MULLION)

MAXIMUM A.S.D. DESIGN PRESSURE RATING FOR STANDARD, DOOR JAMB & CORNER MULLIONS *

MAXIMUM MULLION SPAN "L"(FT) SCHEDULE FOR A GIVEN A.S.D. DESIGN PRESSURE RATING (psf) AND A GIVEN MULLION EFFECTIVE SPACING "b"

MAXIMUM A.S.D. DESIGN PRESSURE RATING (p.s.f.)	EFFECTIVE SPACING "b" (ft-in)	TWIN SPAN MULLIONS CASE 7 MULLION: B "L" (ft-in)	CASE 8 MULLION: G "L" (ft-in)	CASE 9 ◊ MULLION: F "L" (ft-in)
60.0	3 '- 6 "	12 '- 6 "	12 '- 6 "	12 '- 6 "
	4 '- 0 "	12 '- 6 "	12 '- 6 "	12 '- 6 "
	4 '- 6 "	12 '- 6 "	12 '- 6 "	12 '- 6 "
	5 '- 0 "	12 '- 6 "	12 '- 6 "	12 '- 6 "
	5 '- 6 "	12 '- 6 "	12 '- 6 "	12 '- 6 "
65.0	3 '- 6 "	12 '- 6 "	12 '- 6 "	12 '- 6 "
	4 '- 0 "	12 '- 6 "	12 '- 6 "	12 '- 6 "
	4 '- 6 "	12 '- 6 "	12 '- 6 "	12 '- 6 "
	5 '- 0 "	12 '- 6 "	12 '- 6 "	12 '- 6 "
	5 '- 6 "	12 '- 6 "	12 '- 6 "	12 '- 6 "
70.0	3 '- 6 "	12 '- 6 "	12 '- 6 "	12 '- 6 "
	4 '- 0 "	12 '- 6 "	12 '- 6 "	12 '- 6 "
	4 '- 6 "	12 '- 6 "	12 '- 6 "	12 '- 6 "
	5 '- 0 "	12 '- 6 "	12 '- 6 "	12 '- 6 "
	5 '- 6 "	12 '- 6 "	12 '- 6 "	12 '- 6 "
75.0	3 '- 6 "	12 '- 6 "	12 '- 6 "	12 '- 6 "
	4 '- 0 "	12 '- 6 "	12 '- 6 "	12 '- 6 "
	4 '- 6 "	12 '- 6 "	12 '- 6 "	12 '- 6 "
	5 '- 0 "	12 '- 6 "	12 '- 6 "	12 '- 6 "
	5 '- 6 "	12 '- 6 "	12 '- 6 "	12 '- 6 "
76.0	3 '- 6 "	12 '- 6 "	12 '- 6 "	12 '- 6 "
	4 '- 0 "	12 '- 6 "	12 '- 6 "	12 '- 6 "
	4 '- 6 "	12 '- 6 "	12 '- 6 "	12 '- 6 "
	5 '- 0 "	12 '- 6 "	12 '- 6 "	12 '- 6 "
	5 '- 6 "	12 '- 6 "	12 '- 6 "	12 '- 6 "
80.0	3 '- 6 "	12 '- 6 "	12 '- 6 "	12 '- 6 "
	4 '- 0 "	12 '- 6 "	12 '- 6 "	12 '- 6 "
	4 '- 6 "	12 '- 6 "	12 '- 6 "	12 '- 6 "
	5 '- 0 "	12 '- 6 "	12 '- 6 "	12 '- 6 "
	5 '- 6 "	12 '- 6 "	12 '- 6 "	12 '- 6 "
85.0	3 '- 6 "	12 '- 6 "	12 '- 6 "	12 '- 6 "
	4 '- 0 "	12 '- 6 "	12 '- 6 "	12 '- 6 "
	4 '- 6 "	12 '- 6 "	12 '- 6 "	12 '- 6 "
	5 '- 0 "	12 '- 6 "	12 '- 6 "	12 '- 6 "
	5 '- 6 "	12 '- 0 "	12 '- 3 "	12 '- 6 "
90.0	3 '- 6 "	12 '- 6 "	12 '- 6 "	12 '- 6 "
	4 '- 0 "	12 '- 6 "	12 '- 6 "	12 '- 6 "
	4 '- 6 "	12 '- 6 "	12 '- 6 "	12 '- 6 "
	5 '- 0 "	12 '- 6 "	12 '- 6 "	12 '- 6 "
	5 '- 6 "	11 '- 4 "	11 '- 11 "	12 '- 6 "
95.0	3 '- 6 "	-	-	-
	4 '- 0 "	-	-	-
	4 '- 6 "	-	-	-
	5 '- 0 "	-	-	-
	5 '- 6 "	-	-	-
100.0	3 '- 6 "	-	-	-
	4 '- 0 "	-	-	-
	4 '- 6 "	-	-	-
	5 '- 0 "	-	-	-
	5 '- 6 "	-	-	-

B — CASE:7 LIGHT MULLION (14) + (15) W/ STEEL CHANNEL (53) — Ix= 34.942 in4, Sx= 7.748 in3 — IN TERMS OF ALUM.

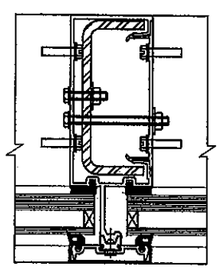

REINFORCEMENT B' — CASE:7' (AT DEAD LOAD & WIND ANCHOR LOCATION) FOR B WITH 3/8"x4" STEEL BAR (51) — Ix= 41.220 in4, Sx= 8.922 in3 — IN TERMS OF ALUM.

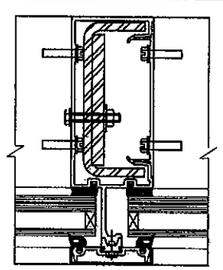

G — CASE:8 CORNER MULLION (25) + (26) W/ STEEL CHANNEL (50) — Ix= 31.499 in4, Sx= 7.4308 in3 — IN TERMS OF ALUM.

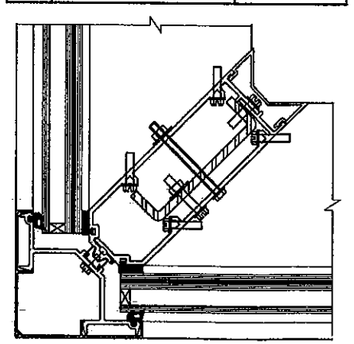

F — CASE:9 ◊ LIGHT MULLION (14) + (15) W/ STEEL CHANNEL (53) & 3/4"x4" STEEL BAR (52) — Ix= 40.604 in4, Sx= 9.2970 in3 — IN TERMS OF ALUM.

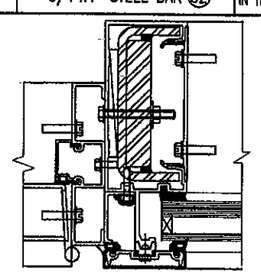

◊ THIS MULLION SHALL BE USED FULL HEIGHT, i.e. ON BOTH SPANS OF THE TWIN SPAN CONDITION.

* MAXIMUM A.S.D. DESIGN PRESSURE RATING FOR STANDARD, DOOR JAMB & CORNER MULLION WILL AUTOMATICALLY QUALIFY A.S.D. DESIGN PRESSURE RATINGS FOR JAMBS FOR ANY GIVEN MULLION SPACING. MAXIMUM JAMB SPAN (DISTANCE BETWEEN ANCHORAGE POINTS) IS 84", AND JAMB ANCHORAGE SHALL BE PERFORMED AT HORIZONTAL LOCATIONS (EXCEPT AT EXPANSION HORIZONTALS).

FLORIDA BUILDING CODE (High Velocity Hurricane Zone)

HR-251 CAPTURED CURTAIN WALL SYSTEM
LARGE MISSILE IMPACT INSULATED GLASS

F.R./M.C.V./A.G. — DRAWN BY
11/17/11 — DATE
11-123 — DRAWING No
SHEET 10 OF 36

Oldcastle BuildingEnvelope™
803 Airport Rd - Terrell, TX 75160
www.OldcastleBE.com - Phone 800-869-4567

REV. No	DESCRIPTION	DATE
1	OLD 11-002	11/7/11
2		
3	-	-
4	-	-

©2011 TILTECO, INC

TILTECO INC.
TILLIT TESTING & ENGINEERING COMPANY
6355 N.W. 36th. St., Ste. 305, VIRGINIA GARDENS, FLORIDA 33166
Phone : (305)871-1530 , Fax : (305)871-1531
e-mail: tilteco@aol.com
EB-0006719
WALTER A. TILLIT Jr., P.E.
FLORIDA Lic. # 44167

WALTER A. TILLIT JR. LICENSE No. 44167 STATE OF FLORIDA PROFESSIONAL ENGINEER

P.E. SEAL/SIGNATURE/DATE

PRODUCT REVISED as complying with the Florida Building Code
Acceptance No 11-1206.03
Expiration Date DEC. 9, 2014
By Miami-Dade Product Control

MIAMI-DADE COUNTY

OPTIONS FOR TWIN SPAN STANDARD AND CORNER MULLIONS INSTALLATION FOR HR-251 CURTAIN WALL SYSTEM

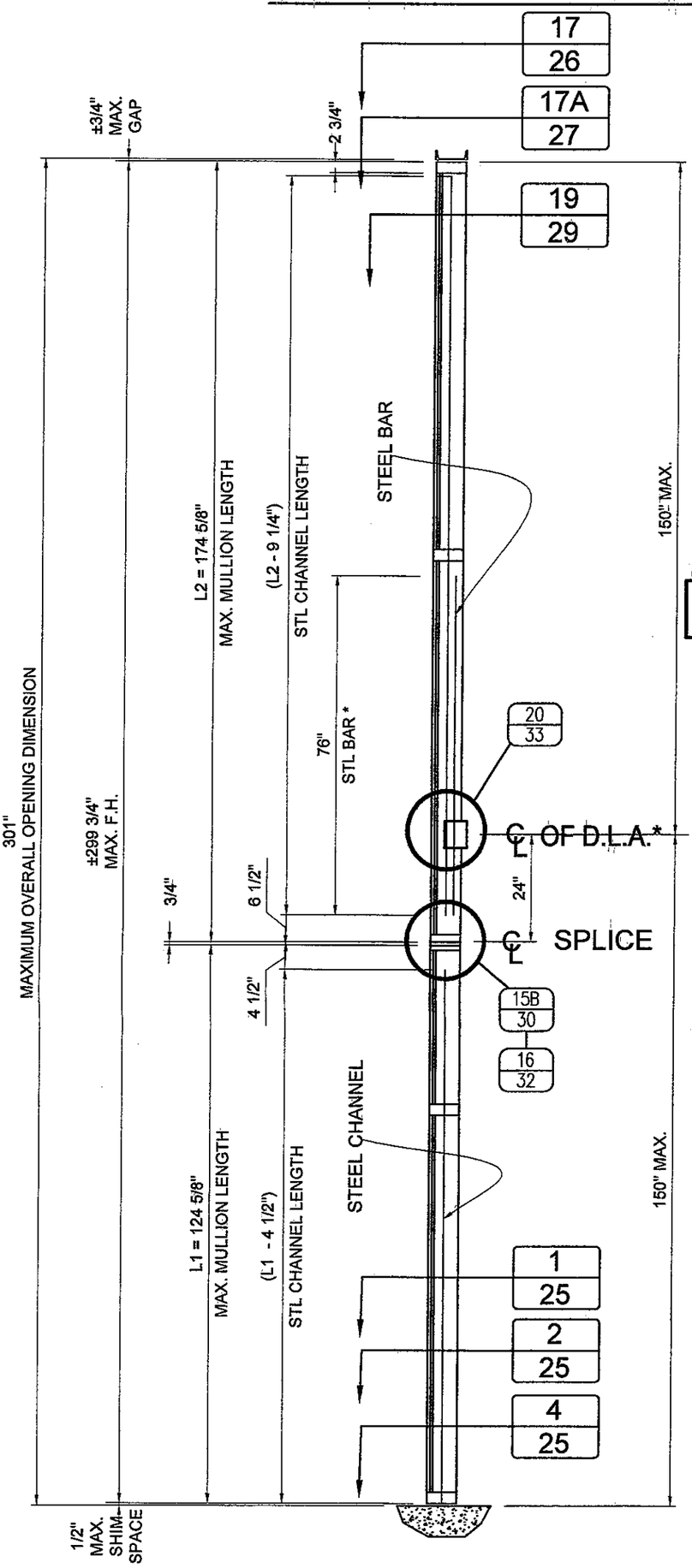

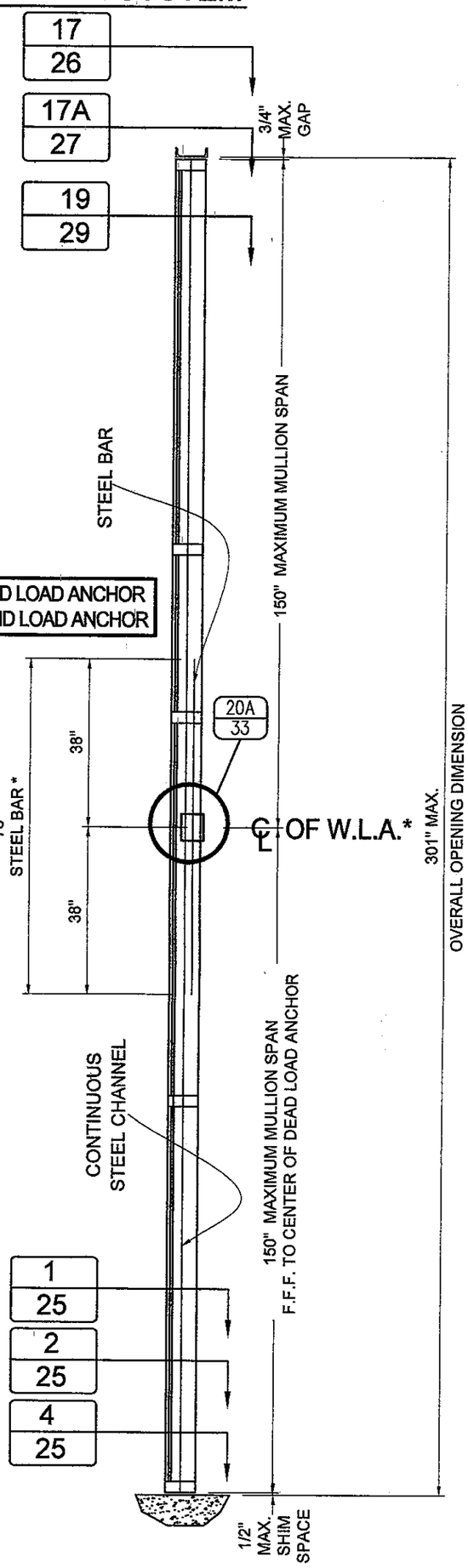

OPTION # 1
MULLION W/ SPLICE

OPTION # 2:
CONTINUOUS MULLION W/O SPLICE

* STEEL BAR NOT REQUIRED AT CORNER MULLION

PRODUCT REVISED
as complying with the Florida Building Code
Acceptance No 11-1206.08
Expiration Date DEC. 9, 2014
By Manuel Cruz
Miami Dade Product Control

MIAMI-DADE COUNTY

WALTER A. TILLIT JR. LICENSE No. 44167 STATE OF FLORIDA PROFESSIONAL ENGINEER

P.E. SEAL/SIGNATURE/DATE

FLORIDA BUILDING CODE (High Velocity Hurricane Zone)

©2011 TILTECO, INC

TILTECO INC.
TILLIT TESTING & ENGINEERING COMPANY
6355 N.W. 36th. St., Ste. 305, VIRGINIA GARDENS, FLORIDA 33166
Phone : (305)871-1530 . Fax : (305)871-1531
e-mail: tilteco@aol.com
EB-0006719
WALTER A. TILLIT Jr., P.E.
FLORIDA Lic. # 44167

HR-251 CAPTURED CURTAIN WALL SYSTEM
LARGE MISSILE IMPACT INSULATED GLASS

F.P./M.C.V./A.G.
DRAWN BY

Oldcastle BuildingEnvelope™
803 Airport Rd - Terrell, TX 75160
www.OldcastleBE.com - Phone 800-869-4567

11/17/11
DATE

11-123
DRAWING No

REV. No	DESCRIPTION	DATE	REV. No	DESCRIPTION	DATE
1	OLD 11-002	11/17/11	3	-	-
2			4	-	-

MAXIMUM A.S.D. DESIGN PRESSURE RATING FOR SINGLE SPAN (HEAD & SILL) & TWIN SPAN (SILL ONLY) MULLION CONNECTIONS (SEE ALSO SHEET 13)

SINGLE SPAN MULLION: HEAD & SILL CONNECTION *

MAXIMUM MULLION SPAN "L" (ft-in)	EFFECTIVE SPACING "b" (ft-in)	MAXIMUM A.S.D. DESIGN PRESSURE RATING (psf) POURED CONCRETE (Min. f'c = 3ksi) SUBSTRATE FASTENERS TYPES A	B	C	1/4" Min. THK ASTM A-36 STEEL SUBSTRATE FASTENERS D
8 '- 5 "	3 '- 6 "	100.0	100.0	100.0	100.0
	4 '- 0 "	100.0	100.0	100.0	100.0
	4 '- 6 "	100.0	100.0	100.0	100.0
	5 '- 0 "	100.0	100.0	100.0	100.0
	5 '- 6 "	100.0	100.0	100.0	100.0
	6 '- 0 "	100.0	100.0	100.0	100.0
8 '- 6 "	3 '- 6 "	100.0	100.0	100.0	100.0
	4 '- 0 "	100.0	100.0	100.0	100.0
	4 '- 6 "	100.0	100.0	100.0	100.0
	5 '- 0 "	100.0	100.0	100.0	100.0
	5 '- 6 "	100.0	100.0	100.0	100.0
	6 '- 0 "	100.0	100.0	100.0	100.0
9 '- 0 "	3 '- 6 "	100.0	100.0	100.0	100.0
	4 '- 0 "	100.0	100.0	100.0	100.0
	4 '- 6 "	100.0	100.0	100.0	100.0
	5 '- 0 "	100.0	100.0	100.0	100.0
	5 '- 6 "	100.0	100.0	100.0	100.0
	6 '- 0 "	100.0	100.0	100.0	100.0
9 '- 6 "	3 '- 6 "	100.0	100.0	100.0	100.0
	4 '- 0 "	100.0	100.0	100.0	100.0
	4 '- 6 "	100.0	100.0	100.0	100.0
	5 '- 0 "	100.0	100.0	100.0	100.0
	5 '- 6 "	100.0	100.0	100.0	100.0
	6 '- 0 "	100.0	100.0	97.1	100.0
10 '- 0 "	3 '- 6 "	100.0	100.0	100.0	100.0
	4 '- 0 "	100.0	100.0	100.0	100.0
	4 '- 6 "	100.0	100.0	100.0	100.0
	5 '- 0 "	100.0	100.0	100.0	100.0
	5 '- 6 "	100.0	100.0	100.0	100.0
	6 '- 0 "	100.0	100.0	92.2	100.0
10 '- 6 "	3 '- 6 "	100.0	100.0	100.0	100.0
	4 '- 0 "	100.0	100.0	100.0	100.0
	4 '- 6 "	100.0	100.0	100.0	100.0
	5 '- 0 "	100.0	100.0	100.0	100.0
	5 '- 6 "	100.0	100.0	95.8	100.0
	6 '- 0 "	100.0	100.0	87.8	100.0
11 '- 0 "	3 '- 6 "	100.0	100.0	100.0	100.0
	4 '- 0 "	100.0	100.0	100.0	100.0
	4 '- 6 "	100.0	100.0	100.0	100.0
	5 '- 0 "	100.0	100.0	100.0	100.0
	5 '- 6 "	100.0	100.0	91.5	100.0
	6 '- 0 "	100.0	100.0	83.8	99.6
11 '- 6 "	3 '- 6 "	100.0	100.0	100.0	100.0
	4 '- 0 "	100.0	100.0	100.0	100.0
	4 '- 6 "	100.0	100.0	100.0	100.0
	5 '- 0 "	100.0	100.0	96.2	100.0
	5 '- 6 "	100.0	100.0	87.5	100.0
	6 '- 0 "	100.0	100.0	80.2	95.3
12 '- 0 "	3 '- 6 "	100.0	100.0	100.0	100.0
	4 '- 0 "	100.0	100.0	100.0	100.0
	4 '- 6 "	100.0	100.0	100.0	100.0
	5 '- 0 "	100.0	100.0	92.2	100.0
	5 '- 6 "	100.0	100.0	83.8	99.6
	6 '- 0 "	97.4	96.4	76.8	91.3
12 '- 6 "	3 '- 6 "	100.0	100.0	100.0	100.0
	4 '- 0 "	100.0	100.0	100.0	100.0
	4 '- 6 "	100.0	100.0	98.4	100.0
	5 '- 0 "	100.0	100.0	88.5	100.0
	5 '- 6 "	100.0	100.0	80.5	95.7
	6 '- 0 "	93.5	92.6	73.8	87.7

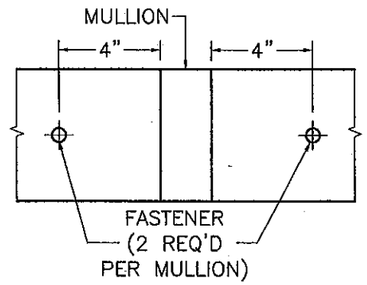

EXTERIOR

SCHEMATIC CONNECTION DETAIL *

* SEE CONNECTION DETAILS ON SHEETS 18 & 25 FOR FASTENERS QUANTITY & LOCATIONS AT MULLION.

TWIN SPAN MULLION: SILL CONNECTION *

MAXIMUM MULLION SPAN "L" (ft-in)	EFFECTIVE SPACING "b" (ft-in)	MAXIMUM A.S.D. DESIGN PRESSURE RATING (psf) POURED CONCRETE (Min. f'c = 3ksi) SUBSTRATE FASTENERS TYPES A	B	C	1/4" Min. THK ASTM A-36 STEEL SUBSTRATE FASTENERS D
8 '- 5 "	3 '- 6 "	90.0	90.0	90.0	90.0
	4 '- 0 "	90.0	90.0	90.0	90.0
	4 '- 6 "	90.0	90.0	90.0	90.0
	5 '- 0 "	90.0	90.0	90.0	90.0
	5 '- 6 "	90.0	90.0	90.0	90.0
	6 '- 0 "	90.0	90.0	90.0	90.0
8 '- 6 "	3 '- 6 "	90.0	90.0	90.0	90.0
	4 '- 0 "	90.0	90.0	90.0	90.0
	4 '- 6 "	90.0	90.0	90.0	90.0
	5 '- 0 "	90.0	90.0	90.0	90.0
	5 '- 6 "	90.0	90.0	90.0	90.0
	6 '- 0 "	90.0	90.0	90.0	90.0
9 '- 0 "	3 '- 6 "	90.0	90.0	90.0	90.0
	4 '- 0 "	90.0	90.0	90.0	90.0
	4 '- 6 "	90.0	90.0	90.0	90.0
	5 '- 0 "	90.0	90.0	90.0	90.0
	5 '- 6 "	90.0	90.0	90.0	90.0
	6 '- 0 "	90.0	90.0	90.0	90.0
9 '- 6 "	3 '- 6 "	90.0	90.0	90.0	90.0
	4 '- 0 "	90.0	90.0	90.0	90.0
	4 '- 6 "	90.0	90.0	90.0	90.0
	5 '- 0 "	90.0	90.0	90.0	90.0
	5 '- 6 "	90.0	90.0	90.0	90.0
	6 '- 0 "	90.0	90.0	90.0	90.0
10 '- 0 "	3 '- 6 "	90.0	90.0	90.0	90.0
	4 '- 0 "	90.0	90.0	90.0	90.0
	4 '- 6 "	90.0	90.0	90.0	90.0
	5 '- 0 "	90.0	90.0	90.0	90.0
	5 '- 6 "	90.0	90.0	90.0	90.0
	6 '- 0 "	90.0	90.0	90.0	90.0
10 '- 6 "	3 '- 6 "	90.0	90.0	90.0	90.0
	4 '- 0 "	90.0	90.0	90.0	90.0
	4 '- 6 "	90.0	90.0	90.0	90.0
	5 '- 0 "	90.0	90.0	90.0	90.0
	5 '- 6 "	90.0	90.0	90.0	90.0
	6 '- 0 "	90.0	90.0	87.8	90.0
11 '- 0 "	3 '- 6 "	90.0	90.0	90.0	90.0
	4 '- 0 "	90.0	90.0	90.0	90.0
	4 '- 6 "	90.0	90.0	90.0	90.0
	5 '- 0 "	90.0	90.0	90.0	90.0
	5 '- 6 "	90.0	90.0	90.0	90.0
	6 '- 0 "	90.0	90.0	83.8	90.0
11 '- 6 "	3 '- 6 "	90.0	90.0	90.0	90.0
	4 '- 0 "	90.0	90.0	90.0	90.0
	4 '- 6 "	90.0	90.0	90.0	90.0
	5 '- 0 "	90.0	90.0	90.0	90.0
	5 '- 6 "	90.0	90.0	87.5	90.0
	6 '- 0 "	90.0	90.0	80.2	90.0
12 '- 0 "	3 '- 6 "	90.0	90.0	90.0	90.0
	4 '- 0 "	90.0	90.0	90.0	90.0
	4 '- 6 "	90.0	90.0	90.0	90.0
	5 '- 0 "	90.0	90.0	90.0	90.0
	5 '- 6 "	90.0	90.0	83.8	90.0
	6 '- 0 "	90.0	90.0	76.8	90.0
12 '- 6 "	3 '- 6 "	90.0	90.0	90.0	90.0
	4 '- 0 "	90.0	90.0	90.0	90.0
	4 '- 6 "	90.0	90.0	90.0	90.0
	5 '- 0 "	90.0	90.0	88.5	90.0
	5 '- 6 "	90.0	90.0	80.5	90.0
	6 '- 0 "	90.0	90.0	73.8	87.7

B FASTENERS TYPES REQUIREMENTS

A - 1/2"Ø HILTI KWIK BOLT TZ ANCHOR W/ 3 1/4" Min. EMBEDMENT INTO 8" Min. THICK POURED CONCRETE (Min. f'c = 3 ksi) BEYOND ANY FINISH MATERIAL, W/ 6" MIN. EDGE DISTANCE.

B - 1/2"Ø HILTI KWIK BOLT TZ ANCHOR W/ 3 1/4" Min. EMBEDMENT INTO 6" Min. THICK POURED CONCRETE (Min. f'c = 3 ksi) BEYOND ANY FINISH MATERIAL, W/ 7 1/2" MIN. EDGE DISTANCE.

C - 1/2"Ø HILTI HUS-H SCREW ANCHOR W/ 3" Min. EMBEDMENT INTO 4" Min. THICK POURED CONCRETE (Min. f'c = 3 ksi) BEYOND ANY FINISH MATERIAL, W/ 3 3/4" MIN. EDGE DISTANCE.

D - 1/2"Ø-13 TYPE "F" GRADE 5 BOLT TO 1/4" MIN. THK. ASTM A-36 STEEL W/ 1" Min. EDGE DISTANCE OR 1/2"Ø -13 SAE GALVANIZED STEEL GRADE 5 HHB THRU BOLT W/ NUT & LOCK WASHER TO 1/4" Min. THK. ASTM A-36 STEEL W/ 1" MIN. EDGE DISTANCE.

FLORIDA BUILDING CODE (High Velocity Hurricane Zone)

F.P./M.C.V./A.G. DRAWN BY

11/17/11 DATE

11-123 DRAWING No

SHEET 12 OF 36

HR-251 CAPTURED CURTAIN WALL SYSTEM
LARGE MISSILE IMPACT INSULATED GLASS

Oldcastle BuildingEnvelope™
803 Airport Rd - Terrell, TX 75160
www.OldcastleBE.com - Phone 800-869-4567

REV. No	DESCRIPTION	DATE	REV. No	DESCRIPTION	DATE
1	OLD 11-002	11/17/11	3	-	-
2			4	-	-

©2011 TILTECO, INC

TILTECO INC.
TILLIT TESTING & ENGINEERING COMPANY
6355 N.W. 36th. St, Ste. 305, VIRGINIA GARDENS, FLORIDA 33166
Phone : (305)871-1530 , Fax : (305)871-1531
e-mail: tilteco@aol.com
EB-0006719
WALTER A. TILLIT Jr., P.E.
FLORIDA Lic. # 44167

WALTER A. TILLIT JR. LICENSE NO. 44167 STATE OF FLORIDA PROFESSIONAL ENGINEER

P.E. SEAL/SIGNATURE/DATE 11/23/11

PRODUCT REVISED
as complying with the Florida Building Code
Acceptance No 11-1206.08
Expiration Date DEC 27 2014
By Miami-Dade Product Control

MIAMI-DADE COUNTY

MAXIMUM A.S.D. DESIGN PRESSURE RATING FOR TWIN SPAN MULLION HEAD ANCHOR CONNECTIONS

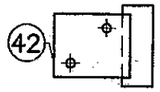

TWIN SPAN MULLION : HEAD CONNECTION *

W/ (1) 6"x 3 1/2" x 4 1/4" LONG ANCHOR #42

TYPE 1 **		MAXIMUM A.S.D. DESIGN PRESSURE RATING (psf)			
MAXIMUM MULLION SPAN	EFFECTIVE SPACING	POURED CONCRETE (Min. f'c = 3ksi) SUBSTRATE			1/4" Min. THK ASTM A-36 STEEL SUBSTRATE
		FASTENERS TYPES			FASTENERS
"L" (ft-in)	"b" (ft-in)	A	B	C	D
8 '- 5 "	3 '- 6 "	66.3	69.2	58.9	90.0
	4 '- 0 "	58.0	60.5	51.5	90.0
	4 '- 6 "	51.6	53.8	45.8	90.0
	5 '- 0 "	46.4	48.4	41.2	90.0
	5 '- 6 "	42.2	44.0	37.5	90.0
8 '- 6 "	3 '- 6 "	65.6	68.5	58.3	90.0
	4 '- 0 "	57.4	59.9	51.0	90.0
	4 '- 6 "	51.1	53.3	45.4	90.0
	5 '- 0 "	46.0	48.0	40.8	90.0
	5 '- 6 "	41.8	43.6	37.1	90.0
9 '- 0 "	3 '- 6 "	62.0	64.7	55.1	90.0
	4 '- 0 "	54.3	56.6	48.2	90.0
	4 '- 6 "	48.2	50.3	42.8	90.0
	5 '- 0 "	43.4	45.3	38.6	90.0
	5 '- 6 "	39.5	41.2	35.1	90.0
9 '- 6 "	3 '- 6 "	58.7	61.3	52.2	90.0
	4 '- 0 "	51.4	53.6	45.7	90.0
	4 '- 6 "	45.7	47.7	40.6	90.0
	5 '- 0 "	41.1	42.9	36.5	90.0
	5 '- 6 "	37.4	39.0	33.2	90.0
10 '- 0 "	3 '- 6 "	55.8	58.2	49.6	90.0
	4 '- 0 "	48.8	50.9	43.4	90.0
	4 '- 6 "	43.4	45.3	38.6	90.0
	5 '- 0 "	39.1	40.8	34.7	90.0
	5 '- 6 "	35.5	37.1	31.6	90.0
10 '- 6 "	3 '- 6 "	53.1	55.5	47.2	90.0
	4 '- 0 "	46.5	48.5	41.3	90.0
	4 '- 6 "	41.3	43.1	36.7	90.0
	5 '- 0 "	37.2	38.8	33.1	90.0
	5 '- 6 "	33.8	35.3	30.0	90.0
11 '- 0 "	3 '- 6 "	50.7	52.9	45.1	90.0
	4 '- 0 "	44.4	46.3	39.4	90.0
	4 '- 6 "	39.5	41.2	35.1	90.0
	5 '- 0 "	35.5	37.1	31.6	90.0
	5 '- 6 "	32.3	33.7	28.7	90.0
11 '- 6 "	3 '- 6 "	48.5	50.6	43.1	90.0
	4 '- 0 "	42.5	44.3	37.7	90.0
	4 '- 6 "	37.7	39.4	33.5	90.0
	5 '- 0 "	34.0	35.4	30.2	90.0
	5 '- 6 "	30.9	32.2	27.4	90.0
12 '- 0 "	3 '- 6 "	46.5	48.5	41.3	90.0
	4 '- 0 "	40.7	42.5	36.2	90.0
	4 '- 6 "	36.2	37.7	32.1	90.0
	5 '- 0 "	32.6	34.0	28.9	90.0
	5 '- 6 "	29.6	30.9	26.3	87.7
12 '- 6 "	3 '- 6 "	44.6	46.6	39.7	90.0
	4 '- 0 "	39.1	40.8	34.7	90.0
	4 '- 6 "	34.7	36.2	30.9	90.0
	5 '- 0 "	31.2	32.6	27.8	90.0
	5 '- 6 "	28.4	29.6	25.2	84.2

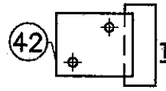

TWIN SPAN MULLION : HEAD CONNECTION *

W/ (1) 6"x 3 1/2" x 4 1/4" LONG ANCHOR #42

TYPE 2 **		MAXIMUM A.S.D. DESIGN PRESSURE RATING (psf)			
MAXIMUM MULLION SPAN	EFFECTIVE SPACING	POURED CONCRETE (Min. f'c = 3ksi) SUBSTRATE			1/4" Min. THK ASTM A-36 STEEL SUBSTRATE
		FASTENERS TYPES			FASTENERS
"L" (tt-in)	"b" (ft-in)	A	B	C	D
8 '- 5 "	3 '- 6 "	59.2	61.8	52.6	90.0
	4 '- 0 "	51.8	54.0	46.0	90.0
	4 '- 6 "	46.0	48.0	40.9	90.0
	5 '- 0 "	41.4	43.2	36.8	90.0
	5 '- 6 "	37.7	39.3	33.5	90.0
8 '- 6 "	3 '- 6 "	58.6	61.2	52.1	90.0
	4 '- 0 "	51.3	53.5	45.6	90.0
	4 '- 6 "	45.6	47.6	40.5	90.0
	5 '- 0 "	41.0	42.8	36.5	90.0
	5 '- 6 "	37.3	38.9	33.1	90.0
9 '- 0 "	3 '- 6 "	55.4	57.8	49.2	90.0
	4 '- 0 "	48.4	50.5	43.0	90.0
	4 '- 6 "	43.1	44.9	38.3	90.0
	5 '- 0 "	38.8	40.4	34.4	90.0
	5 '- 6 "	35.2	36.8	31.3	90.0
9 '- 6 "	3 '- 6 "	52.4	54.7	46.6	90.0
	4 '- 0 "	45.9	47.9	40.8	90.0
	4 '- 6 "	40.8	42.6	36.2	90.0
	5 '- 0 "	36.7	38.3	32.6	90.0
	5 '- 6 "	33.4	34.8	29.7	90.0
10 '- 0 "	3 '- 6 "	49.8	52.0	44.3	90.0
	4 '- 0 "	43.6	45.5	38.7	90.0
	4 '- 6 "	38.8	40.4	34.4	90.0
	5 '- 0 "	34.9	36.4	31.0	90.0
	5 '- 6 "	31.7	33.1	28.2	90.0
10 '- 6 "	3 '- 6 "	47.4	49.5	42.2	90.0
	4 '- 0 "	41.5	43.3	36.9	90.0
	4 '- 6 "	36.9	38.5	32.8	90.0
	5 '- 0 "	33.2	34.7	29.5	90.0
	5 '- 6 "	30.2	31.5	26.8	89.5
11 '- 0 "	3 '- 6 "	45.3	47.3	40.2	90.0
	4 '- 0 "	39.6	41.4	35.2	90.0
	4 '- 6 "	35.2	36.8	31.3	90.0
	5 '- 0 "	31.7	33.1	28.2	90.0
	5 '- 6 "	28.8	30.1	25.6	85.4
11 '- 6 "	3 '- 6 "	43.3	45.2	38.5	90.0
	4 '- 0 "	37.9	39.6	33.7	90.0
	4 '- 6 "	33.7	35.2	29.9	90.0
	5 '- 0 "	30.3	31.6	26.9	89.9
	5 '- 6 "	27.6	28.8	24.5	81.7
12 '- 0 "	3 '- 6 "	41.5	43.3	36.9	90.0
	4 '- 0 "	36.3	37.9	32.3	90.0
	4 '- 6 "	32.3	33.7	28.7	90.0
	5 '- 0 "	29.1	30.3	25.8	86.1
	5 '- 6 "	26.4	27.6	23.5	78.3
12 '- 6 "	3 '- 6 "	39.9	41.6	35.4	90.0
	4 '- 0 "	34.9	36.4	31.0	90.0
	4 '- 6 "	31.0	32.3	27.5	90.0
	5 '- 0 "	27.9	29.1	24.8	82.7
	5 '- 6 "	25.4	26.5	22.5	75.2

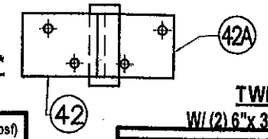

TWIN SPAN MULLION: TOP CONNECTION

W/ (2) 6"x 3 1/2" x 4 1/4" LONG ANCHORS #42 & 42A

TYPES 1 & 2 **		MAXIMUM A.S.D. DESIGN PRESSURE RATING (psf)			
MAXIMUM MULLION SPAN	EFFECTIVE SPACING	POURED CONCRETE (Min. f'c = 3ksi) SUBSTRATE			1/4" Min. THK ASTM A-36 STEEL SUBSTRATE
		FASTENERS TYPES			FASTENERS
"L" (ft-in)	"b" (ft-in)	A	B	C	D
8 '- 5 "	3 '- 6 "	90.0	90.0	90.0	90.0
	4 '- 0 "	90.0	90.0	90.0	90.0
	4 '- 6 "	90.0	90.0	90.0	90.0
	5 '- 0 "	90.0	90.0	90.0	90.0
	5 '- 6 "	90.0	90.0	90.0	90.0
8 '- 6 "	3 '- 6 "	90.0	90.0	90.0	90.0
	4 '- 0 "	90.0	90.0	90.0	90.0
	4 '- 6 "	90.0	90.0	90.0	90.0
	5 '- 0 "	90.0	90.0	90.0	90.0
	5 '- 6 "	90.0	90.0	90.0	90.0
9 '- 0 "	3 '- 6 "	90.0	90.0	90.0	90.0
	4 '- 0 "	90.0	90.0	90.0	90.0
	4 '- 6 "	90.0	90.0	90.0	90.0
	5 '- 0 "	90.0	90.0	90.0	90.0
	5 '- 6 "	90.0	90.0	90.0	90.0
9 '- 6 "	3 '- 6 "	90.0	90.0	90.0	90.0
	4 '- 0 "	90.0	90.0	90.0	90.0
	4 '- 6 "	90.0	90.0	90.0	90.0
	5 '- 0 "	90.0	90.0	90.0	90.0
	5 '- 6 "	90.0	90.0	90.0	90.0
10 '- 0 "	3 '- 6 "	90.0	90.0	90.0	90.0
	4 '- 0 "	90.0	90.0	90.0	90.0
	4 '- 6 "	90.0	90.0	90.0	90.0
	5 '- 0 "	90.0	90.0	90.0	90.0
	5 '- 6 "	90.0	90.0	90.0	90.0
10 '- 6 "	3 '- 6 "	90.0	90.0	90.0	90.0
	4 '- 0 "	90.0	90.0	90.0	90.0
	4 '- 6 "	90.0	90.0	90.0	90.0
	5 '- 0 "	90.0	90.0	90.0	90.0
	5 '- 6 "	90.0	90.0	90.0	90.0
11 '- 0 "	3 '- 6 "	90.0	90.0	90.0	90.0
	4 '- 0 "	90.0	90.0	90.0	90.0
	4 '- 6 "	90.0	90.0	90.0	90.0
	5 '- 0 "	90.0	90.0	90.0	90.0
	5 '- 6 "	90.0	90.0	90.0	90.0
11 '- 6 "	3 '- 6 "	90.0	90.0	90.0	90.0
	4 '- 0 "	90.0	90.0	90.0	90.0
	4 '- 6 "	90.0	90.0	90.0	90.0
	5 '- 0 "	90.0	90.0	90.0	90.0
	5 '- 6 "	90.0	90.0	90.0	90.0
12 '- 0 "	3 '- 6 "	90.0	90.0	90.0	90.0
	4 '- 0 "	90.0	90.0	90.0	90.0
	4 '- 6 "	90.0	90.0	90.0	90.0
	5 '- 0 "	90.0	90.0	90.0	90.0
	5 '- 6 "	90.0	90.0	90.0	90.0
12 '- 6 "	3 '- 6 "	90.0	90.0	90.0	90.0
	4 '- 0 "	90.0	90.0	90.0	90.0
	4 '- 6 "	90.0	90.0	90.0	90.0
	5 '- 0 "	90.0	90.0	90.0	90.0
	5 '- 6 "	90.0	90.0	90.0	90.0

*SEE CONNECTION DETAILS ON SHEETS 26 & 27 FOR FASTENERS QUANTITY & LOCATIONS AT MULLION. ₮

**

TYPE 1 CONNECTION:

CORRESPONDS TO CONTINUOUS TWIN SPAN MULLION INSTALLATIONS.

TYPE 2 CONNECTION:

CORRESPONDS TO SPLICED TWIN SPAN MULLION INSTALLATIONS.

B FASTENERS TYPES REQUIREMENTS

A - 1/2"Ø HILTI KWIK BOLT TZ ANCHOR W/ 3 1/4" Min. EMBEDMENT INTO 8" Min. THICK POURED CONCRETE (Min. f'c = 3 ksi) BEYOND ANY FINISH MATERIAL, W/ 6" MIN. EDGE DISTANCE.

B - 1/2"Ø HILTI KWIK BOLT TZ ANCHOR W/ 3 1/4" Min. EMBEDMENT INTO 6" Min. THICK POURED CONCRETE (Min. f'c = 3 ksi) BEYOND ANY FINISH MATERIAL, W/ 7 1/2" MIN. EDGE DISTANCE.

C - 1/2"Ø HILTI HUS-H SCREW ANCHOR W/ 3" Min. EMBEDMENT INTO 4" Min. THICK POURED CONCRETE (Min. f'c = 3 ksi) BEYOND ANY FINISH MATERIAL, W/ 3 3/4" MIN. EDGE DISTANCE.

D - 1/2"Ø-13 TYPE "F" GRADE 5 BOLT TO 1/4" MIN. THK. ASTM A-36 STEEL W/ 1" MIN. EDGE DISTANCE OR 1/2"Ø -13 SAE GALVANIZED STEEL GRADE 5 HHB THRU BOLT W/ NUT & LOCK WASHER TO 1/4" MIN. THK. ASTM A-36 STEEL W/ 1" MIN. EDGE DISTANCE.

₮ MAX. PRESSURE RATING FOR JAMB CONNECTION @ HEAD W/ ANCHOR (42) IS ± 100 psf FOR SINGLE SPAN CURTAIN WALL AND ±90 psf FOR TWIN SPAN CURTAIN WALL, VALID FOR ALL EFFECTIVE WIDTHS. SEE CONNECTION DETAILS ON SHEET 28 FOR FASTENERS QUANTITY AND LOCATION AT JAMB.

FLORIDA BUILDING CODE (High Velocity Hurricane Zone)

©2011 TILTECO, INC

HR-251 CAPTURED CURTAIN WALL SYSTEM
LARGE MISSILE IMPACT INSULATED GLASS

F.P./M.C.V./A.G. DRAWN BY | 11/17/11 DATE | 11-123 DRAWING No | SHEET 13 OF 36

Oldcastle BuildingEnvelope™
803 Airport Rd - Terrell, TX 75160
www.OldcastleBE.com - Phone 800-869-4567

REV. No	DESCRIPTION	DATE	REV. No	DESCRIPTION	DATE
1	OLD 11-002	11/17/11	3	-	-
2			4	-	-

TILTECO INC.
TILLIT TESTING & ENGINEERING COMPANY
6355 N.W. 36th. St., Ste. 305, VIRGINIA GARDENS, FLORIDA 33166
Phone : (305)871-1530 Fax : (305)871-1531
e-mail: tilteco@aol.com
EB-0006719
WALTER A. TILLIT Jr., P.E.
FLORIDA Lic. # 44167

WALTER A. TILLIT JR. LICENSE No 44167 STATE OF FLORIDA PROFESSIONAL ENGINEER

P.E. SEAL/SIGNATURE/DATE

PRODUCT REVISED
as complying with the Florida Building Code
Acceptance No 11-1208.03
Expiration Date DEC 4 2014
By Miami-Dade Product Control

MIAMI-DADE COUNTY

MAXIMUM A.S.D. DESIGN PRESSURE RATING FOR JAMBS AT SINGLE SPAN CURTAIN WALL FASTENED TO EXISTING STRUCTURE W/ 3/8"Ø FASTENERS (SEE ALSO SHEETS 15, 16 & 17)

OPTION #1 : 2 FASTENERS CONNECTION

MAXIMUM MULLION SPAN "L" (Ft-In)	EFFECTIVE SPACING b = S_5 /2 * "b" (Ft-In)	MAXIMUM A.S.D. DESIGN PRESSURE RATING (psf): POURED CONCRETE (Min. f'c = 3ksi) SUBSTRATE, FASTENER TYPES E	F	G	GROUT FILLED CONCRETE BLOCK SUBSTRATE, FASTENER TYPES H	I	1/4" Min. THK ASTM A-36 STEEL SUBSTRATE, FASTENER J
8 '- 5 "	1 '- 9 "	100.0	100.0	100.0	100.0	100.0	100.0
	2 '- 0 "	100.0	100.0	93.3	100.0	93.3	100.0
	2 '- 3 "	100.0	100.0	82.9	100.0	82.9	100.0
	2 '- 6 "	91.5	91.5	74.6	91.5	74.6	100.0
	2 '- 9 "	83.2	83.2	67.8	83.2	67.8	94.1
	3 '- 3 "	70.4	70.4	57.4	70.4	57.4	79.7
8 '- 6 "	1 '- 9 "	100.0	100.0	100.0	100.0	100.0	100.0
	2 '- 0 "	100.0	100.0	92.4	100.0	92.4	100.0
	2 '- 3 "	100.0	100.0	82.1	100.0	82.1	100.0
	2 '- 6 "	90.6	90.6	73.9	90.6	73.9	100.0
	2 '- 9 "	82.3	82.3	67.2	82.3	67.2	93.2
	3 '- 3 "	69.7	69.7	56.8	69.7	56.8	78.9
9 '- 0 "	1 '- 9 "	100.0	100.0	99.7	100.0	99.7	100.0
	2 '- 0 "	100.0	100.0	87.2	100.0	87.2	100.0
	2 '- 3 "	95.0	95.0	77.5	95.0	77.5	100.0
	2 '- 6 "	85.5	85.5	69.8	85.5	69.8	96.8
	2 '- 9 "	77.8	77.8	63.4	77.8	63.4	88.0
	3 '- 3 "	65.8	65.8	53.7	65.8	53.7	74.5
9 '- 6 "	1 '- 9 "	100.0	100.0	94.5	100.0	94.5	100.0
	2 '- 0 "	100.0	100.0	82.6	100.0	82.6	100.0
	2 '- 3 "	90.0	90.0	73.5	90.0	73.5	100.0
	2 '- 6 "	81.0	81.0	66.1	81.0	66.1	91.7
	2 '- 9 "	73.7	73.7	60.1	73.7	60.1	83.4
	3 '- 3 "	62.3	62.3	50.9	62.3	50.9	70.6
10 '- 0 "	1 '- 9 "	100.0	100.0	89.7	100.0	89.7	100.0
	2 '- 0 "	96.2	96.2	78.5	96.2	78.5	100.0
	2 '- 3 "	85.5	85.5	69.8	85.5	69.8	96.8
	2 '- 6 "	77.0	77.0	62.8	77.0	62.8	87.2
	2 '- 9 "	70.0	70.0	57.1	70.0	57.1	79.2
	3 '- 3 "	59.2	59.2	48.3	59.2	48.3	67.0
10 '- 6 "	1 '- 9 "	100.0	100.0	85.5	100.0	85.5	100.0
	2 '- 0 "	91.7	91.7	74.8	91.7	74.8	100.0
	2 '- 3 "	81.5	81.5	66.5	81.5	66.5	92.2
	2 '- 6 "	73.3	73.3	59.8	73.3	59.8	83.0
	2 '- 9 "	66.7	66.7	54.4	66.7	54.4	75.5
	3 '- 3 "	56.4	56.4	46.0	56.4	46.0	63.9
11 '- 0 "	1 '- 9 "	100.0	100.0	81.6	100.0	81.6	100.0
	2 '- 0 "	87.5	87.5	71.4	87.5	71.4	99.0
	2 '- 3 "	77.8	77.8	63.4	77.8	63.4	88.0
	2 '- 6 "	70.0	70.0	57.1	70.0	57.1	79.2
	2 '- 9 "	63.6	63.6	51.9	63.6	51.9	72.0
	3 '- 3 "	53.8	53.8	43.9	53.8	43.9	60.9
11 '- 6 "	1 '- 9 "	95.6	95.6	78.0	95.6	78.0	100.0
	2 '- 0 "	83.7	83.7	68.3	83.7	68.3	94.7
	2 '- 3 "	74.4	74.4	60.7	74.4	60.7	84.2
	2 '- 6 "	66.9	66.9	54.6	66.9	54.6	75.8
	2 '- 9 "	60.9	60.9	49.7	60.9	49.7	68.9
	3 '- 3 "	51.5	51.5	42.0	51.5	42.0	58.3
12 '- 0 "	1 '- 9 "	91.7	91.7	74.8	91.7	74.8	100.0
	2 '- 0 "	80.2	80.2	65.4	80.2	65.4	90.8
	2 '- 3 "	71.3	71.3	58.2	71.3	58.2	80.7
	2 '- 6 "	64.2	64.2	52.3	64.2	52.3	72.6
	2 '- 9 "	58.3	58.3	47.6	58.3	47.6	66.0
	3 '- 3 "	49.4	49.4	40.3	49.4	40.3	55.9
12 '- 6 "	1 '- 9 "	88.0	88.0	71.8	88.0	71.8	99.6
	2 '- 0 "	77.0	77.0	62.8	77.0	62.8	87.2
	2 '- 3 "	68.4	68.4	55.8	68.4	55.8	77.5
	2 '- 6 "	61.6	61.6	50.2	61.6	50.2	69.7
	2 '- 9 "	56.0	56.0	45.7	56.0	45.7	63.4
	3 '- 3 "	47.4	47.4	38.7	47.4	38.7	53.6

OPTION #2 : 3 FASTENERS CONNECTION

MAXIMUM MULLION SPAN "L" (Ft-In)	EFFECTIVE SPACING b = S_5 /2 * "b" (Ft-In)	MAXIMUM A.S.D. DESIGN PRESSURE RATING (psf): POURED CONCRETE (Min. f'c = 3ksi) SUBSTRATE, FASTENER TYPES E	F	G	GROUT FILLED CONCRETE BLOCK SUBSTRATE, FASTENER TYPES H	I	1/4" Min. THK ASTM A-36 STEEL SUBSTRATE, FASTENER J
8 '- 5 "	1 '- 9 "	100.0	100.0	100.0	100.0	100.0	100.0
	2 '- 0 "	100.0	100.0	100.0	100.0	100.0	100.0
	2 '- 3 "	100.0	100.0	100.0	100.0	100.0	100.0
	2 '- 6 "	100.0	100.0	100.0	100.0	100.0	100.0
	2 '- 9 "	100.0	100.0	100.0	100.0	100.0	100.0
	3 '- 3 "	100.0	100.0	86.1	100.0	86.1	100.0
8 '- 6 "	1 '- 9 "	100.0	100.0	100.0	100.0	100.0	100.0
	2 '- 0 "	100.0	100.0	100.0	100.0	100.0	100.0
	2 '- 3 "	100.0	100.0	100.0	100.0	100.0	100.0
	2 '- 6 "	100.0	100.0	100.0	100.0	100.0	100.0
	2 '- 9 "	100.0	100.0	100.0	100.0	100.0	100.0
	3 '- 3 "	100.0	100.0	85.3	100.0	85.3	100.0
9 '- 0 "	1 '- 9 "	100.0	100.0	100.0	100.0	100.0	100.0
	2 '- 0 "	100.0	100.0	100.0	100.0	100.0	100.0
	2 '- 3 "	100.0	100.0	100.0	100.0	100.0	100.0
	2 '- 6 "	100.0	100.0	100.0	100.0	100.0	100.0
	2 '- 9 "	100.0	100.0	95.2	100.0	95.2	100.0
	3 '- 3 "	98.7	98.7	80.5	98.7	80.5	100.0
9 '- 6 "	1 '- 9 "	100.0	100.0	100.0	100.0	100.0	100.0
	2 '- 0 "	100.0	100.0	100.0	100.0	100.0	100.0
	2 '- 3 "	100.0	100.0	100.0	100.0	100.0	100.0
	2 '- 6 "	100.0	100.0	99.2	100.0	99.2	100.0
	2 '- 9 "	100.0	100.0	90.2	100.0	90.2	100.0
	3 '- 3 "	93.5	93.5	76.3	93.5	76.3	100.0
10 '- 0 "	1 '- 9 "	100.0	100.0	100.0	100.0	100.0	100.0
	2 '- 0 "	100.0	100.0	100.0	100.0	100.0	100.0
	2 '- 3 "	100.0	100.0	100.0	100.0	100.0	100.0
	2 '- 6 "	100.0	100.0	94.2	100.0	94.2	100.0
	2 '- 9 "	100.0	100.0	85.7	100.0	85.7	100.0
	3 '- 3 "	88.8	88.8	72.5	88.8	72.5	100.0
10 '- 6 "	1 '- 9 "	100.0	100.0	100.0	100.0	100.0	100.0
	2 '- 0 "	100.0	100.0	100.0	100.0	100.0	100.0
	2 '- 3 "	100.0	100.0	99.7	100.0	99.7	100.0
	2 '- 6 "	100.0	100.0	89.7	100.0	89.7	100.0
	2 '- 9 "	100.0	100.0	81.6	100.0	81.6	100.0
	3 '- 3 "	84.6	84.6	69.0	84.6	69.0	95.8
11 '- 0 "	1 '- 9 "	100.0	100.0	100.0	100.0	100.0	100.0
	2 '- 0 "	100.0	100.0	100.0	100.0	100.0	100.0
	2 '- 3 "	100.0	100.0	95.2	100.0	95.2	100.0
	2 '- 6 "	100.0	100.0	85.7	100.0	85.7	100.0
	2 '- 9 "	95.4	95.4	77.9	95.4	77.9	100.0
	3 '- 3 "	80.8	80.8	65.9	80.8	65.9	91.4
11 '- 6 "	1 '- 9 "	100.0	100.0	100.0	100.0	100.0	100.0
	2 '- 0 "	100.0	100.0	100.0	100.0	100.0	100.0
	2 '- 3 "	100.0	100.0	91.0	100.0	91.0	100.0
	2 '- 6 "	100.0	100.0	81.9	100.0	81.9	100.0
	2 '- 9 "	91.3	91.3	74.5	91.3	74.5	100.0
	3 '- 3 "	77.2	77.2	63.0	77.2	63.0	87.4
12 '- 0 "	1 '- 9 "	100.0	100.0	100.0	100.0	100.0	100.0
	2 '- 0 "	100.0	100.0	98.1	100.0	98.1	100.0
	2 '- 3 "	100.0	100.0	87.2	100.0	87.2	100.0
	2 '- 6 "	96.2	96.2	78.5	96.2	78.5	100.0
	2 '- 9 "	87.5	87.5	71.4	87.5	71.4	99.0
	3 '- 3 "	74.0	74.0	60.4	74.0	60.4	83.8
12 '- 6 "	1 '- 9 "	100.0	100.0	100.0	100.0	100.0	100.0
	2 '- 0 "	100.0	100.0	94.2	100.0	94.2	100.0
	2 '- 3 "	100.0	100.0	83.7	100.0	83.7	100.0
	2 '- 6 "	92.4	92.4	75.4	92.4	75.4	100.0
	2 '- 9 "	84.0	84.0	68.5	84.0	68.5	95.1
	3 '- 3 "	71.1	71.1	58.0	71.1	58.0	80.5

OPTION #3 : 4 FASTENERS CONNECTION

MAXIMUM MULLION SPAN "L" (Ft-In)	EFFECTIVE SPACING b = S_5 /2 * "b" (Ft-In)	MAXIMUM A.S.D. DESIGN PRESSURE RATING (psf): POURED CONCRETE (Min. f'c = 3ksi) SUBSTRATE, FASTENER TYPES E	F	G	GROUT FILLED CONCRETE BLOCK SUBSTRATE, FASTENER TYPES H	I	1/4" Min. THK ASTM A-36 STEEL SUBSTRATE, FASTENER J
8 '- 5 "	1 '- 9 "	100.0	100.0	100.0	100.0	100.0	100.0
	2 '- 0 "	100.0	100.0	100.0	100.0	100.0	100.0
	2 '- 3 "	100.0	100.0	100.0	100.0	100.0	100.0
	2 '- 6 "	100.0	100.0	100.0	100.0	100.0	100.0
	2 '- 9 "	100.0	100.0	100.0	100.0	100.0	100.0
	3 '- 3 "	100.0	100.0	100.0	100.0	100.0	100.0
8 '- 6 "	1 '- 9 "	100.0	100.0	100.0	100.0	100.0	100.0
	2 '- 0 "	100.0	100.0	100.0	100.0	100.0	100.0
	2 '- 3 "	100.0	100.0	100.0	100.0	100.0	100.0
	2 '- 6 "	100.0	100.0	100.0	100.0	100.0	100.0
	2 '- 9 "	100.0	100.0	100.0	100.0	100.0	100.0
	3 '- 3 "	100.0	100.0	100.0	100.0	100.0	100.0
9 '- 0 "	1 '- 9 "	100.0	100.0	100.0	100.0	100.0	100.0
	2 '- 0 "	100.0	100.0	100.0	100.0	100.0	100.0
	2 '- 3 "	100.0	100.0	100.0	100.0	100.0	100.0
	2 '- 6 "	100.0	100.0	100.0	100.0	100.0	100.0
	2 '- 9 "	100.0	100.0	100.0	100.0	100.0	100.0
	3 '- 3 "	100.0	100.0	100.0	100.0	100.0	100.0
9 '- 6 "	1 '- 9 "	100.0	100.0	100.0	100.0	100.0	100.0
	2 '- 0 "	100.0	100.0	100.0	100.0	100.0	100.0
	2 '- 3 "	100.0	100.0	100.0	100.0	100.0	100.0
	2 '- 6 "	100.0	100.0	100.0	100.0	100.0	100.0
	2 '- 9 "	100.0	100.0	100.0	100.0	100.0	100.0
	3 '- 3 "	100.0	100.0	100.0	100.0	100.0	100.0
10 '- 0 "	1 '- 9 "	100.0	100.0	100.0	100.0	100.0	100.0
	2 '- 0 "	100.0	100.0	100.0	100.0	100.0	100.0
	2 '- 3 "	100.0	100.0	100.0	100.0	100.0	100.0
	2 '- 6 "	100.0	100.0	100.0	100.0	100.0	100.0
	2 '- 9 "	100.0	100.0	100.0	100.0	100.0	100.0
	3 '- 3 "	100.0	100.0	96.6	100.0	96.6	100.0
10 '- 6 "	1 '- 9 "	100.0	100.0	100.0	100.0	100.0	100.0
	2 '- 0 "	100.0	100.0	100.0	100.0	100.0	100.0
	2 '- 3 "	100.0	100.0	100.0	100.0	100.0	100.0
	2 '- 6 "	100.0	100.0	100.0	100.0	100.0	100.0
	2 '- 9 "	100.0	100.0	100.0	100.0	100.0	100.0
	3 '- 3 "	100.0	100.0	92.0	100.0	92.0	100.0
11 '- 0 "	1 '- 9 "	100.0	100.0	100.0	100.0	100.0	100.0
	2 '- 0 "	100.0	100.0	100.0	100.0	100.0	100.0
	2 '- 3 "	100.0	100.0	100.0	100.0	100.0	100.0
	2 '- 6 "	100.0	100.0	100.0	100.0	100.0	100.0
	2 '- 9 "	100.0	100.0	100.0	100.0	100.0	100.0
	3 '- 3 "	100.0	100.0	87.8	100.0	87.8	100.0
11 '- 6 "	1 '- 9 "	100.0	100.0	100.0	100.0	100.0	100.0
	2 '- 0 "	100.0	100.0	100.0	100.0	100.0	100.0
	2 '- 3 "	100.0	100.0	100.0	100.0	100.0	100.0
	2 '- 6 "	100.0	100.0	100.0	100.0	100.0	100.0
	2 '- 9 "	100.0	100.0	99.3	100.0	99.3	100.0
	3 '- 3 "	100.0	100.0	84.0	100.0	84.0	100.0
12 '- 0 "	1 '- 9 "	100.0	100.0	100.0	100.0	100.0	100.0
	2 '- 0 "	100.0	100.0	100.0	100.0	100.0	100.0
	2 '- 3 "	100.0	100.0	100.0	100.0	100.0	100.0
	2 '- 6 "	100.0	100.0	100.0	100.0	100.0	100.0
	2 '- 9 "	100.0	100.0	95.2	100.0	95.2	100.0
	3 '- 3 "	98.7	98.7	80.5	98.7	80.5	100.0
12 '- 6 "	1 '- 9 "	100.0	100.0	100.0	100.0	100.0	100.0
	2 '- 0 "	100.0	100.0	100.0	100.0	100.0	100.0
	2 '- 3 "	100.0	100.0	100.0	100.0	100.0	100.0
	2 '- 6 "	100.0	100.0	100.0	100.0	100.0	100.0
	2 '- 9 "	100.0	100.0	91.4	100.0	91.4	100.0
	3 '- 3 "	94.8	94.8	77.3	94.8	77.3	100.0

* SEE SHEET 9 FOR EFFECTIVE SPACING DEFINITION AT ISOMETRIC.

OPTION # 1 (ELEVATION)
(2) FASTENERS CONNECTION

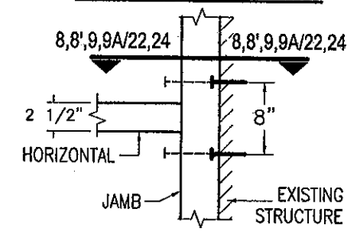

OPTION # 2 (ELEVATION)
(3) FASTENERS CONNECTION

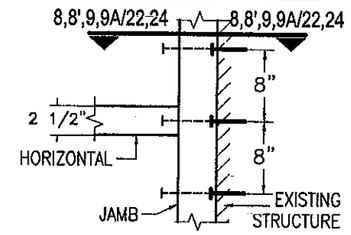

OPTION # 3 (ELEVATION)
(4) FASTENERS CONNECTION

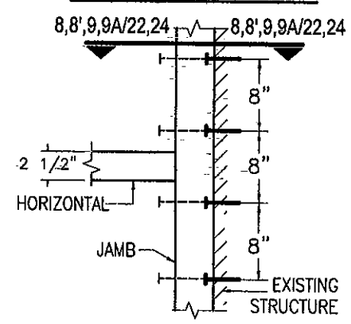

Ⓑ FASTENER TYPES REQUIREMENTS:

E - 3/8"Ø HILTI KWIK BOLT TZ ANCHOR W/ 2" Min. EMBEDMENT INTO POURED CONCRETE (Min. f'c = 3 ksi) BEYOND ANY FINISH MATERIAL, W/ 4" MIN. EDGE DISTANCE.

F - 3/8"Ø HILTI KWIK BOLT 3 ANCHOR W/ 2 1/2" Min. EMBEDMENT INTO POURED CONCRETE (Min. f'c = 3 ksi) BEYOND ANY FINISH MATERIAL, W/ 4" MIN. EDGE DISTANCE.

G - 3/8"Ø HILTI HUS-H SCREW ANCHOR W/ 2 3/4" Min. EMBEDMENT INTO POURED CONCRETE (Min. f'c = 3 ksi) BEYOND ANY FINISH MATERIAL, W/ 3 3/4" MIN. EDGE DISTANCE.

H - 3/8"Ø HILTI KWIK BOLT 3 ANCHOR W/ 3" Min. EMBEDMENT INTO GROUT FILLED CONCRETE BLOCK BEYOND ANY FINISH MATERIAL, W/ 4" MIN. EDGE DISTANCE.

I - 3/8"Ø HILTI HUS-H SCREW ANCHOR W/ 2 3/4" Min. EMBEDMENT INTO GROUT FILLED CONCRETE BLOCK BEYOND ANY FINISH MATERIAL, W/ 3 3/4" MIN. EDGE DISTANCE.

J - 3/8"Ø-13 TYPE "F" GRADE 5 BOLT TO 1/4" MIN. THK. ASTM A-36 STEEL W/ 1" MIN. EDGE DISTANCE OR 3/8"Ø-13 SAE GRADE 5, GALVANIZED STEEL BOLT W/ LOCK WASHER & NUT TO 1/4" Min. THK. ASTM A-36 STEEL & MIN. E.D. = 3/4".

FLORIDA BUILDING CODE (High Velocity Hurricane Zone)

©2011 TILTECO, INC

F.P./M.C.V./A.G. DRAWN BY
11/17/11 DATE
11-123 DRAWING No
SHEET 14 OF 36

HR-251 CAPTURED CURTAIN WALL SYSTEM
LARGE MISSILE IMPACT INSULATED GLASS

Oldcastle BuildingEnvelope™
803 Airport Rd - Terrell, TX 75160
www.OldcastleBE.com - Phone 800-869-4567

REV. No	DESCRIPTION	DATE
1	OLD 11-002	11/7/11
2	-	-
3	-	-
4	-	-

TILTECO INC.
TILLIT TESTING & ENGINEERING COMPANY
6355 N.W. 36th. St., Ste. 305, VIRGINIA GARDENS, FLORIDA 33166
Phone : (305)871-1530 . Fax : (305)871-1531
e-mail: tilteco@gol.com
EB-0006719
WALTER A. TILLIT JR., P.E.
FLORIDA Lic. # 44167

WALTER A. TILLIT JR. LICENSE No. 44167 STATE OF FLORIDA PROFESSIONAL ENGINEER
11/8/2011

P.E. SEAL/SIGNATURE/DATE

PRODUCT REVISED
as complying with the Florida Building Code
Acceptance No 11-1206.03
Expiration Date DEC. 9 2014
By Miami-Dade Product Control

MIAMI-DADE COUNTY

MAXIMUM A.S.D. DESIGN PRESSURE RATING FOR JAMBS AT TWIN SPAN CURTAIN WALL FASTENED TO EXISTING STRUCTURE W/ 3/8"Ø FASTENERS (CONTINUED)

OPTION #1 : 2 FASTENERS CONNECTION

MAXIMUM MULLION SPAN "L" (Ft-In)	EFFECTIVE SPACING b = S_5 /2 * "b" (Ft-In)	MAXIMUM A.S.D. DESIGN PRESSURE RATING (psf): POURED CONCRETE (Min. f'c = 3ksi) SUBSTRATE, FASTENER TYPES E	F	G	GROUT FILLED CONCRETE BLOCK SUBSTRATE, FASTENER TYPES H	I	1/4" Min. THK ASTM A-36 STEEL SUBSTRATE, FASTENER J
8 '- 5 "	1 '- 9 "	54.4	54.4	44.4	54.4	44.4	61.6
	2 '- 0 "	47.6	47.6	38.8	47.6	38.8	53.9
	2 '- 3 "	42.3	42.3	34.5	42.3	34.5	47.9
	2 '- 6 "	38.1	38.1	31.1	38.1	31.1	43.1
	2 '- 9 "	34.6	34.6	28.2	34.6	28.2	39.2
8 '- 6 "	1 '- 9 "	54.3	54.3	44.3	54.3	44.3	61.4
	2 '- 0 "	47.5	47.5	38.7	47.5	38.7	53.7
	2 '- 3 "	42.2	42.2	34.4	42.2	34.4	47.8
	2 '- 6 "	38.0	38.0	31.0	38.0	31.0	43.0
	2 '- 9 "	34.5	34.5	28.2	34.5	28.2	39.1
9 '- 0 "	1 '- 9 "	53.2	53.2	43.4	53.2	43.4	60.2
	2 '- 0 "	46.5	46.5	38.0	46.5	38.0	52.7
	2 '- 3 "	41.4	41.4	33.7	41.4	33.7	46.8
	2 '- 6 "	37.2	37.2	30.4	37.2	30.4	42.1
	2 '- 9 "	33.8	33.8	27.6	33.8	27.6	38.3
9 '- 6 "	1 '- 9 "	51.8	51.8	42.2	51.8	42.2	58.6
	2 '- 0 "	45.3	45.3	37.0	45.3	37.0	51.3
	2 '- 3 "	40.3	40.3	32.8	40.3	32.8	45.6
	2 '- 6 "	36.2	36.2	29.6	36.2	29.6	41.0
	2 '- 9 "	32.9	32.9	26.9	32.9	26.9	37.3
10 '- 0 "	1 '- 9 "	50.2	50.2	41.0	50.2	41.0	56.8
	2 '- 0 "	43.9	43.9	35.8	43.9	35.8	49.7
	2 '- 3 "	39.1	39.1	31.9	39.1	31.9	44.2
	2 '- 6 "	35.1	35.1	28.7	35.1	28.7	39.8
	2 '- 9 "	32.0	32.0	26.1	32.0	26.1	36.2
10 '- 6 "	1 '- 9 "	48.6	48.6	39.6	48.6	39.6	55.0
	2 '- 0 "	42.5	42.5	34.7	42.5	34.7	48.1
	2 '- 3 "	37.8	37.8	30.8	37.8	30.8	42.8
	2 '- 6 "	34.0	34.0	27.8	34.0	27.8	38.5
	2 '- 9 "	30.9	30.9	25.2	30.9	25.2	35.0
11 '- 0 "	1 '- 9 "	47.0	47.0	38.3	47.0	38.3	53.2
	2 '- 0 "	41.1	41.1	33.5	41.1	33.5	46.5
	2 '- 3 "	36.5	36.5	29.8	36.5	29.8	41.4
	2 '- 6 "	32.9	32.9	26.8	32.9	26.8	37.2
	2 '- 9 "	29.9	29.9	24.4	29.9	24.4	33.9
11 '- 6 "	1 '- 9 "	45.4	45.4	37.0	45.4	37.0	51.4
	2 '- 0 "	39.7	39.7	32.4	39.7	32.4	45.0
	2 '- 3 "	35.3	35.3	28.8	35.3	28.8	40.0
	2 '- 6 "	31.8	31.8	25.9	31.8	25.9	36.0
	2 '- 9 "	28.9	28.9	23.6	28.9	23.6	32.7
12 '- 0 "	1 '- 9 "	43.9	43.9	35.8	43.9	35.8	49.7
	2 '- 0 "	38.4	38.4	31.3	38.4	31.3	43.5
	2 '- 3 "	34.1	34.1	27.8	34.1	27.8	38.6
	2 '- 6 "	30.7	30.7	25.1	30.7	25.1	34.8
	2 '- 9 "	27.9	27.9	22.8	27.9	22.8	31.6
12 '- 6 "	1 '- 9 "	42.4	42.4	34.6	42.4	34.6	48.0
	2 '- 0 "	37.1	37.1	30.3	37.1	30.3	42.0
	2 '- 3 "	33.0	33.0	26.9	33.0	26.9	37.4
	2 '- 6 "	29.7	29.7	24.2	29.7	24.2	33.6
	2 '- 9 "	27.0	27.0	22.0	27.0	22.0	30.6

OPTION #2 : 3 FASTENERS CONNECTION

MAXIMUM MULLION SPAN "L" (Ft-In)	EFFECTIVE SPACING b = S_5 /2 * "b" (Ft-In)	MAXIMUM A.S.D. DESIGN PRESSURE RATING (psf): POURED CONCRETE (Min. f'c = 3ksi) SUBSTRATE, FASTENER TYPES E	F	G	GROUT FILLED CONCRETE BLOCK SUBSTRATE, FASTENER TYPES H	I	1/4" Min. THK ASTM A-36 STEEL SUBSTRATE, FASTENER J
8 '- 5 "	1 '- 9 "	81.6	81.6	66.5	81.6	66.5	90.0
	2 '- 0 "	71.4	71.4	58.2	71.4	58.2	80.8
	2 '- 3 "	63.4	63.4	51.8	63.4	51.8	71.8
	2 '- 6 "	57.1	57.1	46.6	57.1	46.6	64.6
	2 '- 9 "	51.9	51.9	42.3	51.9	42.3	58.8
8 '- 6 "	1 '- 9 "	81.4	81.4	66.4	81.4	66.4	90.0
	2 '- 0 "	71.2	71.2	58.1	71.2	58.1	80.6
	2 '- 3 "	63.3	63.3	51.6	63.3	51.6	71.7
	2 '- 6 "	57.0	57.0	46.5	57.0	46.5	64.5
	2 '- 9 "	51.8	51.8	42.2	51.8	42.2	58.6
9 '- 0 "	1 '- 9 "	79.8	79.8	65.1	79.8	65.1	90.0
	2 '- 0 "	69.8	69.8	56.9	69.8	56.9	79.0
	2 '- 3 "	62.0	62.0	50.6	62.0	50.6	70.2
	2 '- 6 "	55.8	55.8	45.5	55.8	45.5	63.2
	2 '- 9 "	50.8	50.8	41.4	50.8	41.4	57.5
9 '- 6 "	1 '- 9 "	77.6	77.6	63.3	77.6	63.3	87.9
	2 '- 0 "	67.9	67.9	55.4	67.9	55.4	76.9
	2 '- 3 "	60.4	60.4	49.3	60.4	49.3	68.4
	2 '- 6 "	54.4	54.4	44.3	54.4	44.3	61.5
	2 '- 9 "	49.4	49.4	40.3	49.4	40.3	55.9
10 '- 0 "	1 '- 9 "	75.3	75.3	61.4	75.3	61.4	85.3
	2 '- 0 "	65.9	65.9	53.8	65.9	53.8	74.6
	2 '- 3 "	58.6	58.6	47.8	58.6	47.8	66.3
	2 '- 6 "	52.7	52.7	43.0	52.7	43.0	59.7
	2 '- 9 "	47.9	47.9	39.1	47.9	39.1	54.3
10 '- 6 "	1 '- 9 "	72.9	72.9	59.5	72.9	59.5	82.5
	2 '- 0 "	63.8	63.8	52.0	63.8	52.0	72.2
	2 '- 3 "	56.7	56.7	46.3	56.7	46.3	64.2
	2 '- 6 "	51.0	51.0	41.6	51.0	41.6	57.8
	2 '- 9 "	46.4	46.4	37.8	46.4	37.8	52.5
11 '- 0 "	1 '- 9 "	70.5	70.5	57.5	70.5	57.5	79.8
	2 '- 0 "	61.7	61.7	50.3	61.7	50.3	69.8
	2 '- 3 "	54.8	54.8	44.7	54.8	44.7	62.1
	2 '- 6 "	49.3	49.3	40.3	49.3	40.3	55.9
	2 '- 9 "	44.9	44.9	36.6	44.9	36.6	50.8
11 '- 6 "	1 '- 9 "	68.1	68.1	55.6	68.1	55.6	77.1
	2 '- 0 "	59.6	59.6	48.6	59.6	48.6	67.5
	2 '- 3 "	53.0	53.0	43.2	53.0	43.2	60.0
	2 '- 6 "	47.7	47.7	38.9	47.7	38.9	54.0
	2 '- 9 "	43.3	43.3	35.4	43.3	35.4	49.1
12 '- 0 "	1 '- 9 "	65.8	65.8	53.7	65.8	53.7	74.5
	2 '- 0 "	57.6	57.6	47.0	57.6	47.0	65.2
	2 '- 3 "	51.2	51.2	41.8	51.2	41.8	58.0
	2 '- 6 "	46.1	46.1	37.6	46.1	37.6	52.2
	2 '- 9 "	41.9	41.9	34.2	41.9	34.2	47.4
12 '- 6 "	1 '- 9 "	63.6	63.6	51.9	63.6	51.9	72.0
	2 '- 0 "	55.7	55.7	45.4	55.7	45.4	63.0
	2 '- 3 "	49.5	49.5	40.4	49.5	40.4	56.0
	2 '- 6 "	44.5	44.5	36.3	44.5	36.3	50.4
	2 '- 9 "	40.5	40.5	33.0	40.5	33.0	45.8

OPTION #3 : 4 FASTENERS CONNECTION

MAXIMUM MULLION SPAN "L" (Ft-In)	EFFECTIVE SPACING b = S_5 /2 * "b" (Ft-In)	MAXIMUM A.S.D. DESIGN PRESSURE RATING (psf): POURED CONCRETE (Min. f'c = 3ksi) SUBSTRATE, FASTENER TYPES E	F	G	GROUT FILLED CONCRETE BLOCK SUBSTRATE, FASTENER TYPES H	I	1/4" Min. THK ASTM A-36 STEEL SUBSTRATE, FASTENER J
8 '- 5 "	1 '- 9 "	90.0	90.0	88.7	90.0	88.7	90.0
	2 '- 0 "	90.0	90.0	77.6	90.0	77.6	90.0
	2 '- 3 "	84.6	84.6	69.0	84.6	69.0	90.0
	2 '- 6 "	76.1	76.1	62.1	76.1	62.1	86.2
	2 '- 9 "	69.2	69.2	56.5	69.2	56.5	78.4
8 '- 6 "	1 '- 9 "	90.0	90.0	88.5	90.0	88.5	90.0
	2 '- 0 "	90.0	90.0	77.5	90.0	77.5	90.0
	2 '- 3 "	84.4	84.4	68.8	84.4	68.8	90.0
	2 '- 6 "	76.0	76.0	62.0	76.0	62.0	86.0
	2 '- 9 "	69.0	69.0	56.3	69.0	56.3	78.2
9 '- 0 "	1 '- 9 "	90.0	90.0	86.7	90.0	86.7	90.0
	2 '- 0 "	90.0	90.0	75.9	90.0	75.9	90.0
	2 '- 3 "	82.7	82.7	67.5	82.7	67.5	90.0
	2 '- 6 "	74.4	74.4	60.7	74.4	60.7	84.3
	2 '- 9 "	67.7	67.7	55.2	67.7	55.2	76.6
9 '- 6 "	1 '- 9 "	90.0	90.0	84.5	90.0	84.5	90.0
	2 '- 0 "	90.0	90.0	73.9	90.0	73.9	90.0
	2 '- 3 "	80.5	80.5	65.7	80.5	65.7	90.0
	2 '- 6 "	72.5	72.5	59.1	72.5	59.1	82.0
	2 '- 9 "	65.9	65.9	53.7	65.9	53.7	74.6
10 '- 0 "	1 '- 9 "	90.0	90.0	81.9	90.0	81.9	90.0
	2 '- 0 "	87.9	87.9	71.7	87.9	71.7	90.0
	2 '- 3 "	78.1	78.1	63.7	78.1	63.7	88.4
	2 '- 6 "	70.3	70.3	57.3	70.3	57.3	79.6
	2 '- 9 "	63.9	63.9	52.1	63.9	52.1	72.3
10 '- 6 "	1 '- 9 "	90.0	90.0	79.3	90.0	79.3	90.0
	2 '- 0 "	85.1	85.1	69.4	85.1	69.4	90.0
	2 '- 3 "	75.6	75.6	61.7	75.6	61.7	85.6
	2 '- 6 "	68.0	68.0	55.5	68.0	55.5	77.0
	2 '- 9 "	61.9	61.9	50.5	61.9	50.5	70.0
11 '- 0 "	1 '- 9 "	90.0	90.0	76.7	90.0	76.7	90.0
	2 '- 0 "	82.2	82.2	67.1	82.2	67.1	90.0
	2 '- 3 "	73.1	73.1	59.6	73.1	59.6	82.7
	2 '- 6 "	65.8	65.8	53.7	65.8	53.7	74.5
	2 '- 9 "	59.8	59.8	48.8	59.8	48.8	67.7
11 '- 6 "	1 '- 9 "	90.0	90.0	74.1	90.0	74.1	90.0
	2 '- 0 "	79.5	79.5	64.8	79.5	64.8	90.0
	2 '- 3 "	70.6	70.6	57.6	70.6	57.6	80.0
	2 '- 6 "	63.6	63.6	51.9	63.6	51.9	72.0
	2 '- 9 "	57.8	57.8	47.2	57.8	47.2	65.4
12 '- 0 "	1 '- 9 "	87.8	87.8	71.6	87.8	71.6	90.0
	2 '- 0 "	76.8	76.8	62.7	76.8	62.7	86.9
	2 '- 3 "	68.3	68.3	55.7	68.3	55.7	77.3
	2 '- 6 "	61.4	61.4	50.1	61.4	50.1	69.6
	2 '- 9 "	55.9	55.9	45.6	55.9	45.6	63.2
12 '- 6 "	1 '- 9 "	84.8	84.8	69.2	84.8	69.2	90.0
	2 '- 0 "	74.2	74.2	60.6	74.2	60.6	84.0
	2 '- 3 "	66.0	66.0	53.8	66.0	53.8	74.7
	2 '- 6 "	59.4	59.4	48.5	59.4	48.5	67.2
	2 '- 9 "	54.0	54.0	44.0	54.0	44.0	61.1

* SEE SHEET 10 FOR EFFECTIVE SPACING DEFINITION AT ISOMETRIC.

OPTION # 1 (ELEVATION)
(2) FASTENERS CONNECTION

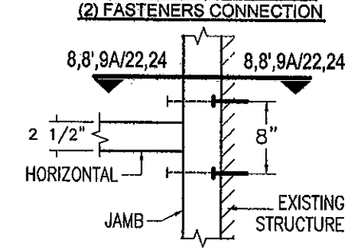

OPTION # 2 (ELEVATION)
(3) FASTENERS CONNECTION

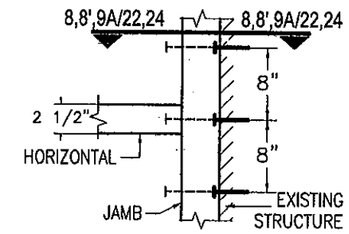

OPTION # 3 (ELEVATION)
(4) FASTENERS CONNECTION

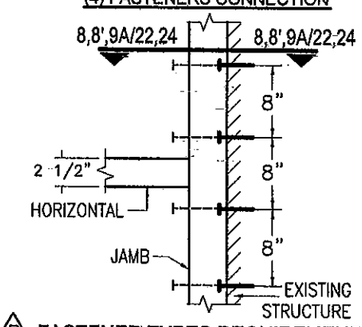

B FASTENER TYPES REQUIREMENTS:

E - 3/8"Ø HILTI KWIK BOLT TZ ANCHOR W/ 2" Min. EMBEDMENT INTO POURED CONCRETE (Min. f'c = 3 ksi) BEYOND ANY FINISH MATERIAL, W/ 4" MIN. EDGE DISTANCE.

F - 3/8"Ø HILTI KWIK BOLT 3 ANCHOR W/ 2 1/2" Min. EMBEDMENT INTO POURED CONCRETE (Min. f'c = 3 ksi) BEYOND ANY FINISH MATERIAL, W/ 4" MIN. EDGE DISTANCE.

G - 3/8"Ø HILTI HUS-H SCREW ANCHOR W/ 2 3/4" Min. EMBEDMENT INTO POURED CONCRETE (Min. f'c = 3 ksi) BEYOND ANY FINISH MATERIAL, W/ 3 3/4" MIN. EDGE DISTANCE.

H - 3/8"Ø HILTI KWIK BOLT 3 ANCHOR W/ 3" Min. EMBEDMENT INTO GROUT FILLED CONCRETE BLOCK BEYOND ANY FINISH MATERIAL, W/ 4" MIN. EDGE DISTANCE.

I - 3/8"Ø HILTI HUS-H SCREW ANCHOR W/ 2 3/4" Min. EMBEDMENT INTO GROUT FILLED CONCRETE BLOCK BEYOND ANY FINISH MATERIAL, W/ 3 3/4" MIN. EDGE DISTANCE.

J - 3/8"Ø-13 TYPE "F" GRADE 5 BOLT TO 1/4" MIN. THK. ASTM A-36 STEEL W/ 1" MIN. EDGE DISTANCE OR 3/8"Ø-13 SAE GRADE 5, GALVANIZED STEEL BOLT W/ LOCK WASHER & NUT TO 1/4" Min. THK. ASTM A-36 STEEL & MIN. E.D. = 3/4".

FLORIDA BUILDING CODE (High Velocity Hurricane Zone)

F.P./M.C.V./A.G. DRAWN BY

11/17/11 DATE

11-123 DRAWING No

SHEET 15 OF 36

HR-251 CAPTURED CURTAIN WALL SYSTEM
LARGE MISSILE IMPACT INSULATED GLASS

Oldcastle BuildingEnvelope™
803 Airport Rd - Terrell, TX 75160
www.OldcastleBE.com - Phone 800-869-4567

REV. No	DESCRIPTION	DATE
1	OLD 11-002	11/7/11
2	-	-
3	-	-
4	-	-

©2011 TILTECO, INC

TILTECO INC.
TILLIT TESTING & ENGINEERING COMPANY
6355 N.W. 36th. St. Ste. 305, VIRGINIA GARDENS, FLORIDA 33166
Phone : (305)871-1530 . Fax : (305)871-1531
e-mail: tilteco@aol.com
EB-0006719
WALTER A. TILLIT Jr., P.E.
FLORIDA Lic. # 44167

WALTER A. TILLIT JR. LICENSE No. 44167 STATE OF FLORIDA PROFESSIONAL ENGINEER

P.E. SEAL/SIGNATURE/DATE

PRODUCT REVISED
as complying with the Florida Building Code
Acceptance No 11-1206.08
Expiration Date DEC. 1, 2014
By: M. Samuel Lopez
Miami-Dade Product Control

MIAMI-DADE COUNTY

MAXIMUM A.S.D. DESIGN PRESSURE RATING FOR JAMBS AT SINGLE SPAN CURTAIN WALL FASTENED TO EXISTING STRUCTURE W/ 1/2"Ø FASTENERS (CONTINUED)

OPTION #1 : 2 FASTENERS CONNECTION

MAXIMUM MULLION SPAN	EFFECTIVE SPACING b = S_s/2 *	MAXIMUM A.S.D. DESIGN PRESSURE RATING (psf)					
		POURED CONCRETE (Min. fc = 3ksi) SUBSTRATE			GROUT FILLED CONCRETE BLOCK SUBSTRATE		1/4" Min. THK ASTM A-36 STEEL SUBSTRATE
		FASTENER TYPES			FASTENER TYPES		FASTENER
"L" (Ft-In)	"b" (Ft-In)	K	L	M	N	O	P
8'-5"	1'-9"	100.0	100.0	100.0	100.0	100.0	100.0
	2'-0"	100.0	100.0	100.0	100.0	100.0	100.0
	2'-3"	100.0	100.0	100.0	100.0	100.0	100.0
	2'-6"	100.0	100.0	100.0	100.0	90.3	100.0
	2'-9"	100.0	100.0	100.0	100.0	82.1	100.0
	3'-3"	100.0	100.0	100.0	100.0	69.5	100.0
8'-6"	1'-9"	100.0	100.0	100.0	100.0	100.0	100.0
	2'-0"	100.0	100.0	100.0	100.0	100.0	100.0
	2'-3"	100.0	100.0	100.0	100.0	99.3	100.0
	2'-6"	100.0	100.0	100.0	100.0	89.4	100.0
	2'-9"	100.0	100.0	100.0	100.0	81.3	100.0
	3'-3"	100.0	100.0	100.0	100.0	68.8	100.0
9'-0"	1'-9"	100.0	100.0	100.0	100.0	100.0	100.0
	2'-0"	100.0	100.0	100.0	100.0	100.0	100.0
	2'-3"	100.0	100.0	100.0	100.0	93.8	100.0
	2'-6"	100.0	100.0	100.0	100.0	84.4	100.0
	2'-9"	100.0	100.0	100.0	100.0	76.8	100.0
	3'-3"	100.0	100.0	100.0	100.0	65.0	100.0
9'-6"	1'-9"	100.0	100.0	100.0	100.0	100.0	100.0
	2'-0"	100.0	100.0	100.0	100.0	100.0	100.0
	2'-3"	100.0	100.0	100.0	100.0	88.9	100.0
	2'-6"	100.0	100.0	100.0	100.0	80.0	100.0
	2'-9"	100.0	100.0	100.0	100.0	72.7	100.0
	3'-3"	100.0	100.0	100.0	100.0	61.5	100.0
10'-0"	1'-9"	100.0	100.0	100.0	100.0	100.0	100.0
	2'-0"	100.0	100.0	100.0	100.0	95.0	100.0
	2'-3"	100.0	100.0	100.0	100.0	84.4	100.0
	2'-6"	100.0	100.0	100.0	100.0	76.0	100.0
	2'-9"	100.0	100.0	100.0	100.0	69.1	100.0
	3'-3"	100.0	100.0	100.0	100.0	58.5	100.0
10'-6"	1'-9"	100.0	100.0	100.0	100.0	100.0	100.0
	2'-0"	100.0	100.0	100.0	100.0	90.6	100.0
	2'-3"	100.0	100.0	100.0	100.0	80.4	100.0
	2'-6"	100.0	100.0	100.0	100.0	72.4	100.0
	2'-9"	100.0	100.0	100.0	100.0	65.8	100.0
	3'-3"	100.0	100.0	100.0	100.0	55.7	100.0
11'-0"	1'-9"	100.0	100.0	100.0	100.0	98.7	100.0
	2'-0"	100.0	100.0	100.0	100.0	86.4	100.0
	2'-3"	100.0	100.0	100.0	100.0	76.8	100.0
	2'-6"	100.0	100.0	100.0	100.0	69.1	100.0
	2'-9"	100.0	100.0	100.0	100.0	62.8	100.0
	3'-3"	100.0	100.0	100.0	100.0	53.1	100.0
11'-6"	1'-9"	100.0	100.0	100.0	100.0	94.4	100.0
	2'-0"	100.0	100.0	100.0	100.0	82.6	100.0
	2'-3"	100.0	100.0	100.0	100.0	73.4	100.0
	2'-6"	100.0	100.0	100.0	100.0	66.1	100.0
	2'-9"	100.0	100.0	100.0	100.0	60.1	100.0
	3'-3"	100.0	100.0	100.0	100.0	50.8	100.0
12'-0"	1'-9"	100.0	100.0	100.0	100.0	90.5	100.0
	2'-0"	100.0	100.0	100.0	100.0	79.2	100.0
	2'-3"	100.0	100.0	100.0	100.0	70.4	100.0
	2'-6"	100.0	100.0	100.0	100.0	63.3	100.0
	2'-9"	100.0	100.0	100.0	100.0	57.6	100.0
	3'-3"	100.0	100.0	100.0	100.0	48.7	100.0
12'-6"	1'-9"	100.0	100.0	100.0	100.0	86.9	100.0
	2'-0"	100.0	100.0	100.0	100.0	76.0	100.0
	2'-3"	100.0	100.0	100.0	100.0	67.6	100.0
	2'-6"	100.0	100.0	100.0	100.0	60.8	100.0
	2'-9"	100.0	100.0	100.0	100.0	55.3	100.0
	3'-3"	100.0	100.0	100.0	100.0	46.8	100.0

OPTION #2 : 3 FASTENERS CONNECTION

MAXIMUM MULLION SPAN	EFFECTIVE SPACING b = S_s/2 *	MAXIMUM A.S.D. DESIGN PRESSURE RATING (psf)					
		POURED CONCRETE (Min. fc = 3ksi) SUBSTRATE			GROUT FILLED CONCRETE BLOCK SUBSTRATE		1/4" Min. THK ASTM A-36 STEEL SUBSTRATE
		FASTENER TYPES			FASTENER TYPES		FASTENER
"L" (Ft-In)	"b" (Ft-In)	K	L	M	N	O	P
8'-6"	1'-9"	100.0	100.0	100.0	100.0	100.0	100.0
	2'-0"	100.0	100.0	100.0	100.0	100.0	100.0
	2'-3"	100.0	100.0	100.0	100.0	100.0	100.0
	2'-6"	100.0	100.0	100.0	100.0	100.0	100.0
	2'-9"	100.0	100.0	100.0	100.0	100.0	100.0
	3'-3"	100.0	100.0	100.0	100.0	100.0	100.0
8'-6"	1'-9"	100.0	100.0	100.0	100.0	100.0	100.0
	2'-0"	100.0	100.0	100.0	100.0	100.0	100.0
	2'-3"	100.0	100.0	100.0	100.0	100.0	100.0
	2'-6"	100.0	100.0	100.0	100.0	100.0	100.0
	2'-9"	100.0	100.0	100.0	100.0	100.0	100.0
	3'-3"	100.0	100.0	100.0	100.0	100.0	100.0
9'-0"	1'-9"	100.0	100.0	100.0	100.0	100.0	100.0
	2'-0"	100.0	100.0	100.0	100.0	100.0	100.0
	2'-3"	100.0	100.0	100.0	100.0	100.0	100.0
	2'-6"	100.0	100.0	100.0	100.0	100.0	100.0
	2'-9"	100.0	100.0	100.0	100.0	100.0	100.0
	3'-3"	100.0	100.0	100.0	100.0	97.4	100.0
9'-6"	1'-9"	100.0	100.0	100.0	100.0	100.0	100.0
	2'-0"	100.0	100.0	100.0	100.0	100.0	100.0
	2'-3"	100.0	100.0	100.0	100.0	100.0	100.0
	2'-6"	100.0	100.0	100.0	100.0	100.0	100.0
	2'-9"	100.0	100.0	100.0	100.0	100.0	100.0
	3'-3"	100.0	100.0	100.0	100.0	92.3	100.0
10'-0"	1'-9"	100.0	100.0	100.0	100.0	100.0	100.0
	2'-0"	100.0	100.0	100.0	100.0	100.0	100.0
	2'-3"	100.0	100.0	100.0	100.0	100.0	100.0
	2'-6"	100.0	100.0	100.0	100.0	100.0	100.0
	2'-9"	100.0	100.0	100.0	100.0	100.0	100.0
	3'-3"	100.0	100.0	100.0	100.0	87.7	100.0
10'-6"	1'-9"	100.0	100.0	100.0	100.0	100.0	100.0
	2'-0"	100.0	100.0	100.0	100.0	100.0	100.0
	2'-3"	100.0	100.0	100.0	100.0	100.0	100.0
	2'-6"	100.0	100.0	100.0	100.0	100.0	100.0
	2'-9"	100.0	100.0	100.0	100.0	98.7	100.0
	3'-3"	100.0	100.0	100.0	100.0	83.6	100.0
11'-0"	1'-9"	100.0	100.0	100.0	100.0	100.0	100.0
	2'-0"	100.0	100.0	100.0	100.0	100.0	100.0
	2'-3"	100.0	100.0	100.0	100.0	100.0	100.0
	2'-6"	100.0	100.0	100.0	100.0	100.0	100.0
	2'-9"	100.0	100.0	100.0	100.0	94.2	100.0
	3'-3"	100.0	100.0	100.0	100.0	79.7	100.0
11'-6"	1'-9"	100.0	100.0	100.0	100.0	100.0	100.0
	2'-0"	100.0	100.0	100.0	100.0	100.0	100.0
	2'-3"	100.0	100.0	100.0	100.0	100.0	100.0
	2'-6"	100.0	100.0	100.0	100.0	99.1	100.0
	2'-9"	100.0	100.0	100.0	100.0	90.1	100.0
	3'-3"	100.0	100.0	100.0	100.0	76.3	100.0
12'-0"	1'-9"	100.0	100.0	100.0	100.0	100.0	100.0
	2'-0"	100.0	100.0	100.0	100.0	100.0	100.0
	2'-3"	100.0	100.0	100.0	100.0	100.0	100.0
	2'-6"	100.0	100.0	100.0	100.0	95.0	100.0
	2'-9"	100.0	100.0	100.0	100.0	86.4	100.0
	3'-3"	100.0	100.0	100.0	100.0	73.1	100.0
12'-6"	1'-9"	100.0	100.0	100.0	100.0	100.0	100.0
	2'-0"	100.0	100.0	100.0	100.0	100.0	100.0
	2'-3"	100.0	100.0	100.0	100.0	100.0	100.0
	2'-6"	100.0	100.0	100.0	100.0	91.2	100.0
	2'-9"	100.0	100.0	100.0	100.0	82.9	100.0
	3'-3"	100.0	100.0	100.0	100.0	70.2	100.0

OPTION #3 : 4 FASTENERS CONNECTION

MAXIMUM MULLION SPAN	EFFECTIVE SPACING b = S_s/2 *	MAXIMUM A.S.D. DESIGN PRESSURE RATING (psf)					
		POURED CONCRETE (Min. fc = 3ksi) SUBSTRATE			GROUT FILLED CONCRETE BLOCK SUBSTRATE		1/4" Min. THK ASTM A-36 STEEL SUBSTRATE
		FASTENER TYPES			FASTENER TYPES		FASTENER
"L" (Ft-In)	"b" (Ft-In)	K	L	M	N	O	P
8'-5"	1'-9"	100.0	100.0	100.0	100.0	100.0	100.0
	2'-0"	100.0	100.0	100.0	100.0	100.0	100.0
	2'-3"	100.0	100.0	100.0	100.0	100.0	100.0
	2'-6"	100.0	100.0	100.0	100.0	100.0	100.0
	2'-9"	100.0	100.0	100.0	100.0	100.0	100.0
	3'-3"	100.0	100.0	100.0	100.0	100.0	100.0
8'-6"	1'-9"	100.0	100.0	100.0	100.0	100.0	100.0
	2'-0"	100.0	100.0	100.0	100.0	100.0	100.0
	2'-3"	100.0	100.0	100.0	100.0	100.0	100.0
	2'-6"	100.0	100.0	100.0	100.0	100.0	100.0
	2'-9"	100.0	100.0	100.0	100.0	100.0	100.0
	3'-3"	100.0	100.0	100.0	100.0	100.0	100.0
9'-0"	1'-9"	100.0	100.0	100.0	100.0	100.0	100.0
	2'-0"	100.0	100.0	100.0	100.0	100.0	100.0
	2'-3"	100.0	100.0	100.0	100.0	100.0	100.0
	2'-6"	100.0	100.0	100.0	100.0	100.0	100.0
	2'-9"	100.0	100.0	100.0	100.0	100.0	100.0
	3'-3"	100.0	100.0	100.0	100.0	100.0	100.0
9'-6"	1'-9"	100.0	100.0	100.0	100.0	100.0	100.0
	2'-0"	100.0	100.0	100.0	100.0	100.0	100.0
	2'-3"	100.0	100.0	100.0	100.0	100.0	100.0
	2'-6"	100.0	100.0	100.0	100.0	100.0	100.0
	2'-9"	100.0	100.0	100.0	100.0	100.0	100.0
	3'-3"	100.0	100.0	100.0	100.0	100.0	100.0
10'-0"	1'-9"	100.0	100.0	100.0	100.0	100.0	100.0
	2'-0"	100.0	100.0	100.0	100.0	100.0	100.0
	2'-3"	100.0	100.0	100.0	100.0	100.0	100.0
	2'-6"	100.0	100.0	100.0	100.0	100.0	100.0
	2'-9"	100.0	100.0	100.0	100.0	100.0	100.0
	3'-3"	100.0	100.0	100.0	100.0	100.0	100.0
10'-6"	1'-9"	100.0	100.0	100.0	100.0	100.0	100.0
	2'-0"	100.0	100.0	100.0	100.0	100.0	100.0
	2'-3"	100.0	100.0	100.0	100.0	100.0	100.0
	2'-6"	100.0	100.0	100.0	100.0	100.0	100.0
	2'-9"	100.0	100.0	100.0	100.0	100.0	100.0
	3'-3"	100.0	100.0	100.0	100.0	100.0	100.0
11'-0"	1'-9"	100.0	100.0	100.0	100.0	100.0	100.0
	2'-0"	100.0	100.0	100.0	100.0	100.0	100.0
	2'-3"	100.0	100.0	100.0	100.0	100.0	100.0
	2'-6"	100.0	100.0	100.0	100.0	100.0	100.0
	2'-9"	100.0	100.0	100.0	100.0	100.0	100.0
	3'-3"	100.0	100.0	100.0	100.0	100.0	100.0
11'-6"	1'-9"	100.0	100.0	100.0	100.0	100.0	100.0
	2'-0"	100.0	100.0	100.0	100.0	100.0	100.0
	2'-3"	100.0	100.0	100.0	100.0	100.0	100.0
	2'-6"	100.0	100.0	100.0	100.0	100.0	100.0
	2'-9"	100.0	100.0	100.0	100.0	100.0	100.0
	3'-3"	100.0	100.0	100.0	100.0	100.0	100.0
12'-0"	1'-9"	100.0	100.0	100.0	100.0	100.0	100.0
	2'-0"	100.0	100.0	100.0	100.0	100.0	100.0
	2'-3"	100.0	100.0	100.0	100.0	100.0	100.0
	2'-6"	100.0	100.0	100.0	100.0	100.0	100.0
	2'-9"	100.0	100.0	100.0	100.0	100.0	100.0
	3'-3"	100.0	100.0	100.0	100.0	97.4	100.0
12'-6"	1'-9"	100.0	100.0	100.0	100.0	100.0	100.0
	2'-0"	100.0	100.0	100.0	100.0	100.0	100.0
	2'-3"	100.0	100.0	100.0	100.0	100.0	100.0
	2'-6"	100.0	100.0	100.0	100.0	100.0	100.0
	2'-9"	100.0	100.0	100.0	100.0	100.0	100.0
	3'-3"	100.0	100.0	100.0	100.0	93.5	100.0

* SEE SHEET 9 FOR EFFECTIVE SPACING DEFINITION AT ISOMETRIC.

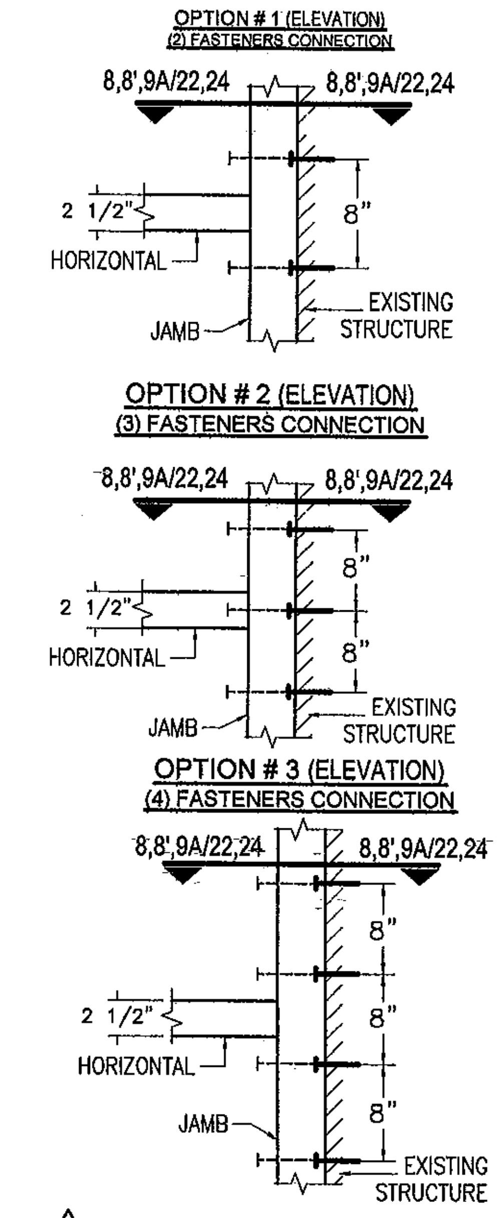

(B) FASTENER TYPES REQUIREMENTS:

K - 1/2"Ø HILTI KWIK BOLT TZ ANCHOR W/ 2" Min. EMBEDMENT INTO POURED CONCRETE (Min. f'c = 3 ksi) BEYOND ANY FINISH MATERIAL, W/ 4" MIN. EDGE DISTANCE.

L - 1/2"Ø HILTI KWIK BOLT 3 ANCHOR W/ 3 1/2" Min. EMBEDMENT INTO POURED CONCRETE (Min. f'c = 3 ksi) BEYOND ANY FINISH MATERIAL, W/ 4" MIN. EDGE DISTANCE.

M - 1/2"Ø HILTI HUS-H SCREW ANCHOR W/ 3" Min. EMBEDMENT INTO POURED CONCRETE (Min. f'c = 3 ksi) BEYOND ANY FINISH MATERIAL, W/ 4" MIN. EDGE DISTANCE.

N - 1/2"Ø HILTI KWIK BOLT 3 ANCHOR W/ 3" Min. EMBEDMENT INTO GROUT FILLED CONCRETE BLOCK BEYOND ANY FINISH MATERIAL, W/ 4" MIN. EDGE DISTANCE.

O - 1/2"Ø HILTI HUS-H SCREW ANCHOR W/ 2 3/4" Min. EMBEDMENT INTO GROUT FILLED CONCRETE BLOCK BEYOND ANY FINISH MATERIAL, W/ 3 3/4" MIN. EDGE DISTANCE.

P - 1/2"Ø-13 TYPE "F" GRADE 5 BOLT TO 1/4" MIN. THK. ASTM A-36 STEEL W/ 1" MIN. EDGE DISTANCE OR 1/2"Ø-13 SAE GRADE 5, GALVANIZED STEEL BOLT W/ LOCK WASHER & NUT TO 1/4" MIN. THK. ASTM A-36 STEEL & MIN. E.D. = 1".

FLORIDA BUILDING CODE (High Velocity Hurricane Zone)

©2011 TILTECO, INC

HR-251 CAPTURED CURTAIN WALL SYSTEM
LARGE MISSILE IMPACT INSULATED GLASS

Oldcastle BuildingEnvelope™
803 Airport Rd - Terrell, TX 75160,
www.OldcastleBE.com - Phone 800-889-4567

TILTECO INC.
TILLIT TESTING & ENGINEERING COMPANY
6355 N.W. 36th. St., Ste. 305, VIRGINIA GARDENS, FLORIDA 33166
Phone : (305)871-1530 . Fax : (305)871-1531
e-mail: tilteco@aol.com
EB-0006719
WALTER A. TILLIT Jr., P.E.
FLORIDA Lic. # 44167

F.P./M.C.V./A.G. DRAWN BY
11/17/11 DATE
11-123 DRAWING No

REV. No	DESCRIPTION	DATE	REV. No	DESCRIPTION	DATE
1	OLD 11-002	11/17/11	3	-	-
2	-	-	4	-	-

P.E. SEAL/SIGNATURE/DATE

PRODUCT REVISED as complying with the Florida Building Code
Acceptance No 11-1206.08
Expiration Date Dec 9 2014
By Manuel Perez
Miami Dade Product Control

MIAMI-DADE COUNTY

MAXIMUM A.S.D. DESIGN PRESSURE RATING FOR JAMBS AT TWIN SPAN CURTAIN WALL FASTENED TO EXISTING STRUCTURE W/ 1/2"Ø FASTENERS (CONTINUED)

OPTION #1 : 2 FASTENERS CONNECTION

MAXIMUM MULLION SPAN	EFFECTIVE SPACING b = S_5/2 *	MAXIMUM A.S.D. DESIGN PRESSURE RATING (psf)					
		POURED CONCRETE (Min. f'c = 3ksi) SUBSTRATE			GROUT FILLED CONCRETE BLOCK SUBSTRATE		1/4" Min. THK ASTM A-36 STEEL SUBSTRATE
		FASTENER TYPES			FASTENER TYPES		FASTENER
"L" (ft-in)	"b" (ft-in)	K	L	M	N	O	P
8 '- 5 "	1 '- 9 "	90.0	90.0	90.0	90.0	47.5	90.0
	2 '- 0 "	90.0	90.0	90.0	90.0	41.5	90.0
	2 '- 3 "	90.0	90.0	89.2	90.0	36.9	90.0
	2 '- 6 "	90.0	90.0	80.3	90.0	33.2	90.0
	2 '- 9 "	90.0	90.0	73.0	90.0	30.2	87.7
8 '- 6 "	1 '- 9 "	90.0	90.0	90.0	90.0	47.4	90.0
	2 '- 0 "	90.0	90.0	90.0	90.0	41.4	90.0
	2 '- 3 "	90.0	90.0	89.0	90.0	36.8	90.0
	2 '- 6 "	90.0	90.0	80.1	90.0	33.1	90.0
	2 '- 9 "	90.0	90.0	72.8	90.0	30.1	87.5
9 '- 0 "	1 '- 9 "	90.0	90.0	90.0	90.0	46.4	90.0
	2 '- 0 "	90.0	90.0	90.0	90.0	40.6	90.0
	2 '- 3 "	90.0	90.0	87.2	90.0	36.1	90.0
	2 '- 6 "	90.0	90.0	78.5	90.0	32.5	90.0
	2 '- 9 "	90.0	90.0	71.4	90.0	29.5	85.7
9 '- 6 "	1 '- 9 "	90.0	90.0	90.0	90.0	45.2	90.0
	2 '- 0 "	90.0	90.0	90.0	90.0	39.5	90.0
	2 '- 3 "	90.0	90.0	84.9	90.0	35.1	90.0
	2 '- 6 "	90.0	90.0	76.4	90.0	31.6	90.0
	2 '- 9 "	90.0	90.0	69.5	90.0	28.8	83.4
10 '- 0 "	1 '- 9 "	90.0	90.0	90.0	90.0	43.8	90.0
	2 '- 0 "	90.0	90.0	90.0	90.0	38.3	90.0
	2 '- 3 "	90.0	90.0	82.4	90.0	34.1	90.0
	2 '- 6 "	90.0	90.0	74.2	90.0	30.7	89.0
	2 '- 9 "	90.0	90.0	67.4	90.0	27.9	80.9
10 '- 6 "	1 '- 9 "	90.0	90.0	90.0	90.0	42.4	90.0
	2 '- 0 "	90.0	90.0	89.7	90.0	37.1	90.0
	2 '- 3 "	90.0	90.0	79.7	90.0	33.0	90.0
	2 '- 6 "	90.0	90.0	71.8	90.0	29.7	86.2
	2 '- 9 "	90.0	90.0	65.2	90.0	27.0	78.3
11 '- 0 "	1 '- 9 "	90.0	90.0	90.0	90.0	41.0	90.0
	2 '- 0 "	90.0	90.0	86.7	90.0	35.9	90.0
	2 '- 3 "	90.0	90.0	77.1	90.0	31.9	90.0
	2 '- 6 "	90.0	90.0	69.4	90.0	28.7	83.3
	2 '- 9 "	90.0	90.0	63.1	90.0	26.1	75.7
11 '- 6 "	1 '- 9 "	90.0	90.0	90.0	90.0	39.6	90.0
	2 '- 0 "	90.0	90.0	83.8	90.0	34.7	90.0
	2 '- 3 "	90.0	90.0	74.5	90.0	30.8	89.5
	2 '- 6 "	90.0	90.0	67.1	90.0	27.7	80.5
	2 '- 9 "	89.6	89.6	61.0	89.6	25.2	73.2
12 '- 0 "	1 '- 9 "	90.0	90.0	90.0	90.0	38.3	90.0
	2 '- 0 "	90.0	90.0	81.0	90.0	33.5	90.0
	2 '- 3 "	90.0	90.0	72.0	90.0	29.8	86.5
	2 '- 6 "	90.0	90.0	64.8	90.0	26.8	77.8
	2 '- 9 "	86.6	86.6	58.9	86.6	24.4	70.7
12 '- 6 "	1 '- 9 "	90.0	90.0	89.5	90.0	37.0	90.0
	2 '- 0 "	90.0	90.0	78.3	90.0	32.4	90.0
	2 '- 3 "	90.0	90.0	69.6	90.0	28.8	83.6
	2 '- 6 "	90.0	90.0	62.6	90.0	25.9	75.2
	2 '- 9 "	83.7	83.7	57.0	83.7	23.6	68.4

OPTION #2: 3 FASTENERS CONNECTION

MAXIMUM MULLION SPAN	EFFECTIVE SPACING b = S_5/2 *	MAXIMUM A.S.D. DESIGN PRESSURE RATING (psf)					
		POURED CONCRETE (Min. f'c = 3ksi) SUBSTRATE			GROUT FILLED CONCRETE BLOCK SUBSTRATE		1/4" Min. THK ASTM A-36 STEEL SUBSTRATE
		FASTENER TYPES			FASTENER TYPES		FASTENER
"L" (ft-in)	"b" (ft-in)	K	L	M	N	O	P
8 '- 5 "	1 '- 9 "	90.0	90.0	90.0	90.0	71.2	90.0
	2 '- 0 "	90.0	90.0	90.0	90.0	62.3	90.0
	2 '- 3 "	90.0	90.0	90.0	90.0	55.4	90.0
	2 '- 6 "	90.0	90.0	90.0	90.0	49.8	90.0
	2 '- 9 "	90.0	90.0	90.0	90.0	45.3	90.0
8 '- 6 "	1 '- 9 "	90.0	90.0	90.0	90.0	71.0	90.0
	2 '- 0 "	90.0	90.0	90.0	90.0	62.1	90.0
	2 '- 3 "	90.0	90.0	90.0	90.0	55.2	90.0
	2 '- 6 "	90.0	90.0	90.0	90.0	49.7	90.0
	2 '- 9 "	90.0	90.0	90.0	90.0	45.2	90.0
9 '- 0 "	1 '- 9 "	90.0	90.0	90.0	90.0	69.6	90.0
	2 '- 0 "	90.0	90.0	90.0	90.0	60.9	90.0
	2 '- 3 "	90.0	90.0	90.0	90.0	54.1	90.0
	2 '- 6 "	90.0	90.0	90.0	90.0	48.7	90.0
	2 '- 9 "	90.0	90.0	90.0	90.0	44.3	90.0
9 '- 6 "	1 '- 9 "	90.0	90.0	90.0	90.0	67.8	90.0
	2 '- 0 "	90.0	90.0	90.0	90.0	59.3	90.0
	2 '- 3 "	90.0	90.0	90.0	90.0	52.7	90.0
	2 '- 6 "	90.0	90.0	90.0	90.0	47.4	90.0
	2 '- 9 "	90.0	90.0	90.0	90.0	43.1	90.0
10 '- 0 "	1 '- 9 "	90.0	90.0	90.0	90.0	65.7	90.0
	2 '- 0 "	90.0	90.0	90.0	90.0	57.5	90.0
	2 '- 3 "	90.0	90.0	90.0	90.0	51.1	90.0
	2 '- 6 "	90.0	90.0	90.0	90.0	46.0	90.0
	2 '- 9 "	90.0	90.0	90.0	90.0	41.8	90.0
10 '- 6 "	1 '- 9 "	90.0	90.0	90.0	90.0	63.6	90.0
	2 '- 0 "	90.0	90.0	90.0	90.0	55.7	90.0
	2 '- 3 "	90.0	90.0	90.0	90.0	49.5	90.0
	2 '- 6 "	90.0	90.0	90.0	90.0	44.5	90.0
	2 '- 9 "	90.0	90.0	90.0	90.0	40.5	90.0
11 '- 0 "	1 '- 9 "	90.0	90.0	90.0	90.0	61.5	90.0
	2 '- 0 "	90.0	90.0	90.0	90.0	53.8	90.0
	2 '- 3 "	90.0	90.0	90.0	90.0	47.9	90.0
	2 '- 6 "	90.0	90.0	90.0	90.0	43.1	90.0
	2 '- 9 "	90.0	90.0	90.0	90.0	39.2	90.0
11 '- 6 "	1 '- 9 "	90.0	90.0	90.0	90.0	59.5	90.0
	2 '- 0 "	90.0	90.0	90.0	90.0	52.0	90.0
	2 '- 3 "	90.0	90.0	90.0	90.0	46.2	90.0
	2 '- 6 "	90.0	90.0	90.0	90.0	41.6	90.0
	2 '- 9 "	90.0	90.0	90.0	90.0	37.8	90.0
12 '- 0 "	1 '- 9 "	90.0	90.0	90.0	90.0	57.5	90.0
	2 '- 0 "	90.0	90.0	90.0	90.0	50.3	90.0
	2 '- 3 "	90.0	90.0	90.0	90.0	44.7	90.0
	2 '- 6 "	90.0	90.0	90.0	90.0	40.2	90.0
	2 '- 9 "	90.0	90.0	88.4	90.0	36.6	90.0
12 '- 6 "	1 '- 9 "	90.0	90.0	90.0	90.0	55.5	90.0
	2 '- 0 "	90.0	90.0	90.0	90.0	48.6	90.0
	2 '- 3 "	90.0	90.0	90.0	90.0	43.2	90.0
	2 '- 6 "	90.0	90.0	90.0	90.0	38.9	90.0
	2 '- 9 "	90.0	90.0	85.4	90.0	35.3	90.0

OPTION #3 : 4 FASTENERS CONNECTION

MAXIMUM MULLION SPAN	EFFECTIVE SPACING b = S_5/2 *	MAXIMUM A.S.D. DESIGN PRESSURE RATING (psf)					
		POURED CONCRETE (Min. f'c = 3ksi) SUBSTRATE			GROUT FILLED CONCRETE BLOCK SUBSTRATE		1/4" Min. THK ASTM A-36 STEEL SUBSTRATE
		FASTENER TYPES			FASTENER TYPES		FASTENER
"L" (ft-in)	"b" (ft-in)	K	L	M	N	O	P
8 '- 5 "	1 '- 9 "	90.0	90.0	90.0	90.0	90.0	90.0
	2 '- 0 "	90.0	90.0	90.0	90.0	83.1	90.0
	2 '- 3 "	90.0	90.0	90.0	90.0	73.8	90.0
	2 '- 6 "	90.0	90.0	90.0	90.0	66.5	90.0
	2 '- 9 "	90.0	90.0	90.0	90.0	60.4	90.0
8 '- 6 "	1 '- 9 "	90.0	90.0	90.0	90.0	90.0	90.0
	2 '- 0 "	90.0	90.0	90.0	90.0	82.9	90.0
	2 '- 3 "	90.0	90.0	90.0	90.0	73.7	90.0
	2 '- 6 "	90.0	90.0	90.0	90.0	66.3	90.0
	2 '- 9 "	90.0	90.0	90.0	90.0	60.3	90.0
9 '- 0 "	1 '- 9 "	90.0	90.0	90.0	90.0	90.0	90.0
	2 '- 0 "	90.0	90.0	90.0	90.0	81.2	90.0
	2 '- 3 "	90.0	90.0	90.0	90.0	72.2	90.0
	2 '- 6 "	90.0	90.0	90.0	90.0	65.0	90.0
	2 '- 9 "	90.0	90.0	90.0	90.0	59.1	90.0
9 '- 6 "	1 '- 9 "	90.0	90.0	90.0	90.0	90.0	90.0
	2 '- 0 "	90.0	90.0	90.0	90.0	79.1	90.0
	2 '- 3 "	90.0	90.0	90.0	90.0	70.3	90.0
	2 '- 6 "	90.0	90.0	90.0	90.0	63.3	90.0
	2 '- 9 "	90.0	90.0	90.0	90.0	57.5	90.0
10 '- 0 "	1 '- 9 "	90.0	90.0	90.0	90.0	87.7	90.0
	2 '- 0 "	90.0	90.0	90.0	90.0	76.7	90.0
	2 '- 3 "	90.0	90.0	90.0	90.0	68.2	90.0
	2 '- 6 "	90.0	90.0	90.0	90.0	61.4	90.0
	2 '- 9 "	90.0	90.0	90.0	90.0	55.8	90.0
10 '- 6 "	1 '- 9 "	90.0	90.0	90.0	90.0	84.8	90.0
	2 '- 0 "	90.0	90.0	90.0	90.0	74.2	90.0
	2 '- 3 "	90.0	90.0	90.0	90.0	66.0	90.0
	2 '- 6 "	90.0	90.0	90.0	90.0	59.4	90.0
	2 '- 9 "	90.0	90.0	90.0	90.0	54.0	90.0
11 '- 0 "	1 '- 9 "	90.0	90.0	90.0	90.0	82.0	90.0
	2 '- 0 "	90.0	90.0	90.0	90.0	71.8	90.0
	2 '- 3 "	90.0	90.0	90.0	90.0	63.8	90.0
	2 '- 6 "	90.0	90.0	90.0	90.0	57.4	90.0
	2 '- 9 "	90.0	90.0	90.0	90.0	52.2	90.0
11 '- 6 "	1 '- 9 "	90.0	90.0	90.0	90.0	79.3	90.0
	2 '- 0 "	90.0	90.0	90.0	90.0	69.4	90.0
	2 '- 3 "	90.0	90.0	90.0	90.0	61.7	90.0
	2 '- 6 "	90.0	90.0	90.0	90.0	55.5	90.0
	2 '- 9 "	90.0	90.0	90.0	90.0	50.4	90.0
12 '- 0 "	1 '- 9 "	90.0	90.0	90.0	90.0	76.6	90.0
	2 '- 0 "	90.0	90.0	90.0	90.0	67.0	90.0
	2 '- 3 "	90.0	90.0	90.0	90.0	59.6	90.0
	2 '- 6 "	90.0	90.0	90.0	90.0	53.6	90.0
	2 '- 9 "	90.0	90.0	90.0	90.0	48.8	90.0
12 '- 6 "	1 '- 9 "	90.0	90.0	90.0	90.0	74.1	90.0
	2 '- 0 "	90.0	90.0	90.0	90.0	64.8	90.0
	2 '- 3 "	90.0	90.0	90.0	90.0	57.6	90.0
	2 '- 6 "	90.0	90.0	90.0	90.0	51.8	90.0
	2 '- 9 "	90.0	90.0	90.0	90.0	47.1	90.0

* SEE SHEET 10 FOR EFFECTIVE SPACING DEFINITION AT ISOMETRIC.

OPTION # 1 (ELEVATION)
(2) FASTENERS CONNECTION

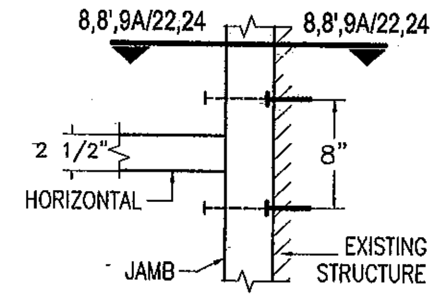

OPTION # 2 (ELEVATION)
(3) FASTENERS CONNECTION

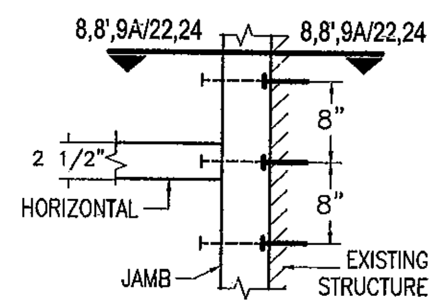

OPTION # 3 (ELEVATION)
(4) FASTENERS CONNECTION

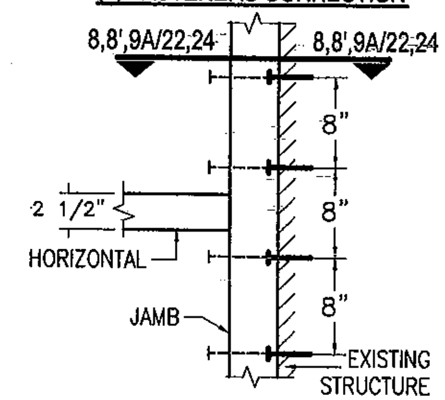

B FASTENER TYPES REQUIREMENTS:

K - 1/2"Ø HILTI KWIK BOLT TZ ANCHOR W/ 2" Min. EMBEDMENT INTO POURED CONCRETE (Min. f'c = 3 ksi) BEYOND ANY FINISH MATERIAL, W/ 4" MIN. EDGE DISTANCE.

L - 1/2"Ø HILTI KWIK BOLT 3 ANCHOR W/ 3 1/2" Min. EMBEDMENT INTO POURED CONCRETE (Min. f'c = 3 ksi) BEYOND ANY FINISH MATERIAL, W/ 4" MIN. EDGE DISTANCE.

M - 1/2"Ø HILTI HUS-H SCREW ANCHOR W/ 3" Min. EMBEDMENT INTO POURED CONCRETE (Min. f'c = 3 ksi) BEYOND ANY FINISH MATERIAL, W/ 4" MIN. EDGE DISTANCE.

N - 1/2"Ø HILTI KWIK BOLT 3 ANCHOR W/ 3" Min. EMBEDMENT INTO GROUT FILLED CONCRETE BLOCK BEYOND ANY FINISH MATERIAL, W/ 4". EDGE DISTANCE.

O - 1/2"Ø HILTI HUS-H SCREW ANCHOR W/ 3" Min. EMBEDMENT INTO GROUT FILLED CONCRETE BLOCK BEYOND ANY FINISH MATERIAL, W/ 3 3/4" MIN. EDGE DISTANCE.

P - 1/2"Ø-13 TYPE "F" GRADE 5 BOLT TO 1/4" MIN. THK. ASTM A-36 STEEL W/ 1" MIN. EDGE DISTANCE OR 1/2"Ø -13 SAE GALVANIZED STEEL GRADE 5 HHB THRU BOLT W/ NUT & LOCK WASHER TO 1/4" MIN. THK. ASTM A-36 STEEL W/ 1" MIN. EDGE DISTANCE.

FLORIDA BUILDING CODE (High Velocity Hurricane Zone)

©2011 TILTECO, INC

TILTECO INC.
TILLIT TESTING & ENGINEERING COMPANY
6355 N.W. 36th St., Ste. 305, VIRGINIA GARDENS, FLORIDA 33166
Phone: (305)871-1530 · Fax: (305)871-1531
e-mail: tilteco@aol.com
EB-0006719
WALTER A. TILLIT Jr., P.E.
FLORIDA Lic. # 44167

HR-251 CAPTURED CURTAIN WALL SYSTEM LARGE MISSILE IMPACT INSULATED GLASS

Oldcastle BuildingEnvelope™
803 Airport Rd - Terrell, TX 75160
www.OldcastleBE.com - Phone 800-869-4567

REV. No	DESCRIPTION	DATE	REV. No	DESCRIPTION	DATE
1	OLD 11-002	11/17/11	3	-	-
2			4	-	-

F.R./A.V./ECC/A.G. DRAWN BY

11/17/11 DATE

11-123 DRAWING No

SHEET 17 OF 36

WALTER A. TILLIT JR. LICENSE No. 44167 STATE OF FLORIDA PROFESSIONAL ENGINEER

P.E. SEAL/SIGNATURE/DATE

PRODUCT REVISED as complying with the Florida Building Code
Acceptance No 11-1202.08
Expiration Date Dec 4, 2014
By
Miami Dade Product Control

MIAMI-DADE COUNTY

HEAD CONNECTION DETAILS (SIDE VIEWS)

SINGLE SPAN

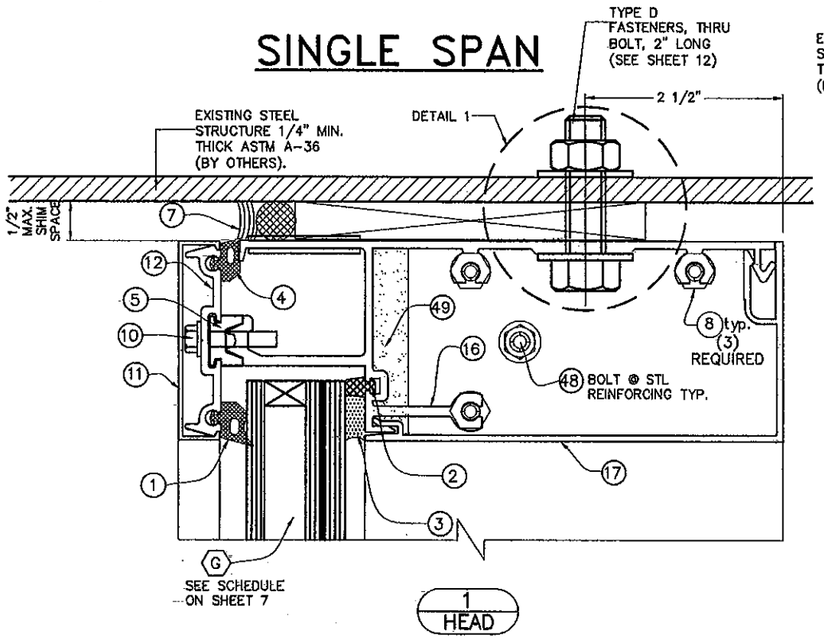

1
HEAD

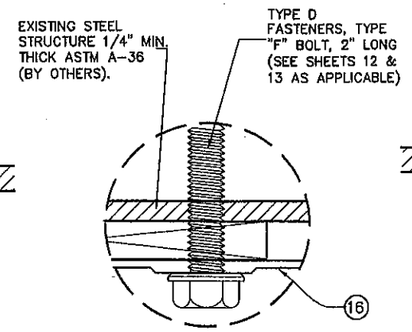

ALTERNATE FASTENER DETAIL 1

TWIN SPAN

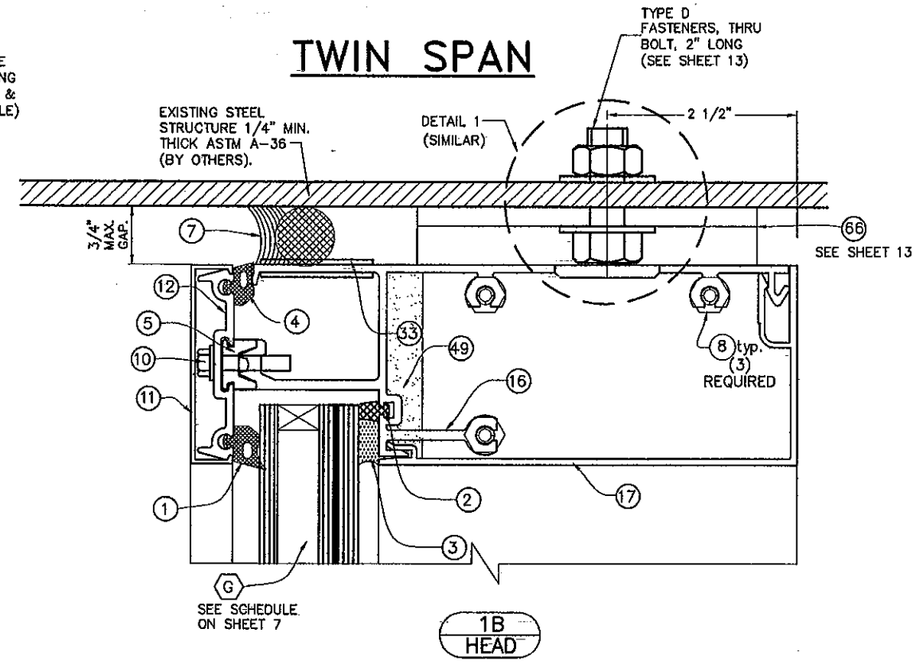

1B
HEAD

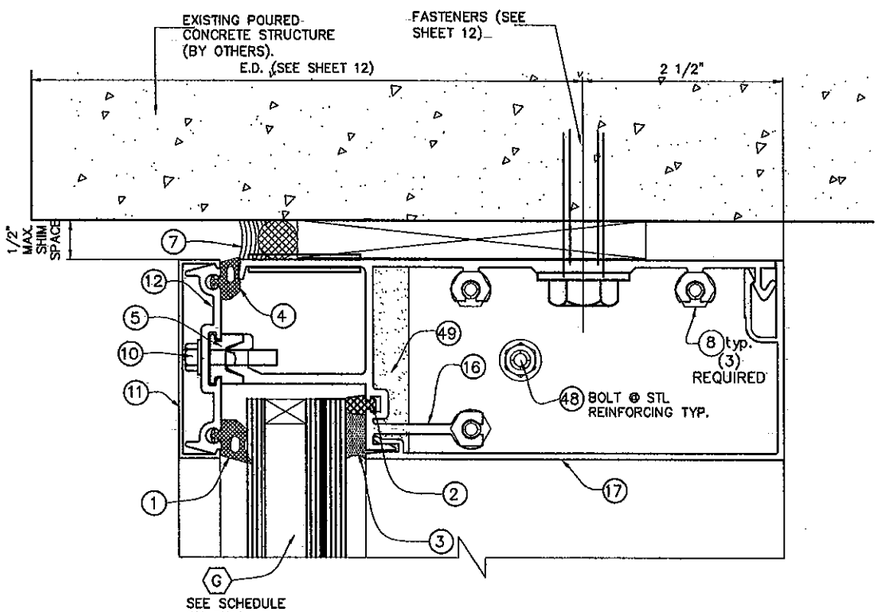

1A
HEAD

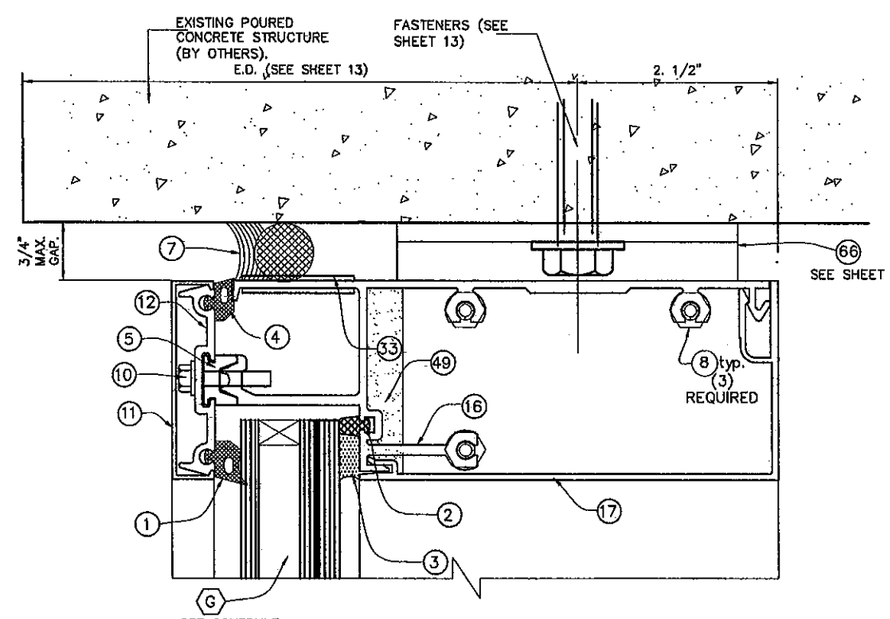

1C
HEAD

NOTE: SEE ALSO DETAILS 1, 2, 3 & 4, & 18 ON SHEETS 25 & 28 RESPECTIVELY

FLORIDA BUILDING CODE (High Velocity Hurricane Zone)

F.P./M.C.V./A.G. DRAWN BY

11/17/11 DATE

11-123 DRAWING No

SHEET 18 OF 36

HR-251 CAPTURED CURTAIN WALL SYSTEM
LARGE MISSILE IMPACT INSULATED GLASS

Oldcastle BuildingEnvelope™
803 Airport Rd - Terrell, TX 75160
www.OldcastleBE.com - Phone 800-869-4567

REV. No	DESCRIPTION	DATE	REV. No	DESCRIPTION	DATE
1	OLD 11-002	11/17/11	3	-	-
2			4	-	-

©2011 TILTECO, INC

TILTECO INC.
TILLIT TESTING & ENGINEERING COMPANY
6355 N.W. 36th. St., Ste. 305, VIRGINIA GARDENS, FLORIDA 33166
Phone : (305)871-1530 . Fax : (305)871-1531
e-mail: tilteco@aol.com
EB-0006719
WALTER A. TILLIT Jr., P.E.
FLORIDA Lic. # 44167

WALTER A. TILLIT JR. LICENSE No. 44167 STATE OF FLORIDA PROFESSIONAL ENGINEER

P.E. SEAL/SIGNATURE/DATE

PRODUCT REVISED
as complying with the Florida
Building Code
Acceptance No 11-1209.08
Expiration Date Dec. 7, 2014
By Miami Dade Product Control

MIAMI-DADE COUNTY

HORIZONTAL CONNECTION DETAILS (SIDE VIEWS)

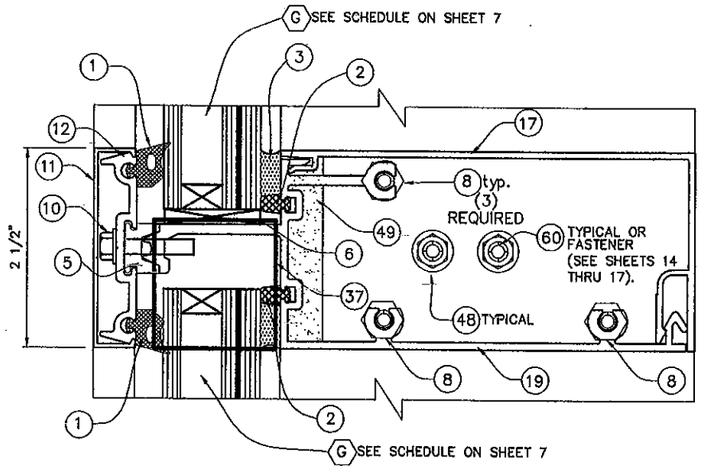

2
INT HORI

AT SINGLE OR TWIN SPAN

MAXIMUM A.S.D. DESIGN PRESSURE RATING FOR A GIVEN D.L.O., VALID FOR HORIZONTAL

D.L.O. (INCH)	MAX. A.S.D. DESIGN PRESSURE RATING (p.s.f.)
74.0 OR LESS	100.0

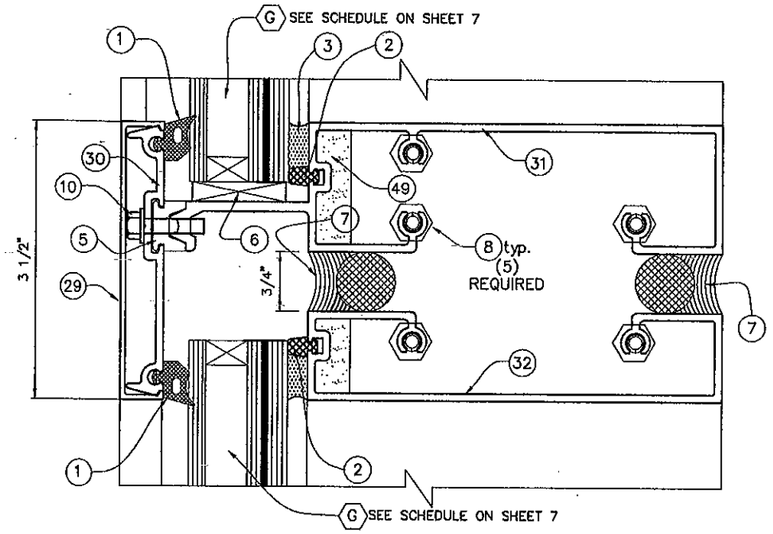

2A
INT HORI

AT TWIN SPAN ONLY
(EXPANSION HORIZONTALS)

MAXIMUM A.S.D. DESIGN PRESSURE RATING FOR A GIVEN D.L.O., VALID FOR HORIZONTAL EXPANSION

D.L.O. (INCH)	MAX. A.S.D. DESIGN PRESSURE RATING (p.s.f.)
74.0	53.5
69.5	71.0
63.5 OR LESS	90.0

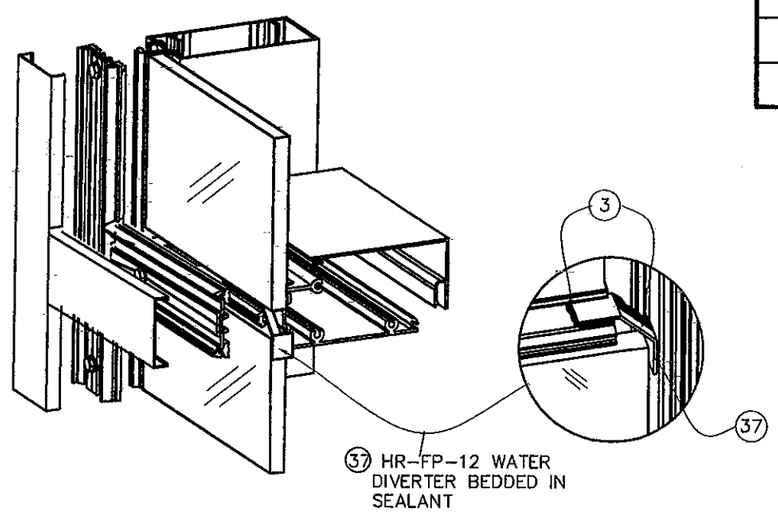

FLORIDA BUILDING CODE (High Velocity Hurricane Zone)

HR-251 CAPTURED CURTAIN WALL SYSTEM
LARGE MISSILE IMPACT INSULATED GLASS

F.P./M.C.V./A.G. DRAWN BY

11/17/11 DATE

11-123 DRAWING No

SHEET 19 OF 36

Oldcastle BuildingEnvelope™
803 Airport Rd - Terrell, TX 75160
www.OldcastleBE.com - Phone 800-869-4567

REV. No	DESCRIPTION	DATE	REV. No	DESCRIPTION	DATE
1	OLD 11-002	11/17/11	3	-	-
2			4	-	-

©2011 TILTECO, INC

TILTECO INC.
TILLIT TESTING & ENGINEERING COMPANY
6355 N.W. 36th. St. Ste. 305, VIRGINIA GARDENS, FLORIDA 33166
Phone : (305)871-1530 , Fax : (305)871-1531
e-mail: tilteco@aol.com
EB-0006719
WALTER A. TILLIT Jr., P.E.
FLORIDA Lic. # 44167

WALTER A. TILLIT JR. LICENSE No 44167 STATE OF FLORIDA PROFESSIONAL ENGINEER

P.E. SEAL/SIGNATURE/DATE

PRODUCT REVISED as complying with the Florida Building Code
Acceptance No 11-1206.03
Expiration Date DEC 9 2014
By Miami-Dade Product Control

MIAMI-DADE COUNTY

SILL CONNECTION DETAILS (SIDE VIEWS)

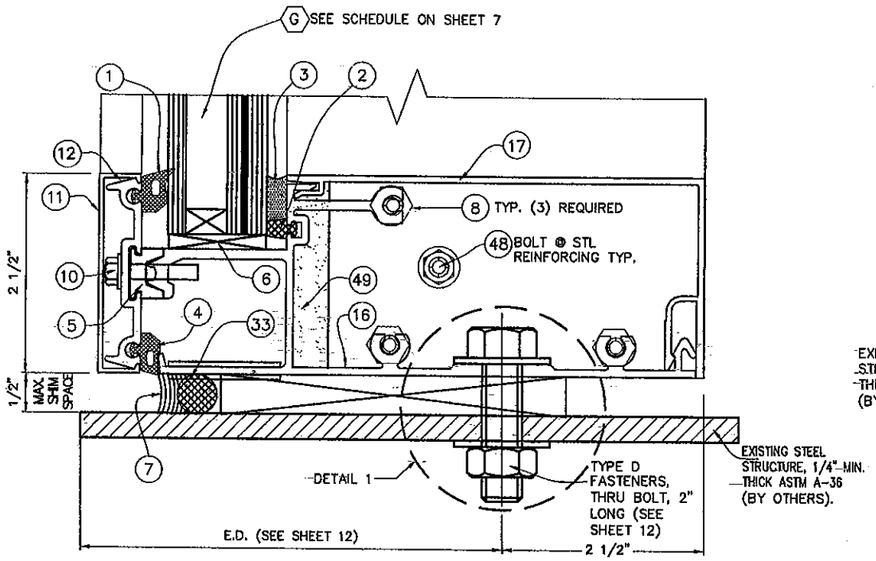

3
SILL

CONNECTION TO STEEL STRUCTURE

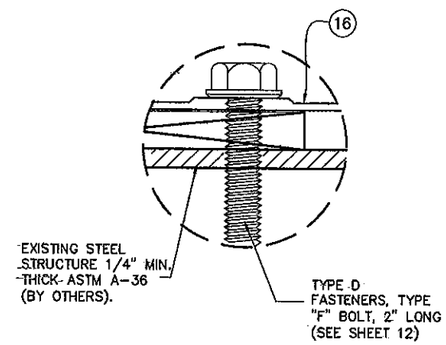

ALTERNATE FASTENER DETAIL 1

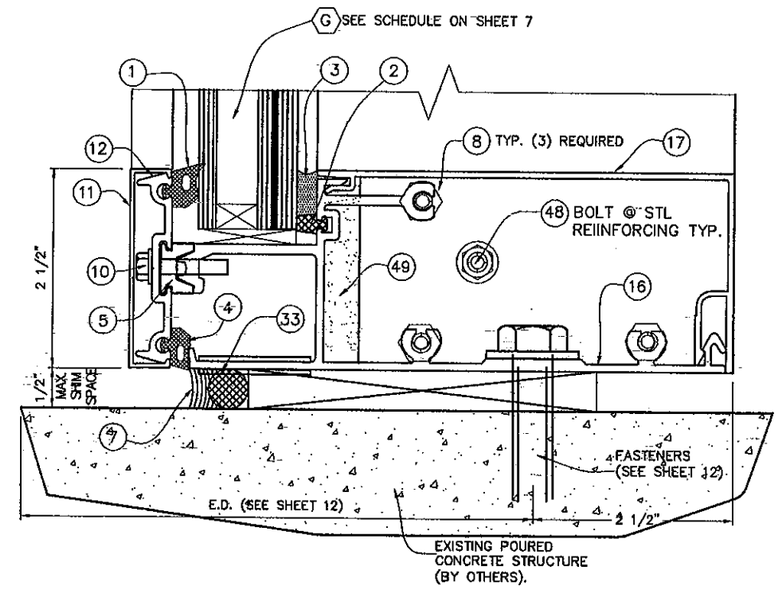

3
SILL

CONNECTION TO POURED CONCRETE STRUCTURE

NOTE: SEE ALSO DETAILS 1 THRU 4 ON SHEET 25

FLORIDA BUILDING CODE (High Velocity Hurricane Zone)

©2011 TILTECO, INC

HR-251 CAPTURED CURTAIN WALL SYSTEM
LARGE MISSILE IMPACT INSULATED GLASS

Oldcastle BuildingEnvelope™
803 Airport Rd - Terrell, TX 75160
www.OldcastleBE.com - Phone 800-869-4567

REV. No.	DESCRIPTION	DATE
1	OLD 11-002	11/17/11
2		
3	-	-
4	-	-

F.P./M.C.Y./A.G. DRAWN BY
11/17/11 DATE
11-123 DRAWING No
SHEET 20 OF 36

TILTECO INC.
TILLIT TESTING & ENGINEERING COMPANY
6355 N.W. 36th. St., Ste. 305, VIRGINIA GARDENS, FLORIDA 33166
Phone : (305)871-1530 , Fax : (305)871-1531
e-mail: tilteco@aol.com
EB-0006719
WALTER A. TILLIT JR., P.E.
FLORIDA Lic. # 44167

WALTER A. TILLIT JR. LICENSE No 44167 STATE OF FLORIDA PROFESSIONAL ENGINEER
11/15/11
P.E. SEAL/SIGNATURE/DATE

PRODUCT REVISED
as complying with the Florida Building Code
Acceptance No 11-1206.08
Expiration Date Dec. 4, 2014
By Miami-Dade Product Control

MIAMI-DADE COUNTY

HORIZONTAL SECTION @ STANDARD MULLION DETAILS (PLAN)

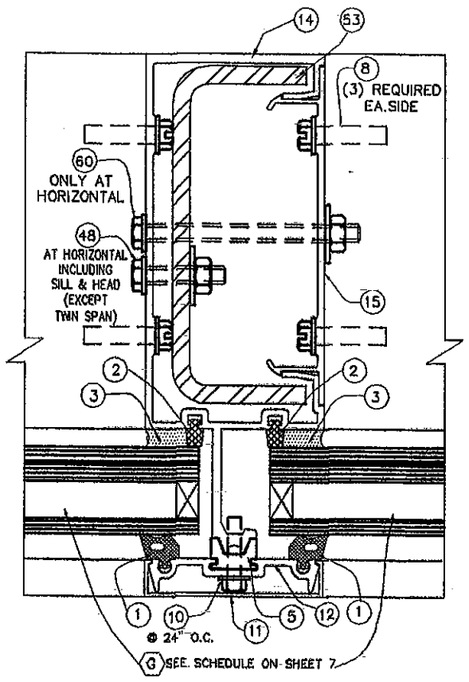

4
LIGHT MULLION W/STL

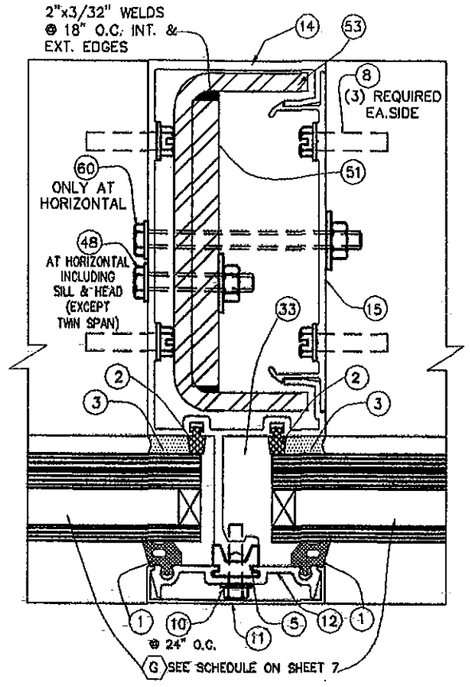

4A
LIGHT MULLION W/STL

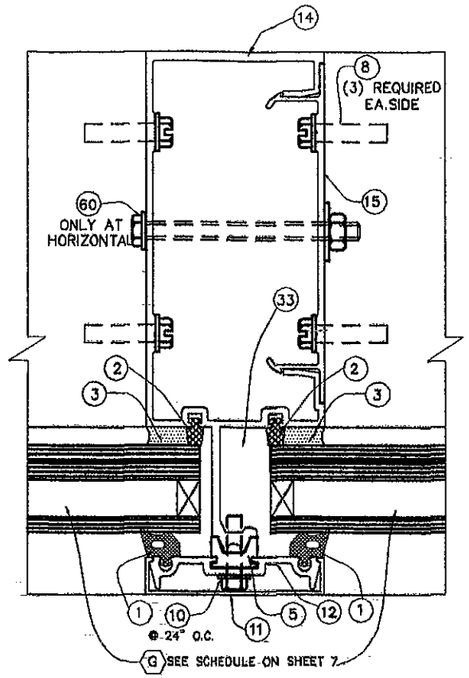

5
LIGHT MULLION W/O STL

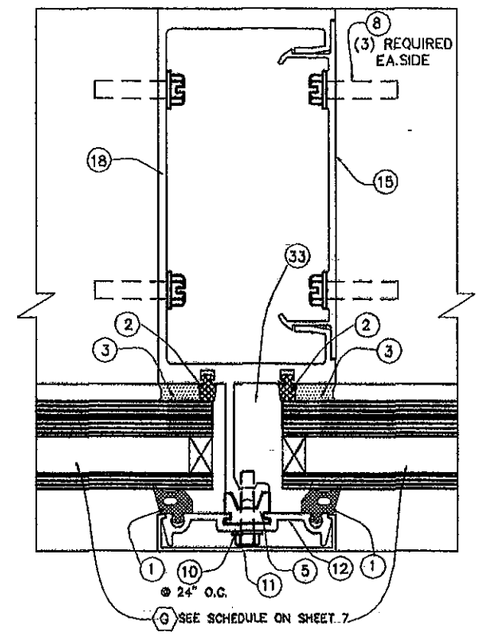

11
HEAVY MULLION

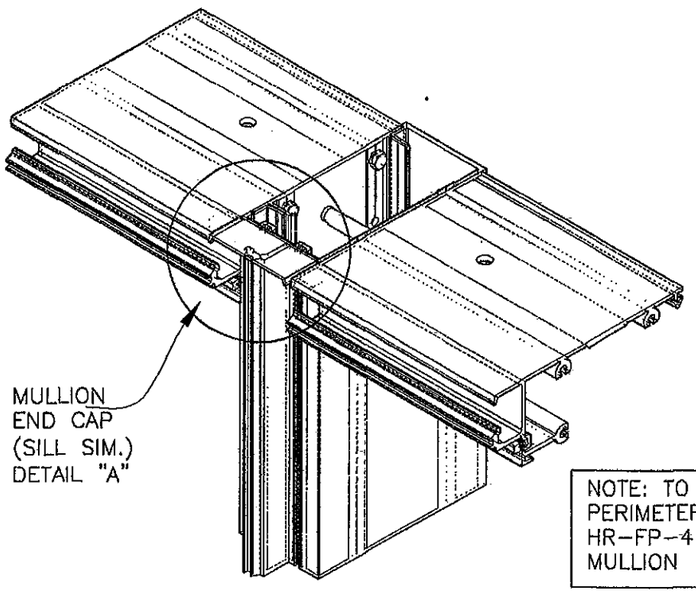

NOTE: TO ASSURE PROPER PERIMETER SEAL AT HEAD USE HR-FP-4 TO BRIDGE ACROSS MULLION

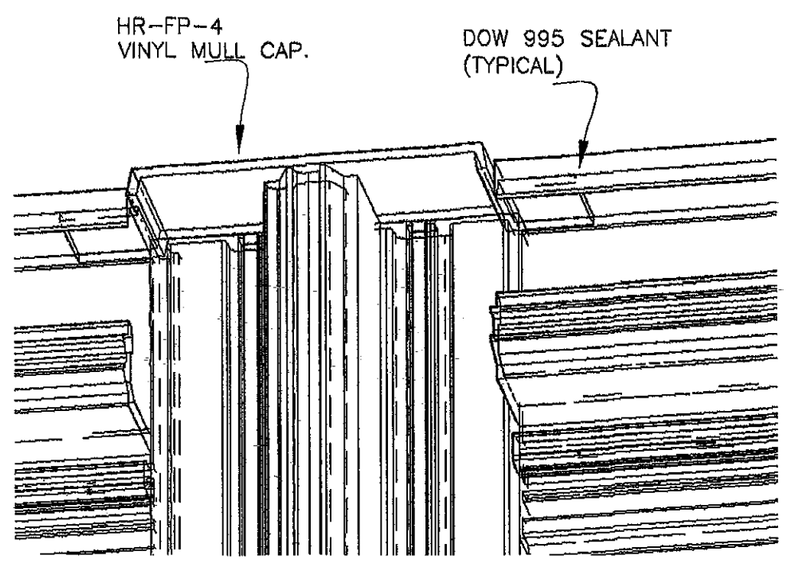

DETAIL "A"

FLORIDA BUILDING CODE (High Velocity Hurricane Zone)

F.P./M.C.Y./A.C.
DRAWN BY

11/17/11
DATE

11-123
DRAWING No

SHEET 21 OF 36

HR-251 CAPTURED CURTAIN WALL SYSTEM
LARGE MISSILE IMPACT INSULATED GLASS

Oldcastle BuildingEnvelope™
803 Airport Rd - Terrell, TX 75160
www.OldcastleBE.com - Phone 800-869-4567

REV. No	DESCRIPTION	DATE	REV. No	DESCRIPTION	DATE
1	OLD 11-022	11/7/11	3	-	-
2			4	-	-

©2011 TILLETT TESTING & ENGINEERING, INC

TILLETT TESTING & ENGINEERING COMPANY
6355 N.W. 36th. St. Ste. 385, VIRGINIA GARDENS, FLORIDA 33166
Phone : (305)871-1530 - Fax : (305)871-1531
e-mail: tilleco@bellsouth.com
EB-0006719
WALTER A. TILLIT Jr., P.E.
FLORIDA Lic. # 44157

WALTER A. TILLIT JR. LICENSE No 44157 STATE OF FLORIDA PROFESSIONAL ENGINEER

P.E. SEAL/SIGNATURE/DATE

PRODUCT REVISED
as complying with the Florida
Building Code
Acceptance No 11-1206.08
Expiration Date Dec 4 2014
By Miami-Dade Product Control

MIAMI-DADE COUNTY

JAMB CONNECTIONS AT HORIZONTALS (PLAN)

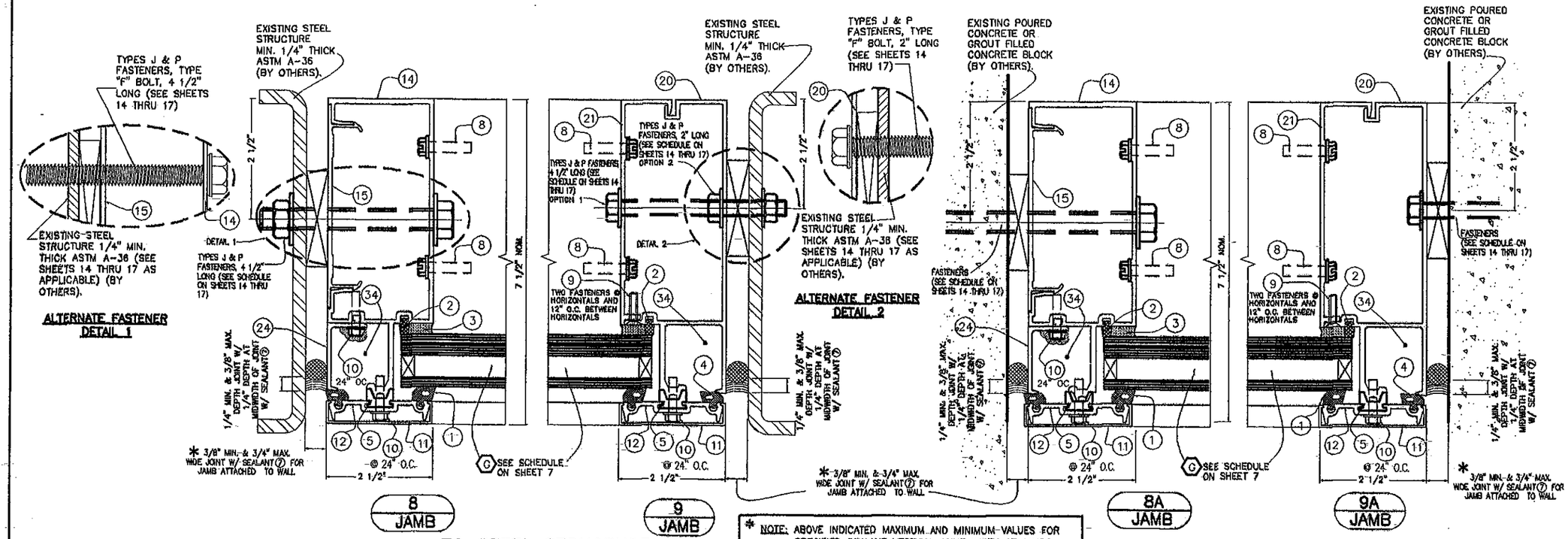

* NOTE: ABOVE INDICATED MAXIMUM AND MINIMUM VALUES FOR SPECIFIED SEALANT VERTICAL JOINT WIDTH AT JAMBS CONNECTED TO WALL HAVE BEEN DETERMINED ONLY TAKING INTO CONSIDERATION THE ACTUAL MOVEMENT OF GLASS WALL AT JAMBS DUE TO THERMAL, WIND AND ITS OWN CONSTRUCTION TOLERANCE, AND NOT PERFORMANCE FACTORS FROM THE SURROUNDING STRUCTURE.

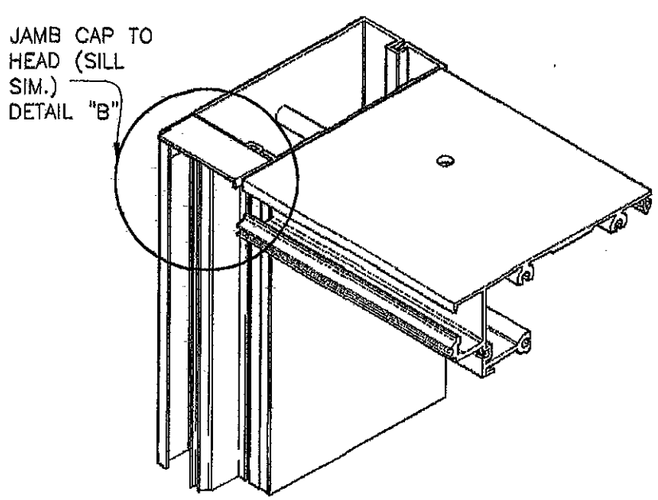

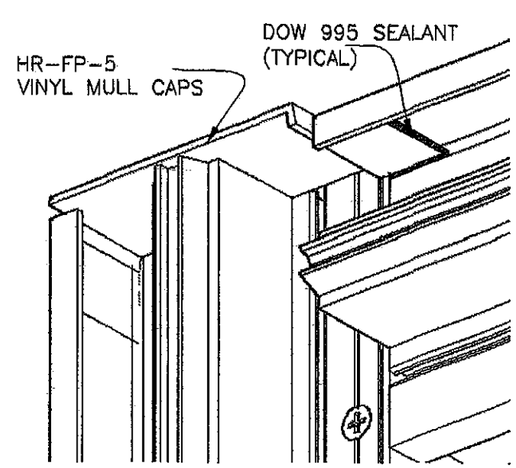

DETAIL "B"

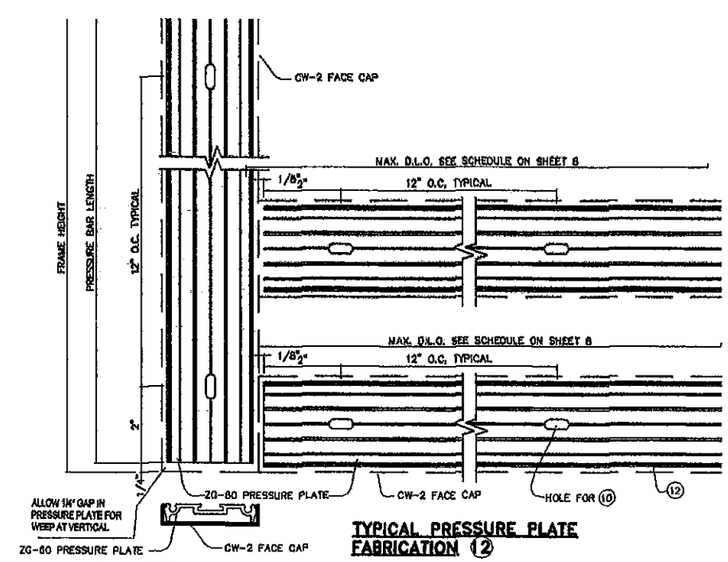

TYPICAL PRESSURE PLATE FABRICATION 12

FLORIDA BUILDING CODE (High Velocity Hurricane Zone)

F.P./M.C.V./A.G. DRAWN BY

11/17/11 DATE

11-123 DRAWING No

SHEET 22 OF 36

HR-251 CAPTURED CURTAIN WALL SYSTEM
LARGE MISSILE IMPACT INSULATED GLASS

Oldcastle BuildingEnvelope™
803 Airport Rd - Terrell, TX 75160
www.OldcastleBE.com - Phone 800-869-4567

REV. No	DESCRIPTION	DATE	REV. No	DESCRIPTION	DATE
1	ELO 11-002	11/22/11	3	-	-
2			4	-	-

©2011 TILTECO, INC

TILTECO INC.
TILLIT TESTING & ENGINEERING COMPANY
6355 N.W. 36th. St., Ste. 305, VIRGINIA GARDENS, FLORIDA 33166
Phone : (305)871-1530 . Fax : (305)871-1531
e-mail: tilteco@aol.com
EB-0006719
WALTER A. TILLIT Jr., P.E.
FLORIDA Lic. # 44167

WALTER A. TILLIT JR. LICENSE No. 44167 STATE OF FLORIDA PROFESSIONAL ENGINEER

11/23/11

P.E. SEAL/SIGNATURE/DATE

PRODUCT REVISED as complying with the Florida Building Code
Acceptance No 11-1206.08
Expiration Date Dec. 9, 2014
By Miami-Dade Product Control

MIAMI-DADE COUNTY

JAMB MULLIONS NOT ATTACHED TO EXISTING STRUCTURE FOR SINGLE SPAN ONLY (PLAN)

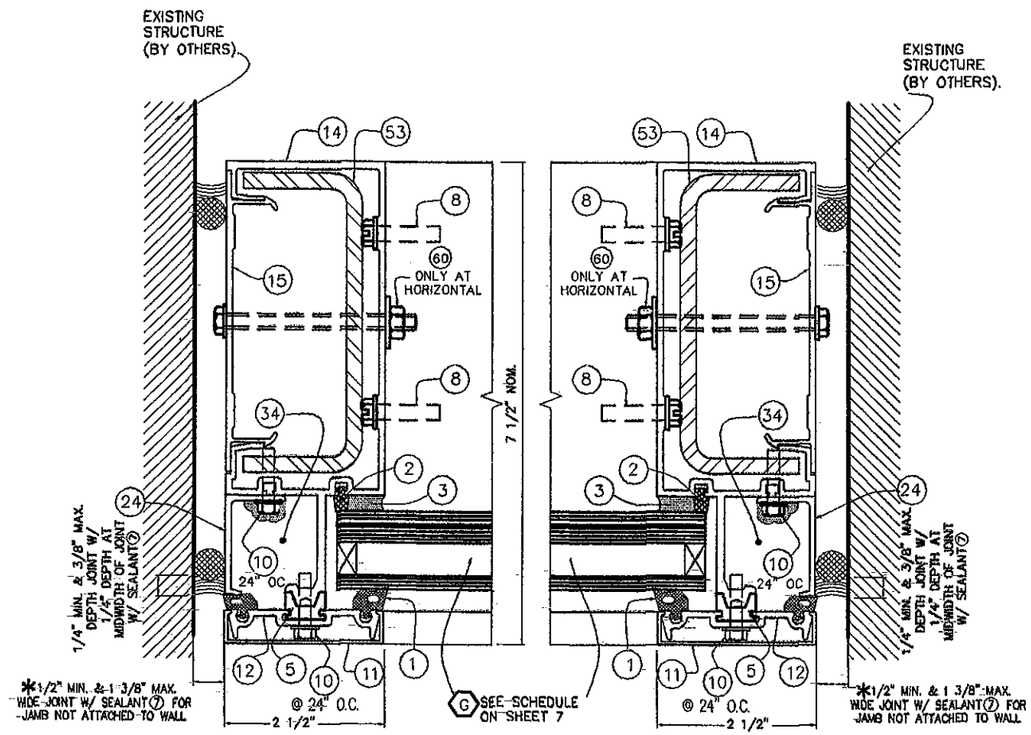

OPTION #1 OPTION #2

8B
JAMB

* NOTE: ABOVE INDICATED MAXIMUM AND MINIMUM VALUES FOR SPECIFIED SEALANT VERTICAL JOINT WIDTH AT JAMBS NOT CONNECTED TO WALL (FREE STANDING) HAVE BEEN DETERMINED ONLY TAKING INTO CONSIDERATION THE ACTUAL MOVEMENT OF GLASS WALL AT JAMBS DUE TO THERMAL, WIND AND ITS OWN CONSTRUCTION TOLERANCE, AND NOT PERFORMANCE FACTORS FROM THE SURROUNDING STRUCTURE.

HR-251 SINGLE SPAN JAMB MULLION W/O ANCHORAGE

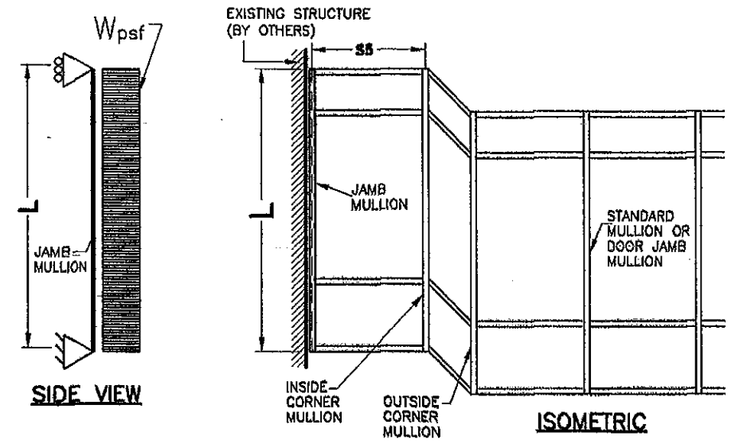

L = SINGLE SPAN JAMB MULLION; S5 = WIDTH OF JAMB MULLION GLASS PANEL

EFFECTIVE SPACING $b = \frac{S_5}{2}$ (SEE SCHEDULE)

MAXIMUM A.S.D. DESIGN PRESSURE RATING FOR SINGLE SPAN JAMB MULLIONS W/O ANCHORAGE TO STRUCTURE

MAXIMUM SINGLE SPAN JAMB MULLION "L"(ft) SCHEDULE
FOR A GIVEN A.S.D. DESIGN PRESSURE RATING (psf)
AND A GIVEN EFFECTIVE SPACING "b" (ft-in)

MAXIMUM A.S.D. DESIGN PRESSURE RATING (psf)	EFFECTIVE SPACING b = S5/2 "b" (ft-in)	JAMB W/O CONNECTION SPAN LF (ft-in)
76.0 or less	1'- 9"	12'- 6"
	2'- 0"	12'- 6"
	2'- 3"	12'- 6"
	2'- 6"	12'- 6"
	2'- 9"	12'- 6"
	3'- 0"	12'- 6"
	3'- 3"	12'- 6"
80.0	1'- 9"	12'- 6"
	2'- 0"	12'- 6"
	2'- 3"	12'- 6"
	2'- 6"	12'- 6"
	2'- 9"	12'- 6"
	3'- 0"	12'- 6"
	3'- 3"	12'- 3"
90.0	1'- 9"	12'- 6"
	2'- 0"	12'- 6"
	2'- 3"	12'- 6"
	2'- 6"	12'- 6"
	2'- 9"	12'- 6"
	3'- 0"	11'- 7"
	3'- 3"	10'- 11"
100.0	1'- 9"	12'- 6"
	2'- 0"	12'- 6"
	2'- 3"	12'- 6"
	2'- 6"	12'- 6"
	2'- 9"	11'- 4"
	3'- 0"	10'- 5"
	3'- 3"	9'- 10"

FLORIDA BUILDING CODE (High Velocity Hurricane Zone)

F.P./M.C.V./A.G. DRAWN BY

11/17/11 DATE

11-123 DRAWING No

SHEET 22A OF 36

HR-251 CAPTURED CURTAIN WALL SYSTEM
LARGE MISSILE IMPACT INSULATED GLASS

Oldcastle BuildingEnvelope™
803 Airport Rd - Terrell, TX 75160
www.OldcastleBE.com - Phone 800-869-4567

REV. No	DESCRIPTION	DATE	REV. No	DESCRIPTION	DATE
1	DLD 11-002	11/22/11	3	-	-
2			4	-	-

©2011 TILTECO, INC

TILTECO INC.
TILLIT TESTING & ENGINEERING COMPANY
6355 N.W. 36th. St., Ste. 305, VIRGINIA GARDENS, FLORIDA 33166
Phone : (305)871-1530 , Fax : (305)871-1531
e-mail: tilteco@aol.com
EB-0006719
WALTER A. TILLIT JR., P.E.
FLORIDA Lic. # 44167

WALTER A. TILLIT JR. LICENSE No. 44167 STATE OF FLORIDA PROFESSIONAL ENGINEER

P.E. SEAL/SIGNATURE/DATE

PRODUCT REVISED
as complying with the Florida Building Code
Acceptance No 11-1206.08
Expiration Date Dec 9, 2014
By Miami-Dade Product Control

MIAMI-DADE COUNTY

CORNER MULLION DETAILS (PLAN)

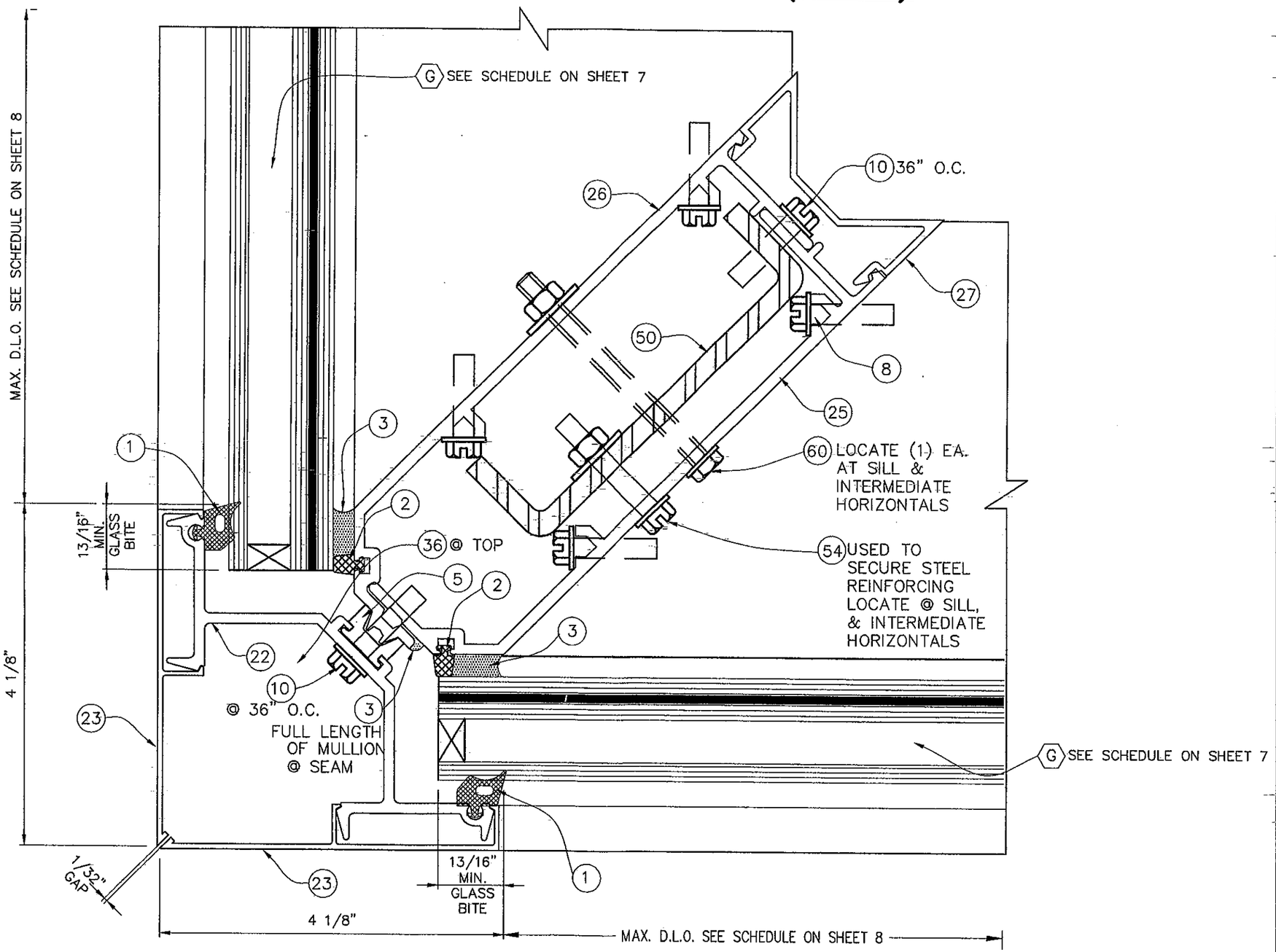

14
90 DEG CORNER CAPTURED PLAN

FLORIDA BUILDING CODE (High Velocity Hurricane Zone)

©2011 TILTECO, INC

TILLIT TESTING & ENGINEERING COMPANY
6355 N.W. 36th. St. Ste. 305, VIRGINIA GARDENS, FLORIDA 33166
Phone : (305)871-1530 . Fax : (305)871-1531
e-mail: tilteco@aol.com
EB-00067719
WALTER A. TILLIT JR., P.E.
FLORIDA Lic. # 44167

HR-251 CAPTURED CURTAIN WALL SYSTEM
LARGE MISSILE IMPACT INSULATED GLASS

Oldcastle BuildingEnvelope™
803 Airport Rd - Terrell, TX 75160
www.OldcastleBE.com - Phone 800-869-4567

REV. No.	DESCRIPTION	DATE	REV. No.	DESCRIPTION	DATE
1	OLD 11-002	11/17/11	3	-	-
2			4	-	-

F.P./M.C.V./A.G.
DRAWN BY

11/17/11
DATE

11-123
DRAWING No

SHEET 23 OF 36

WALTER A. TILLIT JR. LICENSE No 44167 STATE OF FLORIDA PROFESSIONAL ENGINEER
11/23/11

P.E. SEAL/SIGNATURE/DATE

PRODUCT REVISED
as complying with the Florida
Building Code
Acceptance No 11-1206.03
Expiration Date DEC. 4, 2014
By Miami Dade Product Control

MIAMI-DADE COUNTY

JAMBS CONNECTIONS AT INSIDE CORNER (PLAN)

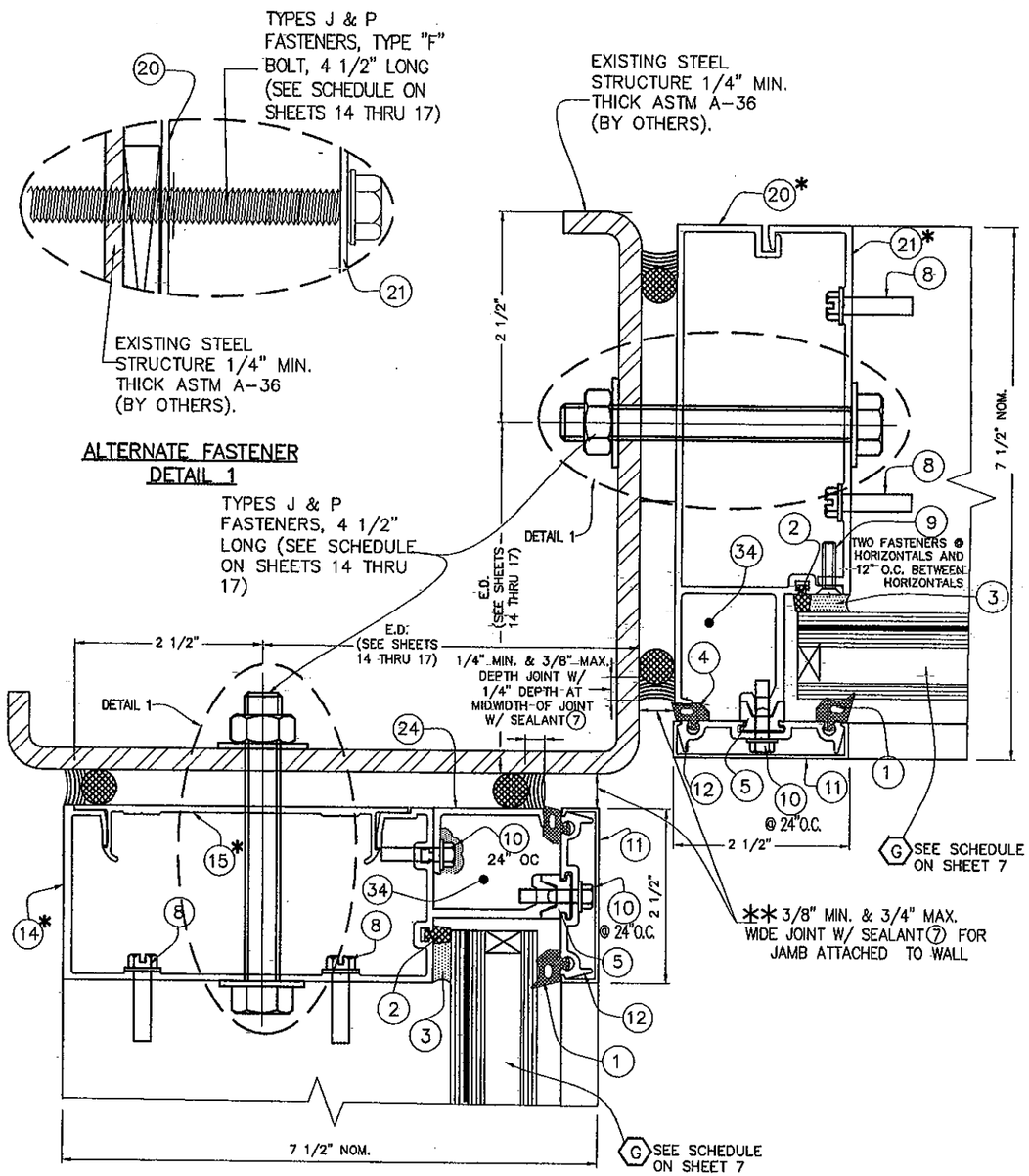

8, 9 @ INSIDE CORNER
JAMB TO EXISTING STEEL (PLAN)

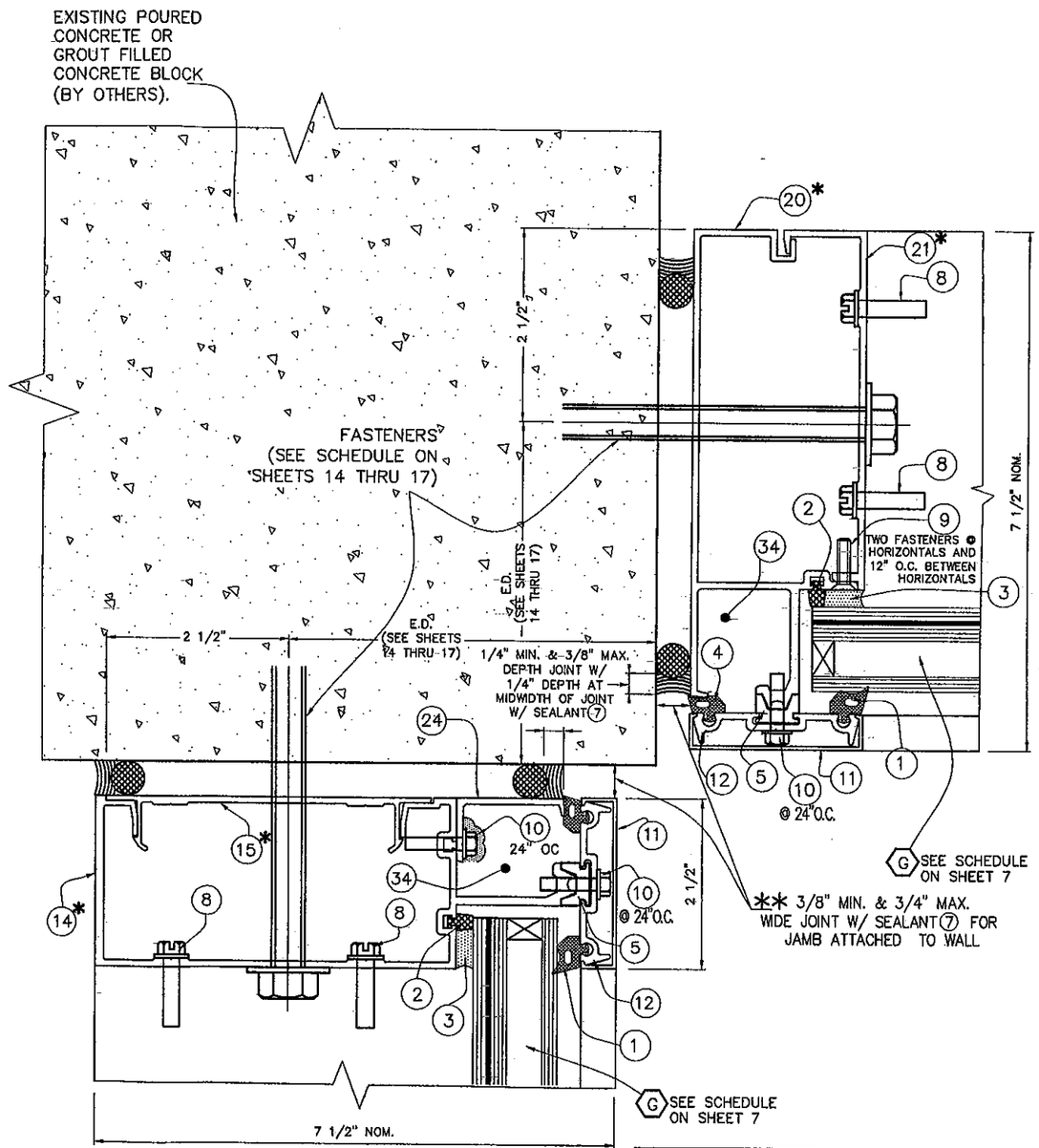

8A, 9A @ INSIDE CORNER
JAMB TO POURED CONCRETE (PLAN)

* JAMBS MAY BE (14) + (15) OR (20) + (21) INTERCHANGABLE

** NOTE: ABOVE INDICATED MAXIMUM AND MINIMUM VALUES FOR SPECIFIED SEALANT VERTICAL JOINT WIDTH AT JAMBS CONNECTED TO WALL HAVE BEEN DETERMINED ONLY TAKING INTO CONSIDERATION THE ACTUAL MOVEMENT OF GLASS WALL AT JAMBS DUE TO THERMAL, WIND AND ITS OWN CONSTRUCTION TOLERANCE, AND NOT PERFORMANCE FACTORS FROM THE SURROUNDING STRUCTURE.

FLORIDA BUILDING CODE (High Velocity Hurricane Zone)

©2011 TILTECO, INC

HR-251 CAPTURED CURTAIN WALL SYSTEM
LARGE MISSILE IMPACT INSULATED GLASS

Oldcastle BuildingEnvelope™
803 Airport Rd - Terrell, TX 75160
www.OldcastleBE.com - Phone 800-869-4567

REV. No	DESCRIPTION	DATE
1	OLD 11-002	11/7/11
2		
3	-	-
4	-	-

TILTECO INC.
TILLIT TESTING & ENGINEERING COMPANY
6355 N.W. 36th. St., Ste. 305, VIRGINIA GARDENS, FLORIDA 33166
Phone : (305)871-1530 . Fax : (305)871-1531
e-mail: tilteco@aol.com
EB-0006719
WALTER A. TILLIT Jr., P.E.
FLORIDA Lic. # 44167

F.P./M.C.V./A.G. DRAWN BY
11/17/11 DATE
11-123 DRAWING No
SHEET 24 OF 36

WALTER A. TILLIT JR. LICENSE # 44167 STATE OF FLORIDA PROFESSIONAL ENGINEER
11/22/12
P.E. SEAL/SIGNATURE/DATE

PRODUCT REVISED as complying with the Florida Building Code
Acceptance No 11-1206.04
Expiration Date Dec. 9, 2014
By Miami Dade Product Control

MIAMI-DADE COUNTY

JAMB MULLIONS NOT ATTACHED TO INSIDE CORNER OF EXISTING STRUCTURE FOR SINGLE SPAN ONLY (PLAN)

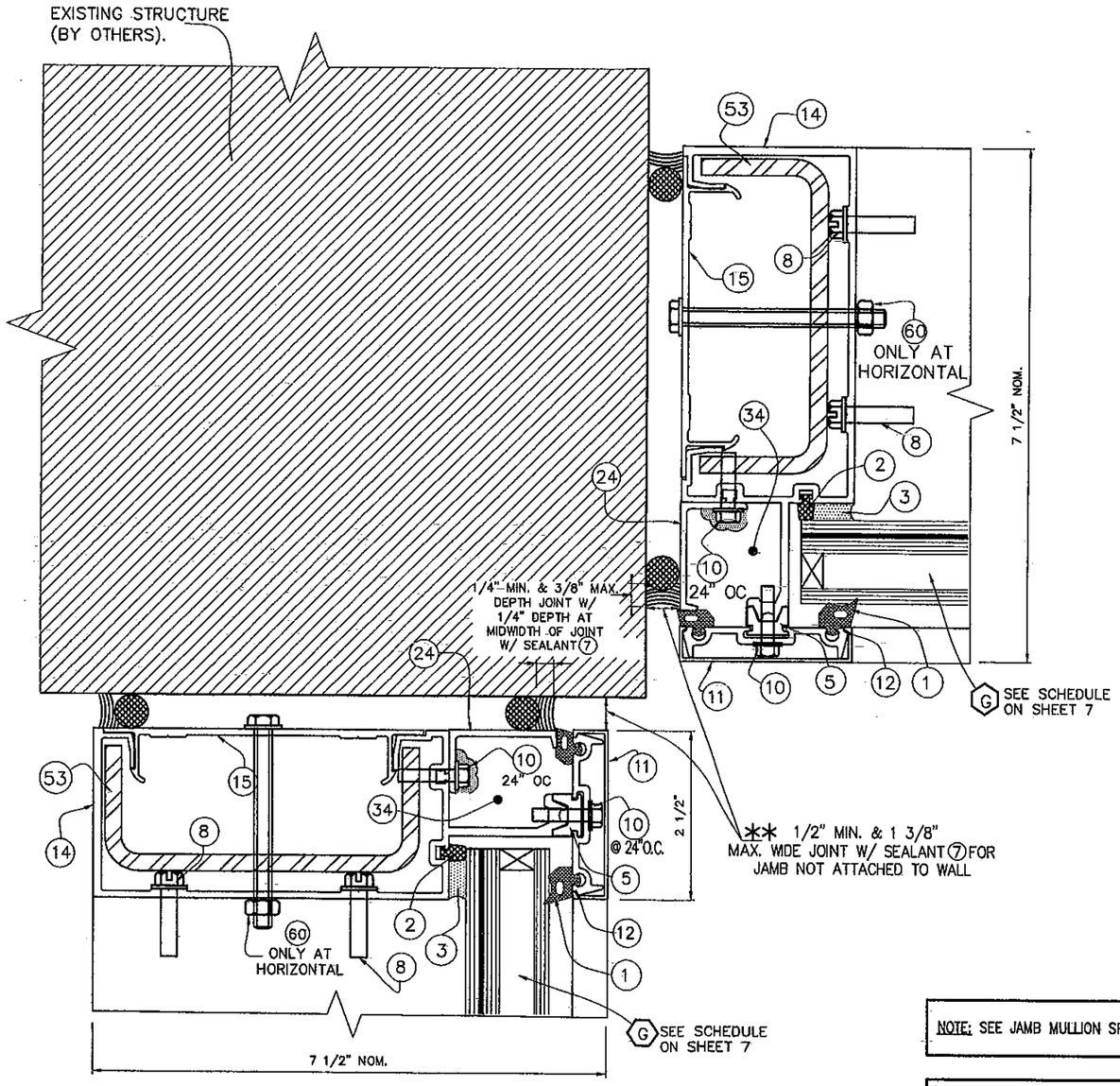

8B @ INSIDE CORNER
JAMB MULLION TO EXISTING
STRUCTURE (PLAN)

NOTE: SEE JAMB MULLION SPAN SCHEDULE ON SHEET 22A.

** NOTE: ABOVE INDICATED MAXIMUM AND MINIMUM VALUES FOR SPECIFIED SEALANT VERTICAL JOINT WIDTH AT JAMBS NOT CONNECTED TO WALL (FREE STANDING) HAVE BEEN DETERMINED ONLY TAKING INTO CONSIDERATION THE ACTUAL MOVEMENT OF GLASS WALL AT JAMBS DUE TO THERMAL, WIND AND ITS OWN CONSTRUCTION TOLERANCE, AND NOT PERFORMANCE FACTORS FROM THE SURROUNDING STRUCTURE.

FLORIDA BUILDING CODE (High Velocity Hurricane Zone)

F.P./M.C.V./A.G. DRAWN BY

11/17/11 DATE

11-123 DRAWING No

SHEET 24A OF 36

HR-251 CAPTURED CURTAIN WALL SYSTEM
LARGE MISSILE IMPACT INSULATED GLASS

Oldcastle BuildingEnvelope™
803 Airport Rd - Terrell, TX 75160
www.OldcastleBE.com - Phone 800-869-4567

REV. No	DESCRIPTION	DATE	REV. No	DESCRIPTION	DATE
1	OLD 11-002	11/17/11	3	-	-
2	-	-	4	-	-

©2011 TILTECO, INC

TILTECO INC.
TILLIT TESTING & ENGINEERING COMPANY
6355 N.W. 36th. St. Ste. 305, VIRGINIA GARDENS, FLORIDA 33166
Phone : (305)871-1530 . Fax : (305)871-1531
e-mail: tilteco@aol.com
EB-0006719
WALTER A. TILLIT JR., P.E.
FLORIDA Lic. # 44167

WALTER A. TILLIT JR. LICENSE No. 44167 STATE OF FLORIDA PROFESSIONAL ENGINEER

11/17/11

P.E. SEAL/SIGNATURE/DATE

PRODUCT REVISED
as complying with the Florida Building Code
Acceptance No 11-12 06 98
Expiration Date DEC. 4, 2014
By Miami-Dade Product Control

MIAMI-DADE COUNTY

SILL & HEAD CONNECTION DETAILS AT SINGLE SPAN & SILL CONNECTION DETAIL FOR TWIN SPAN (PLANS)

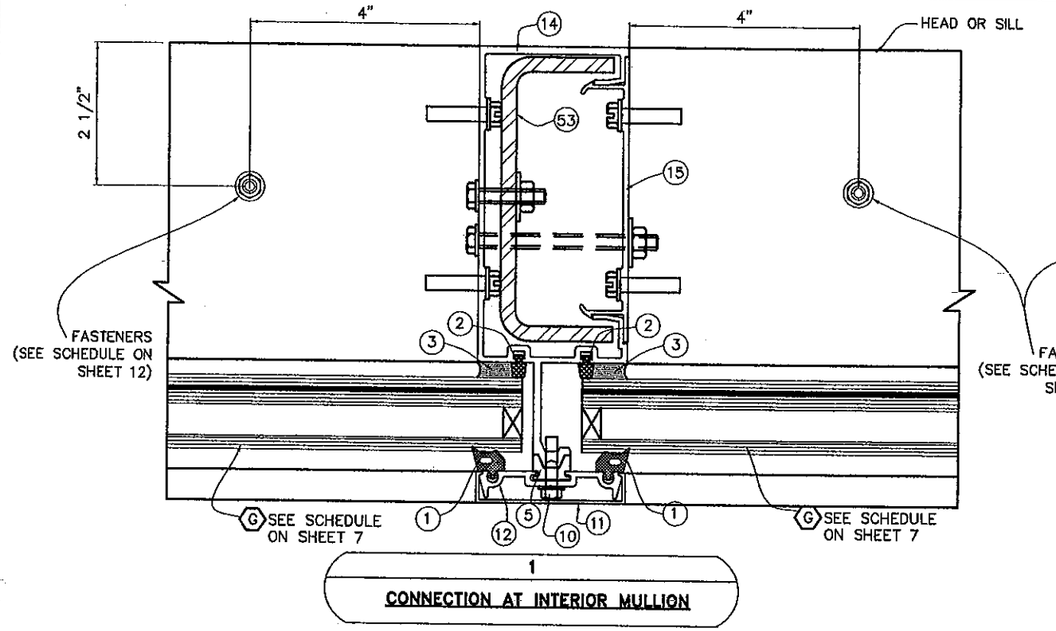

1
CONNECTION AT INTERIOR MULLION

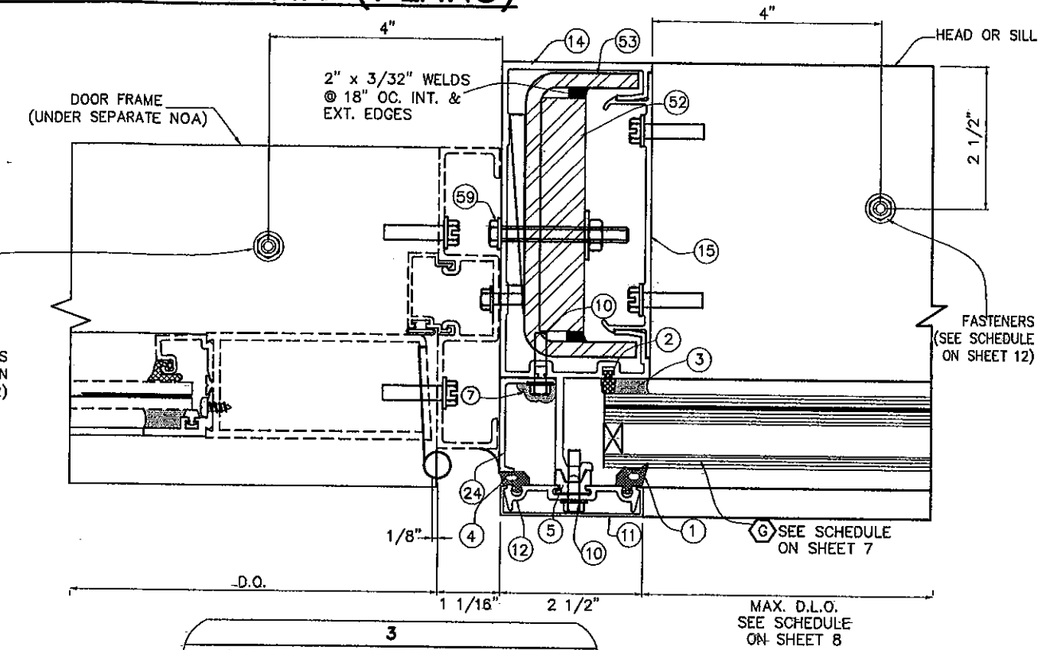

3
CONNECTION AT INTERIOR MULLION AT DOOR

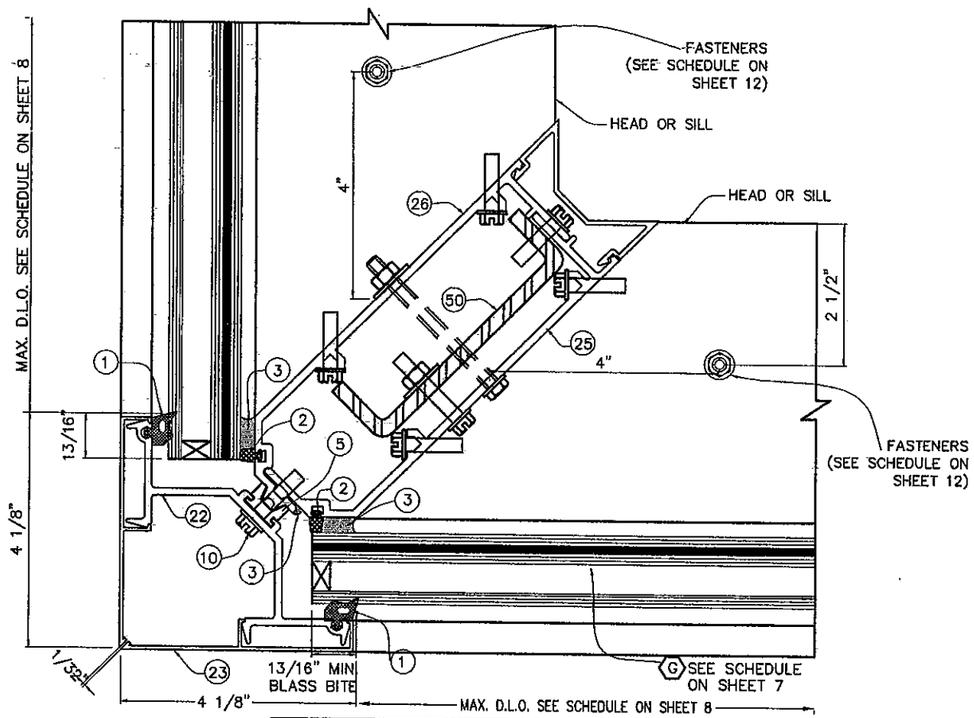

2
CONNECTION AT CORNER MULLION

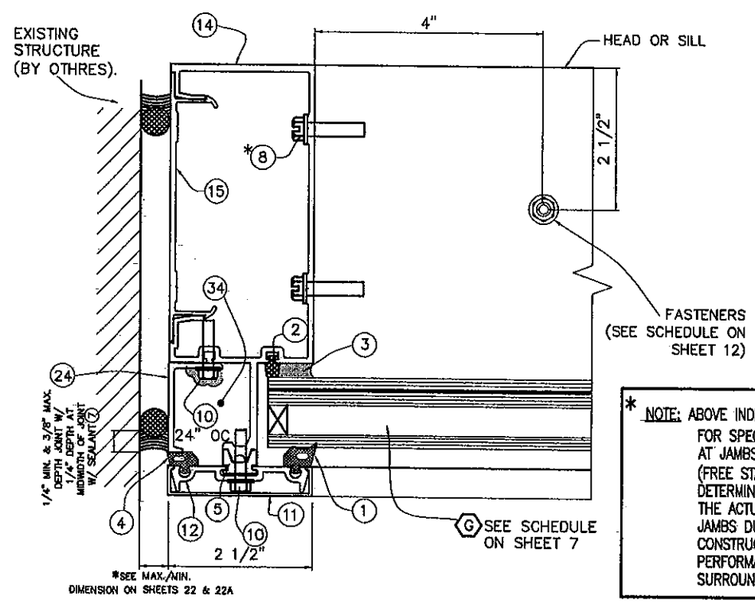

4
CONNECTION AT JAMBS

* NOTE: ABOVE INDICATED MAXIMUM AND MINIMUM VALUES FOR SPECIFIED SEALANT VERTICAL JOINT WIDTH AT JAMBS CONNECTED AND NOT CONNECTED (FREE STANDING) TO WALL HAVE BEEN DETERMINED ONLY TAKING INTO CONSIDERATION THE ACTUAL MOVEMENT OF GLASS WALL AT JAMBS DUE TO THERMAL, WIND AND ITS OWN CONSTRUCTION TOLERANCE, AND NOT PERFORMANCE FACTORS FROM THE SURROUNDING STRUCTURE.

FLORIDA BUILDING CODE (High Velocity Hurricane Zone)

HR-251 CAPTURED CURTAIN WALL SYSTEM
LARGE MISSILE IMPACT INSULATED GLASS

F.P./M.C.V./A.G. DRAWN BY
11/17/11 DATE
11-123 DRAWING No
SHEET 25 OF 36

Oldcastle BuildingEnvelope™
803 Airport Rd - Terrell, TX 75160
www.OldcastleBE.com - Phone 800-869-4567

REV. No	DESCRIPTION	DATE
1	OLD 11-002	11/7/11
2		
3	-	-
4	-	-

©2011 TILTECO, INC

TILTECO INC.
TILLIT TESTING & ENGINEERING COMPANY
6355 N.W. 36th. St., Ste. 305, VIRGINIA GARDENS, FLORIDA 33166
Phone : (305)871-1530 . Fax : (305)871-1531
e-mail: tilteco@aol.com
EB-0006719
WALTER A. TILLIT Jr., P.E.
FLORIDA Lic. # 44167

WALTER A. TILLIT JR. LICENSE No. 44167 STATE OF FLORIDA PROFESSIONAL ENGINEER
11/23/11
P.E. SEAL/SIGNATURE/DATE

PRODUCT REVISED
as complying with the Florida Building Code
Acceptance No 11-1104.08
Expiration Date DEC. 7, 2014
By Miami-Dade Product Control

MIAMI-DADE COUNTY

OPTION #1 FOR HEAD CONNECTION OF TWIN SPAN STANDARD MULLIONS

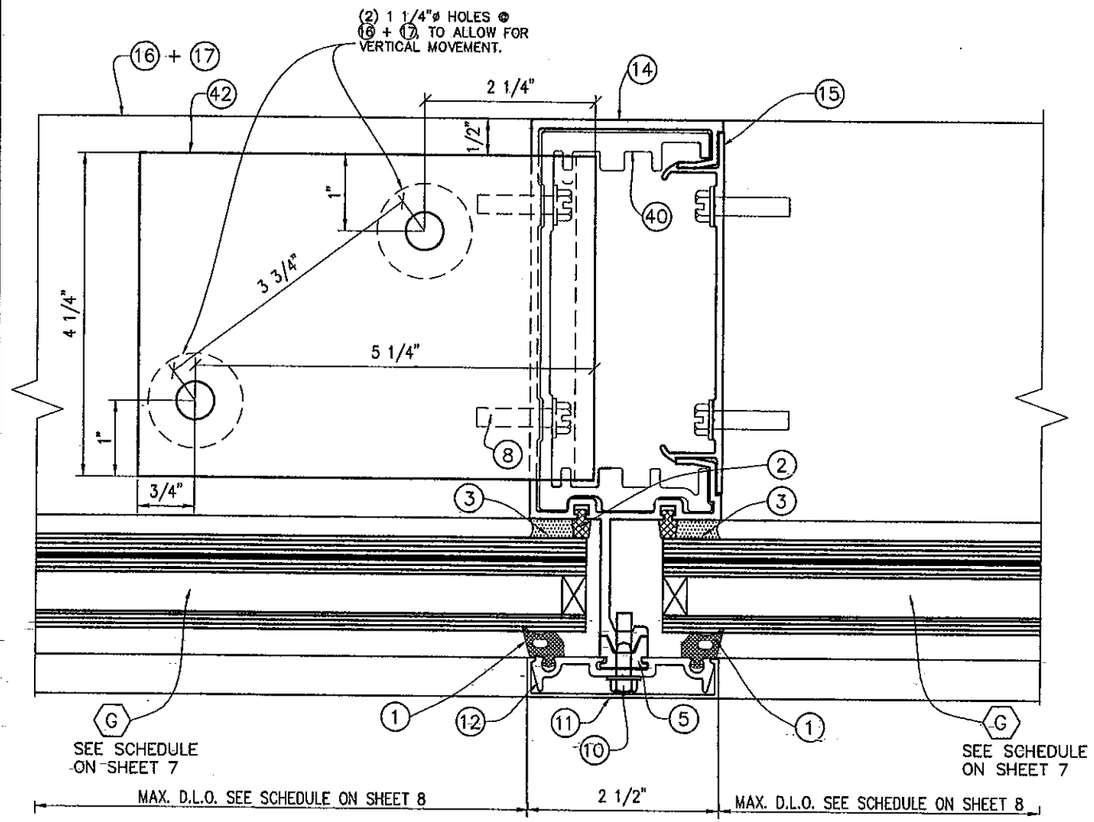

1

17
HEAD ANCHOR (PLAN)

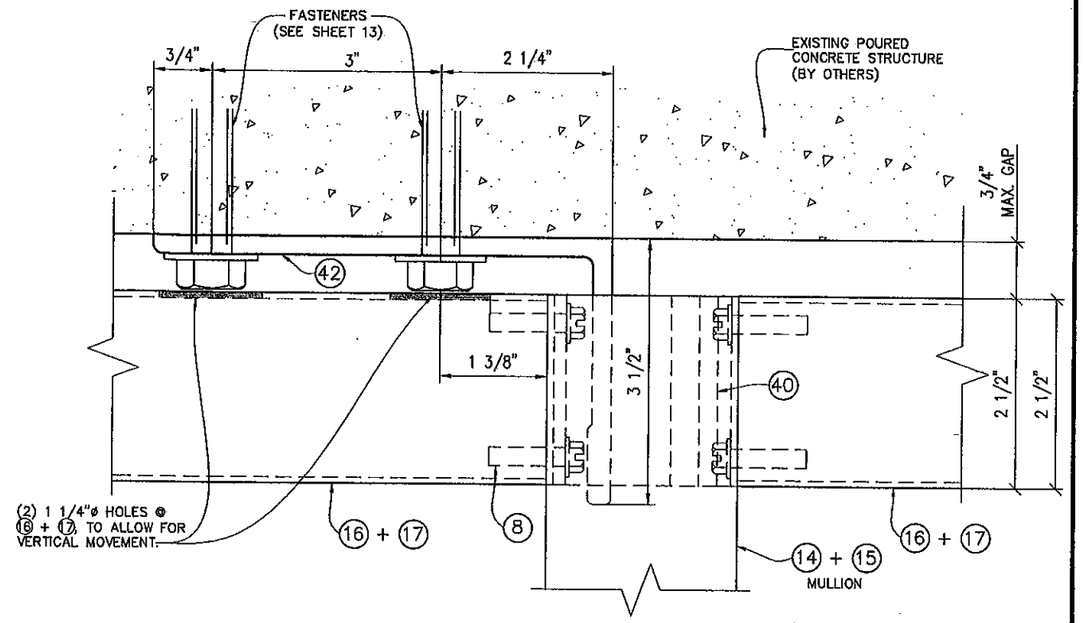

TO EXISTING POURED CONCRETE STRUCTURE

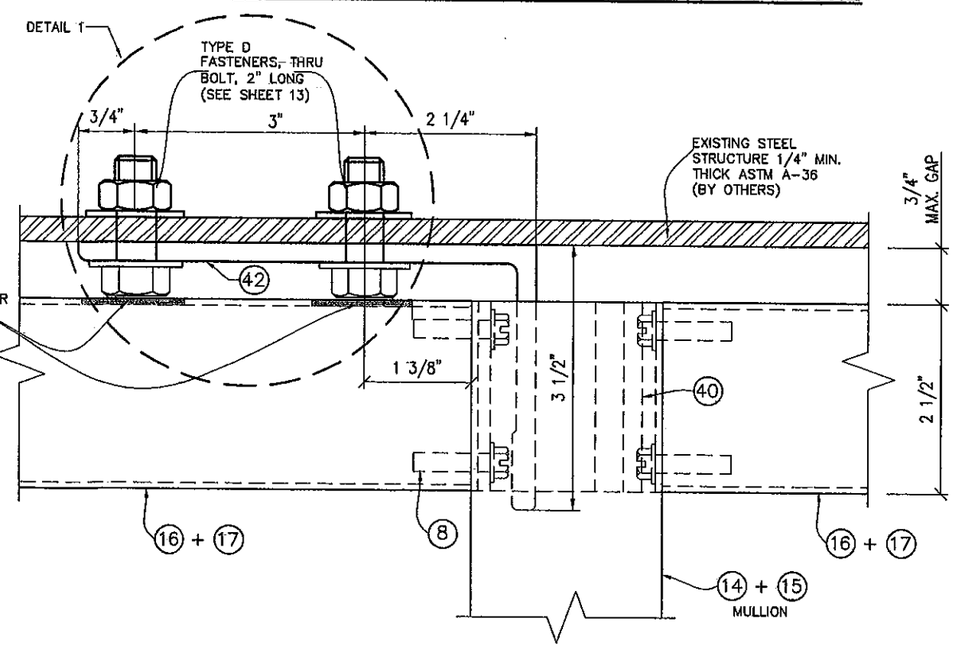

TO EXISTING STEEL STRUCTURE

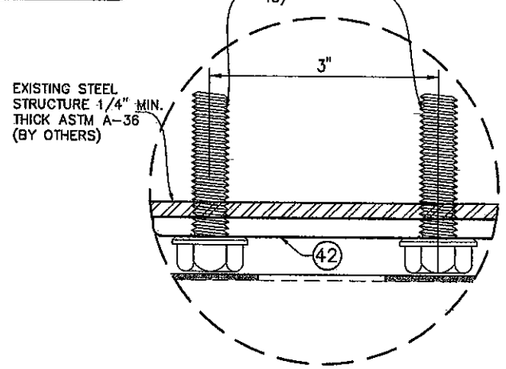

ALTERNATE FASTENER DETAIL 1

EXTERIOR ELEVATIONS 1

FLORIDA BUILDING CODE (High Velocity Hurricane Zone)

F.P./M.C.V./A.G. DRAWN BY

11/17/11 DATE

11-123 DRAWING No

SHEET 26 OF 36

HR-251 CAPTURED CURTAIN WALL SYSTEM
LARGE MISSILE IMPACT INSULATED GLASS

Oldcastle BuildingEnvelope™
803 Airport Rd., Terrell, TX 75160
www.OldcastleBE.com - Phone 800-869-4567

REV. No.	DESCRIPTION	DATE
1	OLD 11-002	11/17/11
2		
3	-	-
4	-	-

©2011 TILTECO, INC

TILTECO INC.
TILLIT TESTING & ENGINEERING COMPANY
6355 N.W. 36th. St., Ste. 305, VIRGINIA GARDENS, FLORIDA 33166
Phone : (305)871-1530 , Fax : (305)871-1531
e-mail: tilteco@aol.com
EB-0006719
WALTER A. TILLIT Jr., P.E.
FLORIDA Lic. # 44167

WALTER A. TILLIT JR. LICENSE No. 44167 STATE OF FLORIDA PROFESSIONAL ENGINEER

P.E. SEAL/SIGNATURE/DATE

PRODUCT REVISED as complying with the Florida Building Code
Acceptance No 11-1206.03
Expiration Date DEC. 7, 2014
By Miami Dade Product Control

MIAMI-DADE COUNTY

OPTION #2 FOR HEAD CONNECTION OF TWIN SPAN STANDARD MULLIONS

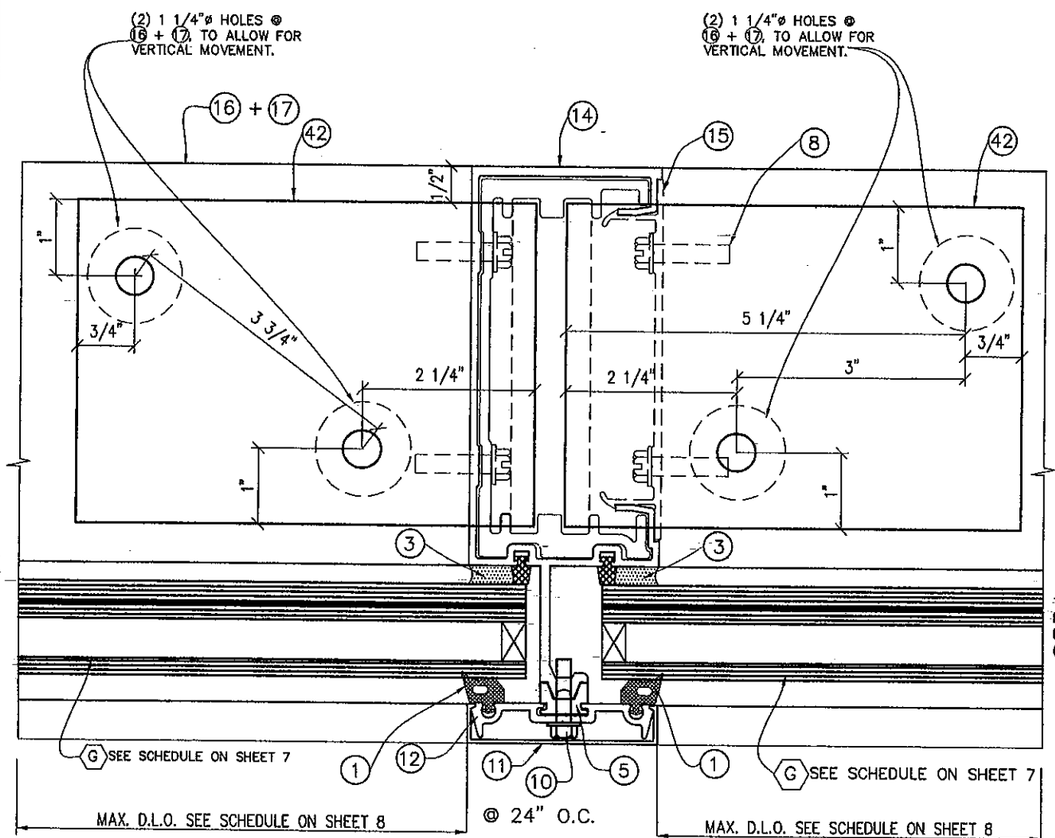

1

17A
HEAD ANCHOR
(PLAN)

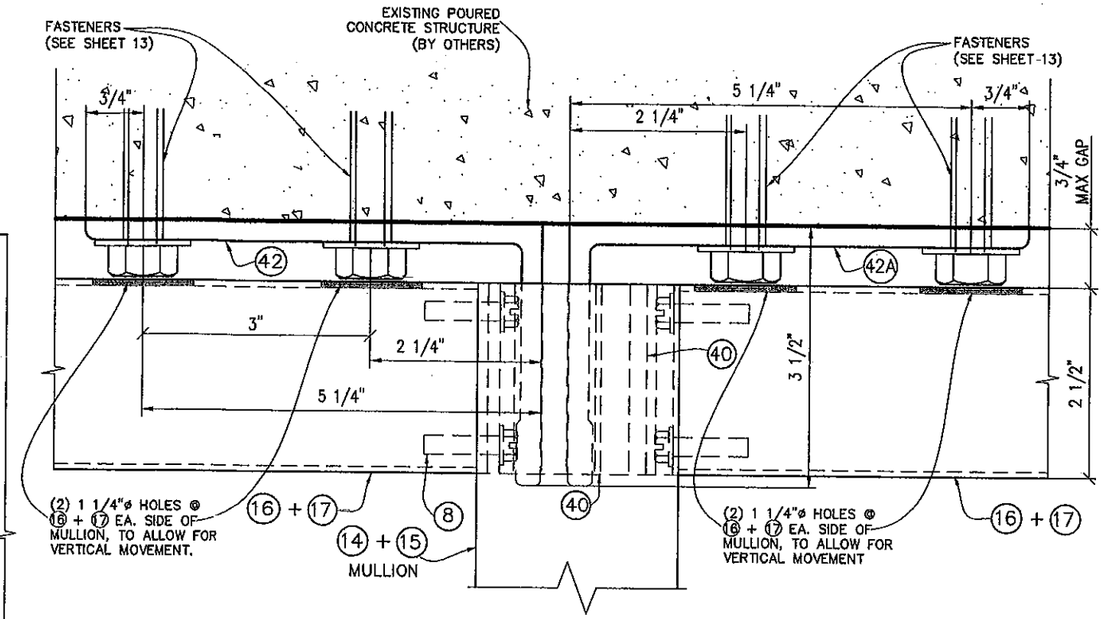

TO EXISTING POURED CONCRETE STRUCTURE

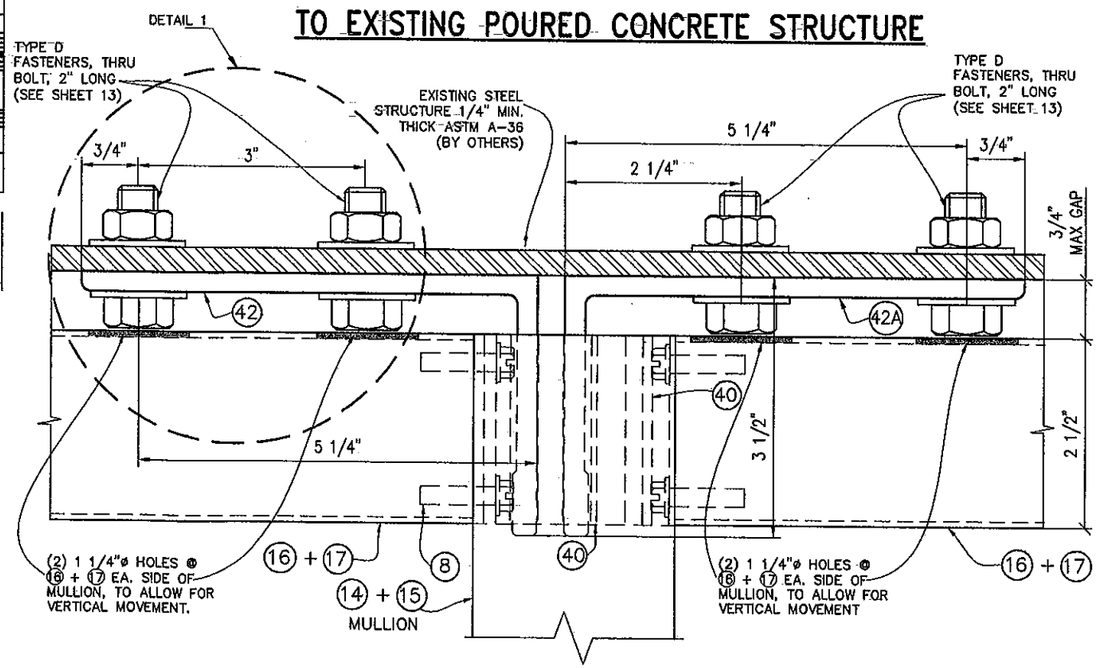

TO EXISTING STEEL STRUCTURE

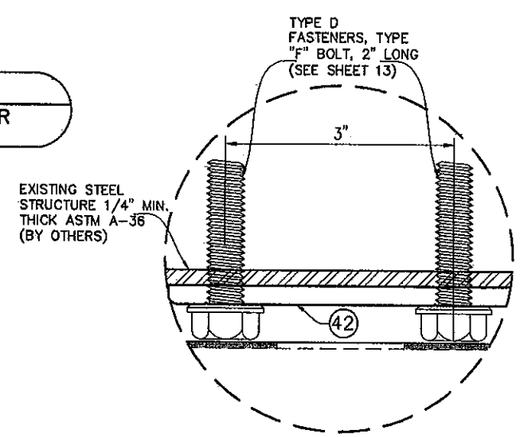

ALTERNATE FASTENER
DETAIL 1

EXTERIOR ELEVATIONS 1

FLORIDA BUILDING CODE (High Velocity Hurricane Zone)

HR-251 CAPTURED CURTAIN WALL SYSTEM
LARGE MISSILE IMPACT INSULATED GLASS

Oldcastle BuildingEnvelope™
803 Airport Rd - Terrell, TX 75160
www.OldcastleBE.com - Phone 800-869-4567

REV. No	DESCRIPTION	DATE
1	OLD 11-002	11/17/11
2		
3	-	-
4	-	-

F.P./M.C.V./A.G. DRAWN BY
11/17/11 DATE
11-123 DRAWING No
SHEET 27 OF 36

©2011 TILTECO, INC

TILTECO, INC
TILLIT TESTING & ENGINEERING COMPANY
6355 N.W. 36th. St., Ste. 305, VIRGINIA GARDENS, FLORIDA 33166
Phone : (305)871-1530 , Fax : (305)871-1531
e-mail: tilteco@aol.com
EB-0006719
WALTER A. TILLIT Jr., P.E.
FLORIDA Lic. # 44167

WALTER A. TILLIT JR. LICENSE No. 44167 STATE OF FLORIDA PROFESSIONAL ENGINEER
11/18/2011

P.E. SEAL/SIGNATURE/DATE

PRODUCT REVISED
as complying with the Florida Building Code
Acceptance No 11-1206.03
Expiration Date Dec. 4, 2014
By Miami-Dade Product Control

MIAMI-DADE COUNTY

HEAD CONNECTION OF TWIN SPAN JAMBS

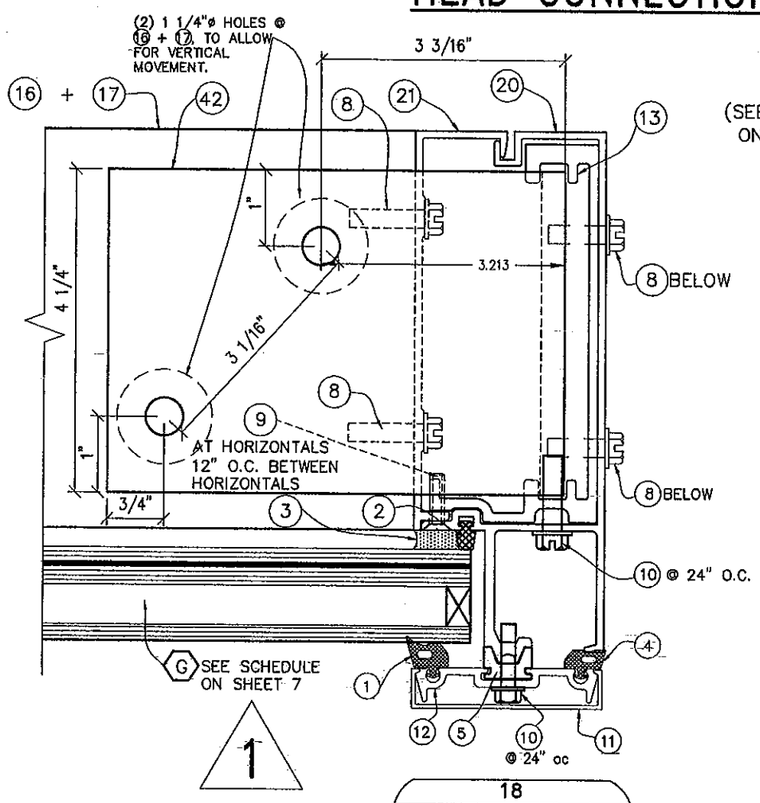

18
JAMB HEAD ANCHOR PLAN

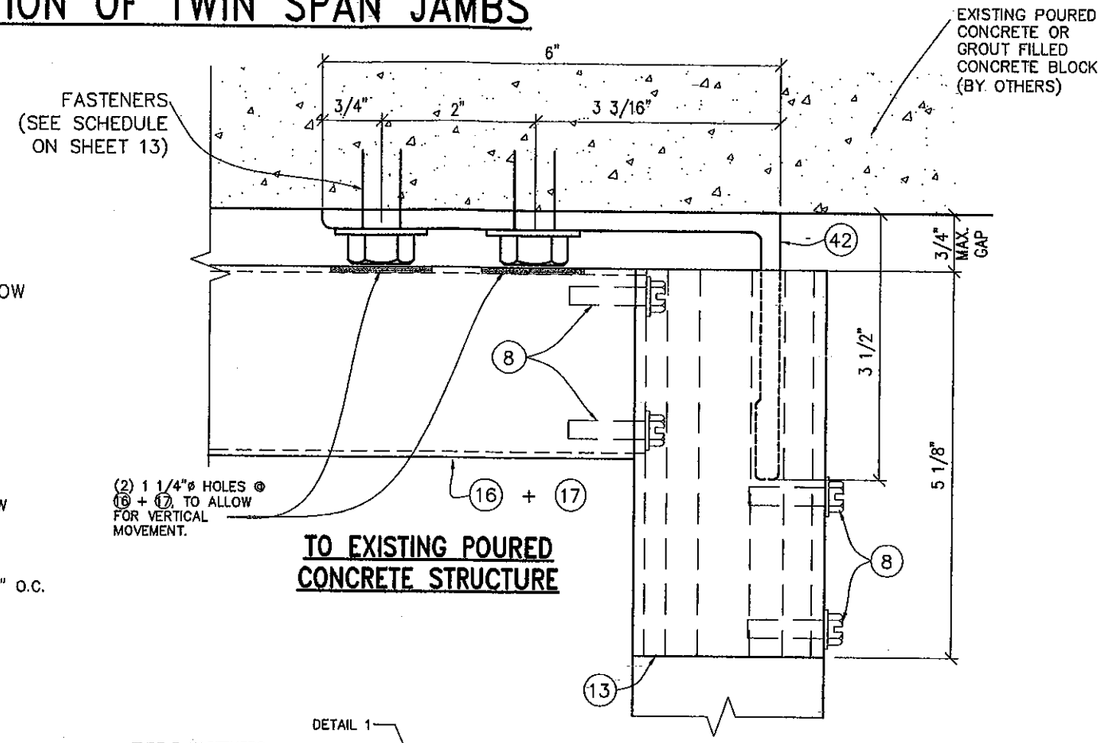

TO EXISTING POURED CONCRETE STRUCTURE

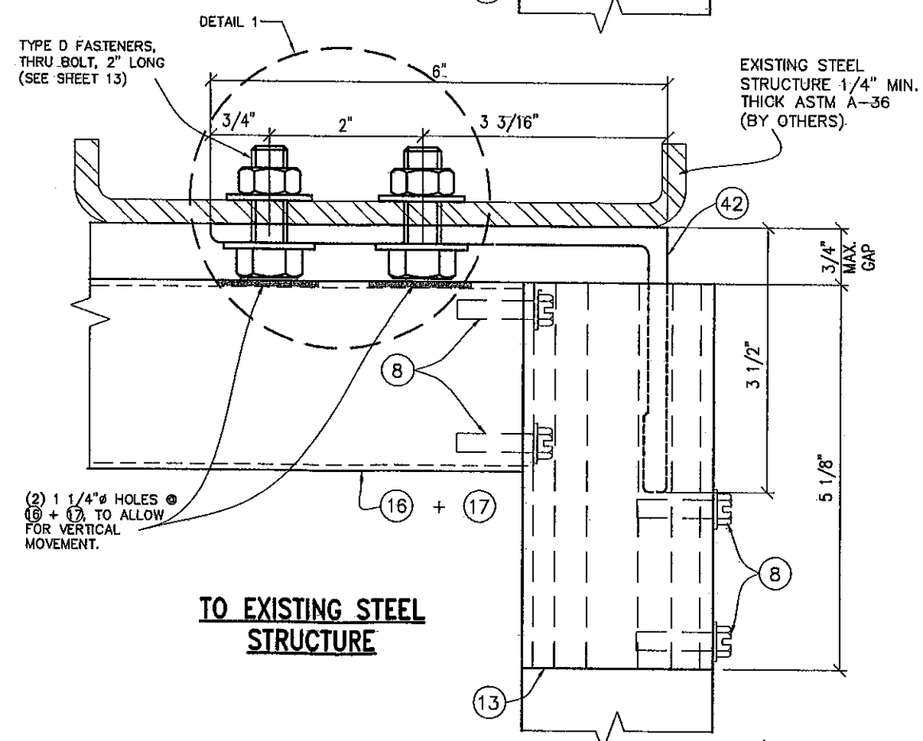

TO EXISTING STEEL STRUCTURE

EXTERIOR ELEVATIONS 1

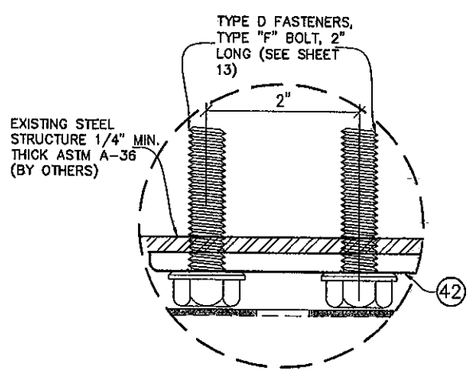

ALTERNATE FASTENER DETAIL 1

FLORIDA BUILDING CODE (High Velocity Hurricane Zone)

F.P./M.C.V./A.G. DRAWN BY

11/17/11 DATE

11-123 DRAWING No

SHEET 28 OF 36

HR-251 CAPTURED CURTAIN WALL SYSTEM
LARGE MISSILE IMPACT INSULATED GLASS

Oldcastle BuildingEnvelope™
803 Airport Rd - Terrell, TX 75160
www.OldcastleBE.com - Phone 800-869-4567

REV. No	DESCRIPTION	DATE
1	OLD 11-002	11/17/11
2		
3	-	-
4	-	-

©2011 TILTECO, INC

TILTECO INC.
TILLIT TESTING & ENGINEERING COMPANY
6355 N.W. 36th. St., Ste. 305, VIRGINIA GARDENS, FLORIDA 33166
Phone : (305)871-1530 . Fax : (305)871-1531
e-mail: tilteco@aol.com
EB-0006719
WALTER A. TILLIT Jr., P.E.
FLORIDA Lic. # 44167

WALTER A. TILLIT JR. LICENSE No. 44167 STATE OF FLORIDA PROFESSIONAL ENGINEER

P.E. SEAL/SIGNATURE/DATE

PRODUCT REVISED as complying with the Florida Building Code
Acceptance No 11-1206.08
Expiration Date Dec 4 2014
By Miami Dade Product Control

MIAMI-DADE COUNTY

HEAD CONNECTION DETAIL FOR TWIN SPAN CORNER MULLION

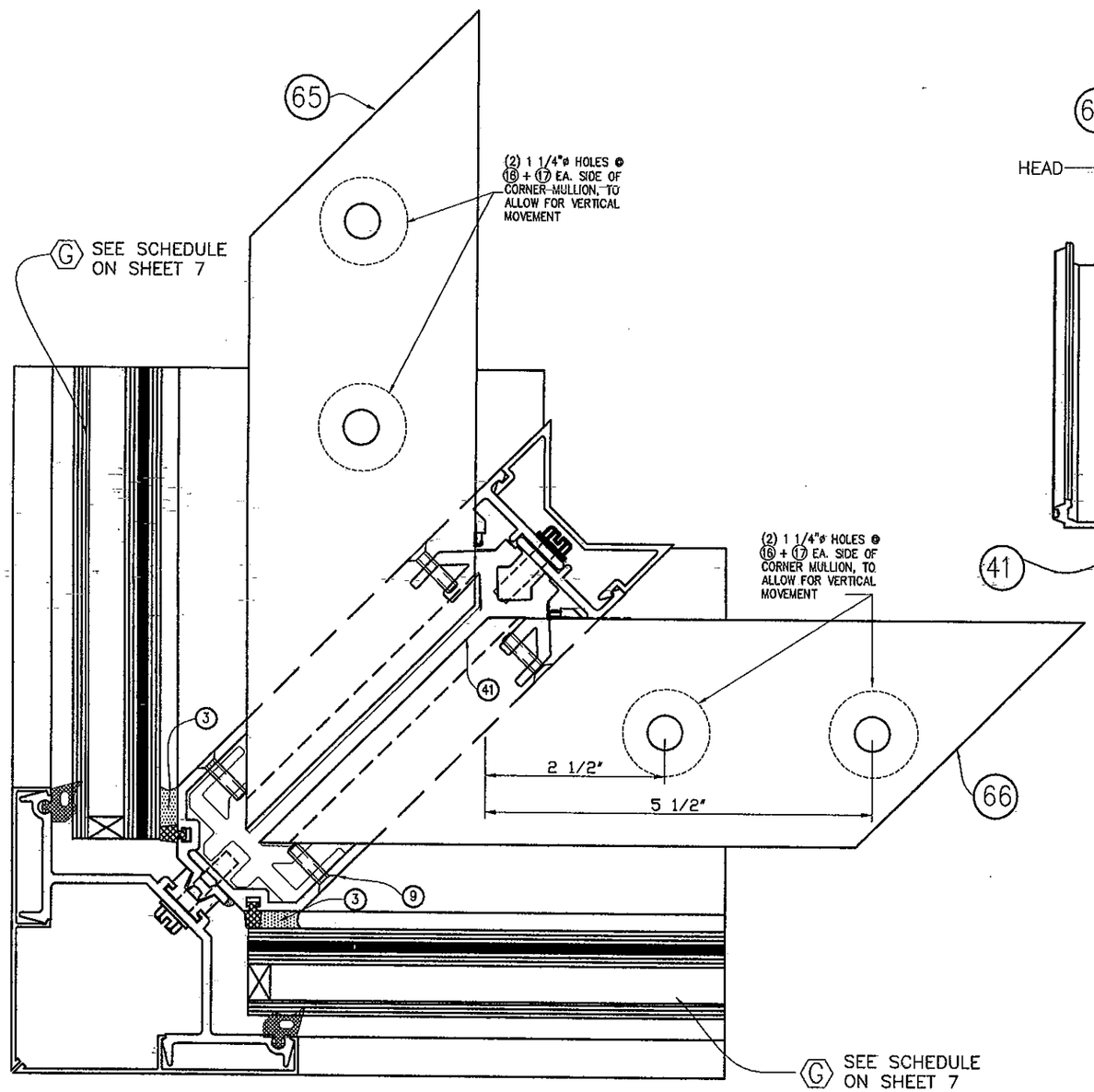

19
CORNER HEAD ANCHOR (PLAN)

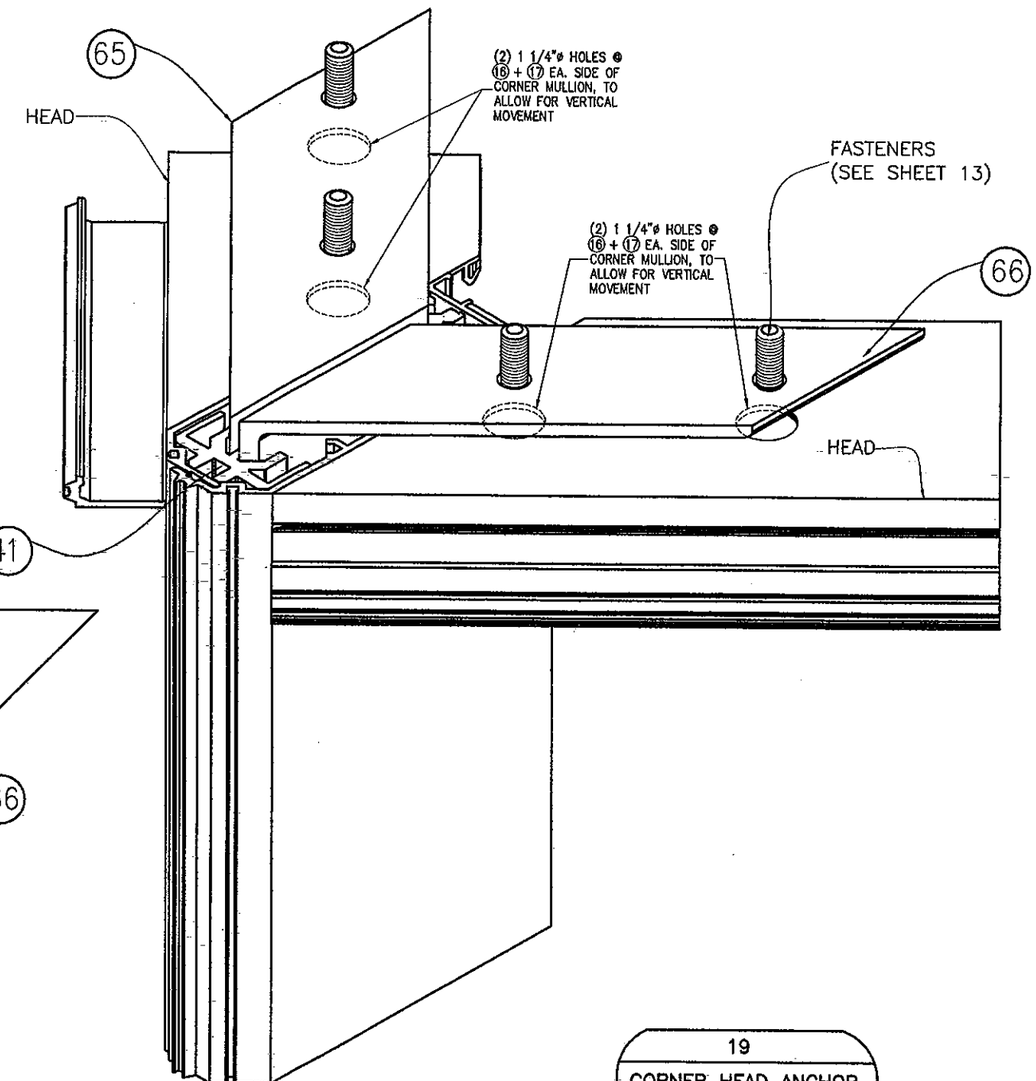

19
CORNER HEAD ANCHOR ISOMETRIC

FLORIDA BUILDING CODE (High Velocity Hurricane Zone)

F.P./M.C.V./A.G. DRAWN BY

11/17/11 DATE

11-123 DRAWING No

SHEET 29 OF 36

HR-251 CAPTURED CURTAIN WALL SYSTEM
LARGE MISSILE IMPACT INSULATED GLASS

Oldcastle BuildingEnvelope™
803 Airport Rd - Terrell, TX 75160
www.OldcastleBE.com - Phone 800-869-4567

REV. No	DESCRIPTION	DATE	REV. No	DESCRIPTION	DATE
1	OLD 11-002	11/17/11	3	-	-
2			4	-	-

©2011 TILTECO, INC

TILTECO INC.
TILLIT TESTING & ENGINEERING COMPANY
6355 N.W. 36th. St. Ste. 305, VIRGINIA GARDENS, FLORIDA 33166
Phone : (305)871-1530 . Fax : (305)871-1531
e-mail: tilteco@aol.com
EB-0006719
WALTER A. TILLIT Jr., P.E.
FLORIDA Lic. # 44167

WALTER A. TILLIT JR. LICENSE No. 44167 STATE OF FLORIDA PROFESSIONAL ENGINEER

1/8/2014

P.E. SEAL/SIGNATURE/DATE

PRODUCT REVISED
as complying with the Florida
Building Code 11-1206.08
Acceptance No
Expiration Date DEC. 7, 2014
By Miami-Dade Product Control

MIAMI-DADE COUNTY

MULLION AND JAMB SPLICES AT TWIN SPAN ONLY (PLAN)

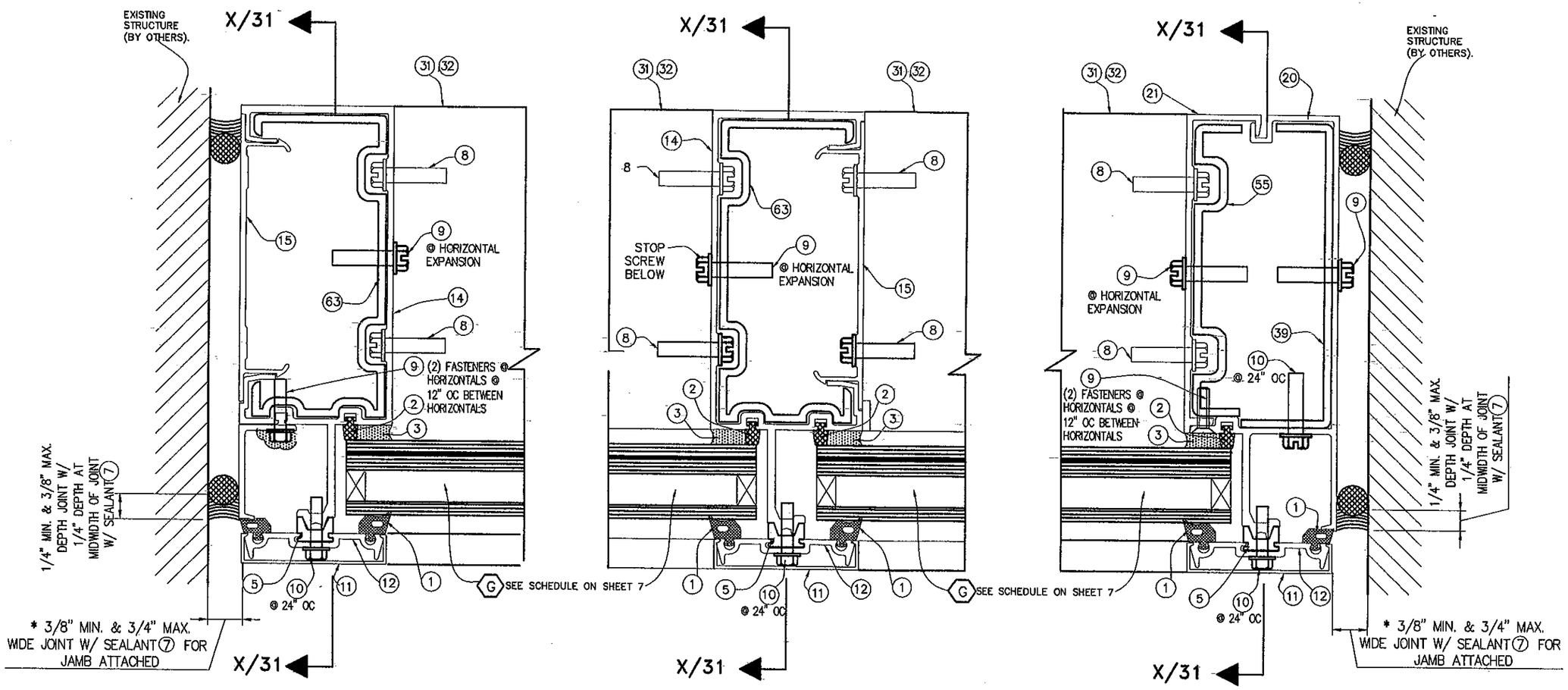

15A
SPLICE JOINT @ STANDARD JAMB W/63

15B
SPLICE JOINT @ STANDARD MULLION W/63

15C
SPLICE JOINT @ 2 PART JAMB W/55+39

* NOTE: ABOVE INDICATED MAXIMUM AND MINIMUM VALUES FOR SPECIFIED SEALANT VERTICAL JOINT WIDTH AT JAMBS CONNECTED TO WALL HAVE BEEN DETERMINED ONLY TAKING INTO CONSIDERATION THE ACTUAL MOVEMENT OF GLASS WALL AT JAMBS DUE TO THERMAL, WIND AND ITS OWN CONSTRUCTION TOLERANCE, AND NOT PERFORMANCE FACTORS FROM THE SURROUNDING STRUCTURE.

FLORIDA BUILDING CODE (High Velocity Hurricane Zone)

F.P./M.C.V./A.G. DRAWN BY

11/17/11 DATE

11-123 DRAWING No

SHEET 30 OF 36

HR-251 CAPTURED CURTAIN WALL SYSTEM
LARGE MISSILE IMPACT INSULATED GLASS

Oldcastle BuildingEnvelope™
803 Airport Rd - Terrell, TX 75160
www.OldcastleBE.com - Phone 800-869-4567

REV. No	DESCRIPTION	DATE	REV. No	DESCRIPTION	DATE
1	OLD 11-002	11/7/11	3	-	-
2			4	-	-

©2011 TILTECO, INC

TILTECO INC.
TILLIT TESTING & ENGINEERING COMPANY
6355 N.W. 36th. St. Ste. 305, VIRGINIA GARDENS, FLORIDA 33166
Phone : (305)871-1530 . Fax : (305)871-1531
e-mail: tilteco@aol.com
EB-0006719
WALTER A. TILLIT Jr., P.E.
FLORIDA Lic. # 44167

WALTER A. TILLIT JR. LICENSE No. 44167 STATE OF FLORIDA PROFESSIONAL ENGINEER

P.E. SEAL/SIGNATURE/DATE

PRODUCT REVISED as complying with the Florida Building Code
Acceptance No 11-1206.08
Expiration Date Dec 9, 2014
By Miami-Dade Product Control

MIAMI-DADE COUNTY

MULLION AND JAMB SPLICES AT TWIN SPAN ONLY (SIDE VIEW)

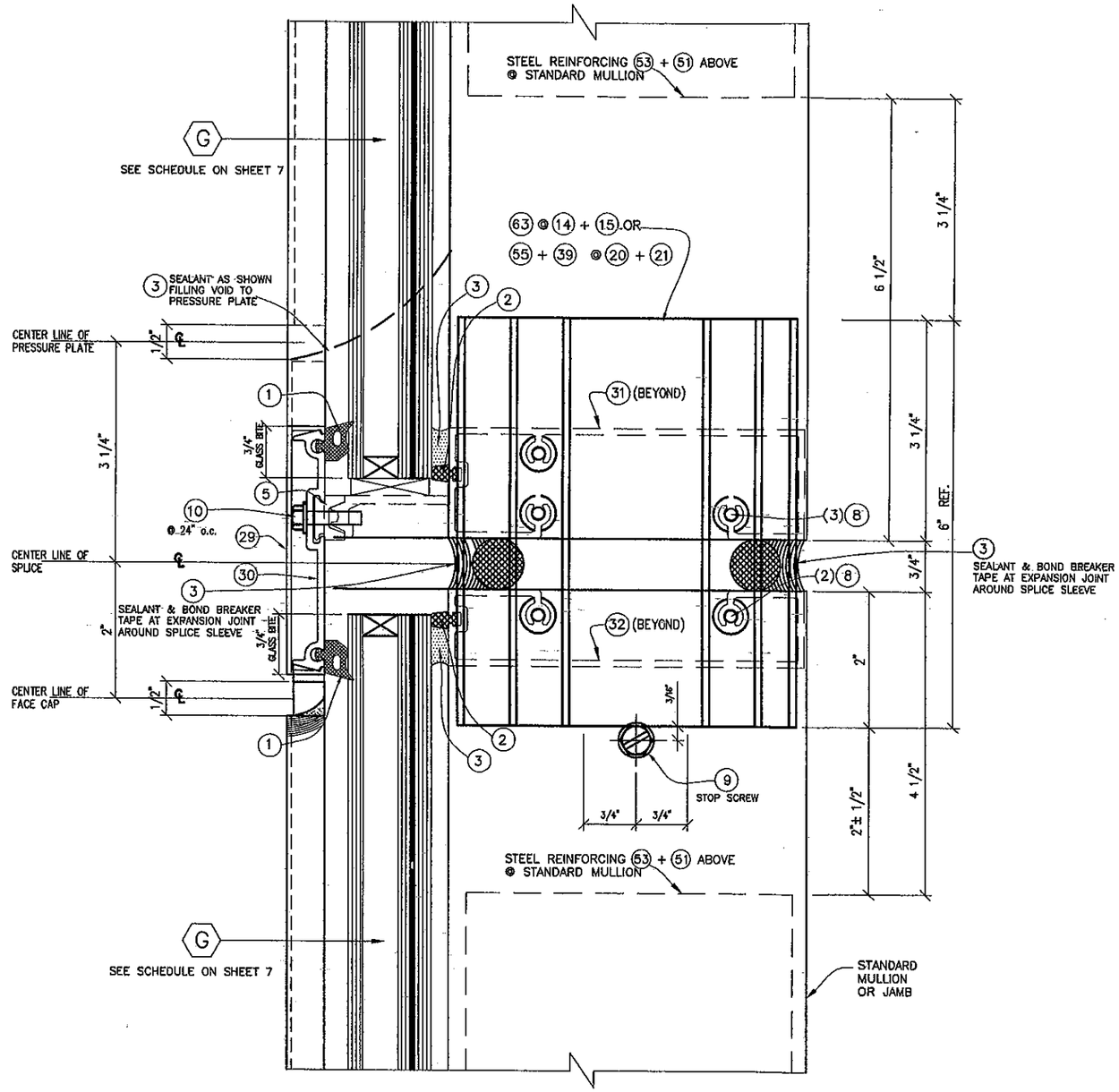

SECTION X–X
SPLICE JOINT @ STD MULLION/JAMB

FLORIDA BUILDING CODE (High Velocity Hurricane Zone)

HR-251 CAPTURED CURTAIN WALL SYSTEM
LARGE MISSILE IMPACT INSULATED GLASS

F.P./M.C.V./A.G. DRAWN BY

11/17/11 DATE

11–123 DRAWING No

SHEET 31 OF 36

Oldcastle BuildingEnvelope™
803 Airport Rd - Terrell, TX 75160
www.OldcastleBE.com - Phone 800-869-4567

REV. No	DESCRIPTION	DATE	REV. No	DESCRIPTION	DATE
1	OLD 11–002	11/17/11	3	–	–
2			4	–	–

©2011 TILTECO, INC

TILTECO INC.
TILLIT TESTING & ENGINEERING COMPANY
6355 N.W. 36th. St., Ste. 305, VIRGINIA GARDENS, FLORIDA 33166
Phone : (305)871–1530 - Fax : (305)871–1531
e–mail: tilteco@aol.com
EB–0006719
WALTER A. TILLIT Jr., P.E.
FLORIDA Lic. # 44167

WALTER A. TILLIT JR. LICENSE No 44167 STATE OF FLORIDA PROFESSIONAL ENGINEER

P.E. SEAL/SIGNATURE/DATE

PRODUCT REVISED
as complying with the Florida Building Code
Acceptance No 11-1206.08
Expiration Date DEC 4 2014
By Miami-Dade Product Control

MIAMI–DADE COUNTY

CORNER MULLION SPLICE AT TWIN SPAN (PLAN)

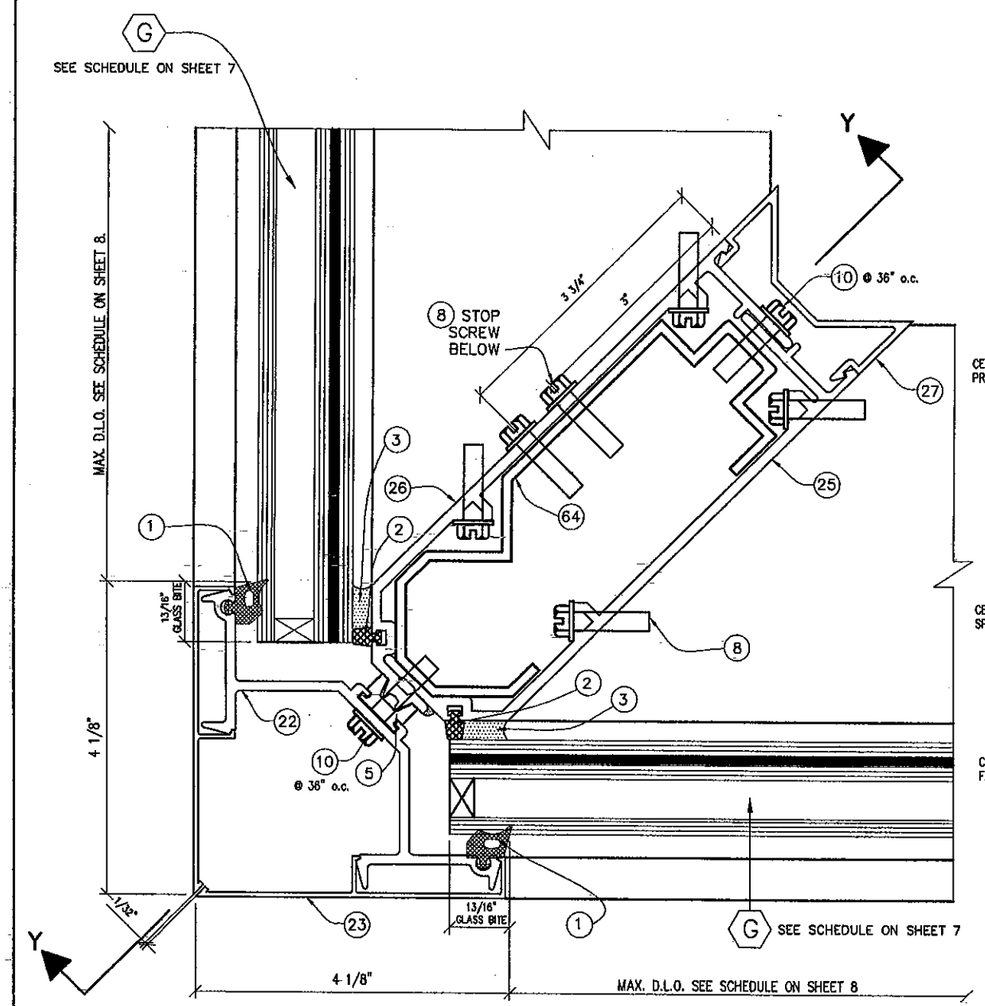

16
SPLICE JOINT @
90 DEG. CORNER
PLAN

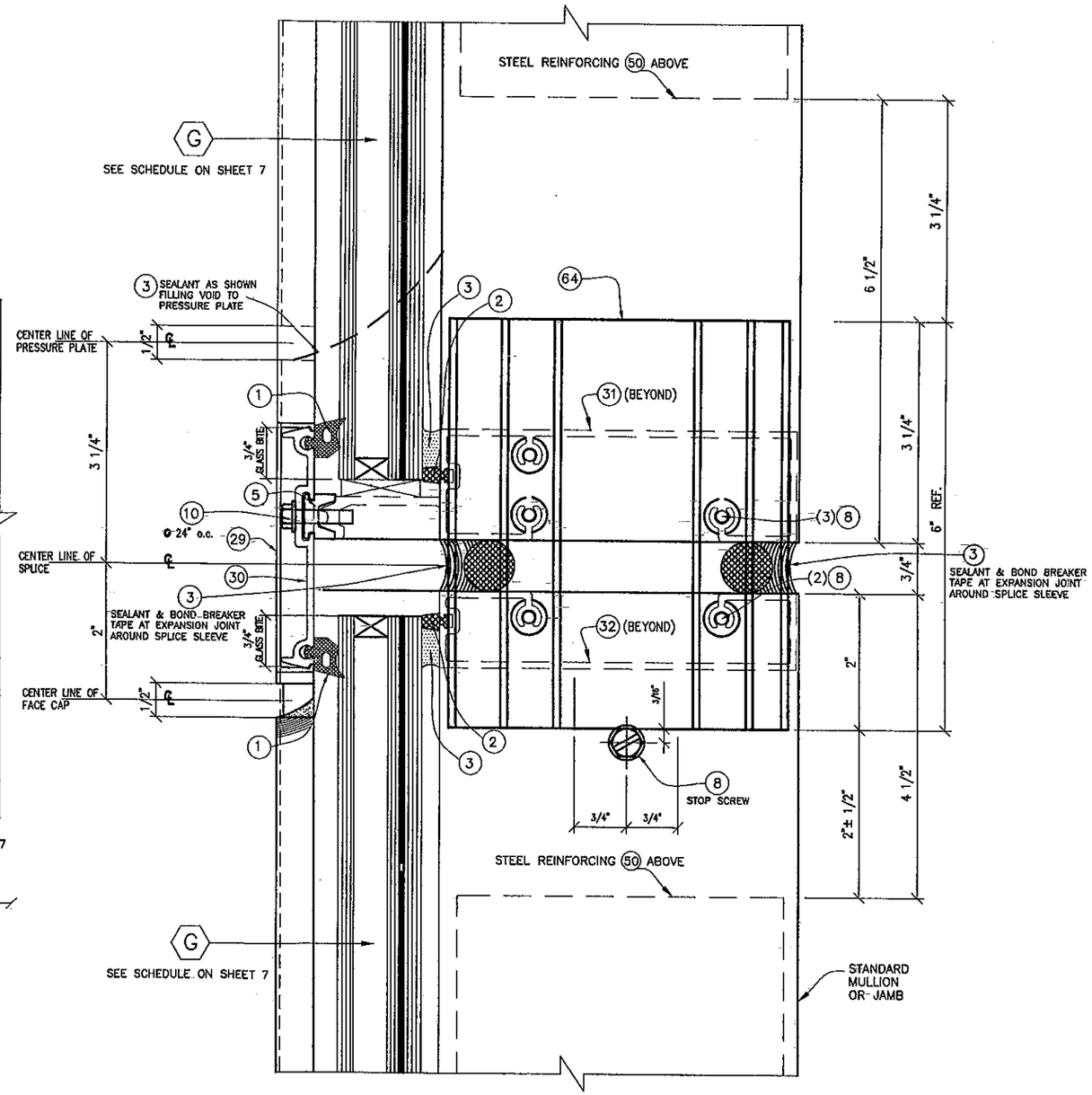

16
SPLICE JOINT @
90 DEG. CORNER
SECTION Y–Y

FLORIDA BUILDING CODE (High Velocity Hurricane Zone)

F.P./M.C.V./A.G.
DRAWN BY

11/17/11
DATE

11–123
DRAWING No

SHEET 32 OF 36

HR-251 CAPTURED CURTAIN WALL SYSTEM
LARGE MISSILE IMPACT INSULATED GLASS

Oldcastle BuildingEnvelope™
803 Airport Rd - Terrell, TX 75160
www.OldcastleBE.com - Phone 800-869-4567

REV. No	DESCRIPTION	DATE
1	OLD 11-002	11/17/11
2		
3	-	-
4	-	-

©2011 TILTECO, INC

TILTECO INC.
TILLIT TESTING & ENGINEERING COMPANY
6355 N.W. 36th. St., Ste. 305, VIRGINIA GARDENS, FLORIDA 33166
Phone : (305)871-1530 , Fax : (305)871-1531
e-mail: tilteco@aol.com
EB-0006719
WALTER A. TILLIT Jr., P.E.
FLORIDA Lic. # 44167

WALTER A. TILLIT JR. LICENSE No 44167 STATE OF FLORIDA PROFESSIONAL ENGINEER
11/23/11

P.E. SEAL/SIGNATURE/DATE

PRODUCT REVISED
as complying with the Florida
Building Code
Acceptance No. 11-1206.08
Expiration Date DEC 9, 2014
By Miami-Dade Product Control

MIAMI–DADE COUNTY

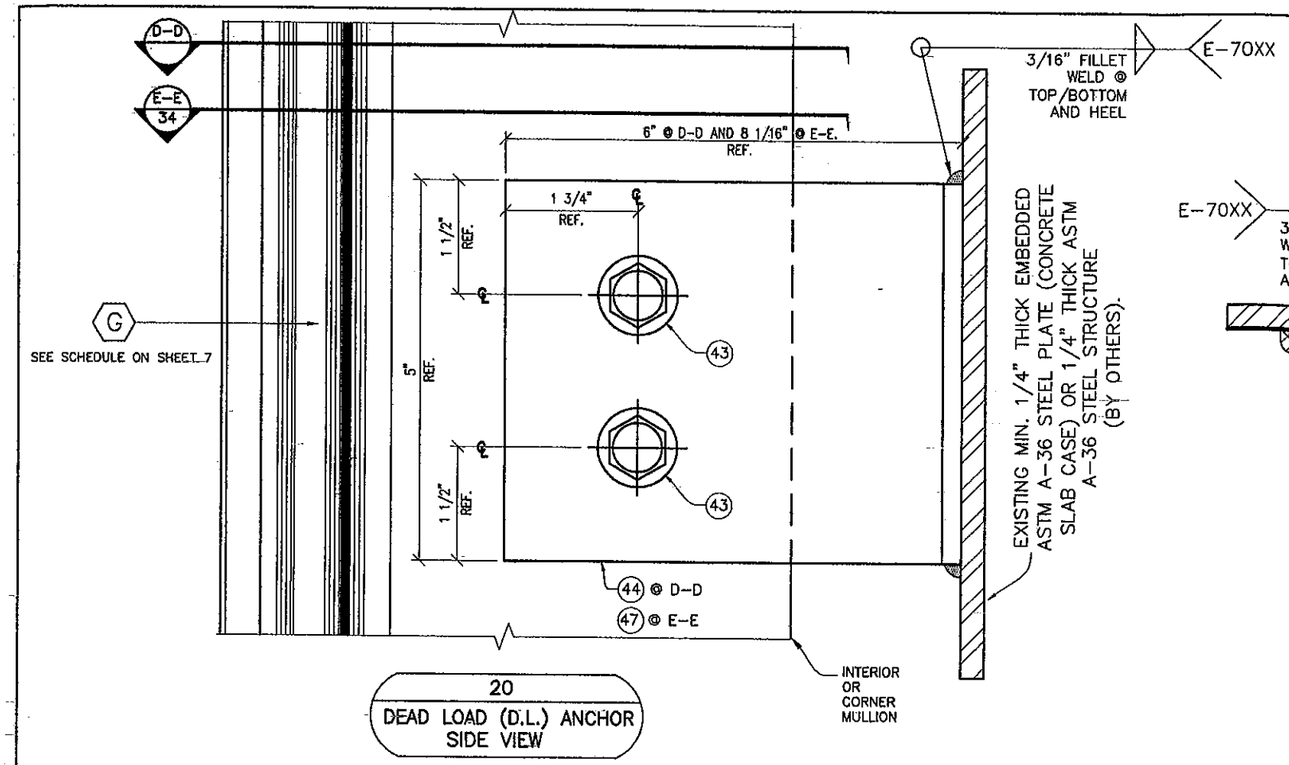

20
DEAD LOAD (D.L.) ANCHOR
SIDE VIEW

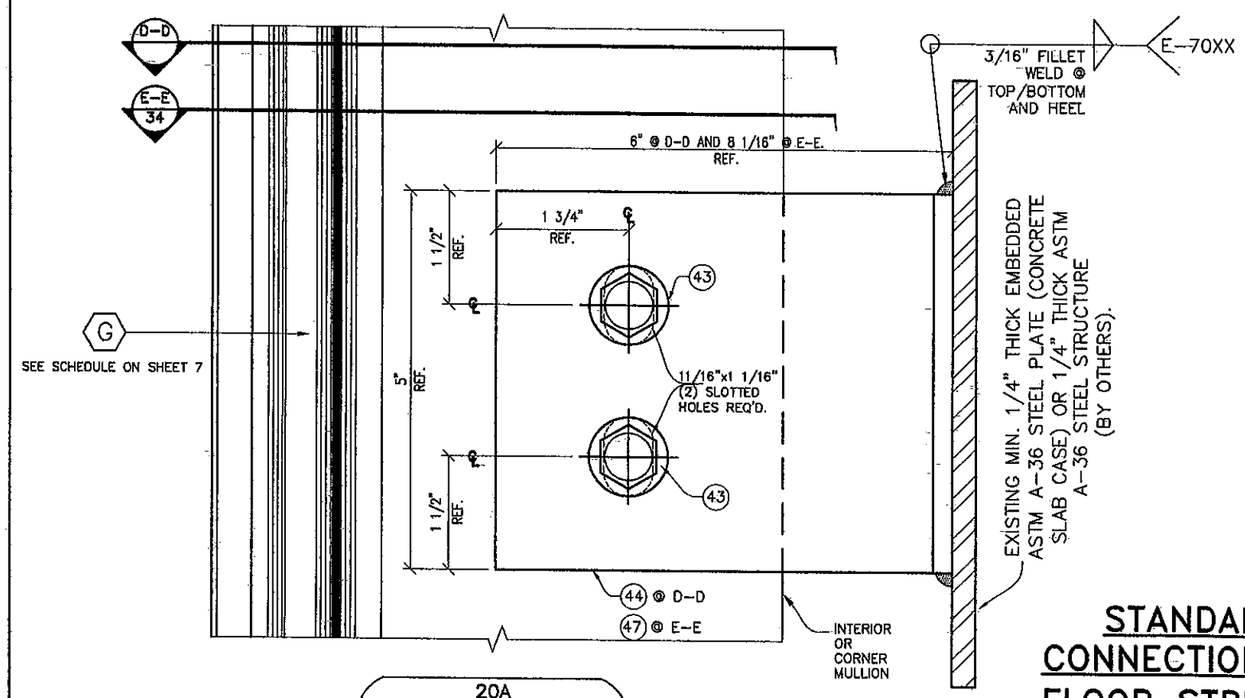

20A
WIND LOAD (W.L.) ANCHOR
SIDE VIEW

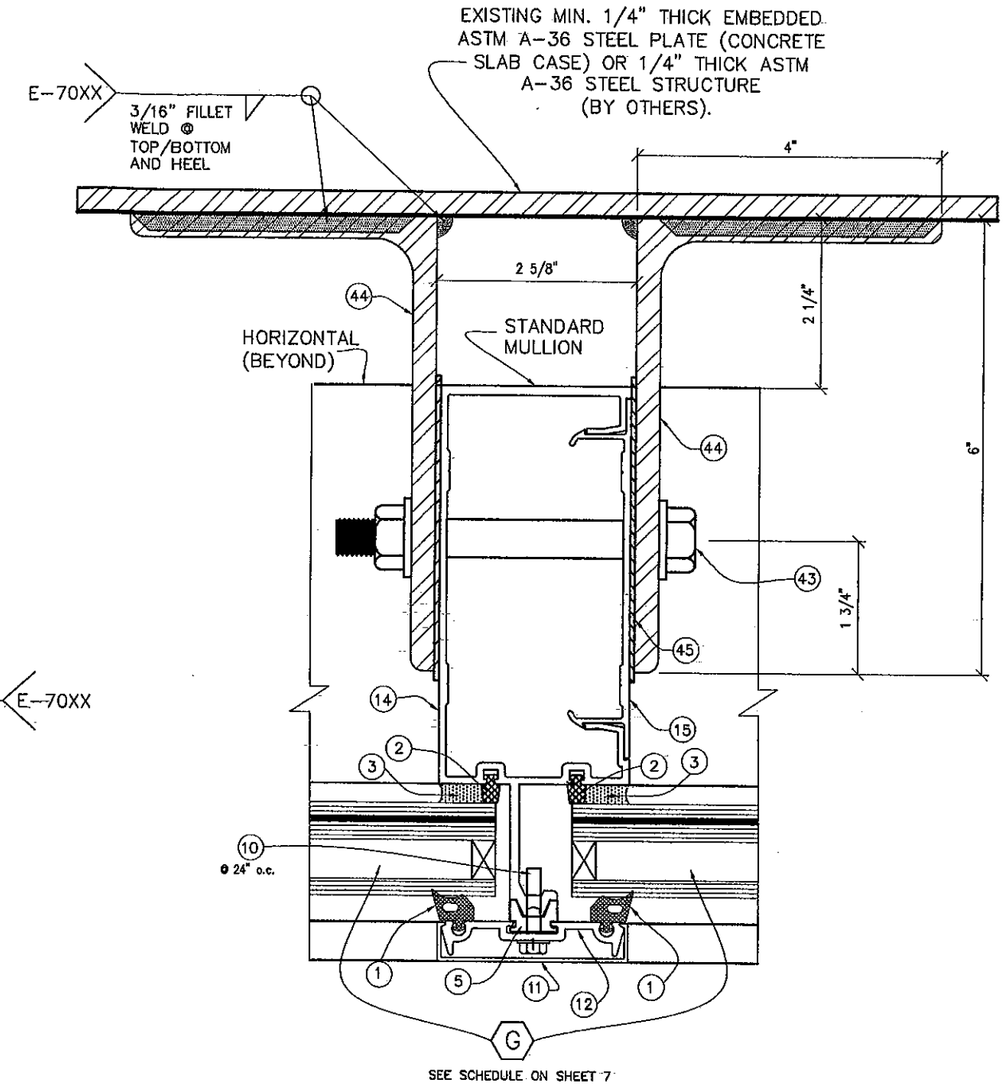

SECTION "D-D"
@ STANDARD
MULLION

STANDARD AND CORNER MULLION CONNECTION TO EXISTING INTERMEDIATE FLOOR STRUCTURE W/ DEAD AND WIND LOAD ANCHORS

FLORIDA BUILDING CODE (High Velocity Hurricane Zone)

HR-251 CAPTURED CURTAIN WALL SYSTEM
LARGE MISSILE IMPACT INSULATED GLASS

F.P./M.C.V./A.G. DRAWN BY
11/17/11 DATE
11-123 DRAWING No
SHEET 33 OF 36

Oldcastle BuildingEnvelope™
803 Airport Rd - Terrell, TX 75160
www.OldcastleBE.com - Phone 800-869-4567

REV. No	DESCRIPTION	DATE
1	OLD 11-002	11/17/11
2		
3	-	-
4	-	-

©2011 TILTECO, INC

TILTECO INC.
TILLIT TESTING & ENGINEERING COMPANY
6355 N.W. 36th. St. Ste. 305, VIRGINIA GARDENS, FLORIDA 33166
Phone : (305)871-1530 . Fax : (305)871-1531
e-mail: tilteco@aol.com
EB-0006719
WALTER A. TILLIT Jr., P.E.
FLORIDA Lic. # 44167

WALTER A. TILLIT JR. LICENSE No 44167 STATE OF FLORIDA PROFESSIONAL ENGINEER
11/17/11
P.E. SEAL/SIGNATURE/DATE

PRODUCT REVISED
as complying with the Florida
Building Code
Acceptance No 11-1206.08
Expiration Date DEC 27 2014
By Manuel Perez
Miami-Dade Product Control

MIAMI-DADE COUNTY

CORNER MULLION CONNECTION TO EXISTING INTERMEDIATE FLOOR STRUCTURE W/ DEAD AND WIND LOAD ANCHORS (PLAN)

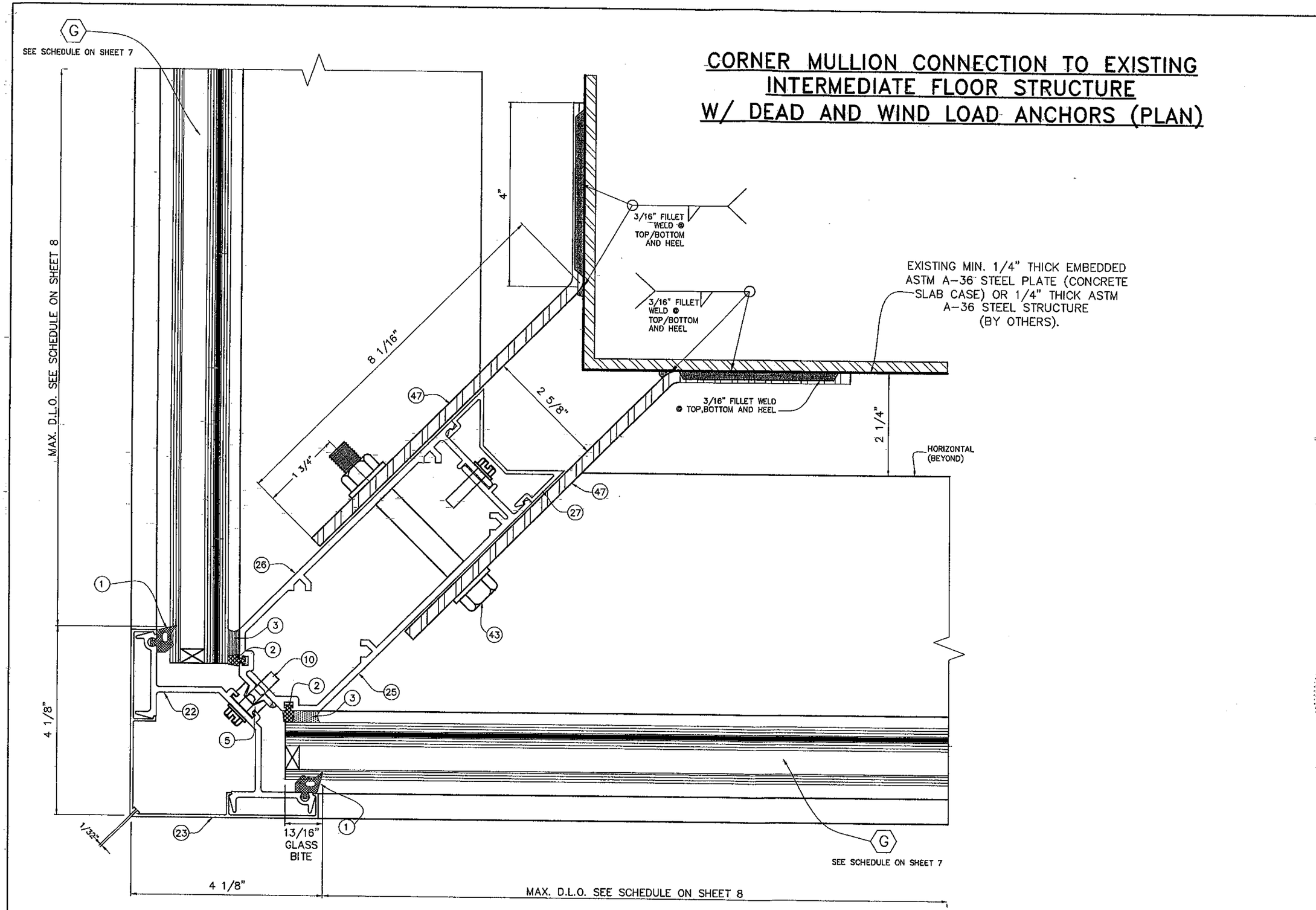

SECTION "E-E" @ CORNER MULLION

FLORIDA BUILDING CODE (High Velocity Hurricane Zone)

F.P./M.C.V./A.G. DRAWN BY

11/17/11 DATE

11-123 DRAWING No

SHEET 34 OF 36

HR-251 CAPTURED CURTAIN WALL SYSTEM
LARGE MISSILE IMPACT INSULATED GLASS

Oldcastle BuildingEnvelope™
803 Airport Rd - Terrell, TX 75160
www.OldcastleBE.com - Phone 800-869-4567

REV. No.	DESCRIPTION	DATE	REV. No.	DESCRIPTION	DATE
1	OLD 11-002	11/17/11	3	-	-
2	-	-	4	-	-

©2011 TILTECO, INC

TILTECO INC.
TILLIT TESTING & ENGINEERING COMPANY
6355 N.W. 36th. St., Ste. 305, VIRGINIA GARDENS, FLORIDA 33166
Phone : (305)871-1530 Fax : (305)871-1531
e-mail: tilteco@aol.com
EB-0006719
WALTER A. TILLIT Jr., P.E.
FLORIDA Lic. # 44167

WALTER A. TILLIT JR. LICENSE No. 44167 STATE OF FLORIDA PROFESSIONAL ENGINEER

1/18/12

P.E. SEAL/SIGNATURE/DATE

PRODUCT REVISED
as complying with the Florida
Building Code
Acceptance No 11-1206.08
Expiration Date DEC. 31 2014
By Miami Dade Product Control

MIAMI-DADE COUNTY

DOOR HEADER CONNECTION TO CURTAIN WALL HORIZONTALS

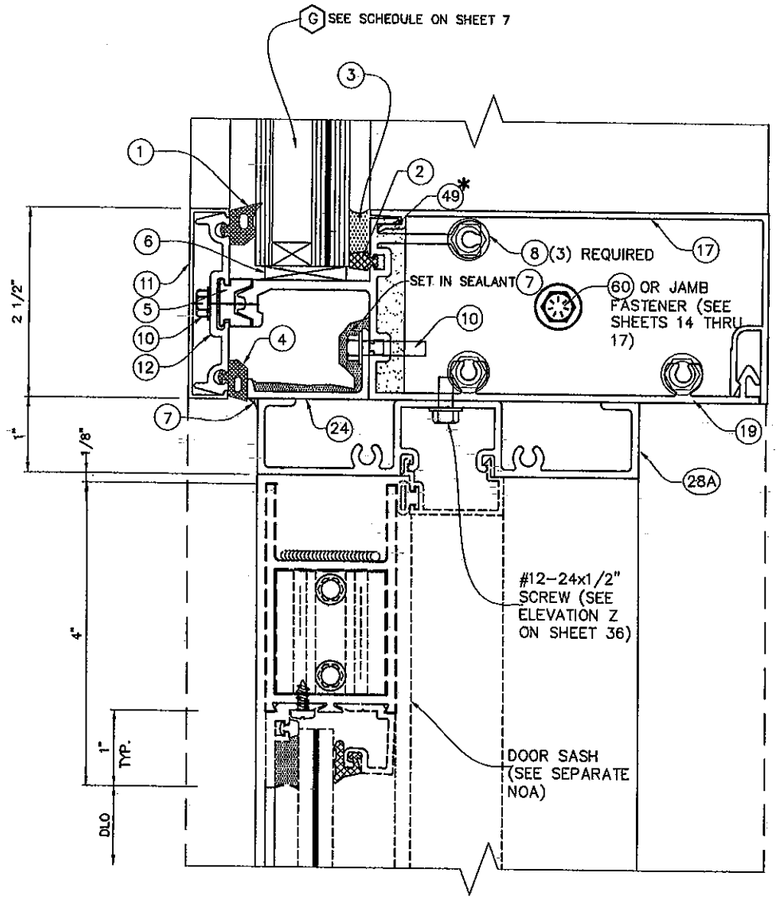

10
DR HEADER

DOOR SILL CONNECTION TO POURED CONCRETE STRUCTURE AND TO ADJACENT CURTAIN WALL MULLION "F" (SEE SHEET 9 FOR DEFINITION OF "F")

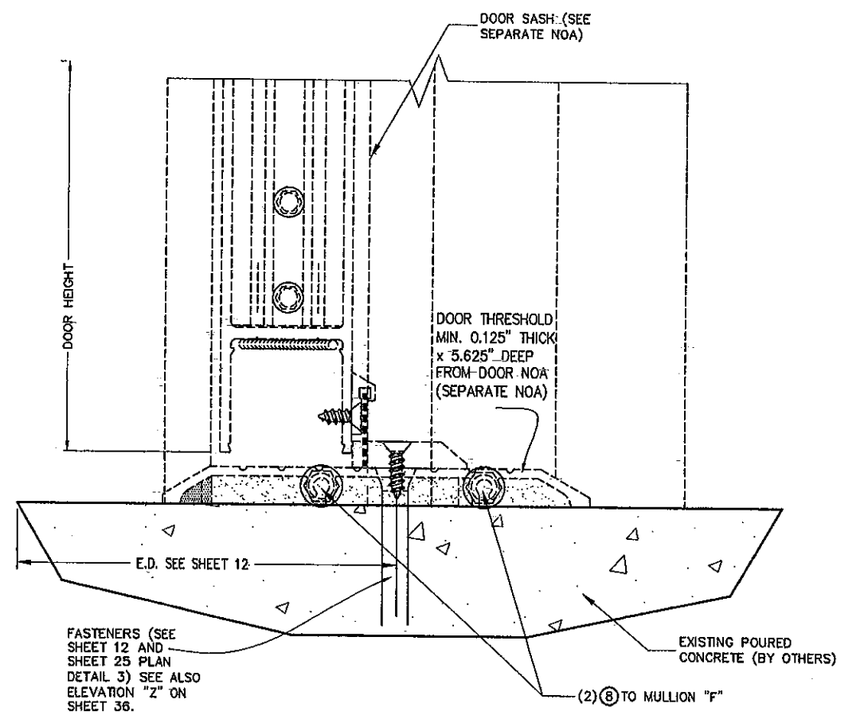

13
THRESHOLD

FLORIDA BUILDING CODE (High Velocity Hurricane Zone)

HR-251 CAPTURED CURTAIN WALL SYSTEM
LARGE MISSILE IMPACT INSULATED GLASS

Oldcastle BuildingEnvelope™
803 Airport Rd - Terrell, TX 75160
www.OldcastleBE.com - Phone 800-869-4567

REV. No	DESCRIPTION	DATE
1	OLD 11-002	11/17/11
2		
3	-	-
4	-	-

F.P./M.C.V./A.G.
DRAWN BY

11/17/11
DATE

11-123
DRAWING No

SHEET 35 OF 36

©2011 TILTECO, INC

TILTECO INC.
TILLIT TESTING & ENGINEERING COMPANY
6355 N.W. 36th. St., Ste. 305, VIRGINA GARDENS, FLORIDA 33166
Phone : (305)871-1530 , Fax : (305)871-1531
e-mail: tilteco@aol.com
EB-0006719
WALTER A. TILLIT Jr., P.E.
FLORIDA Lic. # 44167

WALTER A. TILLIT JR. LICENSE No. 44167 STATE OF FLORIDA PROFESSIONAL ENGINEER

P.E. SEAL/SIGNATURE/DATE

PRODUCT REVISED
as complying with the Florida Building Code
Acceptance No. 11-1206.08
Expiration Date DEC 9 2014
By Miami Dade Product Control

MIAMI-DADE COUNTY

DOOR JAMBS CONNECTION TO CURTAIN WALL

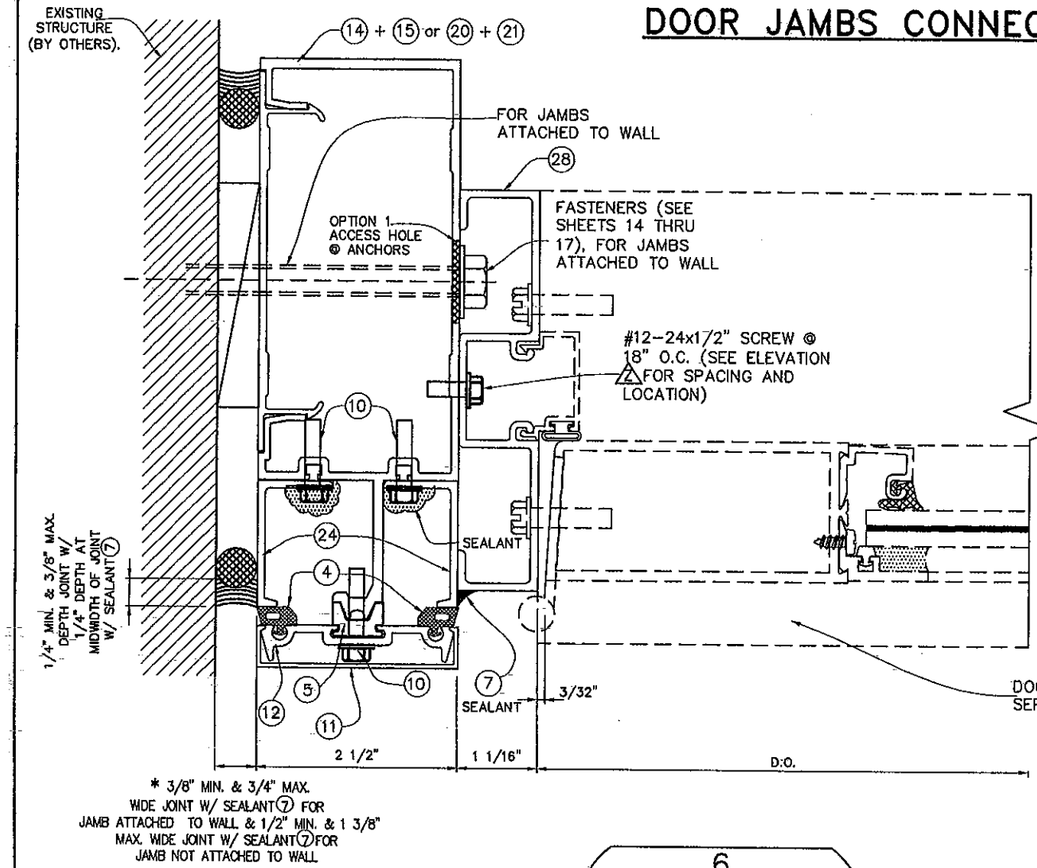

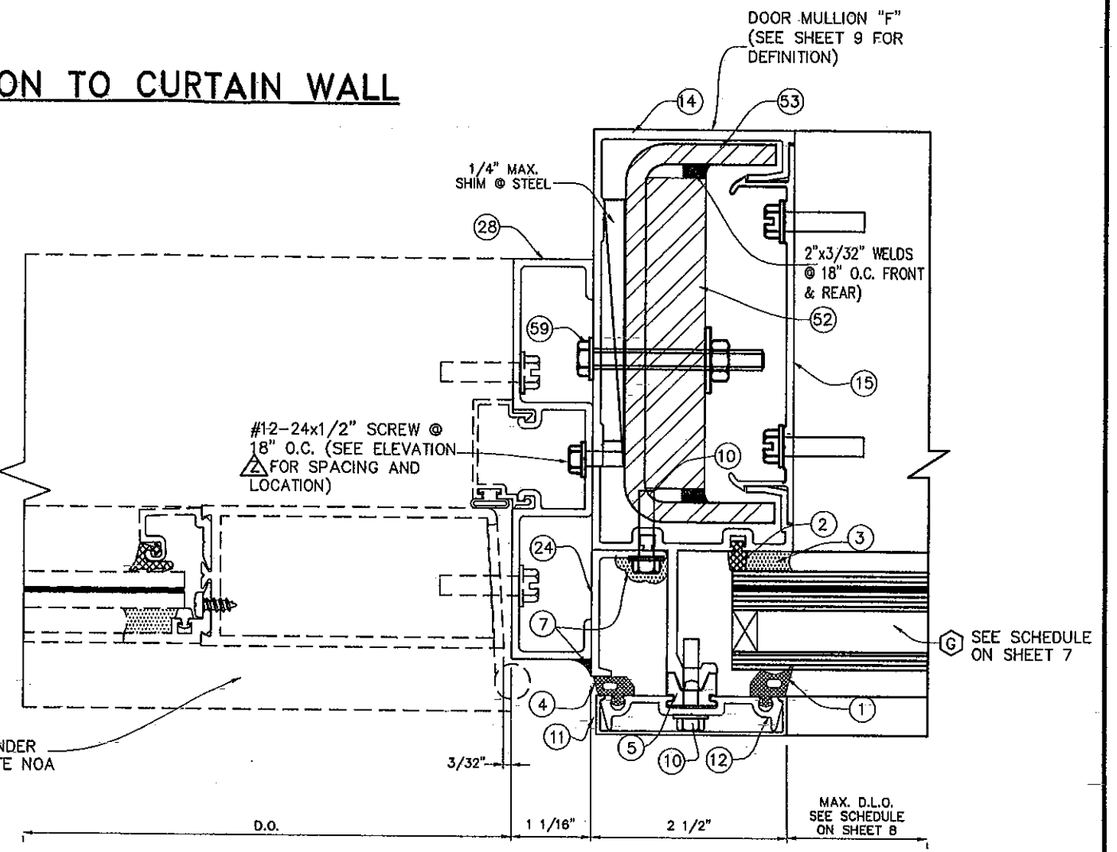

6

DOOR JAMB TO CURTAIN WALL JAMB

7

DOOR JAMB TO CURTAIN WALL DOOR MULLION

* NOTE: ABOVE INDICATED MAXIMUM AND MINIMUM VALUES FOR SPECIFIED SEALANT VERTICAL JOINT WIDTH AT JAMBS CONNECTED & NOT CONNECTED TO WALL (FREE STANDING) HAVE BEEN DETERMINED ONLY TAKING INTO CONSIDERATION THE ACTUAL MOVEMENT OF GLASS WALL AT JAMBS DUE TO THERMAL, WIND AND ITS OWN CONSTRUCTION TOLERANCE, AND NOT PERFORMANCE FACTORS FROM THE SURROUNDING STRUCTURE.

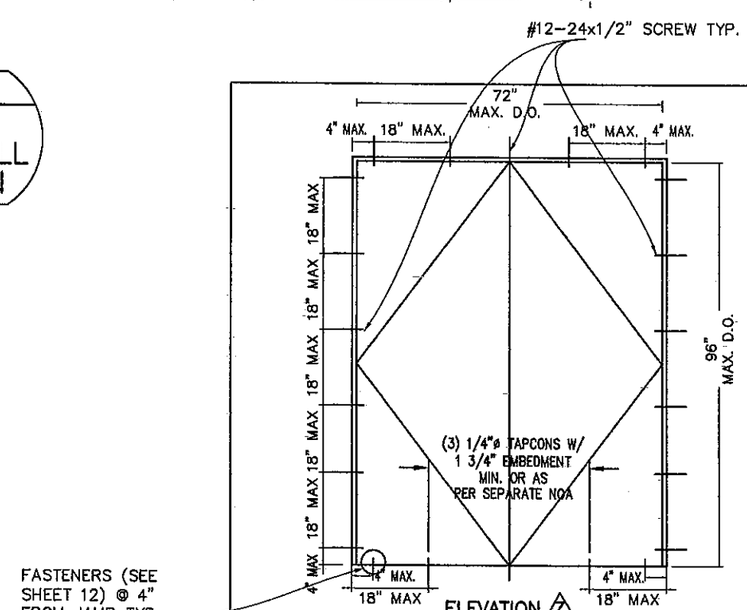

ELEVATION 2

LOCATIONS FOR DOOR FRAME ATTACHMENTS

ABOVE DIMENSIONS ARE MAXIMUM SIZES TESTED

FLORIDA BUILDING CODE (High Velocity Hurricane Zone)

©2011 TILTECO, INC

F.P./M.C.V./A.G. DRAWN BY

11/17/11 DATE

11-123 DRAWING No

SHEET 36 OF 36

HR-251 CAPTURED CURTAIN WALL SYSTEM LARGE MISSILE IMPACT INSULATED GLASS

Oldcastle BuildingEnvelope™
803 Airport Rd., Terrell, TX 75160
www.OldcastleBE.com - Phone 800-869-4567

REV. No	DESCRIPTION	DATE	REV. No	DESCRIPTION	DATE
1	OLD 11-002	11/17/11	3	-	-
2			4	-	-

TILTECO INC.
TILLIT TESTING & ENGINEERING COMPANY
6355 N.W. 36th St., Ste. 305, VIRGINIA GARDENS, FLORIDA 33166
Phone : (305)871-1530 Fax : (305)871-1531
e-mail: tilteco@aol.com
EB-0006719
WALTER A. TILLIT JR., P.E.
FLORIDA Lic. # 44167

WALTER A. TILLIT JR. LICENSE No. 44167 STATE OF FLORIDA PROFESSIONAL ENGINEER

P.E. SEAL/SIGNATURE/DATE

PRODUCT REVISED as complying with the Florida Building Code Acceptance No. 11-1206.08 Expiration Date DEC 2014

By Miami-Dade Product Control

MIAMI-DADE COUNTY