MIAMI-DADE COUNTY
DEPARTMENT OF PERMITTING, ENVIRONMENT, AND REGULATORY AFFAIRS (PERA)
BOARD AND CODE ADMINISTRATION DIVISION

MIAMI-DADE COUNTY
PRODUCT CONTROL SECTION
11805 SW 26 Street, Room 208
Miami, Florida 33175-2474
T (786) 315-2590 F (786) 315-2599
www.miamidade.gov/pera/

NOTICE OF ACCEPTANCE (NOA)

Oldcastle BuildingEnvelope™
803 Airport Road
Terrell, TX 75160

SCOPE:

This NOA is being issued under the applicable rules and regulations governing the use of construction materials. The documentation submitted has been reviewed and accepted by Miami-Dade County PERA - Product Control Section to be used in Miami Dade County and other areas where allowed by the Authority Having Jurisdiction (AHJ).

This NOA shall not be valid after the expiration date stated below. The Miami-Dade County Product Control Section (In Miami Dade County) and/or the AHJ (in areas other than Miami Dade County) reserve the right to have this product or material tested for quality assurance purposes. If this product or material fails to perform in the accepted manner, the manufacturer will incur the expense of such testing and the AHJ may immediately revoke, modify, or suspend the use of such product or material within their jurisdiction. PERA reserves the right to revoke this acceptance, if it is determined by Miami-Dade County Product Control Section that this product or material fails to meet the requirements of the applicable building code.

This product is approved as described herein, and has been designed to comply with the Florida Building Code, including the High Velocity Hurricane Zone.

DESCRIPTION: Series "HR-251 SSG Captured" Aluminum Curtain Wall System – L.M.I.

APPROVAL DOCUMENT: Drawing No. **11-125**, titled "HR-251 SSG Captured Curtain Wall System Large & Small Missile with Insulating Laminated Glass", sheets 1 thru 33 of 33, dated 11/18/11, with revision 1 dated 11/18/11, prepared by Tilteco, Inc., signed and sealed by Walter A. Tillit, Jr., P.E., bearing the Miami-Dade County Product Control Revision stamp with the Notice of Acceptance number and expiration date by the Miami-Dade County Product Control Section.

MISSILE IMPACT RATING: Large and Small Missile Impact Resistant

LABELING: Each unit shall bear a permanent label with the manufacturer's name or logo, city, state, model/series, and following statement: "Miami-Dade County Product Control Approved", unless otherwise noted herein.

RENEWAL of this NOA shall be considered after a renewal application has been filed and there has been no change in the applicable building code negatively affecting the performance of this product.

TERMINATION of this NOA will occur after the expiration date or if there has been a revision or change in the materials, use, and/or manufacture of the product or process. Misuse of this NOA as an endorsement of any product, for sales, advertising or any other purposes shall automatically terminate this NOA. Failure to comply with any section of this NOA shall be cause for termination and removal of NOA.

ADVERTISEMENT: The NOA number preceded by the words Miami-Dade County, Florida, and followed by the expiration date may be displayed in advertising literature. If any portion of the NOA is displayed, then it shall be done in its entirety.

INSPECTION: A copy of this entire NOA shall be provided to the user by the manufacturer or its distributors and shall be available for inspection at the job site at the request of the Building Official.

This NOA **revises NOA # 10-0331.07** and consists of this page 1 and evidence pages E-1, E-2, E-3 and E-4, as well as approval document mentioned above.

The submitted documentation was reviewed by **Manuel Perez, P.E.**

MIAMI-DADE COUNTY APPROVED

NOTICE OF ACCEPTANCE: EVIDENCE SUBMITTED

A. DRAWINGS

1. Manufacturer's die drawings and sections.
2. Drawing No **11-125**, Sheets 1 thru 33 of 33, titled "HR-251 SSG Captured Curtain Wall System Large & Small Missile with Insulating Laminated Glass", dated 11/18/11 with revision 1 dated 11/18/11, prepared by Tilteco, Inc., signed and sealed by Walter A. Tillit, Jr., P.E.

B. TESTS

1. Test reports on: 1) Air Infiltration Test, per FBC, TAS 202-94
   2) Uniform Static Air Pressure Test, Loading per FBC TAS 202-94
   3) Water Resistance Test, per FBC, TAS 202-94
   4) Large Missile Impact Test per FBC, TAS 201-94
   5) Cyclic Wind Pressure Loading per FBC, TAS 203-94

   along with marked-up drawings and installation diagram of Vistawall HR-251 SSG single-span, steel reinforced, captured curtain wall system, prepared by Hurricane Test Laboratory, LLC, Test Report No. **HTL-0105-0903-08**, specimen **#E2**, dated 12/15-17/08, signed and sealed by Vinu J. Abraham, P.E.
   (Submitted under previous NOA No. 10–0331.07)
2. Test reports on: 1) Air Infiltration Test, per FBC, TAS 202-94
   2) Uniform Static Air Pressure Test, Loading per FBC TAS 202-94
   3) Water Resistance Test, per FBC, TAS 202-94
   4) Small Missile Impact Test per FBC, TAS 201-94
   5) Large Missile Impact Test per FBC, TAS 201-94
   6) Cyclic Wind Pressure Loading per FBC, TAS 203-94

   along with marked-up drawings and installation diagram of Vistawall HR-251 SSG twin-span, steel reinforced, captured curtain wall system, prepared by Hurricane Test Laboratory, LLC, Test Report No. **HTL-0105-0903-08**, specimen **#E6**, dated 09/18-10/08, 2008, signed and sealed by Vinu J. Abraham, P.E.
   (Submitted under previous NOA No. 10–0331.07)
3. Test reports on: 1) Large Missile Impact Test per FBC, TAS 201-94
   2) Cyclic Wind Pressure Loading per FBC, TAS 203-94

   along with marked-up drawings and installation diagram of Vistawall HR-251 SSG single-span, steel reinforced, captured curtain wall system, prepared by Hurricane Test Laboratory, LLC, Test Report No. **HTL-0105-0903-08**, specimen **#E6A**, dated 12/18/08, signed and sealed by Vinu J. Abraham, P.E.
   (Submitted under previous NOA No. 10–0331.07)

Manuel Perez, P.E.
Product Control Examiner
NOA No. 11-1206.09
Expiration Date: February 17, 2016
Approval Date: February 23, 2012

NOTICE OF ACCEPTANCE: EVIDENCE SUBMITTED

B. TESTS (CONTINUED)

4. Test reports on: 1) Uniform Static Air Pressure Test, Loading per FBC TAS 202-94
2) Large Missile Impact Test per FBC, TAS 201-94
3) Cyclic Wind Pressure Loading per FBC, TAS 203-94
along with marked-up drawings and installation diagram of Vistawall HR-251 SSG single-span, non-reinforced, captured curtain wall system, prepared by Hurricane Test Laboratory, LLC, Test Report No. **HTL-0105-0903-08**, specimen **#E8**, dated 12/15-16/08, signed and sealed by Vinu J. Abraham, P.E.
(Submitted under previous NOA No. 10–0331.07)

5. Test reports on: 1) Air Infiltration Test, per FBC, TAS 202-94
2) Uniform Static Air Pressure Test, Loading per FBC TAS 202-94
3) Water Resistance Test, per FBC, TAS 202-94
4) Large Missile Impact Test per FBC, TAS 201-94
5) Cyclic Wind Pressure Loading per FBC, TAS 203-94
along with marked-up drawings and installation diagram of Vistawall HR-251 SSG twin-span, steel reinforced, captured curtain wall system, prepared by Hurricane Test Laboratory, LLC, Test Report No. **HTL-0105-0117-05**, specimen **#1**, dated 04/07-23/05, signed and sealed by Vinu J. Abraham, P.E.
(Submitted under previous NOA No. 10–0331.07)

6. Test reports on: 1) Air Infiltration Test, per FBC, TAS 202-94
2) Uniform Static Air Pressure Test, Loading per FBC TAS 202-94
3) Water Resistance Test, per FBC, TAS 202-94
4) Large Missile Impact Test per FBC, TAS 201-94
5) Cyclic Wind Pressure Loading per FBC, TAS 203-94
along with marked-up drawings and installation diagram of Vistawall HR-251 SSG single-span, non-reinforced, captured curtain wall system, prepared by Hurricane Test Laboratory, LLC, Test Report No. **HTL-0105-0117-05**, specimen **#E3**, dated 09/08-13/05, signed and sealed by Vinu J. Abraham, P.E.
(Submitted under previous NOA No. 10–0331.07)

7. Test reports on: 1) Air Infiltration Test, per FBC, TAS 202-94
2) Uniform Static Air Pressure Test, Loading per FBC TAS 202-94
3) Water Resistance Test, per FBC, TAS 202-94
4) Large Missile Impact Test per FBC, TAS 201-94
5) Cyclic Wind Pressure Loading per FBC, TAS 203-94
along with marked-up drawings and installation diagram of Vistawall HR-251 SSG twin-span, steel reinforced, captured curtain wall system, prepared by Hurricane Test Laboratory, LLC, Test Report No. **HTL-0105-0177-05**, specimen **#E4**, dated 09/09-13/05, signed and sealed by Vinu J. Abraham, P.E.
(Submitted under previous NOA No. 10–0331.07)

Manuel Perez, P.E.
Product Control Examiner
NOA No. 11-1206.09
Expiration Date: February 17, 2016
Approval Date: February 23, 2012

NOTICE OF ACCEPTANCE: EVIDENCE SUBMITTED

B. TESTS (CONTINUED)

8. Test reports on: 1) Air Infiltration Test, per FBC, TAS 202-94
2) Uniform Static Air Pressure Test, Loading per FBC TAS 202-94
3) Large Missile Impact Test per FBC, TAS 201-94
4) Cyclic Wind Pressure Loading per FBC, TAS 203-94
along with marked-up drawings and installation diagram of Vistawall HR-251 SSG single span, unreinforced, captured curtain wall system, prepared by Hurricane Test Laboratory, LLC, Test Report No. **HTL-0105-0177-05**, specimen **#E5**, dated 05/10-11/05, signed and sealed by Vinu J. Abraham, P.E.
(Submitted under previous NOA No. 10–0331.07)

9. Test reports on: 1) Uniform Static Air Pressure Test, Loading per FBC TAS 202-94
2) Large Missile Impact Test per FBC, TAS 201-94
3) Cyclic Wind Pressure Loading per FBC, TAS 203-94
along with marked-up drawings and installation diagram of Vistawall MSD-375 doors, 72" x 96", prepared by Hurricane Test Laboratory, LLC, Test Report No. **HTL-0105-0210-04**, specimen **#E-1**, dated 02/09/04, signed and sealed by Vinu J. Abraham, P.E.
(Submitted under previous NOA No. 10–0331.07)

10. Test reports on: 1) Small Missile Impact Test per FBC, TAS 201-94
2) Cyclic Wind Pressure Loading per FBC, TAS 203-94
along with marked-up drawings and installation diagram of Vistawall HR-251 single-span, reinforced, captured curtain wall system, prepared by Architectural Testing, Inc., Test Report No. **ATITX-96930.01-801-18**, specimens **#1 & #2**, dated 02/15/10, signed and sealed by Joseph A. Reed, P.E. ***(For Reference Only)***
(Submitted under previous NOA No. 10–0331.07)

11. Test reports on: 1) Air Infiltration Test, per FBC, TAS 202-94
2) Uniform Static Air Pressure Test, Loading per FBC TAS 202-94
3) Water Resistance Test, per FBC, TAS 202-94
4) Large Missile Impact Test per FBC, TAS 201-94
5) Cyclic Wind Pressure Loading per FBC, TAS 203-94
along with marked-up drawings and installation diagram of Vistawall HR-251 wet glazed, steel reinforced, captured curtain wall system, prepared by Architectural Testing, Inc., Test Report No. **ATITX-A4707.01-801-18**, dated 11/16/10, signed and sealed by Shawn G. Collins, P.E. ***(For Reference Only)***
(Submitted under previous NOA No. 10–0331.07)

Manuel Perez, P.E.
Product Control Examiner
NOA No. 11-1206.09
Expiration Date: February 17, 2016
Approval Date: February 23, 2012

NOTICE OF ACCEPTANCE: EVIDENCE SUBMITTED

C. CALCULATIONS

1. Anchor verification calculations and structural analysis, complying with FBC-2007 and FBC-2010, prepared by Tilteco, Inc., dated 1/14/10, additional complementary calculations, dated 06/02/10, and updated on 12/05/11, all signed and sealed by Walter A. Tillit, Jr., P.E.
2. Glazing complies with ASTM E1300-04

D. QUALITY ASSURANCE

1. Miami-Dade Department of Permitting, Environment, and Regulatory Affairs (PERA).

E. MATERIAL CERTIFICATIONS

1. Notice of Acceptance No. **08-1224.04** issued to Solutia Inc. for their **"Saflex Composite Glass Interlayer with PET Core"** dated 02/25/09, expiring on 12/11/13.
2. Notice of Acceptance No. **11–0325.05** " issued to Solutia, Inc. for their "Saflex and Vanceva clear and color interlayers" dated 05/05/11, expiring on 05/21/16

F. STATEMENTS

1. Statement letter of conformance, complying with FBC-2010, dated December 05, 2011, signed and sealed by Walter A. Tillit, Jr., P.E.
2. Statement letter of no financial interest, dated February 21, 2011, signed and sealed by Walter A. Tillit, Jr., P.E.
3. Statement letter of name change and Asset sale agreement from Oldcastle Glass Engineered Products to Oldcastle BuildingEnvelope, Inc.
   (Submitted under previous NOA No. 10–0331.07)
4. Laboratory compliance letter for Test Report No. **HTL-0105-0117-05** and **HTL-0105-0903-08,** issued by Hurricane Test Laboratory, LLC, Inc., dated 03/23/05, signed and sealed by Vinu J. Abraham, P.E.
   (Submitted under previous NOA No. 10–0331.07)
5. Laboratory compliance letter for Test Report No. **HTL-0105-0210-04, HTL-0105-0511-04, HTL-0105-0306-04, HTL-0105-0717-04 and HTL-0105-0809-03,** issued by Hurricane Test Laboratory, LLC, Inc., dated 12/10/04, signed and sealed by Vinu J. Abraham, P.E.
   (Submitted under previous NOA No. 10–0331.07)

G. OTHERS

1. Notice of Acceptance No. **10-0331.07**, issued to Oldcastle Building Envelope™ for their Series "HR-251 SSG Captured" Aluminum Curtain Wall System – L.M.I., approved on 02/17/11 and expiring on 02/17/16.

Manuel Perez, P.E.
Product Control Examiner
NOA No. 11-1206.09
Expiration Date: February 17, 2016
Approval Date: February 23, 2012

PRODUCT APPROVAL FOR HR-251 SSG IMPACT-RESISTANT CAPTURED CURTAIN WALL SYSTEM WITH INSULATING LAMINATED GLASS FOR USE IN HURRICANE ZONES REQUIRING LARGE AND SMALL MISSILE IMPACT PROTECTION.

GENERAL NOTES:

1. HR-251 SSG CAPTURED CURTAIN WALL SYSTEM LARGE AND SMALL MISSILE WITH INSULATING LAMINATED GLASS, SHOWN ON THIS PRODUCT APPROVAL DOCUMENT (P.A.D.) HAS BEEN VERIFIED FOR COMPLIANCE IN ACCORDANCE WITH THE 2007 & 2010 EDITIONS OF THE FLORIDA BUILDING CODE.
   CURTAIN WALL MAY BE INSTALLED WITHIN HIGH VELOCITY HURRICANE ZONES.

   DESIGN WIND LOADS SHALL BE DETERMINED AS PER SECTION 1620 OF THE ABOVE MENTIONED CODES, USING ASCE 7-05 STANDARD FOR INSTALLATIONS UNDER 2007 FBC & ASCE 7-10 FOR INSTALLATIONS UNDER 2010 FBC AND SHALL NOT EXCEED THE MAXIMUM (A.S.D.) DESIGN PRESSURE RATINGS INDICATED ON NOTE 2. IN ORDER TO VERIFY THE ABOVE CONDITION, ULTIMATE DESIGN WIND LOADS DETERMINED PER ASCE 7-10 SHALL BE FIRST REDUCED TO A.S.D. DESIGN WIND LOADS BY MULTIPLYING THEM BY 0.6 IN ORDER TO TO COMPARE THESE W/ MAX. (A.S.D) DESIGN PRESSURE RATINGS INDICATED ON NOTE 2.

   IN ORDER TO VERIFY THAT ANCHORS ON THIS P.A.D., AS TESTED, WERE NOT OVERSTRESSED, A 33% INCREASE IN ALLOWABLE STRESS FOR WIND LOADS WAS **NOT** USED IN THEIR ANALYSIS.
   THIS PRODUCT'S ADEQUACY FOR IMPACT AND WIND RESISTANCE HAS BEEN VERIFIED IN ACCORDANCE WITH SECTION 1626 OF THE ABOVE MENTIONED CODES AS PER PROTOCOLS TAS-201, TAS-202, TAS-203, PER HURRICANE TEST LABORATORY REPORTS # 0105-0117-05 AND 0105-0210-04 (DOOR JAMB MULLION CERTIFICATION) AND PER ARCHITECTURAL TESTING LAB REPORT #A4707.01-801-18 AND AS PER SUBMITTED STRUCTURAL CALCULATIONS, PERFORMED AS PER SECTION 1612 OF THE FLORIDA BUILDING CODE.

2. MAXIMUM A.S.D. DESIGN PRESSURE RATING FOR THIS CURTAIN WALL SHALL BE AS SHOWN ON SHEETS 8, 9, 10, 12, 13, 14 & 15.

3. THIS PRODUCT IS RATED FOR LARGE AND SMALL MISSILE IMPACT RESISTANCE. HURRICANE PROTECTION DEVICE IS NOT REQUIRED.

4. THIS PRODUCT IS APPROVED FOR AIR/WATER INFILTRATION (15.0 PSF WATER PRESSURE).

5. HR-251 SSG CAPTURED CURTAIN WALL SYSTEM LARGE AND SMALL MISSILE WITH INSULATING LAMINATED GLASS SHALL COMPLY WITH SECTIONS 2406.1, 2411.4.1 AND 2411.4.2 OF THE FLORIDA BUILDING CODE.

6. ALL JOINT WELDING BETWEEN ANGLES AND STEEL STRUCTURE SHALL BE 3/16" FILLET WELD TYPE AND SHALL BE WELDED IN ACCORDANCE WITH THE AMERICAN WELDING SOCIETY A.W.S. D.1.1 REGULATIONS. USE CERTIFIED WELDERS. USE E-70XX ELECTRODES.

7. PROVIDE 3/4" MAX. LOAD BEARING SHIM (TYP.), WHEN ALLOWED BY THIS P.A.D.

8. SEE ANCHOR SCHEDULES ON SHEETS 12 THRU 15 FOR ANCHOR TYPE IDENTIFICATION AND SPACING.

9. REMAINING COMPONENTS FOR THIS CURTAIN WALL SYSTEM SHALL BE AS INDICATED ON BILL OF MATERIALS, SHEETS 4 AND 5 OF THIS DRAWING.

10. ALL ALUMINUM EXTRUSIONS IN CONTACT WITH STEEL AND CONCRETE SHALL COMPLY WITH SECTIONS 2003.8.4.2 AND 2003.8.4.4 OF THE FLORIDA BUILDING CODE, RESPECTIVELY.

11. SHOP DRAWINGS PREPARED BASED ON THIS P.A.D. AND TAKING INTO ACCOUNT THE SPECIFIC JOB CONDITIONS, SHALL BE SUBMITTED TO THE BUILDING OFFICIAL AS PART OF THE PERMIT DOCUMENTS.

12. SUBSTRATE MATERIAL NOTED ON THIS DRAWING AS "BY OTHERS" MUST WITHSTAND THE LOADS IMPOSED BY BY THE CURTAIN WALL SYSTEM.

13. (a) THIS P.A.D. PREPARED BY THIS ENGINEER IS GENERIC AND DOES NOT PROVIDE INFORMATION FOR A SITE SPECIFIC PROJECT; i.e. WHERE THE SITE CONDITIONS DEVIATE FROM THE P.A.D.

    (b) CONTRACTOR TO BE RESPONSIBLE FOR THE SELECTION, PURCHASE AND INSTALLATION INCLUDING LIFE SAFETY OF THIS PRODUCT, BASED ON THIS P.A.D., PROVIDED HE/SHE DOES NOT DEVIATE FROM THE CONDITIONS DETAILED ON THIS DOCUMENT. CONSTRUCTION SAFETY AT SITE IS THE CONTRACTOR'S RESPONSIBILITY.

    (c) THIS P.A.D. WILL BE CONSIDERED INVALID IF ALTERED BY ANY MEANS.

    (d) SITE SPECIFIC PROJECTS SHALL BE PREPARED BY A FLORIDA REGISTERED ENGINEER OR ARCHITECT WHICH WILL BECOME THE ENGINEER OF RECORD (E.O.R.) FOR THE PROJECT AND WHO WILL BE RESPONSIBLE FOR THE PROPER USE OF THE P.A.D. ENGINEER OF RECORD, ACTING AS DELEGATED ENGINEER TO THE P.A.D. ENGINEER, SHALL SUBMIT TO THIS LATTER THE SITE SPECIFIC DRAWINGS FOR REVIEW.

    (e) ORIGINAL P.A.D. SHALL BEAR THE DATE AND ORIGINAL SEAL AND SIGNATURE OF THE PROFESSIONAL ENGINEER OF RECORD THAT PREPARED IT.

14. CURTAIN WALL MANUFACTURER'S LABEL SHALL BE PLACED ON A READILY VISIBLE LOCATION. ONE LABEL SHALL BE PLACED FOR EVERY UNIT. LABEL SHALL READ AS FOLLOWS:

    Oldcastle
    BuildingEnvelope™
    TERRELL TX.
    MIAMI-DADE COUNTY PRODUCT CONTROL APPROVED.

INDEX:

SHEET 1: GENERAL NOTES, INDEX AND INSTRUCTIONS.
SHEET 2: HR-251 SSG CAPTURED CURTAIN WALL SYSTEM LARGE & SMALL MISSILE W/ INSULATING LAMINATED GLASS COMPONENTS.
SHEET 3: HR-251 SSG CAPTURED CURTAIN WALL SYSTEM LARGE & SMALL MISSILE W/ INSULATING LAMINATED GLASS COMPONENTS (CONTINUED).
SHEET 4: BILL OF MATERIALS.
SHEET 5: BILL OF MATERIALS (CONTINUED).
SHEET 6: ISOMETRIC ELEVATION FOR HR-251 SSG CAPTURED CURTAIN WALL SYSTEM LARGE & SMALL MISSILE W/ INSULATING LAMINATED GLASS.
SHEET 7: TYPICAL GLAZING DETAILS.
SHEET 8: MAX. FRAME WIDTH "b" & FRAME LENGTH "a" VERSUS A.S.D. DESIGN PRESSURE RATING (p.s.f.) SCHEDULE.
SHEET 9: MAX. A.S.D. DESIGN PRESSURE RATING FOR SINGLE SPAN SSG AND CORNER MULLIONS.
SHEET 10: MAX. A.S.D. DESIGN PRESSURE RATING FOR TWIN SPAN SSG AND CORNER MULLIONS.
SHEET 11: OPTIONS FOR TWIN SPAN SSG AND CORNER MULLIONS INSTALLATION.
SHEET 12: MAX. A.S.D. DESING PRESSURE RATING FOR SINGLE SPAN (HEAD & SILL) & TWIN SPAN (SILL ONLY) MULLION CONNECTIONS.
SHEET 13: MAX. A.S.D. DESIGN PRESSURE RATING FOR TWIN SPAN MULLION HEAD ANCHOR CONNECTIONS.
SHEET 14: MAX. A.S.D. DESIGN PRESSURE RATING FOR JAMBS AT SINGLE SPAN CURTAIN WALL FASTENED W/ 3/8"ø & 1/2"ø FASTENERS.
SHEET 15: MAX. A.S.D. DESIGN PRESSURE RATING FOR JAMBS AT TWIN SPAN CURTAIN WALL FASTENED W/ 3/8"ø & 1/2"ø FASTENERS
SHEET 16: HEAD CONNECTION DETAILS (SIDE VIEWS).
SHEET 17: HORIZONTAL CONNECTION DETAILS (SIDE VIEWS) & SILL CONNECTION DETAILS (SIDE VIEWS).
SHEET 18: HORIZONTAL SECTIONS AT SSG MULLION DETAILS (PLAN).
SHEET 19: JAMB CONNECTIONS AT HORIZONTALS (PLAN).
SHEET 20: CORNER MULLION DETAILS (PLAN).
SHEET 21: JAMBS CONNECTIONS AT INSIDE CORNER (PLAN).
SHEET 22: SILL & HEAD CONNECTION DETAILS FOR SINGLE SPAN & SILL CONNECTION DETAIL AT TWIN SPAN (PLANS).
SHEET 23: OPTION #1 FOR HEAD CONNECTION OF TWIN SPAN SSG MULLIONS.
SHEET 24: OPTION #2 FOR HEAD CONNECTION OF TWIN SPAN SSG MULLIONS.
SHEET 25: HEAD CONNECTION AT TWIN SPAN JAMBS.
SHEET 26: HEAD CONNECTION DETAIL FOR TWIN SPAN CORNER MULLION,
SHEET 27: MULLION AND JAMB SPLICES AT TWIN SPAN ONLY (PLAN).
SHEET 28: MULLION AND JAMB SPLICES AT TWIN SPAN ONLY (SIDE VIEW)
SHEET 29: CORNER MULLION SPLICE FOR TWIN SPAN ONLY (PLAN).
SHEET 30: SSG AND CORNER MULLIONS CONNECTION TO EXISTING INTERMEDIATE FLOOR STRUCTURE W/ DEAD OR WIND LOAD ANCHORS.
SHEET 31: CORNER MULLION CONNECTION TO EXISTING INTERMEDIATE FLOOR STRUCTURE W/ DEAD OR WIND LOAD ANCHORS (PLAN).
SHEET 32: DOOR HEADER CONNECTION TO CURTAIN WALL HORIZONTALS AND DOOR SILL CONNECTION TO POURED STRUCTURE AND TO ADJACENT CURTAIN WALL DOOR JAMB MULLION.
SHEET 33: DOOR JAMBS CONNECTION TO CURTAIN WALL.

INSTRUCTIONS:

STEP 1: DETERMINE A.S.D. DESIGN WIND LOAD REQUIREMENTS BASED ON WIND VELOCITY, BUILDING HEIGHT, WIND ZONE, USING APPLICABLE ASCE 7 STANDARDS.

STEP 2: GO TO SCHEDULE ON SHEET 8 TO DETERMINE MAXIMUM A.S.D. DESIGN PRESSURE RATING (psf) OF DESIRED GLASS SIZE BASED ON GLASS PANEL DIMENSIONS.

STEP 3: DETERMINE MAXIMUM MULLION AND JAMB SPAN "L"(FT) FOR A GIVEN MULLION EFFECTIVE SPACING "b", FOR SINGLE AND TWIN SPANS ON SCHEDULES ON SHEETS 9 AND 10.

STEP 4: USING SCHEDULES ON SHEETS 12 THRU 15 SELECT ANCHOR OPTION FOR MULLIONS AND JAMBS WITH A.S.D. DESIGN PRESSURE RATING EQUAL OR GRATER THAN A.S.D. DESIGN LOAD SPECIFIED IN STEP 1.

STEP 5: THE LOWEST VALUE OF A.S.D. DESIGN PRESSURE RATING RESULTING FROM STEPS 2, 3 & 4 SHALL APPLY TO THE ENTIRE SYSTEM.

FLORIDA BUILDING CODE (High Velocity Hurricane Zone)

HR-251 SSG CAPTURED CURTAIN WALL SYSTEM LARGE & SMALL MISSILE WITH INSULATING LAMINATED GLASS

M.C.V./A.G. DRAWN BY

11/18/11 DATE

11-125 DRAWING No

SHEET 1 OF 33

Oldcastle BuildingEnvelope™
803 Airport Rd - Terrell, TX 75160
www.OldcastleBE.com - Phone 800-869-4567

REV. No	DESCRIPTION	DATE	REV. No	DESCRIPTION	DATE
1	OLD 10-914	11/18/11	-	-	-
-	-	-	-	-	-

©2010 TILTECO, INC

TILTECO INC.
TILLIT TESTING & ENGINEERING COMPANY
6355 N.W. 36th. St. Ste. 305, VIRGINIA GARDENS, FL 33166
Phone : (305)871-1530 . Fax : (305)871-1531
e-mail: tilteco@aol.com
EB-0006719
WALTER A. TILLIT Jr. P.E.
FLORIDA Lic. # 44167

WALTER A. TILLIT JR. LICENSE No 44167 STATE OF FLORIDA PROFESSIONAL ENGINEER

P.E. SEAL/SIGNATURE/DATE

PRODUCT REVISED
as complying with the Florida Building Code
Acceptance No 11-1206.09
Expiration Date FEB. 17, 2016
By Miami Dade Product Control

MIAMI-DADE COUNTY

HR-251 SSG CAPTURED CURTAIN WALL SYSTEM LARGE & SMALL MISSILE W/ INSULATING LAMINATED GLASS COMPONENTS

SCALE : 1/4" = 1" (EXCEPT AS NOTED)

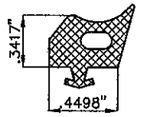

① EXTERIOR GLAZING GASKET
GP-118
SCALE : 1" = 1"

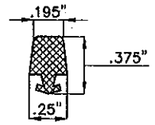

② INTERIOR SPACER GASKET
FG-5185
SCALE : 1" = 1"

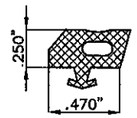

④ EXTERIOR PERIMETER GASKET
GP-103
SCALE : 1" = 1"

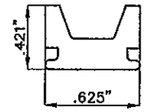

⑤ THERMAL ISOLATOR
CW-6H
SCALE : 1" = 1"

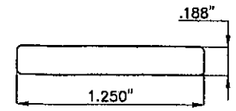

⑥ SETTING BLOCK
CW-2102
SCALE : 1" = 1"

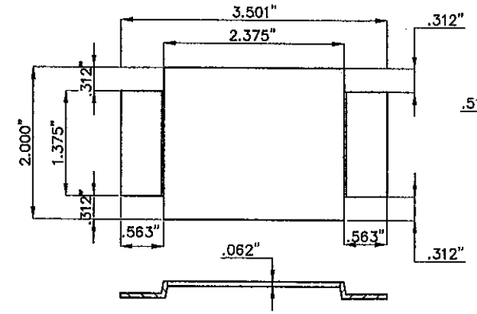

㉝ MULLION END CAP
HR-FP-4
SCALE : 1/2" = 1"

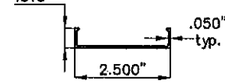

⑫ FACE CAP
CW-2

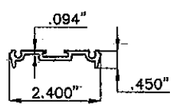

⑬ PRESSURE BAR
ZG-60

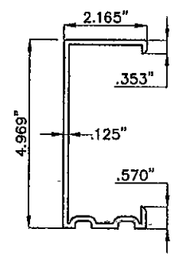

⑭ JAMB MULLION SPLICE
CW-1991

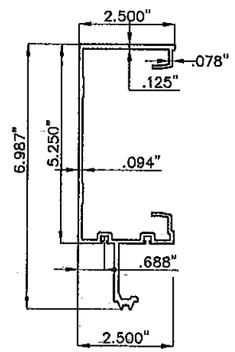

⑮ JAMB MULLION
CW-2023

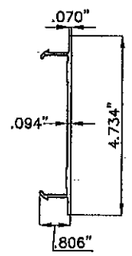

⑯ MULLION FILLER
CW-1996

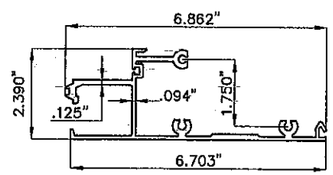

⑰ HEAD/SILL
CW-2024

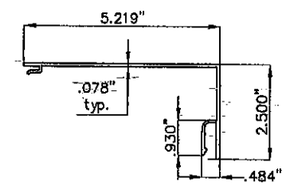

⑱ HEAD/SILL/HORIZONTAL TRIM
CW-1998

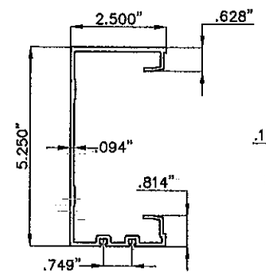

⑲ SSG MULLION
CW-1999

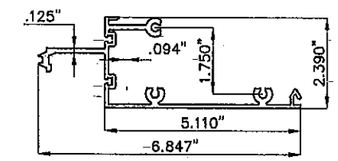

⑳ OPEN BACK HORIZONTAL
CW-2156

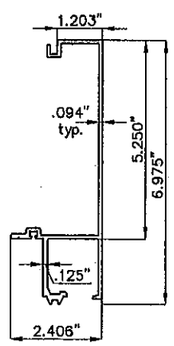

㉑ TWO PIECE JAMB
FEMALE HALF
CW-2026

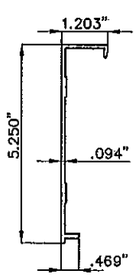

㉒ TWO PIECE JAMB
MALE HALF
CW-2002

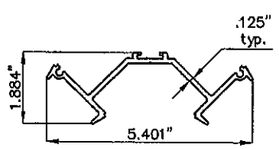

㉓ CORNER PRESSURE PLATE
CW-2183

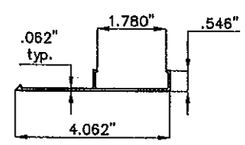

㉔ CORNER FACE CAP
CW-2188

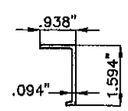

㉕ POCKET FILLER
CW-691

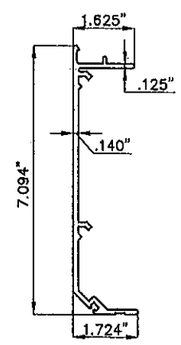

㉖ CORNER MULLION
FEMALE HALF
CW-2018

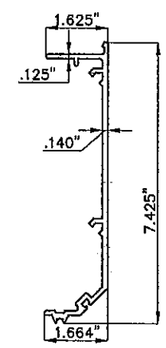

㉗ CORNER MULLION
MALE HALF
CW-2019

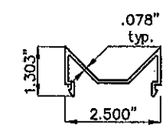

㉘ MULLION FILLER
CW-2020

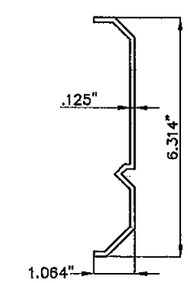

㉙ CORNER SPLICE
CW-2021

FLORIDA BUILDING CODE (High Velocity Hurricane Zone)

M.C.V./A.G. DRAWN BY	11/18/11 DATE
11-125 DRAWING No	SHEET 2 OF 33

HR-251 SSG CAPTURED CURTAIN WALL SYSTEM LARGE & SMALL MISSILE WITH INSULATING LAMINATED GLASS

Oldcastle BuildingEnvelope™
803 Airport Rd - Terrell, TX 75160
www.OldcastleBE.com - Phone 800-869-4567

REV. No	DESCRIPTION	DATE
1	OLD 10-014	11/18/11

REV. No	DESCRIPTION	DATE
-	-	-
-	-	-

©2010 TILTECO, INC

TILTECO INC.
TILLIT TESTING & ENGINEERING COMPANY
6355 N.W. 36th. St. Ste. 305, VIRGINIA GARDENS, FL 33166
Phone : (305)871-1530 , Fax : (305)871-1531
e-mail: tilteco@aol.com
EB-0006719
WALTER A. TILLIT Jr. P.E.
FLORIDA Lic. # 44167

WALTER A. TILLIT JR. LICENSE No 44167 STATE OF FLORIDA PROFESSIONAL ENGINEER

P.E. SEAL/SIGNATURE/DATE

PRODUCT REVISED
as complying with the Florida Building Code
Acceptance No 11-1206.09
Expiration Date FEB. 17, 2016
By Miami Dade Product Control

MIAMI-DADE COUNTY

HR-251 SSG CAPTURED CURTAIN WALL SYSTEM LARGE & SMALL MISSILE W/ INSULATING LAMINATED GLASS COMPONENTS (CONTINUED)

SCALE : 1/4" = 1" (EXCEPT AS NOTED)

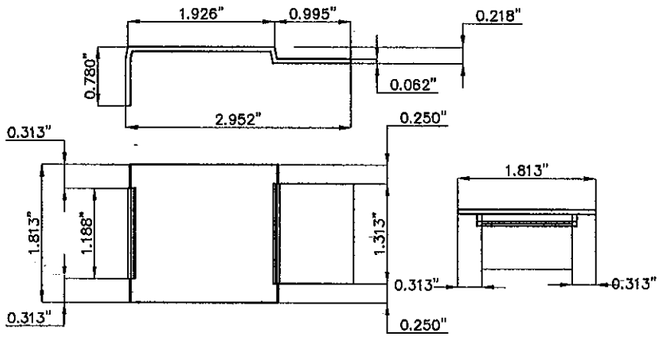

(30) LEFT & RIGHT JAMB END CAP HR-FP-5
SCALE : 1/2" = 1"

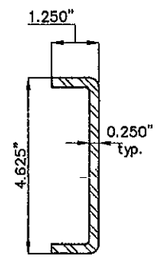

(31) STEEL REINFORCING FG5000-PP-8

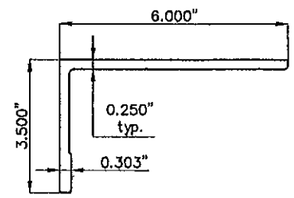

(33) HEAD ANCHOR LEFT HR-FP-24

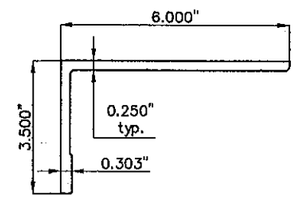

(33A) HEAD ANCHOR RIGHT HR-FP-25

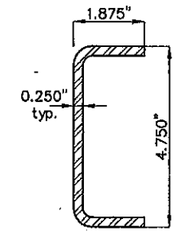

(34) STEEL REINFORCING RS-25

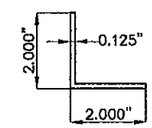

(35) EXTRUDED ANGLE AN-52

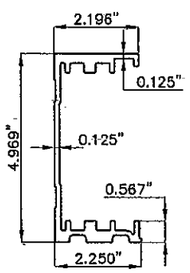

(36) HEAD ANCHOR SLEEVE HR-FP-15

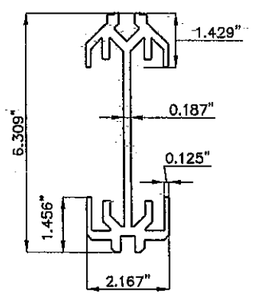

(37) HEAD ANCHOR SLEEVE CORNER HR-FP-17

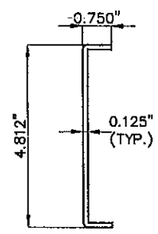

(38) BREAK METAL SPLICE HR-FP-13

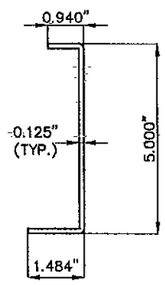

(39) BRAKE METAL SPLICE HR-FP-14

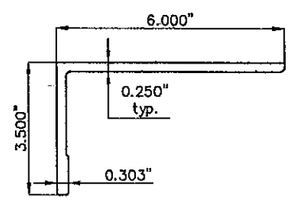

(44) HEAD ANCHOR CORNER LEFT HR-FP-22

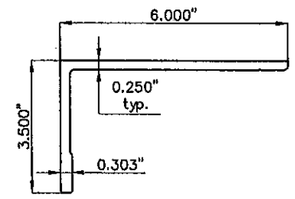

(45) HEAD ANCHOR CORNER RIGHT HR-FP-23

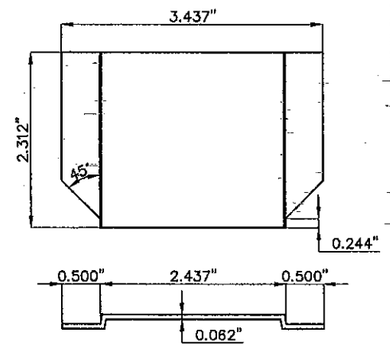

(47) 90 DEG. MULLION END CAP HR-FP-8
SCALE : 1/2" = 1"

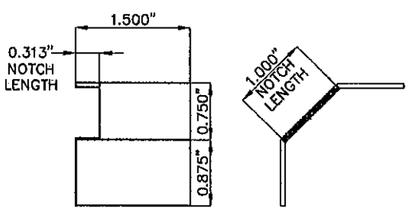

(48) WATER DIVERTER HR-FP-12

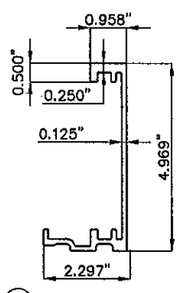

(50) JAMB HEAD ANCHOR SLEEVE HR-FP-16

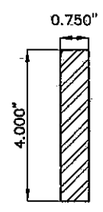

(52) STEEL REINFORCING RS-17

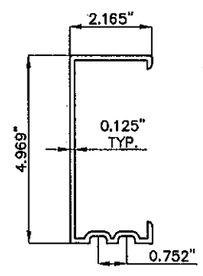

(61) SSG MULLION SPLICE

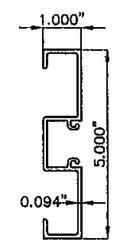

(62) DOOR JAMB D-226

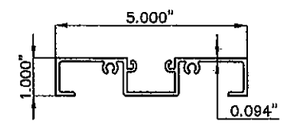

(62A) SUB-FRAME HEADER D-231

FLORIDA BUILDING CODE (High Velocity Hurricane Zone)

M.C.V./A.G. DRAWN BY

11/18/11 DATE

11-125 DRAWING No

SHEET 3 OF 33

HR-251 SSG CAPTURED CURTAIN WALL SYSTEM LARGE & SMALL MISSILE WITH INSULATING LAMINATED GLASS

Oldcastle BuildingEnvelope™
803 Airport Rd - Terrell, TX 75160
www.OldcastleBE.com - Phone 800-869-4567

REV. No	DESCRIPTION	DATE	REV. No	DESCRIPTION	DATE
1	OLD 10-014	11/18/11	-	-	-
-	-	-	-	-	-

©2010 TILTECO, INC

TILTECO INC.
TILLIT TESTING & ENGINEERING COMPANY
6355 N.W. 36th. St., Ste. 305, VIRGINIA GARDENS, FL 33166
Phone : (305)871-1530 . Fax : (305)871-1531
e-mail: tilteco@aol.com
EB-0006719
WALTER A. TILLIT Jr. P.E.
FLORIDA Lic. # 44167

WALTER A. TILLIT JR. LICENSE No. 44167 STATE OF FLORIDA PROFESSIONAL ENGINEER

P.E. SEAL/SIGNATURE/DATE

PRODUCT REVISED
as complying with the Florida Building Code
Acceptance No 11-1206.09
Expiration Date FEB. 17, 2016
By Manuel Cruz
Miami-Date Product Control

MIAMI-DADE COUNTY

BILL OF MATERIALS

ITEM No.	PART NUMBER	DESCRIPTION	DIMENSIONS	MATERIAL	MANUFACTURER	NOTES
1.	GP-118	EXTERIOR GLAZING GASKET	.342 X .450	VINYL	EPG	70 DUROMETER
2.	FG-5185	INTERIOR SPACER GASKET	.25 X .375	VINYL	EPG	
3.	DOW 995	STRUCTURAL SILICONE	FILL SPACE	SILICONE	DOW CORNING	
4.	GP-103	EXTERIOR PERIMETER GASKET	.150 X .470	VINYL	EPG	
5.	CW-6H	THERMAL ISOLATOR	.625 X .421	RIGID VINYL	OLDCASTLE BUILDINGENVELOPE	
6.	CW-2102	SETTING BLOCK	1.250 X .188 X 4" LONG	RIGID VINYL	EPG	
7.	HR-FP-4	MULLION END CAPS	3.5 X 2.00 X .062	RIGID VINYL	OLDCASTLE BUILDINGENVELOPE	SEE NOTE # 2 BELOW
8.	795	PERIMETER SEALANT	FILL SPACE	SILICONE	DOW CORNING	
9.	FS-8	SPLINE ASSEMBLY SCREW	#14 X 1 HHSTS FS-322 (STALGARD COATED BY ELCO)	STEEL	ELCO	
10.	FS-7	JAMB SCREW	#10 X 3/4" PFH TYPE B	STEEL	VARIES	(2)@ EA. HORIZ. 12" O.C.@ 2PC JAMB
11.	FS-322	PRESSURE PLATE SCREW	#12-14 X 1" HWH #3 FS-322 (STALGARD COATED BY ELCO)	STEEL	ELCO	(1) @ EA. 24" O.C.
12.	CW-2	FACE CAP	.515 X 2.5 X .050	6063-T6 ALUMINUM	OLDCASTLE BUILDINGENVELOPE	
13.	ZG-60	PRESSURE BAR	2.40 X .450 X .094	6063-T6 ALUMINUM	OLDCASTLE BUILDINGENVELOPE	SEE NOTE: # 1 BELOW
14.	CW-1991	JAMB MULLION SPLICE	2.16" X 4.96" X .125	6063-T6 ALUMINUM	OLDCASTLE BUILDINGENVELOPE	
15.	CW-2023	JAMB MULLION	2.50 X 6.987 X .094	6063-T6 ALUMINUM	OLDCASTLE BUILDINGENVELOPE	
16.	CW-1996	MULLION FILLER	.806 X 4.734 X .094	6063-T6 ALUMINUM	OLDCASTLE BUILDINGENVELOPE	
17.	CW-2024	HEAD/SILL	2.39 X 6.862 X .094	6063-T6 ALUMINUM	OLDCASTLE BUILDINGENVELOPE	
18.	CW-1998	HEAD/SILL/HORIZONTAL TRIM	2.50 X 5.219 X .078	6063-T6 ALUMINUM	OLDCASTLE BUILDINGENVELOPE	
19.	CW-1999	SSG MULLION	2.50 X 5.25 X .094	6063-T6 ALUMINUM	OLDCASTLE BUILDINGENVELOPE	
20.	CW-2156	HORIZONTAL	2.39 X 6.847 X .094	6063-T6 ALUMINUM	OLDCASTLE BUILDINGENVELOPE	
21.	CW-2026	TWO PIECES JAMB FEMALE HALF	6.975 X 2.406 X .094	6063-T6 ALUMINUM	OLDCASTLE BUILDINGENVELOPE	
22.	CW-2002	TWO PIECES JAMB MALE HALF	1.203 X 5.25 X .094	6063-T6 ALUMINUM	OLDCASTLE BUILDINGENVELOPE	
23.	CW-2183	CORNER PRESSURE PLATE	1.884 X 5.401 X .125	6063-T6 ALUMINUM	OLDCASTLE BUILDINGENVELOPE	
24.	CW-2188	CORNER FACE CAP	.546 X 4.062 X .062	6063-T5 ALUMINUM	OLDCASTLE BUILDINGENVELOPE	
25.	CW-691	POCKET FILLER	.938 X 1.594 X .094	6063-T5 ALUMINUM	OLDCASTLE BUILDINGENVELOPE	
26.	CW-2018	CORNER MULLION FEMALE HALF	1.724 X 7.094 X .140	6063-T6 ALUMINUM	OLDCASTLE BUILDINGENVELOPE	
27.	CW-2019	CORNER MULLION MALE HALF	1.724 X 7.094 X .140	6063-T6 ALUMINUM	OLDCASTLE BUILDINGENVELOPE	
28.	CW-2020	CORNER MULLION FILLER	1.302 X 2.50 X .078	6063-T5 ALUMINUM	OLDCASTLE BUILDINGENVELOPE	
29.	CW-2021	CORNER SPLICE	1.064 X 6.3147 X .125	6063-T6 ALUMINUM	OLDCASTLE BUILDINGENVELOPE	

NOTE #1: ALL VERTICAL PRESSURE PLATES SHALL BE CUT ¼" SHORT IN LENGTH TO ALLOW FOR WEEP SLOT

NOTE #2-BEAD OF DOW CORNING 995 SILICONE SHALL BE APPLIED TO FRAME SURFACE BEFORE PART IS INSTALLED

FLORIDA BUILDING CODE (High Velocity Hurricane Zone)

HR-251 SSG CAPTURED CURTAIN WALL SYSTEM LARGE & SMALL MISSILE WITH INSULATING LAMINATED GLASS

M.C.V./A.G. DRAWN BY

11/18/11 DATE

11-125 DRAWING No

SHEET 4 OF 33

Oldcastle BuildingEnvelope™
803 Airport Rd - Terrell, TX 75160
www.OldcastleBE.com - Phone 800-869-4567

REV. No	DESCRIPTION	DATE
1	OLD 10-014	11/18/11

REV. No	DESCRIPTION	DATE
-	-	-
-	-	-

©2010 TILTECO, INC

TILTECO INC.
TILLIT TESTING & ENGINEERING COMPANY
6355 N.W. 36th. St., Ste. 305, VIRGINA GARDENS, FL 33166
Phone : (305)871-1530 , Fax : (305)871-1531
e-mail: tilteco@aol.com
EB-0006719
WALTER A. TILLIT Jr. P.E.
FLORIDA Lic. # 44167

WALTER A. TILLIT JR. LICENSE No. 44167 STATE OF FLORIDA PROFESSIONAL ENGINEER

P.E. SEAL/SIGNATURE/DATE

PRODUCT REVISED
as complying with the Florida Building Code
Acceptance No 11-1206.09
Expiration Date FEB.11.2016
By Manuel Perez
Miami Dade Product Control

MIAMI-DADE COUNTY

BILL OF MATERIALS (CONTINUED)

ITEM No.	PART NUMBER	DESCRIPTION	DIMENSIONS	MATERIAL	MANUFACTURER	NOTES
30.	HR-FP-5	LEFT AND RIGHT HAND JAMB END CAPS	2.96 X 0.78 X .062	RIGID VINYL	OLDCASTLE BUILDINGENVELOPE	SEE NOTE # 2 BELOW
31.	FG5000-PP-8	REINFORCING STEEL	4 5/8" X 1 1/4" X 1/4" CHANNEL	A36 STEEL	VARIES	USED @ VERTICAL CORNER MULLION, COAT ZINC RICH PRIMER
32.	FASTENER	STEEL REINFORCING ATTACHMENT BOLT	1/4-20 X 2" BOLT WITH WASHER AND NUT	STEEL	VARIES	ZINC COATED, PER ASTM B-633
33.	HR-FP-24	HEAD ANCHOR LEFT	3 1/2" x 6" x 4 1/4" LONG	6063-T6 ALUMINUM	OLDCASTLE BUILDINGENVELOPE	
33A.	HR-FP-25	HEAD ANCHOR RIGHT	3 1/2" x 6" x 4 1/4" LONG	6063-T6 ALUMINUM	OLDCASTLE BUILDINGENVELOPE	
34.	RS-25	REINFORCING STEEL	4 3/4" X 1 7/8" X 1/4" CHANNEL	A36 STEEL	VARIES	COAT ZINC RICH PRIMER
35.	AN-52	EXTRUDED ANGLE	2.00" X 2.00" X 1/8" ANGLE	6063-T6 ALUMINUM	OLDCASTLE BUILDINGENVELOPE	APPLY WITH DOUBLE SIDED TAPE
36.	HR-FP-15	HEAD ANCHOR SLEEVE	2 3/16" X 4 15/16" X X 2 1/2" LONG	6063-T6 ALUMINUM	OLDCASTLE BUILDINGENVELOPE	
37.	HR-FP-17	HEAD ANCHOR SLEEVE CORNER	2 3/16" X 6 3/16" X 3" LONG	6063-T6 ALUMINUM	OLDCASTLE BUILDINGENVELOPE	USED @ JAMBS
38.	HR-FP-13	BRAKE METAL SPLICE	.75 X 4.812 X .75 X .125 X 8" LONG	3030 ALUMINUM	OLDCASTLE BUILDINGENVELOPE	USED @ JAMBS
39.	HR-FP-14	BRAKE METAL SPLICE	.94 X 5.00 X 1.437 X .125 X 8" LONG	3030 ALUMINUM	OLDCASTLE BUILDINGENVELOPE	USED @ JAMBS
40.	FASTENER	ANCHOR BOLT	5/8-11 X 4 1/2" SAE GRD 5 BOLT, HEX NUT AND WASHER	STEEL	VARIES	ZINC COATED, PER ASTM B-633
41.	**	STEEL DEADLOAD ANCHOR	4" X 6" X 5/16" X 5" LONG	A36 STEEL	VARIES	ZINC COATED, PER ASTM B-633.
42.	**	SLIP PAD	4" X 4" X .063	VINYL	KORALATH	USED @ MID POINT ANCHORS
43.	FASTENER	JAMB ANCHOR BOLT	5/8-11 X 1 1/2" SAE GRD 5 BOLT	STEEL	VARIES	ZINC COATED, PER ASTM B-633
44.	HR-FP-22	CORNER HEAD ANCHOR LEFT	2.147" X 6.314" X .25"	6063-T6 ALUMINUM	OLDCASTLE BUILDINGENVELOPE	
45.	HR-FP-23	CORNER HEAD ANCHOR RIGHT	2.147" X 6.314" X .25"	6063-T6 ALUMINUM	OLDCASTLE BUILDINGENVELOPE	
46.	**	STEEL DEADLOAD ANCHOR @ CORNER	4" X 8" X 1/4" X 5" LONG	A36 STEEL	VARIES	
47.	HR-FP-8	90 DEG MULLION END CAP	4.615 X 3.195 X .062	RIGID VINYL	OLDCASTLE BUILDINGENVELOPE	TOP & BOTTOM OF MULLION SEE NOTE # 2 BELOW
48.	HR-FP-12	WATER DIVERTER	.0875 X 1.061 X .875	VINYL	OLDCASTLE BUILDINGENVELOPE	1.50 LONG SEE NOTE # 2 BELOW
49.	SM-5601	JOINT SEALANT TAPE	.125 X .750 X VARIES	BUTYL	SCHNEE-MOREHEAD	USED AT END OF INTERMEDIATE HORIZONTALS
50.	HR-FP-16	JAMB HEAD ANCHOR SLEEVE	2 3/16" X 5 5/16" X 5 1/8" LONG	6063-T6 ALUMINUM	OLDCASTLE BUILDINGENVELOPE	USED AT JAMBS
52.	RS-17	STEEL REINFORCING INCLUDES RS-25	3/4" X 4" STEEL BAR WITH RS-25	A36 STEEL	VARIES	USED AT DOOR MULLION
54.	FASTENER	STEEL REINFORCING ATTACHMENT BOLT	1/4-20 X 1 1/2" SAE GRADE 5 BOLT WITH WASHER AND NUT	STEEL	VARIES	THROUGH-BOLT @ INT HORIZONTALS
55.	HR-FP-10	BRIDGE	3.75 X 1.75 X .125	MOLDED PLASTIC	VARIES	
59.	FASTENER	ATTACHMENT BOLT	1/4-20 X 2 1/4" BOLT WITH WASHER AND NUT	STEEL	VARIES	ZINC COATED, PER ASTM B-633
60.	FASTENER	STEEL REINFORCING ATTACHMENT BOLT	1/4-20 X 3 1/2" SAE GRADE 5 BOLT WITH WASHER AND NUT	STEEL	VARIES	THROUGH-BOLT @ INT HORIZONTALS
61.	**	SSG MULLION SPLICE	4.969" X 2.500" X 0.125"	6063-T6 ALUMINUM	OLDCASTLE BUILDINGENVELOPE	
62.	D-226	DOOR JAMB	1.00" X 5.00" X .094"	6063-T6 ALUMINUM	OLDCASTLE BUILDINGENVELOPE	
62A.	D-231	SUB-FRAME HEADER	1.00" X 5.00" X .094"	6063-T6 ALUMINUM	OLDCASTLE BUILDINGENVELOPE	

** NO PART NUMBER ASSIGNED
NOTE #2-BEAD OF DOW CORNING 995 SILICONE SHALL BE APPLIED TO FRAME SURFACE BEFORE PART IS INSTALLED

FLORIDA BUILDING CODE (High Velocity Hurricane Zone)

HR-251 SSG CAPTURED CURTAIN WALL SYSTEM LARGE & SMALL MISSILE WITH INSULATING LAMINATED GLASS

M.C.V./A.G. DRAWN BY
11/18/11 DATE
11-125 DRAWING No
SHEET 5 OF 33

Oldcastle BuildingEnvelope™
803 Airport Rd - Terrell, TX 75160
www.OldcastleBE.com - Phone 800-869-4567

REV. No	DESCRIPTION	DATE	REV. No	DESCRIPTION	DATE
1	OLD 10-014	11/18/11	-	-	-

©2010 TILTECO, INC

TILTECO INC.
TILLIT TESTING & ENGINEERING COMPANY
6355 N.W. 36th St. Ste. 305 VIRGINIA GARDENS, FL 33166
Phone : (305)871-1530 Fax : (305)871-1531
e-mail: tilteco@aol.com
EB-0006719
WALTER A. TILLIT Jr. P.E.
FLORIDA Lic. # 44167

WALTER A. TILLIT JR. LICENSE No. 44167 STATE OF FLORIDA PROFESSIONAL ENGINEER

P.E. SEAL/SIGNATURE/DATE

PRODUCT REVISED as complying with the Florida Building Code
Acceptance No 11-1206.09
Expiration Date FEB 17 2016
By Miami-Dade Product Control

MIAMI-DADE COUNTY

ISOMETRIC ELEVATION FOR HR-251 SSG CAPTURED CURTAIN WALL SYSTEM LARGE & SMALL MISSILE W/ INSULATING LAMINATED GLASS

N.T.S

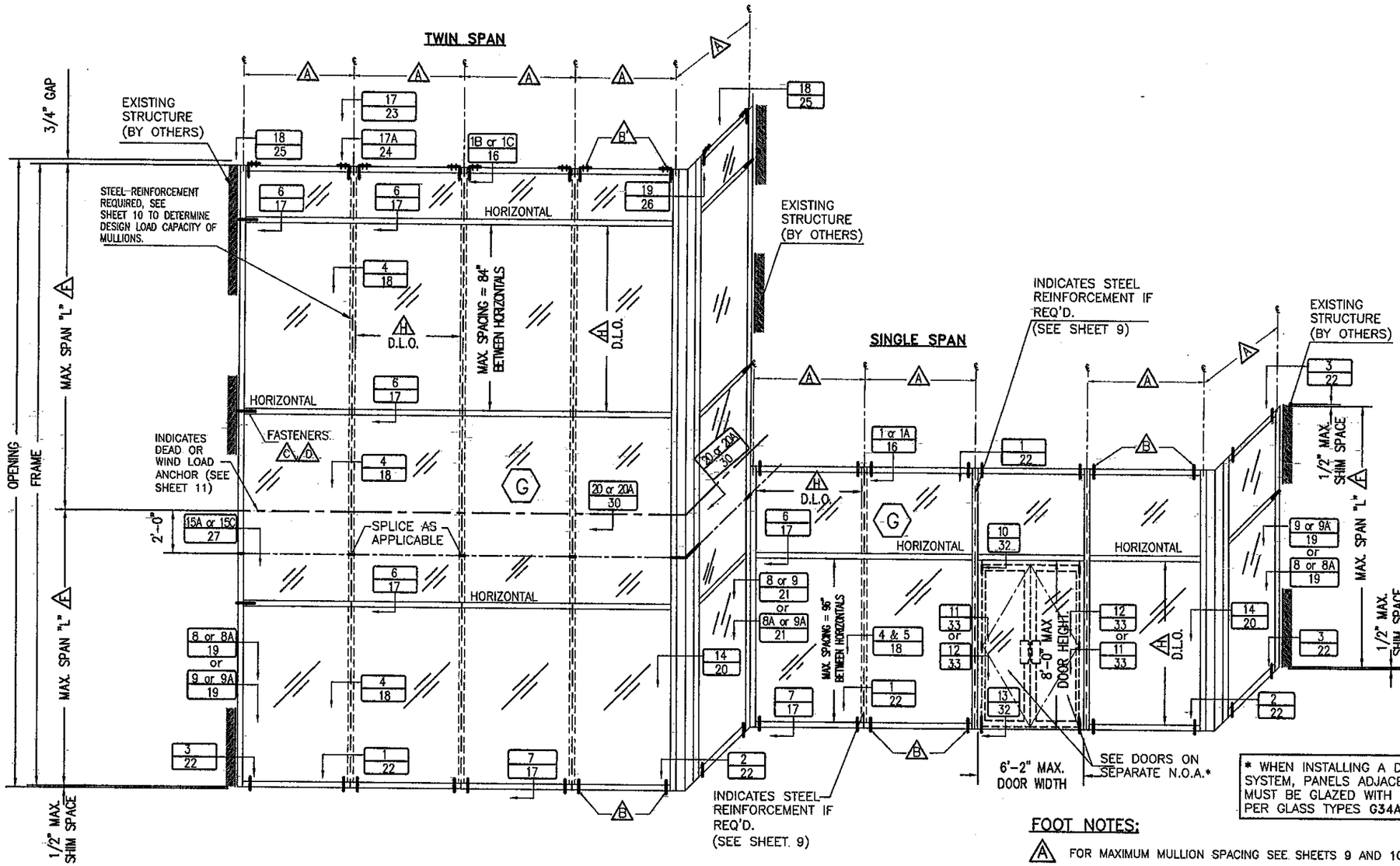

* WHEN INSTALLING A DOOR IN THIS SYSTEM, PANELS ADJACENT TO DOOR MUST BE GLAZED WITH SAFETY GLASS, PER GLASS TYPES G34A OR G35A.

FOOT NOTES:

- (A) FOR MAXIMUM MULLION SPACING SEE SHEETS 9 AND 10.
- (B) FOR HEAD (AT SINGLE SPAN CASE) AND SILL (AT SINGLE AND TWIN SPAN CASES), FASTENERS QUANTITY, TYPES AND SPECS SEE SHEET 12.
- (B') FOR HEAD (AT TWIN SPAN), FASTENERS QUANTITY, TYPES AND SPECS SEE SHEET 13.
- (C) FOR JAMB FASTENERS QUANTITY, TYPES AND SPECS SEE SHEETS 14 & 15.
- (D) SEE SHEETS 14 THRU 15 FOR MAXIMUM A.S.D. PRESSURE RATING FOR JAMBS CONNECTED TO EXISTING STRUCTURE.
- (F) FOR MAXIMUM MULLION SPAN SEE SHEETS 9 AND 10.
- (G) FOR GLAZING DETAILS AND GLASS SCHEDULE SEE SHEET 7.
- (H) FOR MAXIMUM D.L.O. AND PRESSURE RATING FOR GLASS SEE SCHEDULE ON SHEET 8.

FLORIDA BUILDING CODE (High Velocity Hurricane Zone)

M.C.V./A.G. DRAWN BY

11/18/11 DATE

11-125 DRAWING No

SHEET 6 OF 33

HR-251 SSG CAPTURED CURTAIN WALL SYSTEM LARGE & SMALL MISSILE WITH INSULATING LAMINATED GLASS

Oldcastle BuildingEnvelope™
803 Airport Rd - Terrell, TX 75160
www.OldcastleBE.com - Phone 800-869-4567

REV. No	DESCRIPTION	DATE	REV. No	DESCRIPTION	DATE
1	OLD 10-014	11/18/11	-	-	-
-	-	-	-	-	-

©2010 TILTECO, INC

TILTECO INC.
TILLIT TESTING & ENGINEERING COMPANY
6355 N.W. 36th. St., Ste. 305, VIRGINIA GARDENS, FL 33166
Phone : (305)871-1530 , Fax : (305)871-1531
e-mail: tilteco@aol.com
EB-0006719
WALTER A. TILLIT Jr. P.E.
FLORIDA Lic. # 44167

WALTER A. TILLIT JR. LICENSE No. 44167 STATE OF FLORIDA PROFESSIONAL ENGINEER

P.E. SEAL/SIGNATURE/DATE

PRODUCT REVISED as complying with the Florida Building Code Acceptance No 11-1206.09 Expiration Date FEB.17,2016
By Miami-Dade Product Control

MIAMI-DADE COUNTY

TYPICAL GLAZING DETAILS

SCALE 1/2" = 1"

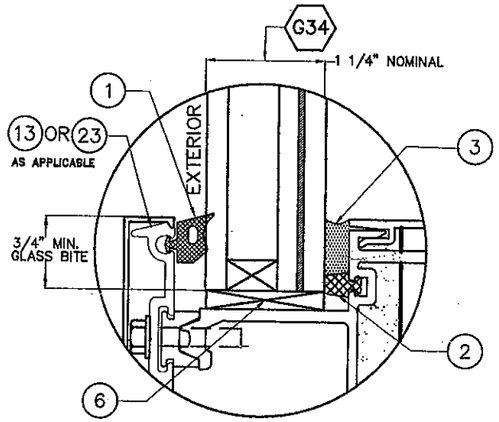

GLASS TYPE G34

@ HORIZONTALS, JAMBS & CORNER MULLIONS

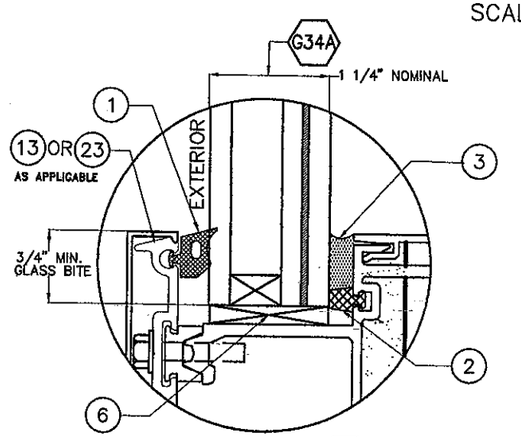

GLASS TYPE G34A

@ HORIZONTALS, JAMBS & CORNER MULLIONS

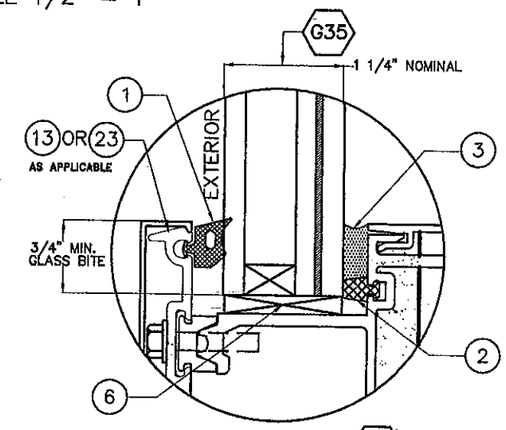

GLASS TYPE G35

@ HORIZONTALS, JAMBS & CORNER MULLIONS

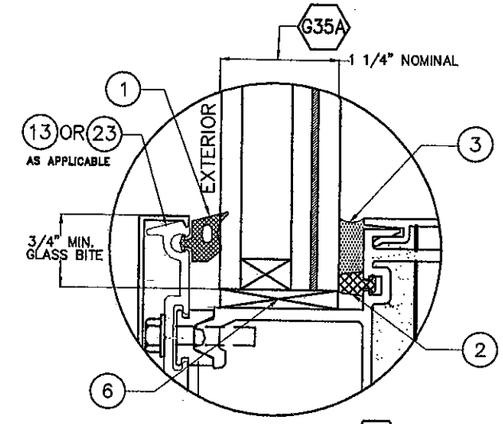

GLASS TYPE G35A

@ HORIZONTALS, JAMBS & CORNER MULLIONS

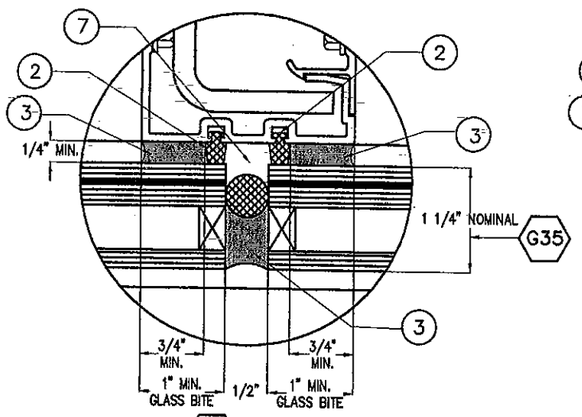

GLASS TYPE G35 @ SSG MULLIONS

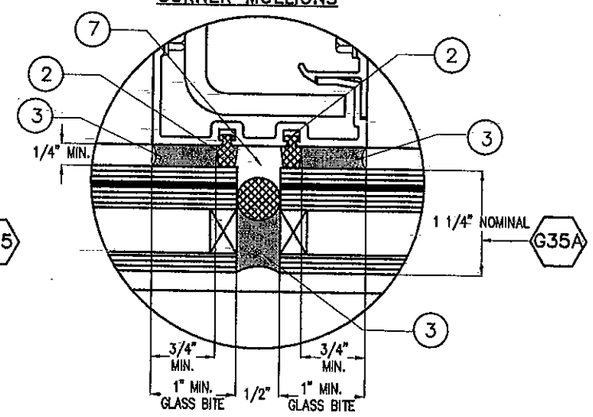

GLASS TYPE G35A @ SSG MULLIONS

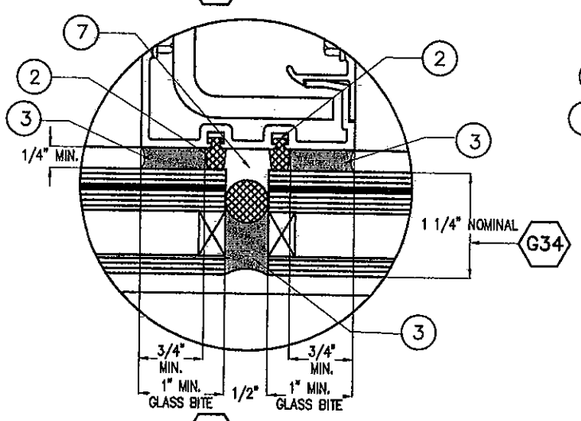

GLASS TYPE G34 @ SSG MULLIONS

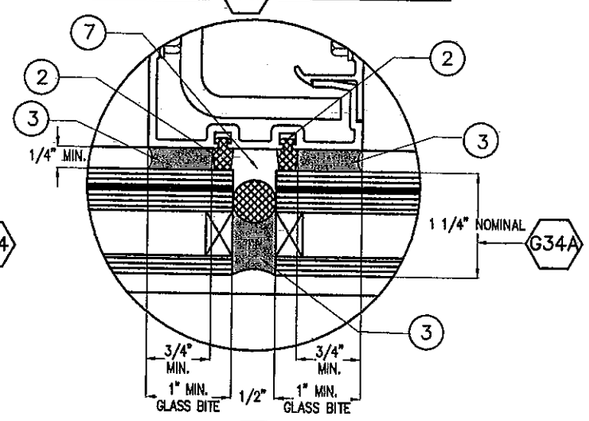

GLASS TYPE G34A @ SSG MULLIONS

GLASS SCHEDULE

GLASS LABEL	GLASS COMPOSITION	MANUFACTURER NAME	MAX. D.L.O.	VALID ONLY FOR INSTALLATIONS
G34	1 1/4" INSULATED LAMINATED GLASS CONSISTING OF EXTERIOR 1/4" H.S. – 1/2" AIR SPACE – 1/4" H.S., –0.090" SOLUTIA SAFLEX® IIIG PVB CLEAR OR COLORED INTERLAYER – 1/4" H.S.	SOLUTIA	SEE SCHEDULE ON SHEET 8	UP TO 30 FEET ABOVE GRADE MEASURED AT SILL
G34A	1 1/4" INSULATED LAMINATED GLASS CONSISTING OF EXTERIOR 1/4" TEMP. – 1/2" AIR SPACE – 1/4" H.S., –0.090" SOLUTIA SAFLEX® IIIG PVB CLEAR OR COLORED INTERLAYER – 1/4" H.S.	SOLUTIA	SEE SCHEDULE ON SHEET 8	ABOVE 30 FEET ABOVE GRADE MEASURED AT SILL
G35	1 1/4" INSULATED LAMINATED GLASS CONSISTING OF EXTERIOR 1/4" H.S. – 1/2" AIR SPACE – 1/4" H.S. – 0.075" SOLUTIA VANCEVA COMPOSITES INTERLAYER – 1/4" H.S.	SOLUTIA	SEE SCHEDULE ON SHEET 8	UP TO 30 FEET ABOVE GRADE MEASURED AT SILL
G35A	1 1/4" INSULATED LAMINATED GLASS CONSISTING OF EXTERIOR 1/4" TEMP. – 1/2" AIR SPACE – 1/4" H.S. – 0.075" SOLUTIA VANCEVA COMPOSITES INTERLAYER – 1/4" H.S.	SOLUTIA	SEE SCHEDULE ON SHEET 8	ABOVE 30 FEET ABOVE GRADE MEASURED AT SILL

FLORIDA BUILDING CODE (High Velocity Hurricane Zone)

M.C.V./A.G. DRAWN BY

11/18/11 DATE

11-125 DRAWING No

SHEET 7 OF 33

HR-251 SSG CAPTURED CURTAIN WALL SYSTEM LARGE & SMALL MISSILE WITH INSULATING LAMINATED GLASS

Oldcastle BuildingEnvelope™
803 Airport Rd - Terrell, TX 75160
www.OldcastleBE.com - Phone 800-869-4567

REV. No.	DESCRIPTION	DATE	REV. No	DESCRIPTION	DATE
1	OLD 10-014	11/15/11	-	-	-
			-	-	-

©2010 TILTECO, INC

TILTECO INC.
TILLIT TESTING & ENGINEERING COMPANY
6355 N.W. 36th. St., Ste. 305, VIRGINIA GARDENS, FL 33166
Phone : (305)871-1530 . Fax : (305)871-1531
e-mail: tilteco@aol.com
EB-0006719
WALTER A. TILLIT Jr., P.E.
FLORIDA Lic. # 44167

WALTER A. TILLIT JR. LICENSE No. 44167 STATE OF FLORIDA PROFESSIONAL ENGINEER

P.E. SEAL/SIGNATURE/DATE

PRODUCT REVISED
as complying with the Florida Building Code
Acceptance No 11-1206.09
Expiration Date Feb. 17, 2016
By Miami Dade Product Control

MIAMI-DADE COUNTY

MAXIMUM FRAME WIDTH "a" AND FRAME LENGTH "b" VERSUS A.S.D. DESIGN PRESSURE RATING (psf) SCHEDULE *

GLASS TYPES

G34 , G34A , G35 & G35A

DIMENSION "a"	DIMENSION "b"	MAXIMUM A.S.D.DESIGN PRESSURE RATING (psf)
24"	from 24" to 96"	±90.0
30"	from 30" to 96"	±90.0
36"	from 36" to 96"	±90.0
42"	from 42" to 96"	±90.0
48"	from 48" to 96"	±90.0
52.1"	from 52.1" to 96"	±90.0
54"	from 54" to 92"	±86.8
60"	from 60" to 83"	±78.0
66"	from 66" to 75"	±71.0
70.5"	from 70.5" to 70.5"	±66.5

* DETERMINATION OF MAXIMUM DAY LIGHT OPENING (D.L.O.) AT EACH END OF GLASS GIVEN "a" & "b"

SIDE	MAX. DAY LIGHT OPENING	
	(D.L.O.) Formula at vertical & jamb mullions	(D.L.O.) Formula at horizontal, head & sill frames
MAX. D.L.O. (a) (SHORT SIDE)	"a"−5.00"	--
MAX. D.L.O. (b) (LONG SIDE)	--	"b"−5.00"

NOTES:
1. SEE SHEET 7 FOR GLAZING DETAILS AND GLASS SCHEDULE.

DIMENSIONS LEGEND

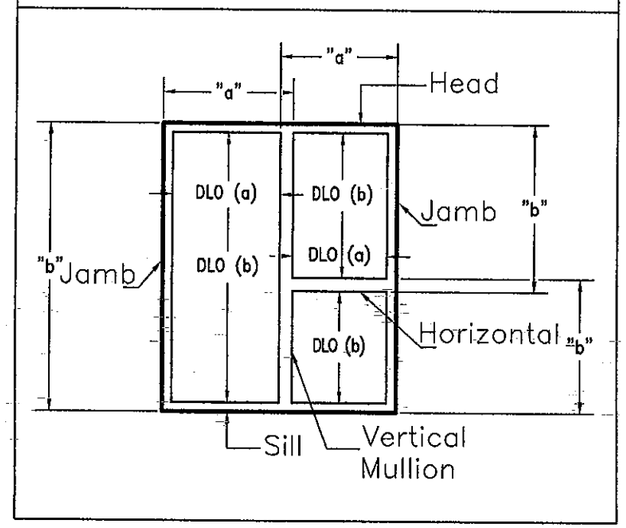

FLORIDA BUILDING CODE (High Velocity Hurricane Zone)

HR-251 SSG CAPTURED CURTAIN WALL SYSTEM LARGE & SMALL MISSILE WITH INSULATING LAMINATED GLASS

M.C.V./A.G. DRAWN BY

11/18/11 DATE

11-125 DRAWING No

SHEET 8 OF 33

Oldcastle BuildingEnvelope™
803 Airport Rd - Terrell, TX 75160
www.OldcastleBE.com - Phone 800-869-4567

REV. No	DESCRIPTION	DATE	REV. No	DESCRIPTION	DATE
1	OLD 10-014	11/18/11	-	-	-
-			-	-	-

©2010 TILTECO, INC

TILTECO INC.
TILLIT TESTING & ENGINEERING COMPANY
6355 N.W. 36th. St., Ste. 305, VIRGINIA GARDENS, FL 33166
Phone : (305)871-1530 . Fax : (305)871-1531
e-mail: tilteco@aol.com
EB-0006719
WALTER A. TILLIT Jr. P.E.
FLORIDA Lic. # 44167

WALTER A. TILLIT JR. LICENSE No. 44167 STATE OF FLORIDA PROFESSIONAL ENGINEER

P.E. SEAL/SIGNATURE/DATE

PRODUCT REVISED as complying with the Florida Building Code
Acceptance No 11-1206.09
Expiration Date FEB.17.2016
By Miami Dade Product Control

MIAMI-DADE COUNTY

HR-251 SSG SINGLE SPAN MULLION

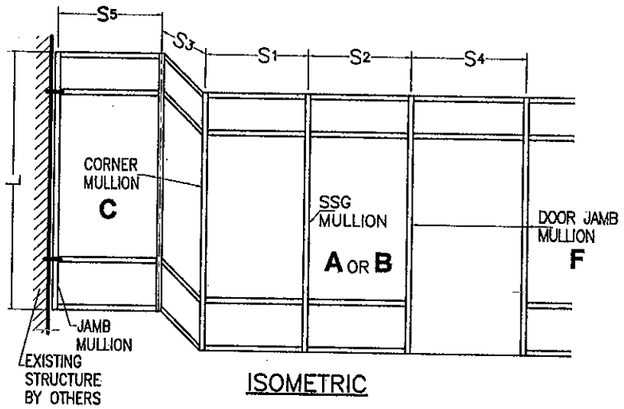

ISOMETRIC

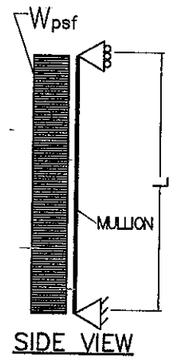

SIDE VIEW

L = MULLION SPAN ; S_1, S_2, S_3, S_4 & S_5 = MULLION SPACING

EFFECTIVE SPACING $b = \frac{S_1 + S_2}{2}$
(FOR STANDARD MULLION)

EFFECTIVE SPACING $b = \frac{S_1 + S_3}{2}$
(FOR CORNER MULLION)

EFFECTIVE SPACING $b = \frac{S_2 + S_4}{2}$
(FOR DOOR JAMB MULLION)

EFFECTIVE SPACING $b = \frac{S_5}{2}$
(FOR JAMB MULLION)

CASE DEFINITIONS

CASE 1 : SINGLE SPAN UNREINFORCED SSG MULLION **A** (SEE DET. 5/18)

CASE 2 : SINGLE SPAN REINFORCED SSG MULLION **B** FULL HEIGHT. (SEE DET. 4/18)

CASE 3 : SINGLE SPAN REINFORCED CORNER MULLION **C** FULL HEIGHT. (SEE DET. 14/20)

CASE 6 : SINGLE SPAN REINFORCED DOOR JAMB MULLION **F** FULL HEIGHT. (SEE DET. 12/33)

A	CASE:1 LIGHT MULLION (19) + (16)	Ix= 7.031 in4 Sx= 2.6713 in3 IN TERMS OF ALUM.

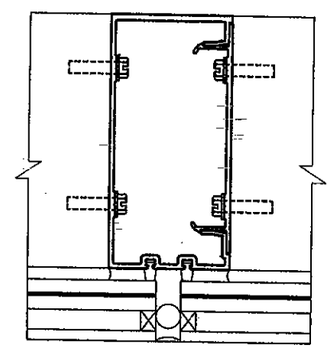

C	CASE:3 CORNER MULLION (25) + (26) W/ STEEL CHANNEL (31)	Ix= 35.138 in4 Sx= 9.0422 in3 IN TERMS OF ALUM.

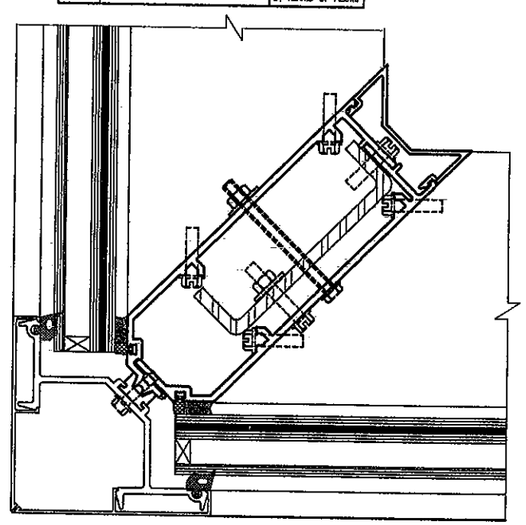

B	CASE:2 LIGHT MULLION (19) + (16) W/ STEEL CHANNEL (34)	Ix= 24.5170 in4 Sx= 9.0837 in3 IN TERMS OF ALUM.

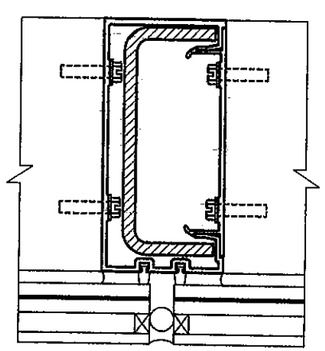

F	CASE:6 LIGHT MULLION (15) + (16) W/ STEEL CHANNEL (34) & 3/4"x4" STEEL BAR (52)	Ix= 40.604 in4 Sx= 9.2970 in3 IN TERMS OF ALUM.

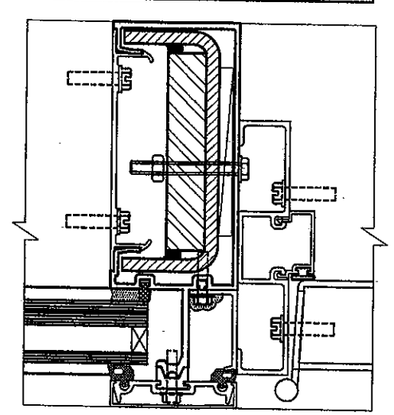

MAXIMUM A.S.D. DESIGN PRESSURE RATING FOR SSG, DOOR JAMB & CORNER MULLIONS *

MAXIMUM MULLION SPAN "L"(FT) SCHEDULE FOR A GIVEN A.S.D. DESIGN PRESSURE RATING (psf) AND A GIVEN MULLION EFFECTIVE SPACING "b"

MAXIMUM A.S.D. DESIGN PRESSURE RATING (psf)	EFFECTIVE SPACING "b" (Ft-in)	SINGLE SPAN MULLIONS CASE 1 MULLION: A "L" (Ft-in)	CASE 2 MULLION: B "L" (Ft-in)	CASE 3 MULLION: C "L" (Ft-in)	CASE 6 MULLION: F "L" (Ft-in)
60.0	3 '- 0 "	8 '- 0 "	12 '- 0 "	12 '- 0 "	12 '- 0 "
	3 '- 6 "	8 '- 0 "	12 '- 0 "	12 '- 0 "	12 '- 0 "
	4 '- 0 "	8 '- 0 "	12 '- 0 "	12 '- 0 "	12 '- 0 "
	5 '- 0 "	-	-	-	12 '- 0 "
65.0	3 '- 0 "	8 '- 0 "	12 '- 0 "	12 '- 0 "	12 '- 0 "
	3 '- 6 "	8 '- 0 "	12 '- 0 "	12 '- 0 "	12 '- 0 "
	4 '- 0 "	8 '- 0 "	12 '- 0 "	12 '- 0 "	12 '- 0 "
	5 '- 0 "	-	-	-	12 '- 0 "
67.0	3 '- 0 "	-	12 '- 0 "	12 '- 0 "	12 '- 0 "
	3 '- 6 "	-	12 '- 0 "	12 '- 0 "	12 '- 0 "
	4 '- 0 "	-	12 '- 0 "	12 '- 0 "	12 '- 0 "
	5 '- 0 "	-	-	-	12 '- 0 "
70.0	3 '- 0 "	-	12 '- 0 "	12 '- 0 "	12 '- 0 "
	3 '- 6 "	-	12 '- 0 "	12 '- 0 "	12 '- 0 "
	4 '- 0 "	-	12 '- 0 "	12 '- 0 "	12 '- 0 "
	5 '- 0 "	-	-	-	12 '- 0 "
75.0	3 '- 0 "	-	12 '- 0 "	12 '- 0 "	12 '- 0 "
	3 '- 6 "	-	12 '- 0 "	12 '- 0 "	12 '- 0 "
	4 '- 0 "	-	12 '- 0 "	12 '- 0 "	12 '- 0 "
	5 '- 0 "	-	-	-	11 '- 6 "
80.0	3 '- 0 "	-	12 '- 0 "	12 '- 0 "	12 '- 0 "
	3 '- 6 "	-	12 '- 0 "	12 '- 0 "	12 '- 0 "
	4 '- 0 "	-	12 '- 0 "	12 '- 0 "	12 '- 0 "
	5 '- 0 "	-	-	-	10 '- 10 "
85.0	3 '- 0 "	-	12 '- 0 "	12 '- 0 "	12 '- 0 "
	3 '- 6 "	-	12 '- 0 "	12 '- 0 "	12 '- 0 "
	4 '- 0 "	-	12 '- 0 "	12 '- 0 "	12 '- 0 "
	5 '- 0 "	-	-	-	10 '- 2 "
90.0	3 '- 0 "	-	12 '- 0 "	12 '- 0 "	12 '- 0 "
	3 '- 6 "	-	12 '- 0 "	12 '- 0 "	12 '- 0 "
	4 '- 0 "	-	12 '- 0 "	12 '- 0 "	12 '- 0 "
	5 '- 0 "	-	-	-	9 '- 7 "

* MAXIMUM A.S.D. DESIGN PRESSURE RATING FOR SSG, DOOR JAMB & CORNER MULLION WILL AUTOMATICALLY QUALIFY A.S.D. DESIGN PRESSURE RATINGS FOR JAMBS FOR ANY GIVEN MULLION SPACING.
MAXIMUM JAMB SPAN (DISTANCE BETWEEN ANCHORAGE POINTS) IS 96", AND JAMB ANCHORAGE SHALL BE PERFORMED AT HORIZONTAL RAIL LOCATIONS.

FLORIDA BUILDING CODE (High Velocity Hurricane Zone)

M.C.V./A.G. DRAWN BY
11/18/11 DATE
11-125 DRAWING No
SHEET 9 OF 33

HR-251 SSG CAPTURED CURTAIN WALL SYSTEM LARGE & SMALL MISSILE WITH INSULATING LAMINATED GLASS

Oldcastle BuildingEnvelope™
803 Airport Rd - Terrell, TX 75160
www.OldcastleBE.com - Phone 800-869-4567

REV. No	DESCRIPTION	DATE
1	OLD 10-014	11/18/11
-	ISOMETRIC FIXED	02/10/11

REV. No	DESCRIPTION	DATE
-	-	-
-	-	-
-	-	-

©2010 TILTECO, INC

TILTECO INC.
TILLIT TESTING & ENGINEERING COMPANY
6355 N.W. 36th. St., Ste. 305, VIRGINIA GARDENS, FL 33166
Phone : (305)871-1530 , Fax : (305)871-1531
e-mail: tilteco@aol.com
EB-0006719
WALTER A. TILLIT Jr. P.E.
FLORIDA Lic. # 44167

WALTER A. TILLIT JR. LICENSE No. 44167 STATE OF FLORIDA PROFESSIONAL ENGINEER
11/18/11
P.E. SEAL/SIGNATURE/DATE

PRODUCT REVISED as complying with the Florida Building Code
Acceptance No. 11-1204.03
Expiration Date FEB 11 2016
By Miami-Dade Product Control

MIAMI-DADE COUNTY

HR-251 SSG TWIN SPAN MULLION

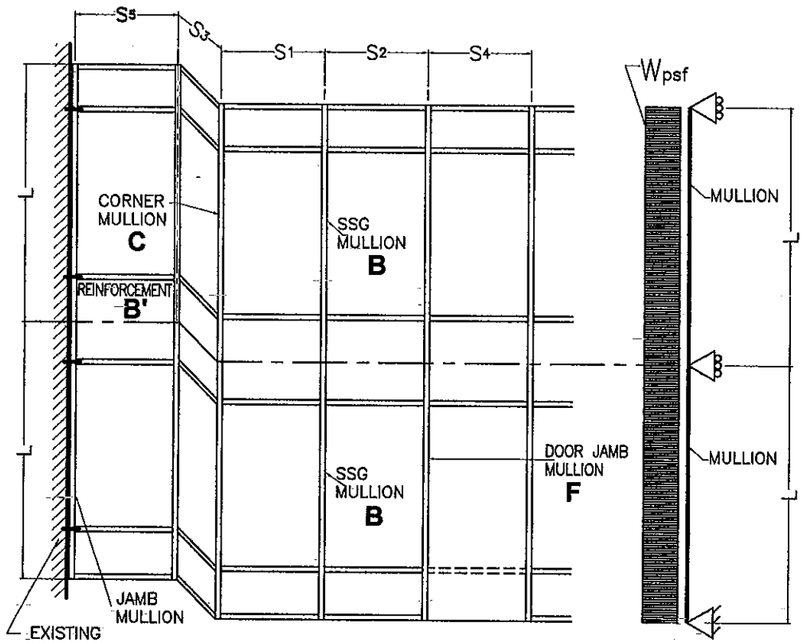

ISOMETRIC

SIDE VIEW

L = MULLION SPAN ; S1, S2, S3, S4 & S5 = MULLION SPACING

EFFECTIVE SPACING $b = \frac{S_1 + S_2}{2}$ (FOR STANDARD MULLION)

EFFECTIVE SPACING $b = \frac{S_1 + S_3}{2}$ (FOR CORNER MULLION)

EFFECTIVE SPACING $b = \frac{S_2 + S_4}{2}$ (FOR DOOR JAMB MULLION)

EFFECTIVE SPACING $b = \frac{S_5}{2}$ (FOR JAMB MULLION)

CASE DEFINITIONS

CASE 4 : TWIN SPAN REINFORCED SSG MULLION B FULL HEIGHT. (SEE DET. 4/18).

CASE 5 : TWIN SPAN REINFORCED CORNER MULLION C FULL HEIGHT. (SEE DET. 14/20).

CASE 6 : REINFORCED DOOR JAMB MULLION F FULL HEIGHT. (SEE DET. 12/33)

B	CASE:4 LIGHT MULLION (19) + (16) W/ STEEL CHANNEL (34)	Ix= 24.517 in4 Sx= 9.084 in3 IN TERMS OF ALUM.

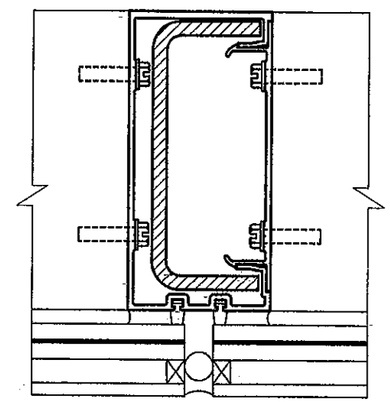

C	CASE:3 CORNER MULLION (25) + (26) W/ STEEL CHANNEL (31)	Ix= 35.138 in4 Sx= 9.0422 in3 IN TERMS OF ALUM.

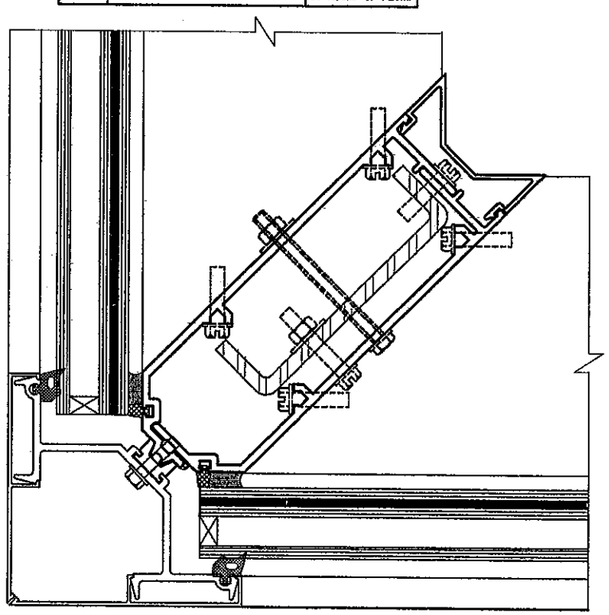

F	CASE:6 ◊ LIGHT MULLION (15) + (16) W/ STEEL CHANNEL (34) & 3/4"x4" STEEL BAR (52)	Ix= 40.604 in4 Sx= 9.2970 in3 IN TERMS OF ALUM.

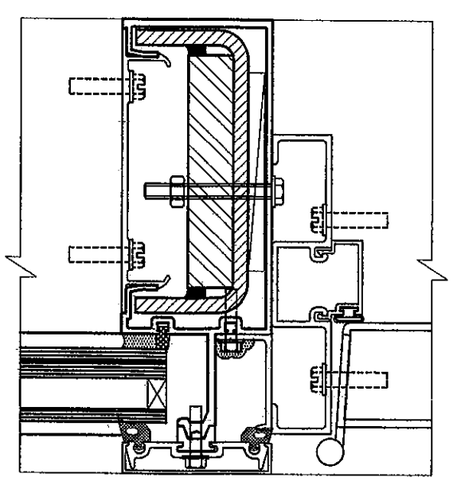

◊ THIS MULLION SHALL BE USED FULL HEIGHT, i.e. ON BOTH SPANS OF THE TWIN SPAN CONDITION.

MAXIMUM A.S.D. DESIGN PRESSURE RATING FOR SSG, DOOR JAMB & CORNER MULLIONS *

MAXIMUM MULLION SPAN "L"(FT) SCHEDULE FOR A GIVEN A.S.D. DESIGN PRESSURE RATING (psf) AND A GIVEN MULLION EFFECTIVE SPACING "b"

MAXIMUM A.S.D. DESIGN PRESSURE RATING (psf)	EFFECTIVE SPACING "b" (Ft-in)	TWIN SPAN MULLIONS CASE 4 MULLION: B "L" (Ft-in)	CASE 5 MULLION: C "L" (Ft-in)	CASE 6 ◊ MULLION: F "L" (Ft-in)
60.0	3 '- 0 "	12 '- 6 "	12 '- 6 "	12 '- 6 "
	3 '- 6 "	12 '- 6 "	12 '- 6 "	12 '- 6 "
	4 '- 0 "	12 '- 6 "	12 '- 6 "	12 '- 6 "
	4 '- 1 "	-	12 '- 6 "	12 '- 6 "
	5 '- 0 "	-	-	12 '- 6 "
65.0	3 '- 0 "	12 '- 6 "	12 '- 6 "	12 '- 6 "
	3 '- 6 "	12 '- 6 "	12 '- 6 "	12 '- 6 "
	4 '- 0 "	12 '- 6 "	12 '- 6 "	12 '- 6 "
	4 '- 1 "	-	12 '- 6 "	12 '- 6 "
	5 '- 0 "	-	-	12 '- 6 "
67.0	3 '- 0 "	12 '- 6 "	12 '- 6 "	12 '- 6 "
	3 '- 6 "	12 '- 6 "	12 '- 6 "	12 '- 6 "
	4 '- 0 "	12 '- 6 "	12 '- 6 "	12 '- 6 "
	4 '- 1 "	-	12 '- 6 "	12 '- 6 "
	5 '- 0 "	-	-	12 '- 6 "
70.0	3 '- 0 "	12 '- 6 "	12 '- 6 "	12 '- 6 "
	3 '- 6 "	12 '- 6 "	12 '- 6 "	12 '- 6 "
	4 '- 0 "	12 '- 6 "	12 '- 6 "	12 '- 6 "
	4 '- 1 "	-	12 '- 6 "	12 '- 6 "
	5 '- 0 "	-	-	12 '- 6 "
75.0	3 '- 0 "	12 '- 6 "	12 '- 6 "	12 '- 6 "
	3 '- 6 "	12 '- 6 "	12 '- 6 "	12 '- 6 "
	4 '- 0 "	12 '- 6 "	12 '- 6 "	12 '- 6 "
	4 '- 1 "	-	12 '- 6 "	12 '- 6 "
	5 '- 0 "	-	-	12 '- 4 "
80.0	3 '- 0 "	12 '- 6 "	12 '- 6 "	12 '- 6 "
	3 '- 6 "	12 '- 6 "	12 '- 6 "	12 '- 6 "
	4 '- 0 "	12 '- 6 "	12 '- 6 "	12 '- 6 "
	4 '- 1 "	-	12 '- 6 "	12 '- 6 "
	5 '- 0 "	-	-	12 '- 0 "
85.0	3 '- 0 "	12 '- 6 "	12 '- 6 "	12 '- 6 "
	3 '- 6 "	12 '- 6 "	12 '- 6 "	12 '- 6 "
	4 '- 0 "	12 '- 6 "	12 '- 6 "	12 '- 6 "
	4 '- 1 "	-	12 '- 6 "	12 '- 6 "
	5 '- 0 "	-	-	11 '- 7 "
90.0	3 '- 0 "	12 '- 6 "	12 '- 6 "	12 '- 6 "
	3 '- 6 "	12 '- 6 "	12 '- 6 "	12 '- 6 "
	4 '- 0 "	12 '- 6 "	12 '- 6 "	12 '- 6 "
	4 '- 1 "	-	12 '- 6 "	12 '- 6 "
	5 '- 0 "	-	-	11 '- 3 "

* MAXIMUM A.S.D. DESIGN PRESSURE RATING FOR SSG, DOOR JAMB & CORNER MULLION WILL AUTOMATICALLY QUALIFY A.S.D. DESIGN PRESSURE RATINGS FOR JAMBS FOR ANY GIVEN MULLION SPACING.
MAXIMUM JAMB SPAN (DISTANCE BETWEEN ANCHORAGE POINTS) IS 84", AND JAMB ANCHORAGE SHALL BE PERFORMED AT HORIZONTAL LOCATIONS.

FLORIDA BUILDING CODE (High Velocity Hurricane Zone)

M.C.V./A.G. DRAWN BY

11/18/11 DATE

11-125 DRAWING No

SHEET 10 OF 33

HR-251 SSG CAPTURED CURTAIN WALL SYSTEM LARGE & SMALL MISSILE WITH INSULATING LAMINATED GLASS

Oldcastle BuildingEnvelope™
803 Airport Rd - Terrell, TX 75160
www.OldcastleBE.com - Phone 800-869-4567

REV. No	DESCRIPTION	DATE	REV. No	DESCRIPTION	DATE
1	OLD 10-014	11/18/11	-	-	-
-	ISOMETRIC FIXED	02/10/14	-	-	-

©2010 TILTECO, INC

TILTECO INC.
TILLIT TESTING & ENGINEERING COMPANY
6355 N.W. 36th. St., Ste. 305, VIRGINIA GARDENS, FL 33166
Phone : (305)871-1530 . Fax : (305)871-1531
e-mail: tilteco@aol.com
EB-0006719
WALTER A. TILLIT Jr. P.E.
FLORIDA Lic. # 44167

WALTER A. TILLIT JR. LICENSE No. 44167 STATE OF FLORIDA PROFESSIONAL ENGINEER

P.E. SEAL/SIGNATURE/DATE

PRODUCT REVISED as complying with the Florida Building Code
Acceptance No 11-1206.09
Expiration Date Feb 17, 2016
By Miami-Dade Product Control

MIAMI-DADE COUNTY

OPTIONS FOR TWIN SPAN STANDARD AND CORNER MULLIONS INSTALLATION FOR HR-251 SSG CURTAIN WALL SYSTEM

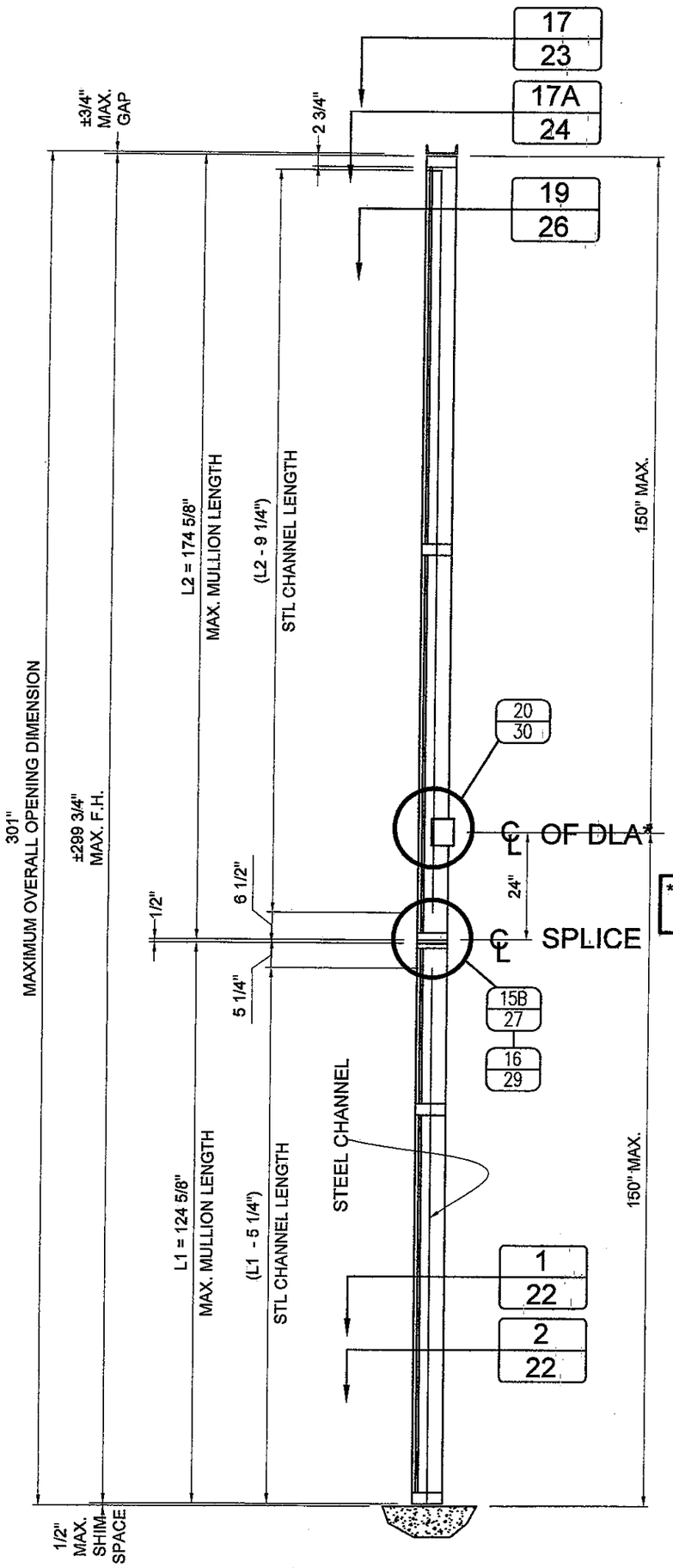

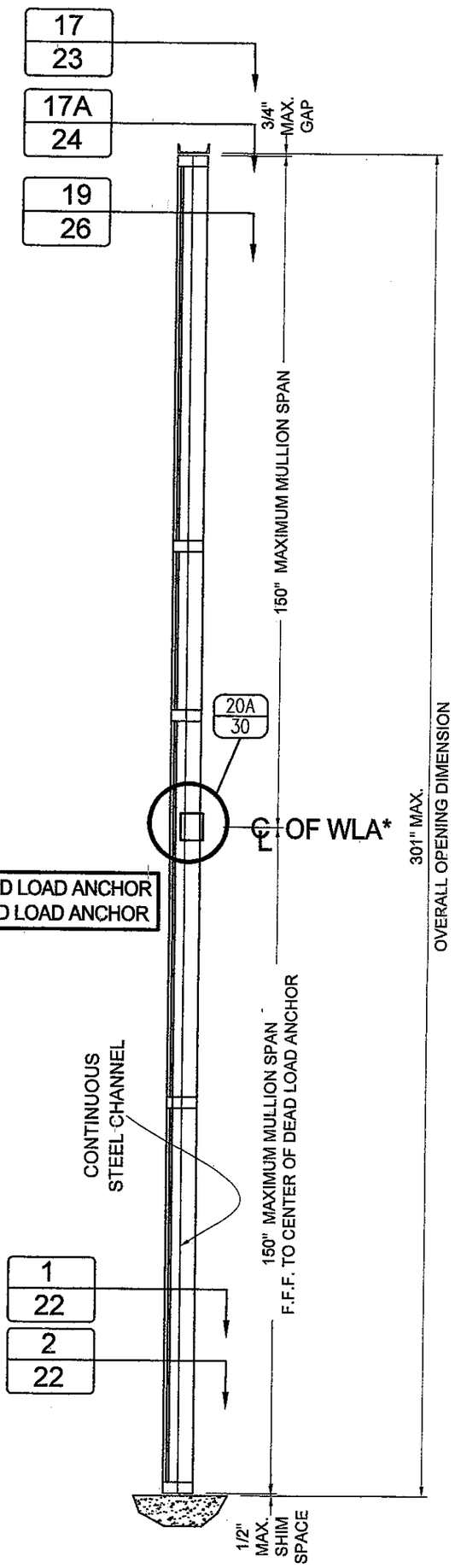

* DLA = DEAD LOAD ANCHOR
WLA = WIND LOAD ANCHOR

OPTION # 1
MULLION W/ SPLICE

(TWIN SPAN JAMBS MUST BE ALWAYS BE SPLICED @ LOCATION SHOWN ON ISOMETRIC ON SHEET 6, INCLUDING PROVISIONS FOR EXPANSION JOINTS)

OPTION # 2:
CONTINUOUS MULLION W/O SPLICE

PRODUCT REVISED
as complying with the Florida Building Code
Acceptance No 11-1206.09
Expiration Date FEB. 17, 2016
By Manuel Perez
Miami Dade Product Control

MIAMI–DADE COUNTY

WALTER A. TILLIT JR. LICENSE No. 44167 STATE OF FLORIDA PROFESSIONAL ENGINEER 11/23/11

P.E. SEAL/SIGNATURE/DATE

FLORIDA BUILDING CODE (High Velocity Hurricane Zone)

©2010 TILTECO, INC

TILTECO INC.
TILLIT TESTING & ENGINEERING COMPANY
6355 N.W. 36th. St., Ste. 305, VIRGINIA GARDENS, FL 33166
Phone : (305)871-1530 . Fax : (305)871-1531
e-mail: tilteco@aol.com
EB-0006719
WALTER A. TILLIT Jr. P.E.
FLORIDA Lic. # 44167

HR-251 SSG CAPTURED CURTAIN WALL SYSTEM LARGE & SMALL MISSILE WITH INSULATING LAMINATED GLASS

Oldcastle BuildingEnvelope™
803 Airport Rd - Terrell, TX 75160
www.OldcastleBE.com - Phone 800-869-4567

REV. No	DESCRIPTION	DATE	REV. No	DESCRIPTION	DATE
1	OLD 10-014	11/18/11	-	-	-
-			-	-	-

M.C.V./A.G.
DRAWN BY

11/18/11
DATE

11-125
DRAWING No

SHEET 11 OF 33

MAXIMUM A.S.D. DESIGN PRESSURE RATING FOR SINGLE SPAN (HEAD & SILL) & TWIN SPAN (SILL ONLY) MULLION CONNECTIONS (SEE ALSO SHEET 13)

SINGLE SPAN MULLION: HEAD & SILL CONNECTION *

MAXIMUM MULLION SPAN "L" (ft-in)	EFFECTIVE SPACING "b" (ft-in)	MAXIMUM A.S.D. DESIGN PRESSURE RATING (psf): POURED CONCRETE (Min. f'c = 3ksi) SUBSTRATE, FASTENERS TYPES A	B	C	1/4" Min. THK ASTM A-36 STEEL SUBSTRATE, FASTENERS D
8 '- 0	3 '- 0 "	90.0	90.0	90.0	90.0
	3 '- 6 "	90.0	90.0	90.0	90.0
	4 '- 0 "	90.0	90.0	90.0	90.0
	5 '- 0 "	90.0	90.0	90.0	90.0
8 '- 6 "	3 '- 0 "	90.0	90.0	90.0	90.0
	3 '- 6 "	90.0	90.0	90.0	90.0
	4 '- 0 "	90.0	90.0	90.0	90.0
	5 '- 0 "	90.0	90.0	90.0	90.0
9 '- 0 "	3 '- 0 "	90.0	90.0	90.0	90.0
	3 '- 6 "	90.0	90.0	90.0	90.0
	4 '- 0 "	90.0	90.0	90.0	90.0
	5 '- 0 "	90.0	90.0	90.0	90.0
9 '- 6 "	3 '- 0 "	90.0	90.0	90.0	90.0
	3 '- 6 "	90.0	90.0	90.0	90.0
	4 '- 0 "	90.0	90.0	90.0	90.0
	5 '- 0 "	90.0	90.0	90.0	90.0
10 '- 0 "	3 '- 0 "	90.0	90.0	90.0	90.0
	3 '- 6 "	90.0	90.0	90.0	90.0
	4 '- 0 "	90.0	90.0	90.0	90.0
	5 '- 0 "	90.0	90.0	90.0	90.0
10 '- 6 "	3 '- 0 "	90.0	90.0	90.0	90.0
	3 '- 6 "	90.0	90.0	90.0	90.0
	4 '- 0 "	90.0	90.0	90.0	90.0
	5 '- 0 "	90.0	90.0	90.0	90.0
11 '- 0 "	3 '- 0 "	90.0	90.0	90.0	90.0
	3 '- 6 "	90.0	90.0	90.0	90.0
	4 '- 0 "	90.0	90.0	90.0	90.0
	5 '- 0 "	90.0	90.0	90.0	90.0
11 '- 6 "	3 '- 0 "	90.0	90.0	90.0	90.0
	3 '- 6 "	90.0	90.0	90.0	90.0
	4 '- 0 "	90.0	90.0	90.0	90.0
	5 '- 0 "	90.0	90.0	90.0	90.0
12 '- 0 "	3 '- 0 "	90.0	90.0	90.0	90.0
	3 '- 6 "	90.0	90.0	90.0	90.0
	4 '- 0 "	90.0	90.0	90.0	90.0
	5 '- 0 "	90.0	90.0	90.0	90.0
12 '- 6 "	3 '- 0 "	90.0	90.0	90.0	90.0
	3 '- 6 "	90.0	90.0	90.0	90.0
	4 '- 0 "	90.0	90.0	90.0	90.0
	5 '- 0 "	90.0	90.0	88.5	90.0

TWIN SPAN MULLION: SILL CONNECTION *

MAXIMUM MULLION SPAN "L" (ft-in)	EFFECTIVE SPACING "b" (ft-in)	MAXIMUM A.S.D. DESIGN PRESSURE RATING (psf): POURED CONCRETE (Min. f'c = 3ksi) SUBSTRATE, FASTENERS TYPES A	B	C	1/4" Min. THK ASTM A-36 STEEL SUBSTRATE, FASTENERS D
8 '- 0 "	3 '- 0 "	90.0	90.0	90.0	90.0
	3 '- 6 "	90.0	90.0	90.0	90.0
	4 '- 0 "	90.0	90.0	90.0	90.0
	4 '- 1 "	90.0	90.0	90.0	90.0
	5 '- 0 "	90.0	90.0	90.0	90.0
8 '- 6 "	3 '- 0 "	90.0	90.0	90.0	90.0
	3 '- 6 "	90.0	90.0	90.0	90.0
	4 '- 0 "	90.0	90.0	90.0	90.0
	4 '- 1 "	90.0	90.0	90.0	90.0
	5 '- 0 "	90.0	90.0	90.0	90.0
9 '- 0 "	3 '- 0 "	90.0	90.0	90.0	90.0
	3 '- 6 "	90.0	90.0	90.0	90.0
	4 '- 0 "	90.0	90.0	90.0	90.0
	4 '- 1 "	90.0	90.0	90.0	90.0
	5 '- 0 "	90.0	90.0	90.0	90.0
9 '- 6 "	3 '- 0 "	90.0	90.0	90.0	90.0
	3 '- 6 "	90.0	90.0	90.0	90.0
	4 '- 0 "	90.0	90.0	90.0	90.0
	4 '- 1 "	90.0	90.0	90.0	90.0
	5 '- 0 "	90.0	90.0	90.0	90.0
10 '- 0 "	3 '- 0 "	90.0	90.0	90.0	90.0
	3 '- 6 "	90.0	90.0	90.0	90.0
	4 '- 0 "	90.0	90.0	90.0	90.0
	4 '- 1 "	90.0	90.0	90.0	90.0
	5 '- 0 "	90.0	90.0	90.0	90.0
10 '- 6 "	3 '- 0 "	90.0	90.0	90.0	90.0
	3 '- 6 "	90.0	90.0	90.0	90.0
	4 '- 0 "	90.0	90.0	90.0	90.0
	4 '- 1 "	90.0	90.0	90.0	90.0
	5 '- 0 "	90.0	90.0	90.0	90.0
11 '- 0 "	3 '- 0 "	90.0	90.0	90.0	90.0
	3 '- 6 "	90.0	90.0	90.0	90.0
	4 '- 0 "	90.0	90.0	90.0	90.0
	4 '- 1 "	90.0	90.0	90.0	90.0
	5 '- 0 "	90.0	90.0	90.0	90.0
11 '- 6 "	3 '- 0 "	90.0	90.0	90.0	90.0
	3 '- 6 "	90.0	90.0	90.0	90.0
	4 '- 0 "	90.0	90.0	90.0	90.0
	4 '- 1 "	90.0	90.0	90.0	90.0
	5 '- 0 "	90.0	90.0	90.0	90.0
12 '- 0 "	3 '- 0 "	90.0	90.0	90.0	90.0
	3 '- 6 "	90.0	90.0	90.0	90.0
	4 '- 0 "	90.0	90.0	90.0	90.0
	4 '- 1 "	90.0	90.0	90.0	90.0
	5 '- 0 "	90.0	90.0	90.0	90.0
12 '- 6 "	3 '- 0 "	90.0	90.0	90.0	90.0
	3 '- 6 "	90.0	90.0	90.0	90.0
	4 '- 0 "	90.0	90.0	90.0	90.0
	4 '- 1 "	90.0	90.0	90.0	90.0
	5 '- 0 "	90.0	90.0	88.5	90.0

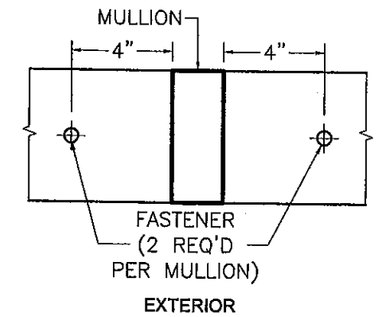

SCHEMATIC CONNECTION DETAIL *

* SEE CONNECTION DETAILS ON SHEETS 16 & 22 FOR FASTENERS QUANTITY & LOCATIONS AT MULLION.

FASTENERS TYPES & SUBSTRATES REQUIREMENTS

A - 1/2"Ø HILTI KWIK BOLT TZ ANCHOR W/ 3 1/4" Min. EMBEDMENT INTO 8" Min. THICK POURED CONCRETE (Min. f'c = 3 ksi) BEYOND ANY FINISH MATERIAL, W/ 6" MIN. EDGE DISTANCE.

B - 1/2"Ø HILTI KWIK BOLT TZ ANCHOR W/ 3 1/4" Min. EMBEDMENT INTO 6" Min. THICK POURED CONCRETE (Min. f'c = 3 ksi) BEYOND ANY FINISH MATERIAL, W/ 7 1/2" MIN. EDGE DISTANCE.

C - 1/2"Ø HILTI HUS-H SCREW ANCHOR W/ 3" Min. EMBEDMENT INTO 4" Min. THICK POURED CONCRETE (Min. f'c = 3 ksi) BEYOND ANY FINISH MATERIAL, W/ 3 3/4" MIN. EDGE DISTANCE.

D - 1/2"Ø-13 TYPE "F" GRADE 5 BOLT TO 1/4" MIN. THK. ASTM A-36 STEEL W/ 1" Min. EDGE DISTANCE OR 1/2"Ø -13 SAE GALVANIZED STEEL GRADE 5 HHB THRU BOLT W/ NUT & LOCK WASHER TO 1/4" Min. THK. ASTM A-36 STEEL W/ 1" MIN. EDGE DISTANCE.

FLORIDA BUILDING CODE (High Velocity Hurricane Zone)

HR-251 SSG CAPTURED CURTAIN WALL SYSTEM LARGE & SMALL MISSILE WITH INSULATING LAMINATED GLASS

M.C.V./A.G. DRAWN BY | 11/18/11 DATE | 11-125 DRAWING No | SHEET 12 OF 33

Oldcastle BuildingEnvelope™
803 Airport Rd - Terrell, TX 75160
www.OldcastleBE.com - Phone 800-869-4567

REV. No	DESCRIPTION	DATE
1	OLD 10-014	11/18/11

REV. No	DESCRIPTION	DATE
-	-	-
-	-	-

©2010 TILTECO, INC

TILTECO INC.
TILLIT TESTING & ENGINEERING COMPANY
6355 N.W. 36th. St. Ste. 305, VIRGINIA GARDENS, FL 33166
Phone : (305)871-1530 , Fax : (305)871-1531
e-mail: tilteco@aol.com
EB-0006719
WALTER A. TILLIT Jr. P.E.
FLORIDA Lic. # 44167

WALTER A. TILLIT JR. LICENSE No. 44167 STATE OF FLORIDA PROFESSIONAL ENGINEER
11/18/11

P.E. SEAL/SIGNATURE/DATE

PRODUCT REVISED as complying with the Florida Building Code
Acceptance No 11-1206.09
Expiration Date FEB 17, 2016
By Miami-Dade Product Control

MIAMI-DADE COUNTY

MAXIMUM A.S.D. DESIGN PRESSURE RATING FOR TWIN SPAN MULLION & JAMB MULLION HEAD ANCHOR CONNECTIONS

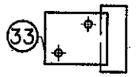

TWIN SPAN JAMB MULLION : HEAD CONNECTION *
W/ (1) 6"x 3 1/2" x 4 1/4" LONG ANCHOR #33

TYPE 1 **		MAXIMUM A.S.D. DESIGN PRESSURE RATING (psf)			
MAXIMUM MULLION SPAN	EFFECTIVE SPACING	POURED CONCRETE (Min. fc = 3ksi) SUBSTRATE			1/4" Min. THK ASTM A-36 STEEL SUBSTRATE
		FASTENERS TYPES			FASTENERS
"L" (ft-in)	"b" (ft-in)	A	B	C	D
8 '-0 "	3 '-0 "	81.4	84.9	90.0	90.0
	3 '-6 "	69.8	72.8	89.8	90.0
	4 '-0 "	61.0	63.7	78.6	90.0
	4 '-1 "	60.0	62.6	77.3	90.0
	5 '-0 "	48.8	50.9	62.9	90.0
8 '-6 "	3 '-0 "	76.6	79.9	90.0	90.0
	3 '-6 "	65.6	68.5	84.5	90.0
	4 '-0 "	57.4	59.9	74.0	90.0
	4 '-1 "	56.5	59.0	72.8	90.0
	5 '-0 "	46.0	48.0	59.2	90.0
9 '-0 "	3 '-0 "	72.3	75.5	90.0	90.0
	3 '-6 "	62.0	64.7	79.8	90.0
	4 '-0 "	54.3	56.6	69.9	90.0
	4 '-1 "	53.4	55.7	68.7	90.0
	5 '-0 "	43.4	45.3	55.9	90.0
9 '-6 "	3 '-0 "	68.5	71.5	88.2	90.0
	3 '-6 "	58.7	61.3	75.6	90.0
	4 '-0 "	51.4	53.6	66.2	90.0
	4 '-1 "	50.5	52.7	65.1	90.0
	5 '-0 "	41.1	42.9	52.9	90.0
10 '-0 "	3 '-0 "	65.1	67.9	83.8	90.0
	3 '-6 "	55.8	58.2	71.9	90.0
	4 '-0 "	48.8	50.9	62.9	90.0
	4 '-1 "	48.0	50.1	61.8	90.0
	5 '-0 "	39.1	40.8	50.3	90.0
10 '-6 "	3 '-0 "	62.0	64.7	79.8	90.0
	3 '-6 "	53.1	55.5	68.4	90.0
	4 '-0 "	46.5	48.5	59.9	90.0
	4 '-1 "	45.7	47.7	58.9	90.0
	5 '-0 "	37.2	38.8	47.9	90.0
11 '-0 "	3 '-0 "	59.2	61.8	76.2	90.0
	3 '-6 "	50.7	52.9	65.3	90.0
	4 '-0 "	44.4	46.3	57.2	90.0
	4 '-1 "	43.7	45.6	56.2	90.0
	5 '-0 "	35.5	37.1	45.7	90.0
11 '-6 "	3 '-0 "	56.6	59.1	72.9	90.0
	3 '-6 "	48.5	50.6	62.5	90.0
	4 '-0 "	42.5	44.3	54.7	90.0
	4 '-1 "	41.8	43.6	53.8	90.0
	5 '-0 "	34.0	35.4	43.7	90.0
12 '-0 "	3 '-0 "	54.3	56.6	69.9	90.0
	3 '-6 "	46.5	48.5	59.9	90.0
	4 '-0 "	40.7	42.5	52.4	90.0
	4 '-1 "	40.0	41.8	51.5	90.0
	5 '-0 "	32.6	34.0	41.9	90.0
12 '-6 "	3 '-0 "	52.1	54.3	67.1	90.0
	3 '-6 "	44.6	46.6	57.5	90.0
	4 '-0 "	39.1	40.8	50.3	90.0
	4 '-1 "	38.4	40.1	49.5	90.0
	5 '-0 "	31.2	32.6	40.2	90.0

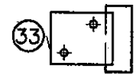

TWIN SPAN JAMB MULLION : HEAD CONNECTION *
W/ (1) 6"x 3 1/2" x 4 1/4" LONG ANCHOR #33

TYPE 2 **		MAXIMUM A.S.D DESIGN PRESSURE RATING (psf)			
MAXIMUM MULLION SPAN	EFFECTIVE SPACING	POURED CONCRETE (Min. fc = 3ksi) SUBSTRATE			1/4" Min. THK ASTM A-36 STEEL SUBSTRATE
		FASTENERS TYPES			FASTENERS
"L" (ft-in)	"b" (ft-in)	A	B	C	D
8 '-0 "	3 '-0 "	72.7	75.8	90.0	90.0
	3 '-6 "	62.3	65.0	80.2	90.0
	4 '-0 "	54.5	56.9	70.2	90.0
	4 '-1 "	53.6	55.9	69.0	90.0
	5 '-0 "	43.6	45.5	56.1	90.0
8 '-6 "	3 '-0 "	68.4	71.4	88.1	90.0
	3 '-6 "	58.6	61.2	75.5	90.0
	4 '-0 "	51.3	53.5	66.0	90.0
	4 '-1 "	50.4	52.6	65.0	90.0
	5 '-0 "	41.0	42.8	52.8	90.0
9 '-0 "	3 '-0 "	64.6	67.4	83.2	90.0
	3 '-6 "	55.4	57.8	71.3	90.0
	4 '-0 "	48.4	50.5	62.4	90.0
	4 '-1 "	47.6	49.7	61.3	90.0
	5 '-0 "	38.8	40.4	49.9	90.0
9 '-6 "	3 '-0 "	61.2	63.8	78.8	90.0
	3 '-6 "	52.4	54.7	67.5	90.0
	4 '-0 "	45.9	47.9	59.1	90.0
	4 '-1 "	45.1	47.1	58.1	90.0
	5 '-0 "	36.7	38.3	47.3	90.0
10 '-0 "	3 '-0 "	58.1	60.7	74.9	90.0
	3 '-6 "	49.8	52.0	64.2	90.0
	4 '-0 "	43.6	45.5	56.1	90.0
	4 '-1 "	42.9	44.7	55.2	90.0
	5 '-0 "	34.9	36.4	44.9	90.0
10 '-6 "	3 '-0 "	55.4	57.8	71.3	90.0
	3 '-6 "	47.4	49.5	61.1	90.0
	4 '-0 "	41.5	43.3	53.5	90.0
	4 '-1 "	40.8	42.6	52.6	90.0
	5 '-6 "	30.2	31.5	38.9	89.5
11 '-0 "	3 '-0 "	52.8	55.1	68.0	90.0
	3 '-6 "	45.3	47.3	58.3	90.0
	4 '-0 "	39.6	41.4	51.0	90.0
	4 '-1 "	39.0	40.7	50.2	90.0
	5 '-0 "	31.7	33.1	40.8	90.0
11 '-6 "	3 '-0 "	50.5	52.7	65.1	90.0
	3 '-6 "	43.3	45.2	55.8	90.0
	4 '-0 "	37.9	39.6	48.8	90.0
	4 '-1 "	37.3	38.9	48.0	90.0
	5 '-0 "	30.3	31.6	39.1	89.9
12 '-0 "	3 '-0 "	48.4	50.5	62.4	90.0
	3 '-6 "	41.5	43.3	53.5	90.0
	4 '-0 "	36.3	37.9	46.8	90.0
	4 '-1 "	35.7	37.3	46.0	90.0
	5 '-0 "	29.1	30.3	37.4	86.1
12 '-6 "	3 '-0 "	46.5	48.5	59.9	90.0
	3 '-6 "	39.9	41.6	51.3	90.0
	4 '-0 "	34.9	36.4	44.9	90.0
	4 '-1 "	34.3	35.8	44.2	90.0
	5 '-0 "	27.9	29.1	35.9	82.7

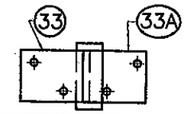

TWIN SPAN MULLION: HEAD CONNECTION *
W/ (2) 6"x 3 1/2" x 4 1/4" LONG ANCHOR #33

TYPE 1 & 2 **		MAXIMUM A.S.D DESIGN PRESSURE RATING (psf)			
MAXIMUM MULLION SPAN	EFFECTIVE SPACING	POURED CONCRETE (Min. fc = 3ksi) SUBSTRATE			1/4" Min. THK ASTM A-36 STEEL SUBSTRATE
		FASTENERS TYPES			FASTENERS
"L" (ft-in)	"b" (ft-in)	A	B	C	D
8 '-0 "	3 '-0 "	90.0	90.0	90.0	90.0
	3 '-6 "	90.0	90.0	90.0	90.0
	4 '-0 "	90.0	90.0	90.0	90.0
	4 '-1 "	90.0	90.0	90.0	90.0
	5 '-0 "	90.0	90.0	90.0	90.0
8 '-6 "	3 '-0 "	90.0	90.0	90.0	90.0
	3 '-6 "	90.0	90.0	90.0	90.0
	4 '-0 "	90.0	90.0	90.0	90.0
	4 '-1 "	90.0	90.0	90.0	90.0
	5 '-0 "	90.0	90.0	90.0	90.0
9 '-0 "	3 '-0 "	90.0	90.0	90.0	90.0
	3 '-6 "	90.0	90.0	90.0	90.0
	4 '-0 "	90.0	90.0	90.0	90.0
	4 '-1 "	90.0	90.0	90.0	90.0
	5 '-0 "	90.0	90.0	90.0	90.0
9 '-6 "	3 '-0 "	90.0	90.0	90.0	90.0
	3 '-6 "	90.0	90.0	90.0	90.0
	4 '-0 "	90.0	90.0	90.0	90.0
	4 '-1 "	90.0	90.0	90.0	90.0
	5 '-0 "	90.0	90.0	90.0	90.0
10 '-0 "	3 '-0 "	90.0	90.0	90.0	90.0
	3 '-6 "	90.0	90.0	90.0	90.0
	4 '-0 "	90.0	90.0	90.0	90.0
	4 '-1 "	90.0	90.0	90.0	90.0
	5 '-0 "	90.0	90.0	90.0	90.0
10 '-6 "	3 '-0 "	90.0	90.0	90.0	90.0
	3 '-6 "	90.0	90.0	90.0	90.0
	4 '-0 "	90.0	90.0	90.0	90.0
	4 '-1 "	90.0	90.0	90.0	90.0
	5 '-0 "	90.0	90.0	90.0	90.0
11 '-0 "	3 '-0 "	90.0	90.0	90.0	90.0
	3 '-6 "	90.0	90.0	90.0	90.0
	4 '-0 "	90.0	90.0	90.0	90.0
	4 '-1 "	90.0	90.0	90.0	90.0
	5 '-0 "	90.0	90.0	90.0	90.0
11 '-6 "	3 '-0 "	90.0	90.0	90.0	90.0
	3 '-6 "	90.0	90.0	90.0	90.0
	4 '-0 "	90.0	90.0	90.0	90.0
	4 '-1 "	90.0	90.0	90.0	90.0
	5 '-0 "	90.0	90.0	90.0	90.0
12 '-0 "	3 '-0 "	90.0	90.0	90.0	90.0
	3 '-6 "	90.0	90.0	90.0	90.0
	4 '-0 "	90.0	90.0	90.0	90.0
	4 '-1 "	90.0	90.0	90.0	90.0
	5 '-0 "	90.0	90.0	90.0	90.0
12 '-6 "	3 '-0 "	90.0	90.0	90.0	90.0
	3 '-6 "	90.0	90.0	90.0	90.0
	4 '-0 "	90.0	90.0	90.0	90.0
	4 '-1 "	90.0	90.0	90.0	90.0
	5 '-0 "	90.0	90.0	90.0	90.0

* SEE CONNECTION DETAILS ON SHEETS 23, 24 & 25 FOR FASTENERS QUANTITY & LOCATIONS AT MULLION ₮.

** TYPE 1 CONNECTION:

CORRESPONDS TO CONTINUOUS TWIN MULLION SPAN INSTALLATIONS.

TYPE 2 CONNECTION:

CORRESPONDS TO SPLICED TWIN MULLION SPAN INSTALLATIONS.

FASTENERS TYPES & SUBSTRATES REQUIREMENTS

A - 1/2"Ø HILTI KWIK BOLT TZ ANCHOR W/ 3 1/4" Min. EMBEDMENT INTO 8" Min. THICK POURED CONCRETE (Min. f'c = 3 ksi) BEYOND ANY FINISH MATERIAL, W/ 6" MIN. EDGE DISTANCE.

B - 1/2"Ø HILTI KWIK BOLT TZ ANCHOR W/ 3 1/4" Min. EMBEDMENT INTO 6" Min. THICK POURED CONCRETE (Min. f'c = 3 ksi) BEYOND ANY FINISH MATERIAL, W/ 7 1/2" MIN. EDGE DISTANCE.

C - 1/2"Ø HILTI HUS-H SCREW ANCHOR W/ 3" Min. EMBEDMENT INTO 4" Min. THICK POURED CONCRETE (Min. f'c = 3 ksi) BEYOND ANY FINISH MATERIAL, W/ 3 3/4" MIN. EDGE DISTANCE.

D - 1/2"Ø-13 TYPE "F" GRADE 5 BOLT TO 1/4" MIN. THK. ASTM A-36 STEEL W/ 1" MIN. EDGE DISTANCE OR 1/2"Ø -13 SAE GALVANIZED STEEL GRADE 5 HHB THRU BOLT W/ NUT & LOCK WASHER TO 1/4" MIN. THK. ASTM A-36 STEEL W/ 1" MIN. EDGE DISTANCE.

₮ MAX. PRESSURE RATING FOR JAMB CONNECTION @ HEAD W/ ANCHOR 33 IS ± 100 psf FOR SINGLE SPAN CURTAIN WALL AND ±90 psf FOR TWIN SPAN CURTAIN WALL, VALID FOR ALL EFFECTIVE WIDTHS. SEE CONNECTION DETAILS ON SHEET 25 FOR FASTENERS QUANTITY AND LOCATION AT JAMB.

FLORIDA BUILDING CODE (High Velocity Hurricane Zone)

HR-251 SSG CAPTURED CURTAIN WALL SYSTEM LARGE & SMALL MISSILE WITH INSULATING LAMINATED GLASS

M.C.V./A.G. DRAWN BY

11/18/11 DATE

11-125 DRAWING No

SHEET 13 OF 33

Oldcastle BuildingEnvelope™
803 Airport Rd - Terrell, TX 75160
www.OldcastleBE.com - Phone 800-869-4567

REV. No	DESCRIPTION	DATE
1	OLD 10-014	11/18/11
-	-	-

REV. No	DESCRIPTION	DATE
-	-	-
-	-	-

©2010 TILTECO, INC

TILTECO INC.
TILLIT TESTING & ENGINEERING COMPANY
6355 N.W. 36th. St. Ste. 305, VIRGINIA GARDENS, FL 33166
Phone : (305)871-1530 . Fax : (305)871-1531
e-mail: tiliteco@aol.com
EB-0006719
WALTER A. TILLIT Jr. P.E.
FLORIDA Lic. # 44167

WALTER A. TILLIT JR. LICENSE No. 44167 STATE OF FLORIDA PROFESSIONAL ENGINEER

11/18/2011

P.E. SEAL/SIGNATURE/DATE

PRODUCT REVISED
as complying with the Florida Building Code
Acceptance No 11-1206.09
Expiration Date FEB-17-2016
By
Miami-Dade Product Control

MIAMI-DADE COUNTY

MAXIMUM A.S.D. DESIGN PRESSURE RATING FOR JAMBS AT SINGLE SPAN CURTAIN WALL FASTENED TO EXISTING STRUCTURE W/ 3/8"Ø FASTENERS (SEE ALSO SHEET 15)

OPTION #2 : 2 FASTENERS CONNECTION

MAXIMUM MULLION SPAN "L" (ft-in)	EFFECTIVE SPACING $b = S_5/2$ * "b" (ft-in)	MAXIMUM A.S.D. DESIGN PRESSURE RATING (psf) — POURED CONCRETE (Min. f'c = 3ksi) SUBSTRATE — FASTENER TYPES: E	F	G	GROUT FILLED CONCRETE BLOCK SUBSTRATE — FASTENER TYPES: H	I	1/4" Min. THK ASTM A-36 STEEL SUBSTRATE — FASTENER: J
8 '- 0 "	2 '- 0 "	90.0	90.0	90.0	90.0	90.0	90.0
	2 '- 6 "	90.0	90.0	78.5	90.0	78.5	90.0
	3 '- 3 "	74.0	74.0	60.4	74.0	60.4	83.8
8 '- 6 "	2 '- 0 "	90.0	90.0	90.0	90.0	90.0	90.0
	2 '- 6 "	90.0	90.0	73.9	90.0	73.9	90.0
	3 '- 3 "	69.7	69.7	56.8	69.7	56.8	78.9
9 '- 0 "	2 '- 0 "	90.0	90.0	87.2	90.0	87.2	90.0
	2 '- 6 "	85.5	85.5	69.8	85.5	69.8	90.0
	3 '- 3 "	65.8	65.8	53.7	65.8	53.7	74.5
9 '- 6 "	2 '- 0 "	90.0	90.0	82.6	90.0	82.6	90.0
	2 '- 6 "	81.0	81.0	66.1	81.0	66.1	90.0
	3 '- 3 "	62.3	62.3	50.9	62.3	50.9	70.6
10 '- 0 "	2 '- 0 "	90.0	90.0	78.5	90.0	78.5	90.0
	2 '- 6 "	77.0	77.0	62.8	77.0	62.8	87.2
	3 '- 3 "	59.2	59.2	48.3	59.2	48.3	67.0
10 '- 6 "	2 '- 0 "	90.0	90.0	74.8	90.0	74.8	90.0
	2 '- 6 "	73.3	73.3	59.8	73.3	59.8	83.0
	3 '- 3 "	56.4	56.4	46.0	56.4	46.0	63.9
11 '- 0 "	2 '- 0 "	87.5	87.5	71.4	87.5	71.4	90.0
	2 '- 6 "	70.0	70.0	57.1	70.0	57.1	79.2
	3 '- 3 "	53.8	53.8	43.9	53.8	43.9	60.9
11 '- 6 "	2 '- 0 "	83.7	83.7	68.3	83.7	68.3	90.0
	2 '- 6 "	66.9	66.9	54.6	66.9	54.6	75.8
	3 '- 3 "	51.5	51.5	42.0	51.5	42.0	58.3
12 '- 0 "	2 '- 0 "	80.2	80.2	65.4	80.2	65.4	90.0
	2 '- 6 "	64.2	64.2	52.3	64.2	52.3	72.6
	3 '- 3 "	49.4	49.4	40.3	49.4	40.3	55.9

OPTION #3 : 3 FASTENERS CONNECTION

MAXIMUM MULLION SPAN "L" (ft-in)	EFFECTIVE SPACING $b = S_5/2$ * "b" (ft-in)	MAXIMUM A.S.D DESIGN PRESSURE RATING (psf) — POURED CONCRETE (Min. f'c = 3ksi) SUBSTRATE — FASTENER TYPES: E	F	G	GROUT FILLED CONCRETE BLOCK SUBSTRATE — FASTENER TYPES: H	I	1/4" Min. THK ASTM A-36 STEEL SUBSTRATE — FASTENER: J
8 '- 0 "	2 '- 0 "	90.0	90.0	90.0	90.0	90.0	90.0
	2 '- 6 "	90.0	90.0	90.0	90.0	90.0	90.0
	3 '- 3 "	90.0	90.0	90.0	90.0	90.0	90.0
8 '- 6 "	2 '- 0 "	90.0	90.0	90.0	90.0	90.0	90.0
	2 '- 6 "	90.0	90.0	90.0	90.0	90.0	90.0
	3 '- 3 "	90.0	90.0	85.3	90.0	85.3	90.0
9 '- 0 "	2 '- 0 "	90.0	90.0	90.0	90.0	90.0	90.0
	2 '- 6 "	90.0	90.0	90.0	90.0	90.0	90.0
	3 '- 3 "	90.0	90.0	80.5	90.0	80.5	90.0
9 '- 6 "	2 '- 0 "	90.0	90.0	90.0	90.0	90.0	90.0
	2 '- 6 "	90.0	90.0	90.0	90.0	90.0	90.0
	3 '- 3 "	90.0	90.0	76.3	90.0	76.3	90.0
10 '- 0 "	2 '- 0 "	90.0	90.0	90.0	90.0	90.0	90.0
	2 '- 6 "	90.0	90.0	90.0	90.0	90.0	90.0
	3 '- 3 "	88.8	88.8	72.5	88.8	72.5	90.0
10 '- 6 "	2 '- 0 "	90.0	90.0	90.0	90.0	90.0	90.0
	2 '- 6 "	90.0	90.0	89.7	90.0	89.7	90.0
	3 '- 3 "	84.6	84.6	69.0	84.6	69.0	90.0
11 '- 0 "	2 '- 0 "	90.0	90.0	90.0	90.0	90.0	90.0
	2 '- 6 "	90.0	90.0	85.7	90.0	85.7	90.0
	3 '- 3 "	80.8	80.8	65.9	80.8	65.9	90.0
11 '- 6 "	2 '- 0 "	90.0	90.0	90.0	90.0	90.0	90.0
	2 '- 6 "	90.0	90.0	81.9	90.0	81.9	90.0
	3 '- 3 "	77.2	77.2	63.0	77.2	63.0	87.4
12 '- 0 "	2 '- 0 "	90.0	90.0	90.0	90.0	90.0	90.0
	2 '- 6 "	90.0	90.0	78.5	90.0	78.5	90.0
	3 '- 3 "	74.0	74.0	60.4	74.0	60.4	83.8

FASTENER TYPES & SUBSTRATES REQUIREMENTS:

E - 3/8"Ø HILTI KWIK BOLT TZ ANCHOR W/ 2" Min. EMBEDMENT INTO POURED CONCRETE (Min. f'c = 3 ksi) BEYOND ANY FINISH MATERIAL, W/ 4" MIN. EDGE DISTANCE.

F - 3/8"Ø HILTI KWIK BOLT 3 ANCHOR W/ 2 1/2" Min. EMBEDMENT INTO POURED CONCRETE (Min. f'c = 3 ksi) BEYOND ANY FINISH MATERIAL, W/ 4" MIN. EDGE DISTANCE.

G - 3/8"Ø HILTI HUS-H SCREW ANCHOR W/ 2 3/4" Min. EMBEDMENT INTO POURED CONCRETE (Min. f'c = 3 ksi) BEYOND ANY FINISH MATERIAL, W/ 5" MIN. EDGE DISTANCE.

H - 3/8"Ø HILTI KWIK BOLT 3 ANCHOR W/ 2 1/2" Min. EMBEDMENT INTO GROUT FILLED CONCRETE BLOCK BEYOND ANY FINISH MATERIAL, W/ 4" MIN. EDGE DISTANCE.

I - 3/8"Ø HILTI HUS-H SCREW ANCHOR W/ 3" Min. EMBEDMENT INTO GROUT FILLED CONCRETE BLOCK BEYOND ANY FINISH MATERIAL, W/ 3 3/4" MIN. EDGE DISTANCE.

J - 3/8"Ø-13 TYPE "F" GRADE 5 BOLT TO 1/4" MIN. THK. ASTM A-36 STEEL W/ 1" MIN. EDGE DISTANCE OR 3/8"Ø-13 SAE GRADE 5, GALVANIZED STEEL BOLT W/ LOCK WASHER & NUT TO 1/4" Min. THK. ASTM A-36 STEEL & MIN. E.D. = 3/4".

FASTENERS LOCATION

OPTION # 1 (ELEVATION)
(1) FASTENER CONNECTION

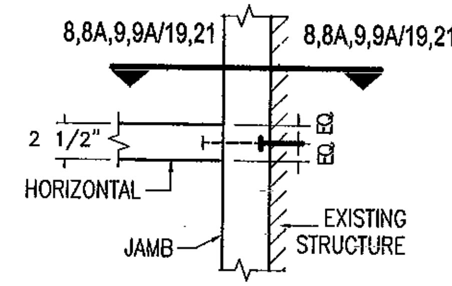

OPTION # 2 (ELEVATION)
(2) FASTENERS CONNECTION

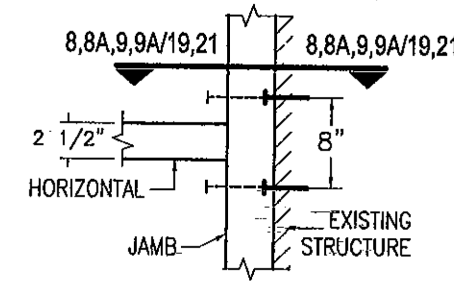

OPTION # 3 (ELEVATION)
(3) FASTENERS CONNECTION

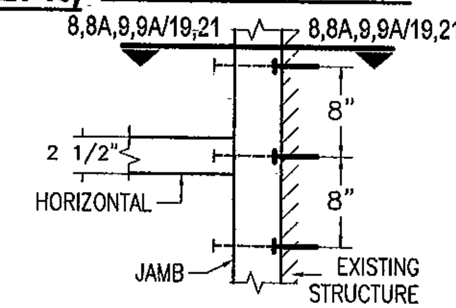

MAXIMUM A.S.D. PRESSURE RATING FOR JAMBS AT SINGLE SPAN CURTAIN WALL FASTENED TO EXISTING STRUCTURE W/ 1/2"Ø FASTENERS (SEE ALSO SHEET 15)

OPTION #1 : 2 FASTENER CONNECTION

MAXIMUM MULLION SPAN "L" (ft-in)	EFFECTIVE SPACING $b = S_5/2$ * "b" (ft-in)	MAXIMUM A.S.D. DESIGN PRESSURE RATING (psf) — POURED CONCRETE (Min. f'c = 3ksi) SUBSTRATE — FASTENER TYPES: K	L	M	GROUT FILLED CONCRETE BLOCK SUBSTRATE — FASTENER TYPES: N	O	1/4" Min. THK ASTM A-36 STEEL SUBSTRATE — FASTENER: P
8 '- 0 "	2 '- 0 "	90.0	90.0	90.0	90.0	90.0	90.0
	2 '- 6 "	90.0	90.0	90.0	90.0	90.0	90.0
	3 '- 3 "	90.0	90.0	90.0	90.0	73.1	90.0
8 '- 6 "	2 '- 0 "	90.0	90.0	90.0	90.0	90.0	90.0
	2 '- 6 "	90.0	90.0	90.0	90.0	89.4	90.0
	3 '- 3 "	90.0	90.0	90.0	90.0	68.8	90.0
9 '- 0 "	2 '- 0 "	90.0	90.0	90.0	90.0	90.0	90.0
	2 '- 6 "	90.0	90.0	90.0	90.0	84.4	90.0
	3 '- 3 "	90.0	90.0	90.0	90.0	65.0	90.0
9 '- 6 "	2 '- 0 "	90.0	90.0	90.0	90.0	90.0	90.0
	2 '- 6 "	90.0	90.0	90.0	90.0	80.0	90.0
	3 '- 3 "	90.0	90.0	90.0	90.0	61.5	90.0
10 '- 0 "	2 '- 0 "	90.0	90.0	90.0	90.0	90.0	90.0
	2 '- 6 "	90.0	90.0	90.0	90.0	76.0	90.0
	3 '- 3 "	90.0	90.0	90.0	90.0	58.5	90.0
10 '- 6 "	2 '- 0 "	90.0	90.0	90.0	90.0	90.0	90.0
	2 '- 6 "	90.0	90.0	90.0	90.0	72.4	90.0
	3 '- 3 "	90.0	90.0	90.0	90.0	55.7	90.0
11 '- 0 "	2 '- 0 "	90.0	90.0	90.0	90.0	86.4	90.0
	2 '- 6 "	90.0	90.0	90.0	90.0	69.1	90.0
	3 '- 3 "	90.0	90.0	90.0	90.0	53.1	90.0
11 '- 6 "	2 '- 0 "	90.0	90.0	90.0	90.0	82.6	90.0
	2 '- 6 "	90.0	90.0	90.0	90.0	66.1	90.0
	3 '- 3 "	90.0	90.0	90.0	90.0	50.8	90.0
12 '- 0 "	2 '- 0 "	90.0	90.0	90.0	90.0	79.2	90.0
	2 '- 6 "	90.0	90.0	90.0	90.0	63.3	90.0
	3 '- 3 "	90.0	90.0	90.0	90.0	48.7	90.0

OPTION #2 : 3 FASTENERS CONNECTION

MAXIMUM MULLION SPAN "L" (ft-in)	EFFECTIVE SPACING $b = S_5/2$ * "b" (ft-in)	MAXIMUM A.S.D. DESIGN PRESSURE RATING (p.s.f.) — POURED CONCRETE (Min. f'c = 3ksi) SUBSTRATE — FASTENER TYPES: K	L	M	GROUT FILLED CONCRETE BLOCK SUBSTRATE — FASTENER TYPES: N	O	1/4" Min. THK ASTM A-36 STEEL SUBSTRATE — FASTENER: P
8 '- 0 "	2 '- 0 "	90.0	90.0	90.0	90.0	90.0	90.0
	2 '- 6 "	90.0	90.0	90.0	90.0	90.0	90.0
	3 '- 3 "	90.0	90.0	90.0	90.0	90.0	90.0
8 '- 6 "	2 '- 0 "	90.0	90.0	90.0	90.0	90.0	90.0
	2 '- 6 "	90.0	90.0	90.0	90.0	90.0	90.0
	3 '- 3 "	90.0	90.0	90.0	90.0	90.0	90.0
9 '- 0 "	2 '- 0 "	90.0	90.0	90.0	90.0	90.0	90.0
	2 '- 6 "	90.0	90.0	90.0	90.0	90.0	90.0
	3 '- 3 "	90.0	90.0	90.0	90.0	90.0	90.0
9 '- 6 "	2 '- 0 "	90.0	90.0	90.0	90.0	90.0	90.0
	2 '- 6 "	90.0	90.0	90.0	90.0	90.0	90.0
	3 '- 3 "	90.0	90.0	90.0	90.0	90.0	90.0
10 '- 0 "	2 '- 0 "	90.0	90.0	90.0	90.0	90.0	90.0
	2 '- 6 "	90.0	90.0	90.0	90.0	90.0	90.0
	3 '- 3 "	90.0	90.0	90.0	90.0	87.7	90.0
10 '- 6 "	2 '- 0 "	90.0	90.0	90.0	90.0	90.0	90.0
	2 '- 6 "	90.0	90.0	90.0	90.0	90.0	90.0
	3 '- 3 "	90.0	90.0	90.0	90.0	83.5	90.0
11 '- 0 "	2 '- 0 "	90.0	90.0	90.0	90.0	90.0	90.0
	2 '- 6 "	90.0	90.0	90.0	90.0	90.0	90.0
	3 '- 3 "	90.0	90.0	90.0	90.0	79.7	90.0
11 '- 6 "	2 '- 0 "	90.0	90.0	90.0	90.0	90.0	90.0
	2 '- 6 "	90.0	90.0	90.0	90.0	90.0	90.0
	3 '- 3 "	90.0	90.0	90.0	90.0	76.3	90.0
12 '- 0 "	2 '- 0 "	90.0	90.0	90.0	90.0	90.0	90.0
	2 '- 6 "	90.0	90.0	90.0	90.0	90.0	90.0
	3 '- 3 "	90.0	90.0	90.0	90.0	73.1	90.0

FASTENER TYPES & SUBSTRATES REQUIREMENTS:

K - 1/2"Ø HILTI KWIK BOLT TZ ANCHOR W/ 2" Min. EMBEDMENT INTO POURED CONCRETE (Min. f'c = 3 ksi) BEYOND ANY FINISH MATERIAL, W/ 4" MIN. EDGE DISTANCE.

L - 1/2"Ø HILTI KWIK BOLT 3 ANCHOR W/ 3 1/2" Min. EMBEDMENT INTO POURED CONCRETE (Min. f'c = 3 ksi) BEYOND ANY FINISH MATERIAL, W/ 4" MIN. EDGE DISTANCE.

M - 1/2"Ø HILTI HUS-H SCREW ANCHOR W/ 3" Min. EMBEDMENT INTO POURED CONCRETE (Min. f'c = 3 ksi) BEYOND ANY FINISH MATERIAL, W/ 4" MIN. EDGE DISTANCE.

N - 1/2"Ø HILTI KWIK BOLT 3 ANCHOR W/ 3 1/2" Min. EMBEDMENT INTO GROUT FILLED CONCRETE BLOCK BEYOND ANY FINISH MATERIAL, W/ 4" MIN. EDGE DISTANCE.

O - 1/2"Ø HILTI HUS-H SCREW ANCHOR W/ 3" Min. EMBEDMENT INTO GROUT FILLED CONCRETE BLOCK BEYOND ANY FINISH MATERIAL, W/ 3 3/4" MIN. EDGE DISTANCE.

P - 1/2"Ø-13 TYPE "F" GRADE 5 BOLT TO 1/4" MIN. THK. ASTM A-36 STEEL W/ 1" MIN. EDGE DISTANCE OR 1/2"Ø-13 SAE GRADE 5, GALVANIZED STEEL BOLT W/ LOCK WASHER & NUT TO 1/4" MIN. THK. ASTM A-36 STEEL & MIN. E.D. = 1".

* SEE SHEET 9 FOR EFFECTIVE SPACING DEFINITION AT ISOMETRIC

FLORIDA BUILDING CODE (High Velocity Hurricane Zone)

HR-251 SSG CAPTURED CURTAIN WALL SYSTEM LARGE & SMALL MISSILE WITH INSULATING LAMINATED GLASS

Oldcastle BuildingEnvelope™
803 Airport Rd - Terrell, TX 75160
www.OldcastleBE.com - Phone 800-869-4567

DRAWN BY	DATE	DRAWING No	SHEET
M.C.V./A.G.	11/18/11	11-125	SHEET 14 OF 33

REV. No	DESCRIPTION	DATE	REV. No	DESCRIPTION	DATE
1	OLD 10-014	11/18/11	-	-	-
-	SCHEDULES FIXED	02/10/11	-	-	-

©2010 TILTECO, INC

TILTECO INC.
TILLIT TESTING & ENGINEERING COMPANY
6355 N.W. 36th. St., Ste. 305, VIRGINIA GARDENS, FL 33166
Phone : (305)871-1530 . Fax : (305)871-1531
e-mail: tilteco@aol.com
EB-0006719
WALTER A. TILLIT Jr. P.E.
FLORIDA Lic. # 44167

WALTER A. TILLIT JR. LICENSE No. 44167 STATE OF FLORIDA PROFESSIONAL ENGINEER

P.E. SEAL/SIGNATURE/DATE

PRODUCT REVISED
as complying with the Florida Building Code
Acceptance No 11-1206.09
Expiration Date FEB 14 2016
By
Miami Dade Product Control

MIAMI-DADE COUNTY

MAXIMUM A.S.D DESIGN PRESSURE RATING FOR JAMBS AT TWIN SPAN CURTAIN WALL FASTENED TO EXISTING STRUCTURE W/ 3/8"Ø FASTENERS

OPTION #1 : 3 FASTENERS CONNECTION

MAXIMUM MULLION SPAN "L" (ft-in)	EFFECTIVE SPACING b = S_s/2 * "b" (ft-in)	MAXIMUM A.S.D. DESIGN PRESSURE RATING (psf): POURED CONCRETE (Min. fc = 3ksi) SUBSTRATE, FASTENER TYPES E	F	G	GROUT FILLED CONCRETE BLOCK SUBSTRATE, FASTENER TYPES H	I	1/4" Min. THK ASTM A-36 STEEL SUBSTRATE, FASTENER J
8 '- 0 "	2 '- 0 "	57.5	57.5	58.6	57.5	58.6	81.3
	2 '- 6 "	46.0	46.0	46.9	46.0	46.9	65.1
	3 '- 3 "	35.4	35.4	36.1	35.4	36.1	50.0
8 '- 6 "	2 '- 0 "	57.0	57.0	58.1	57.0	58.1	80.6
	2 '- 6 "	45.6	45.6	46.5	45.6	46.5	64.5
	3 '- 3 "	35.1	35.1	35.7	35.1	35.7	49.6
9 '- 0 "	2 '- 0 "	55.8	55.8	56.9	55.8	56.9	79.0
	2 '- 6 "	44.7	44.7	45.5	44.7	45.5	63.2
	3 '- 3 "	34.4	34.4	35.0	34.4	35.0	48.6
9 '- 6 "	2 '- 0 "	54.4	54.4	55.4	54.4	55.4	76.9
	2 '- 6 "	43.5	43.5	44.3	43.5	44.3	61.5
	3 '- 3 "	33.4	33.4	34.1	33.4	34.1	47.3
10 '- 0 "	2 '- 0 "	52.7	52.7	53.8	52.7	53.8	74.6
	2 '- 6 "	42.2	42.2	43.0	42.2	43.0	59.7
	3 '- 3 "	32.4	32.4	33.1	32.4	33.1	45.9
10 '- 6 "	2 '- 0 "	51.0	51.0	52.0	51.0	52.0	72.2
	2 '- 6 "	40.8	40.8	41.6	40.8	41.6	57.8
	3 '- 3 "	31.4	31.4	32.0	31.4	32.0	44.4
11 '- 0 "	2 '- 0 "	49.3	49.3	50.3	49.3	50.3	69.8
	2 '- 6 "	39.5	39.5	40.3	39.5	40.3	55.9
	3 '- 3 "	30.4	30.4	31.0	30.4	31.0	43.0
11 '- 6 "	2 '- 0 "	47.7	47.7	48.6	47.7	48.6	67.5
	2 '- 6 "	38.1	38.1	38.9	38.1	38.9	54.0
	3 '- 3 "	29.3	29.3	29.9	29.3	29.9	41.5
12 '- 0 "	2 '- 0 "	46.1	46.1	47.0	46.1	47.0	65.2
	2 '- 6 "	36.9	36.9	37.6	36.9	37.6	52.2
	3 '- 3 "	28.4	28.4	28.9	28.4	28.9	40.1
12 '- 6 "	2 '- 0 "	44.5	44.5	45.4	44.5	45.4	63.0
	2 '- 6 "	35.6	35.6	36.3	35.6	36.3	50.4
	3 '- 3 "	27.4	27.4	28.0	27.4	28.0	38.8

OPTION #2 : 4 FASTENERS CONNECTION

MAXIMUM MULLION SPAN "L" (ft-in)	EFFECTIVE SPACING b = S_s/2 * "b" (ft-in)	MAXIMUM A.S.D. DESIGN PRESSURE RATING (psf): POURED CONCRETE (Min. fc = 3ksi) SUBSTRATE, FASTENER TYPES E	F	G	GROUT FILLED CONCRETE BLOCK SUBSTRATE, FASTENER TYPES H	I	1/4" Min. THK ASTM A-36 STEEL SUBSTRATE, FASTENER J
8 '- 0 "	2 '- 0 "	76.6	76.6	78.1	76.6	78.1	90.0
	2 '- 6 "	61.3	61.3	62.5	61.3	62.5	86.7
	3 '- 3 "	47.2	47.2	48.1	47.2	48.1	66.7
8 '- 6 "	2 '- 0 "	76.0	76.0	77.5	76.0	77.5	90.0
	2 '- 6 "	60.8	60.8	62.0	60.8	62.0	86.0
	3 '- 3 "	46.7	46.7	47.7	46.7	47.7	66.1
9 '- 0 "	2 '- 0 "	74.4	74.4	75.9	74.4	75.9	90.0
	2 '- 6 "	59.5	59.5	60.7	59.5	60.7	84.3
	3 '- 3 "	45.8	45.8	46.7	45.8	46.7	64.8
9 '- 6 "	2 '- 0 "	72.5	72.5	73.9	72.5	73.9	90.0
	2 '- 6 "	58.0	58.0	59.1	58.0	59.1	82.0
	3 '- 3 "	44.6	44.6	45.5	44.6	45.5	63.1
10 '- 0 "	2 '- 0 "	70.3	70.3	71.7	70.3	71.7	90.0
	2 '- 6 "	56.2	56.2	57.3	56.2	57.3	79.6
	3 '- 3 "	43.3	43.3	44.1	43.3	44.1	61.2
10 '- 6 "	2 '- 0 "	68.0	68.0	69.4	68.0	69.4	90.0
	2 '- 6 "	54.4	54.4	55.5	54.4	55.5	77.0
	3 '- 3 "	41.9	41.9	42.7	41.9	42.7	59.3
11 '- 0 "	2 '- 0 "	65.8	65.8	67.1	65.8	67.1	90.0
	2 '- 6 "	52.6	52.6	53.7	52.6	53.7	74.5
	3 '- 3 "	40.5	40.5	41.3	40.5	41.3	57.3
11 '- 6 "	2 '- 0 "	63.6	63.6	64.8	63.6	64.8	90.0
	2 '- 6 "	50.9	50.9	51.9	50.9	51.9	72.0
	3 '- 3 "	39.1	39.1	39.9	39.1	39.9	55.4
12 '- 0 "	2 '- 0 "	61.4	61.4	62.7	61.4	62.7	86.9
	2 '- 6 "	49.2	49.2	50.1	49.2	50.1	69.6
	3 '- 3 "	37.8	37.8	38.6	37.8	38.6	53.5
12 '- 6 "	2 '- 0 "	59.4	59.4	60.6	59.4	60.6	84.0
	2 '- 6 "	47.5	47.5	48.5	47.5	48.5	67.2
	3 '- 3 "	36.5	36.5	37.3	36.5	37.3	51.7

FASTENER TYPES & SUBSTRATES REQUIREMENTS:

E - 3/8"Ø HILTI KWIK BOLT TZ ANCHOR W/ 2" Min. EMBEDMENT INTO POURED CONCRETE (Min. f'c = 3 ksi) BEYOND ANY FINISH MATERIAL, W/ 4" MIN. EDGE DISTANCE.

F - 3/8"Ø HILTI KWIK BOLT 3 ANCHOR W/ 2 1/2" Min. EMBEDMENT INTO POURED CONCRETE (Min. f'c = 3 ksi) BEYOND ANY FINISH MATERIAL, W/ 4" MIN. EDGE DISTANCE.

G - 3/8"Ø HILTI HUS-H SCREW ANCHOR W/ 2 3/4" Min. EMBEDMENT INTO POURED CONCRETE (Min. f'c = 3 ksi) BEYOND ANY FINISH MATERIAL, W/ 5" MIN. EDGE DISTANCE.

H - 3/8"Ø HILTI KWIK BOLT 3 ANCHOR W/ 2 1/2" Min. EMBEDMENT INTO GROUT FILLED CONCRETE BLOCK BEYOND ANY FINISH MATERIAL, W/ 4" MIN. EDGE DISTANCE.

I - 3/8"Ø HILTI HUS-H SCREW ANCHOR W/ 3" Min. EMBEDMENT INTO GROUT FILLED CONCRETE BLOCK BEYOND ANY FINISH MATERIAL, W/ 3 3/4" MIN. EDGE DISTANCE.

J - 3/8"Ø-13 TYPE "F" GRADE 5 BOLT TO 1/4" MIN. THK. ASTM A-36 STEEL W/ 1" MIN. EDGE DISTANCE OR 3/8"Ø-13 SAE GRADE 5, GALVANIZED STEEL BOLT W/ LOCK WASHER & NUT TO 1/4" MIN. THK. ASTM A-36 STEEL & MIN. E.D. = 3/4".

FASTENERS LOCATION

OPTION # 1 (ELEVATION)
(3) FASTENERS CONNECTION

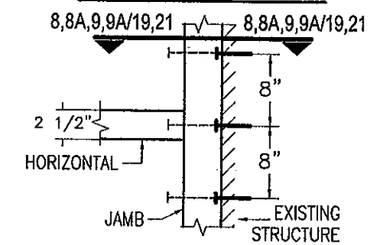

OPTION # 2 (ELEVATION)
(4) FASTENERS CONNECTION

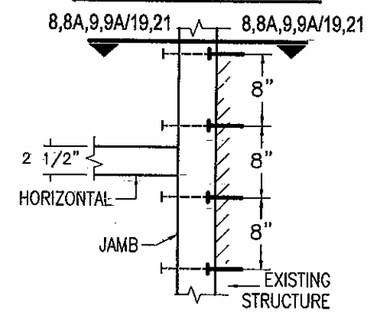

MAXIMUM A.S.D. DESIGN PRESSURE RATING FOR JAMBS AT TWIN SPAN CURTAIN WALL FASTENED TO EXISTING STRUCTURE W/ 1/2"Ø FASTENERS

OPTION #1 : 3 FASTENERS CONNECTION

MAXIMUM MULLION SPAN "L" (ft-in)	EFFECTIVE SPACING b = S_s/2 * "b" (ft-in)	MAXIMUM A.S.D. DESIGN PRESSURE RATING (psf): POURED CONCRETE (Min. fc = 3ksi) SUBSTRATE, FASTENER TYPES K	L	M	GROUT FILLED CONCRETE BLOCK SUBSTRATE, FASTENER TYPES N	O	1/4" Min. THK ASTM A-36 STEEL SUBSTRATE, FASTENER P
8 '- 0 "	2 '- 0 "	90.0	90.0	90.0	90.0	70.9	90.0
	2 '- 6 "	90.0	90.0	90.0	90.0	56.7	90.0
	3 '- 3 "	90.0	90.0	90.0	90.0	43.6	90.0
8 '- 6 "	2 '- 0 "	90.0	90.0	90.0	90.0	70.3	90.0
	2 '- 6 "	90.0	90.0	90.0	90.0	56.2	90.0
	3 '- 3 "	90.0	90.0	90.0	90.0	43.3	90.0
9 '- 0 "	2 '- 0 "	90.0	90.0	90.0	90.0	68.9	90.0
	2 '- 6 "	90.0	90.0	90.0	90.0	55.1	90.0
	3 '- 3 "	90.0	90.0	90.0	90.0	42.4	90.0
9 '- 6 "	2 '- 0 "	90.0	90.0	90.0	90.0	67.1	90.0
	2 '- 6 "	90.0	90.0	90.0	90.0	53.7	90.0
	3 '- 3 "	90.0	90.0	88.2	90.0	41.3	90.0
10 '- 0 "	2 '- 0 "	90.0	90.0	90.0	90.0	65.1	90.0
	2 '- 6 "	90.0	90.0	90.0	90.0	52.0	90.0
	3 '- 3 "	90.0	90.0	85.6	90.0	40.0	90.0
10 '- 6 "	2 '- 0 "	90.0	90.0	90.0	90.0	63.0	90.0
	2 '- 6 "	90.0	90.0	90.0	90.0	50.4	90.0
	3 '- 3 "	90.0	90.0	82.8	88.1	38.7	90.0
11 '- 0 "	2 '- 0 "	90.0	90.0	90.0	90.0	60.9	90.0
	2 '- 6 "	90.0	90.0	90.0	90.0	48.7	90.0
	3 '- 3 "	90.0	90.0	80.1	85.2	37.5	90.0
11 '- 6 "	2 '- 0 "	90.0	90.0	90.0	90.0	58.8	90.0
	2 '- 6 "	90.0	90.0	90.0	90.0	47.1	90.0
	3 '- 3 "	90.0	90.0	77.4	82.3	36.2	90.0
12 '- 0 "	2 '- 0 "	90.0	90.0	90.0	90.0	56.9	90.0
	2 '- 6 "	90.0	90.0	90.0	90.0	45.5	90.0
	3 '- 3 "	90.0	90.0	74.8	79.6	35.0	89.8
12 '- 6 "	2 '- 0 "	90.0	90.0	90.0	90.0	55.0	90.0
	2 '- 6 "	90.0	90.0	90.0	90.0	44.0	90.0
	3 '- 3 "	90.0	90.0	72.3	76.9	33.8	86.8

OPTION #2 : 4 FASTENERS CONNECTION

MAXIMUM MULLION SPAN "L" (ft-in)	EFFECTIVE SPACING b = S_s/2 * "b" (ft-in)	MAXIMUM A.S.D. DESIGN PRESSURE RATING (psf): POURED CONCRETE (Min. fc = 3ksi) SUBSTRATE, FASTENER TYPES K	L	M	GROUT FILLED CONCRETE BLOCK SUBSTRATE, FASTENER TYPES N	O	1/4" Min. THK ASTM A-36 STEEL SUBSTRATE, FASTENER P
8 '- 0 "	2 '- 0 "	90.0	90.0	90.0	90.0	90.0	90.0
	2 '- 6 "	90.0	90.0	90.0	90.0	75.6	90.0
	3 '- 3 "	90.0	90.0	90.0	90.0	58.2	90.0
8 '- 6 "	2 '- 0 "	90.0	90.0	90.0	90.0	90.0	90.0
	2 '- 6 "	90.0	90.0	90.0	90.0	75.0	90.0
	3 '- 3 "	90.0	90.0	90.0	90.0	57.7	90.0
9 '- 0 "	2 '- 0 "	90.0	90.0	90.0	90.0	90.0	90.0
	2 '- 6 "	90.0	90.0	90.0	90.0	73.5	90.0
	3 '- 3 "	90.0	90.0	90.0	90.0	56.5	90.0
9 '- 6 "	2 '- 0 "	90.0	90.0	90.0	90.0	89.4	90.0
	2 '- 6 "	90.0	90.0	90.0	90.0	71.5	90.0
	3 '- 3 "	90.0	90.0	90.0	90.0	55.0	90.0
10 '- 0 "	2 '- 0 "	90.0	90.0	90.0	90.0	86.7	90.0
	2 '- 6 "	90.0	90.0	90.0	90.0	69.4	90.0
	3 '- 3 "	90.0	90.0	90.0	90.0	53.4	90.0
10 '- 6 "	2 '- 0 "	90.0	90.0	90.0	90.0	84.0	90.0
	2 '- 6 "	90.0	90.0	90.0	90.0	67.2	90.0
	3 '- 3 "	90.0	90.0	90.0	90.0	51.7	90.0
11 '- 0 "	2 '- 0 "	90.0	90.0	90.0	90.0	81.2	90.0
	2 '- 6 "	90.0	90.0	90.0	90.0	64.9	90.0
	3 '- 3 "	90.0	90.0	90.0	90.0	50.0	90.0
11 '- 6 "	2 '- 0 "	90.0	90.0	90.0	90.0	78.4	90.0
	2 '- 6 "	90.0	90.0	90.0	90.0	62.8	90.0
	3 '- 3 "	90.0	90.0	90.0	90.0	48.3	90.0
12 '- 0 "	2 '- 0 "	90.0	90.0	90.0	90.0	75.8	90.0
	2 '- 6 "	90.0	90.0	90.0	90.0	60.7	90.0
	3 '- 3 "	90.0	90.0	90.0	90.0	46.7	90.0
12 '- 6 "	2 '- 0 "	90.0	90.0	90.0	90.0	73.3	90.0
	2 '- 6 "	90.0	90.0	90.0	90.0	58.6	90.0
	3 '- 3 "	90.0	90.0	90.0	90.0	45.1	90.0

FASTENER TYPES & SUBSTRATES REQUIREMENTS:

K - 1/2"Ø HILTI KWIK BOLT TZ ANCHOR W/ 2" Min. EMBEDMENT INTO POURED CONCRETE (Min. f'c = 3 ksi) BEYOND ANY FINISH MATERIAL, W/ 4" MIN. EDGE DISTANCE.

L - 1/2"Ø HILTI KWIK BOLT 3 ANCHOR W/ 3 1/2" Min. EMBEDMENT INTO POURED CONCRETE (Min. f'c = 3 ksi) BEYOND ANY FINISH MATERIAL, W/ 4" MIN. EDGE DISTANCE.

M - 1/2"Ø HILTI HUS-H SCREW ANCHOR W/ 3" Min. EMBEDMENT INTO POURED CONCRETE (Min. f'c = 3 ksi) BEYOND ANY FINISH MATERIAL, W/ 4" MIN. EDGE DISTANCE.

N - 1/2"Ø HILTI KWIK BOLT 3 ANCHOR W/ 3 1/2" Min. EMBEDMENT INTO GROUT FILLED CONCRETE BLOCK BEYOND ANY FINISH MATERIAL, W/ 4" MIN. EDGE DISTANCE.

O - 1/2"Ø HILTI HUS-H SCREW ANCHOR W/ 3" Min. EMBEDMENT INTO GROUT FILLED CONCRETE BLOCK BEYOND ANY FINISH MATERIAL, W/ 3 3/4" MIN. EDGE DISTANCE.

P - 1/2"Ø-13 TYPE "F" GRADE 5 BOLT TO 1/4" MIN. THK. ASTM A-36 STEEL W/ 1" MIN. EDGE DISTANCE OR 1/2"Ø -13 SAE GALVANIZED STEEL GRADE 5 HHB THRU BOLT W/ NUT & LOCK WASHER TO 1/4" MIN. THK. ASTM A-36 STEEL W/ 1" MIN. EDGE DISTANCE.

* SEE SHEET 10 FOR EFFECTIVE SPACING DEFINITION AT ISOMETRIC

FLORIDA BUILDING CODE (High Velocity Hurricane Zone)

M.C.V./A.G. DRAWN BY
11/18/11 DATE
11-125 DRAWING No
SHEET 15 OF 33

HR-251 SSG CAPTURED CURTAIN WALL SYSTEM LARGE & SMALL MISSILE WITH INSULATING LAMINATED GLASS

Oldcastle BuildingEnvelope™
803 Airport Rd - Terrell, TX 75160
www.OldcastleBE.com - Phone 800-869-4567

REV. No	DESCRIPTION	DATE
1	OLD 10-014	11/18/11
-	SCHEMES RED	02/10/12

REV. No	DESCRIPTION	DATE
-	-	-
-	-	-

©2010 TILTECO, INC

TILTECO INC.
TILLIT TESTING & ENGINEERING COMPANY
6355 N.W. 36th. St., Ste. 305, VIRGINIA GARDENS, FL 33166
Phone : (305)871-1530 . Fax : (305)871-1531
e-mail: tilteco@aol.com
EB-0006719
WALTER A. TILLIT Jr. P.E.
FLORIDA Lic. # 44167

WALTER A. TILLIT JR. LICENSE No. 44167 STATE OF FLORIDA PROFESSIONAL ENGINEER
11/28/11

P.E. SEAL/SIGNATURE/DATE

PRODUCT REVISED
as complying with the Florida Building Code
Acceptance No 11-1206.04
Expiration Date FEB 17, 2016
By Miami-Dade Product Control

MIAMI-DADE COUNTY

HEAD CONNECTION DETAILS (SIDE VIEWS)

SINGLE SPAN

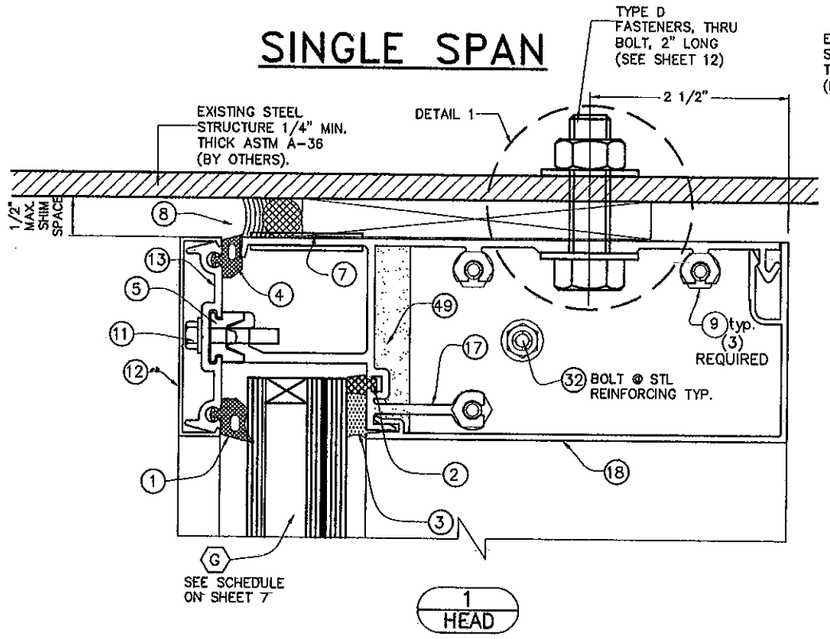

1
HEAD

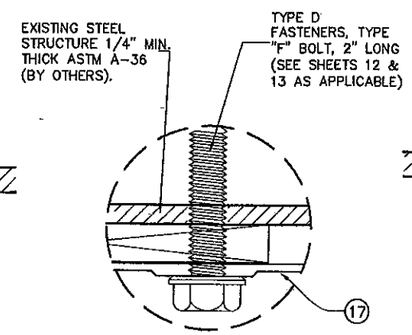

ALTERNATE FASTENER DETAIL 1

TWIN SPAN

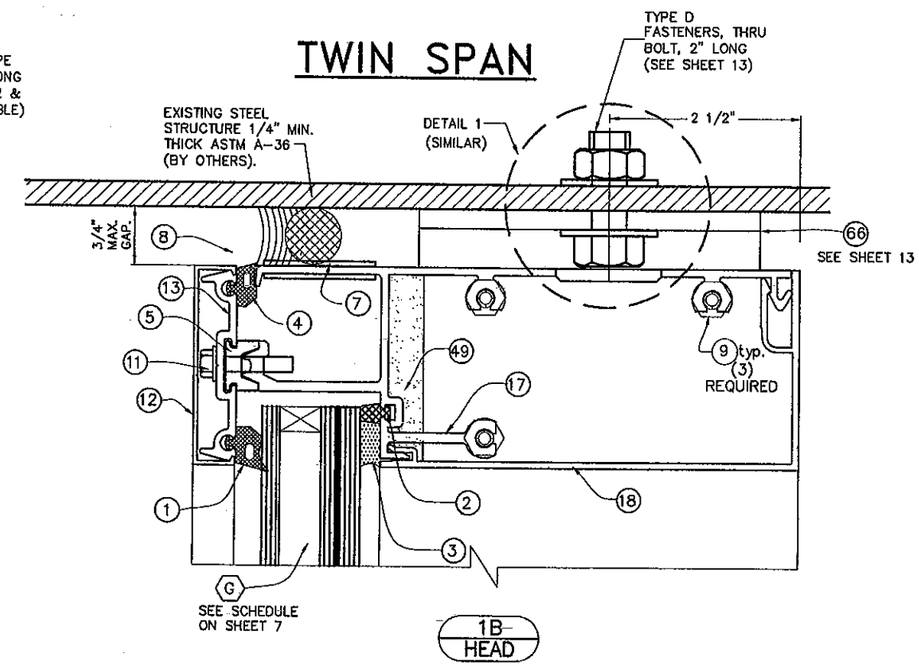

1B
HEAD

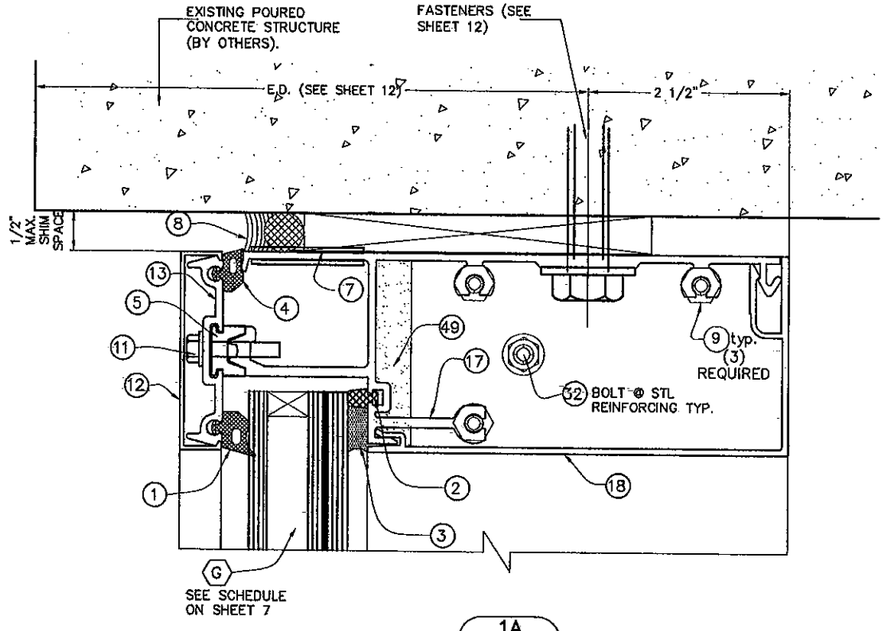

1A
HEAD

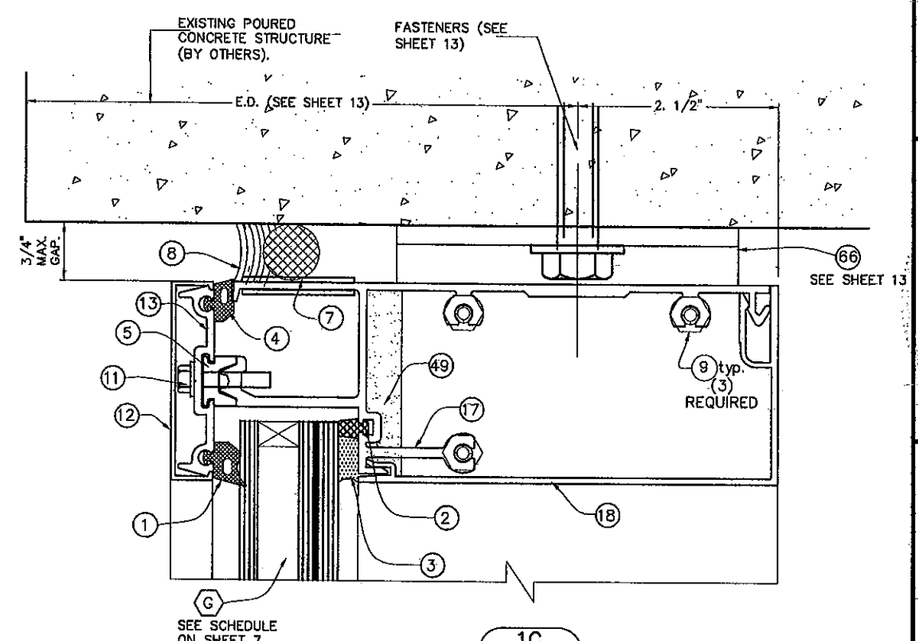

1C
HEAD

NOTE: SEE ALSO DETAILS 1, 2 & 3, & 18 ON SHEETS 22 & 25 RESPECTIVELY

FLORIDA BUILDING CODE (High Velocity Hurricane Zone)

HR-251 SSG CAPTURED CURTAIN WALL SYSTEM LARGE & SMALL MISSILE WITH INSULATING LAMINATED GLASS

M.C.V./A.G. DRAWN BY

11/18/11 DATE

11-125 DRAWING No

SHEET 16 OF 33

Oldcastle BuildingEnvelope™
803 Airport Rd - Terrell, TX 75160
www.OldcastleBE.com - Phone 800-869-4567

REV. No	DESCRIPTION	DATE	REV. No	DESCRIPTION	DATE
1	OLD 10-014	11/18/11	-	-	-
-			-	-	-

©2010 TILTECO, INC

TILTECO INC.
TILLIT TESTING & ENGINEERING COMPANY
6355 N.W. 36th. St. Ste. 305, VIRGINIA GARDENS, FL 33166
Phone : (305)871-1530 , Fax : (305)871-1531
e-mail: tilteco@aol.com
EB-0006719
WALTER A. TILLIT Jr. P.E.
FLORIDA Lic. # 44167

WALTER A. TILLIT JR. LICENSE No. 44167 STATE OF FLORIDA PROFESSIONAL ENGINEER

11/18/11

P.E. SEAL/SIGNATURE/DATE

PRODUCT REVISED
as complying with the Florida Building Code
Acceptance No 11-1206.09
Expiration Date FEB 17 2016
By
Miami-Dade Product Control

MIAMI-DADE COUNTY

HORIZONTAL CONNECTION DETAILS (SIDE VIEWS)

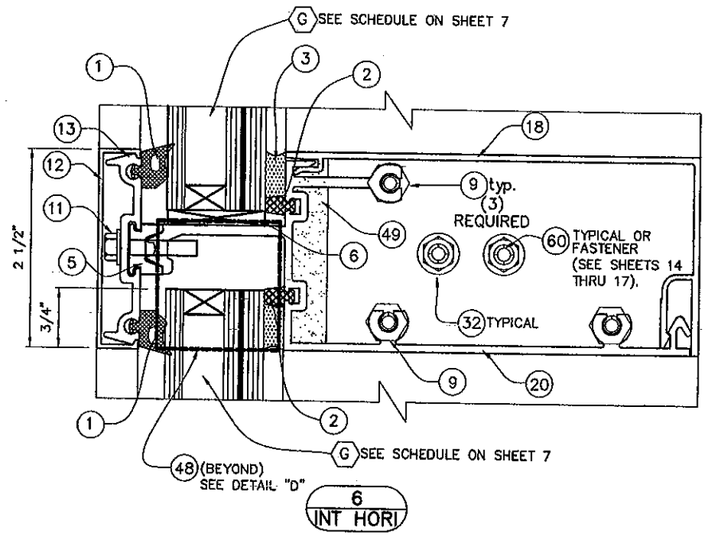

AT SINGLE OR TWIN SPAN

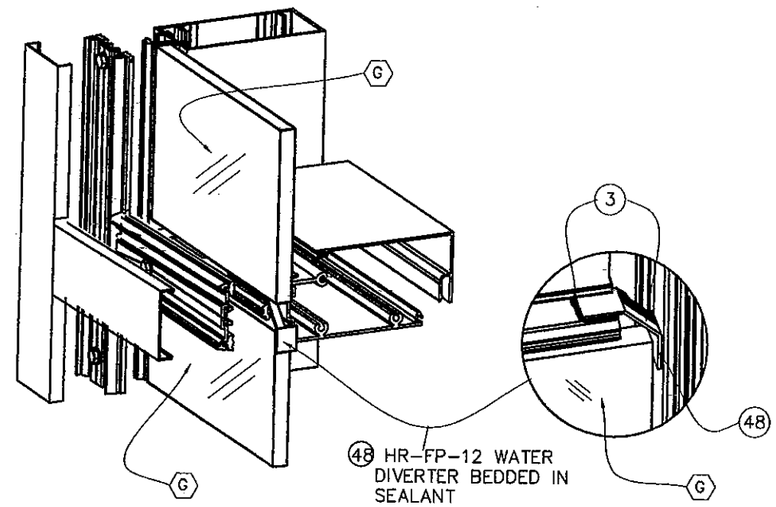

DETAIL "D"

SILL CONNECTION DETAILS (SIDE VIEWS)

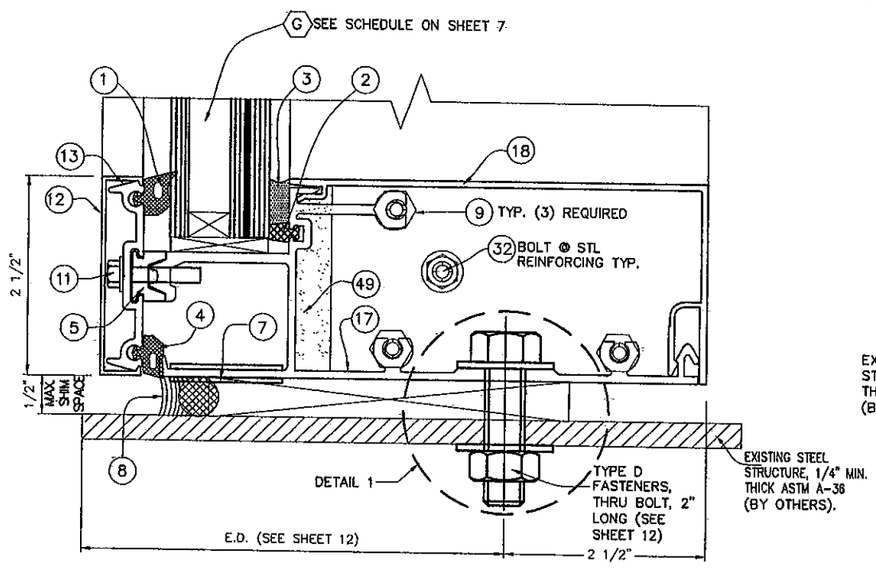

CONNECTION TO STEEL STRUCTURE

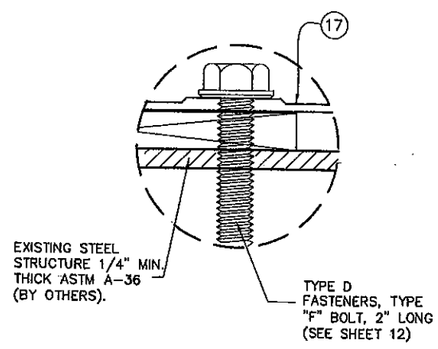

ALTERNATE FASTENER DETAIL 1

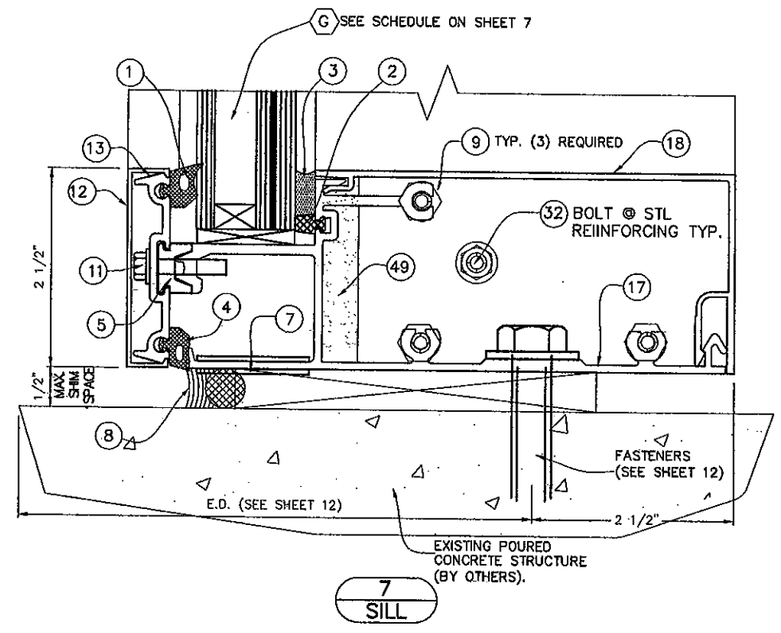

CONNECTION TO POURED CONCRETE STRUCTURE

FLORIDA BUILDING CODE (High Velocity Hurricane Zone)

M.C.V./A.G. DRAWN BY

11/18/11 DATE

11-125 DRAWING No

SHEET 17 OF 33

HR-251 SSG CAPTURED CURTAIN WALL SYSTEM LARGE & SMALL MISSILE WITH INSULATING LAMINATED GLASS

Oldcastle BuildingEnvelope™
803 Airport Rd - Terrell, TX 75160
www.OldcastleBE.com - Phone 800-869-4567

REV. No	DESCRIPTION	DATE	REV. No	DESCRIPTION	DATE
1	OLD 10-014	11/18/11	-	-	-
-			-	-	-

©2010 TILTECO, INC

TILTECO INC.
TILLIT TESTING & ENGINEERING COMPANY
6355 N.W. 36th. St., Ste. 305, VIRGINIA GARDENS, FL 33166
Phone : (305)871-1530 . Fax : (305)871-1531
e-mail: tilteco@aol.com
EB-0006719
WALTER A. TILLIT Jr. P.E.
FLORIDA Lic. # 44167

WALTER A. TILLIT JR. LICENSE No. 44167 STATE OF FLORIDA PROFESSIONAL ENGINEER

P.E. SEAL/SIGNATURE/DATE

PRODUCT REVISED
as complying with the Florida Building Code
Acceptance No. 11-1206.09
Expiration Date FEB. 17, 2016
By Miami Dade Product Control

MIAMI-DADE COUNTY

HORIZONTAL SECTION @ SSG MULLION DETAILS (PLAN)

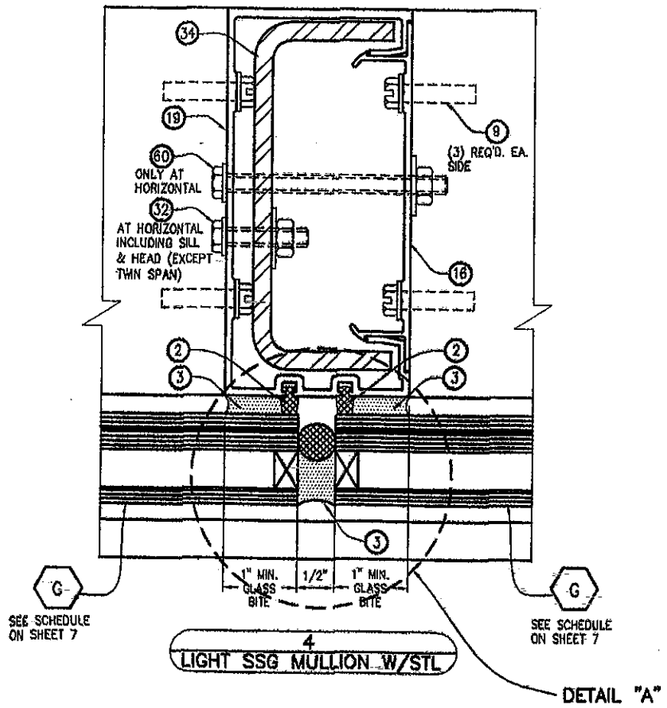

4
LIGHT SSG MULLION W/STL

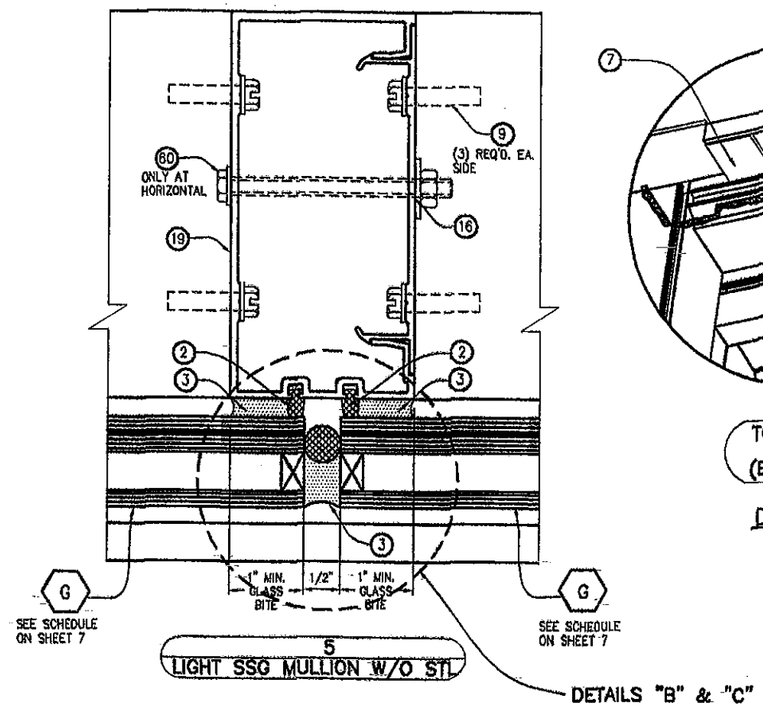

5
LIGHT SSG MULLION W/O STL

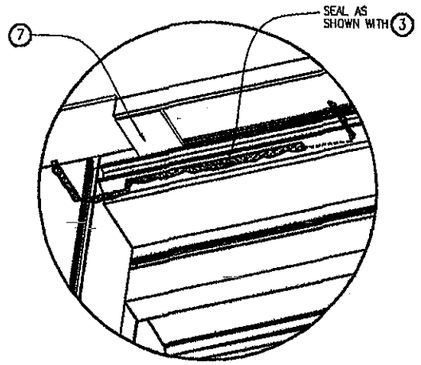

TOP MULLION END CAP (BOTTOM SIM.)

DETAIL "C"

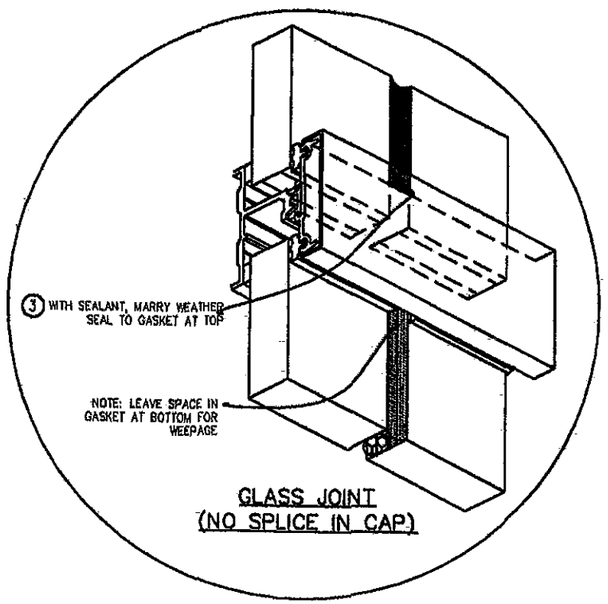

GLASS JOINT
(NO SPLICE IN CAP)

DETAIL "A"

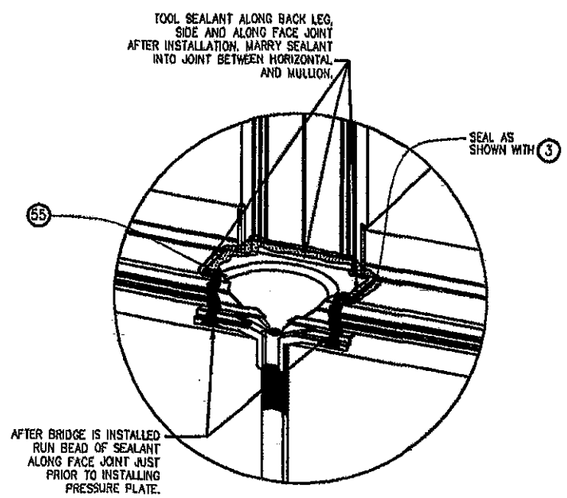

SSG BRIDGE INSTALLATION AT HORIZONTAL/VERTICAL INTERSECTION

DETAIL "B"

FLORIDA BUILDING CODE (High Velocity Hurricane Zone)

HR-251 SSG CAPTURED CURTAIN WALL SYSTEM LARGE & SMALL MISSILE WITH INSULATING LAMINATED GLASS

M.C.Y./A.G. DRAWN BY

11/18/11 DATE

11-125 DRAWING No

SHEET 18 OF 33

Oldcastle BuildingEnvelope™
803 Airport Rd - Terrell, TX 75160
www.OldcastleBE.com - Phone 800-869-4567

REV. No.	DESCRIPTION	DATE	REV. No.	DESCRIPTION	DATE
1	BID TO-0-18	10/19/11	-	-	-
			-	-	-

©2010 TILTECO, INC

TILTECO INC.
TILLIT TESTING & ENGINEERING COMPANY
6355 N.W. 36th. St., Ste. 305, VIRGINIA GARDENS, FL 33166
Phone : (305)871-1530 , Fax : (305)871-1531
e-mail: tilteco@aol.com
EB-0006719
WALTER A. TILLIT Jr. P.E.
FLORIDA Lic. # 44167

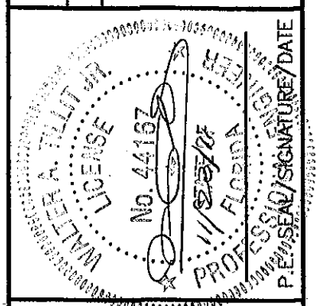

P.E. SEAL/SIGNATURE/DATE

PRODUCT REVISED
as complying with the Florida Building Code
Acceptance No 11-1206.09
Expiration Date Feb. 17, 2016
By Miami-Dade Product Control

MIAMI-DADE COUNTY

* NOTE: INDICATED MAXIMUM AND MINIMUM VALUES FOR SPECIFIED SEALANT VERTICAL JOINT WIDTH AT JAMBS CONNECTED TO WALL HAVE BEEN DETERMINED ONLY TAKING INTO CONSIDERATION THE ACTUAL MOVEMENT OF GLASS WALL AT JAMBS DUE TO THERMAL, WIND AND ITS OWN CONSTRUCTION TOLERANCE, AND NOT PERFORMANCE FACTORS FROM THE SURROUNDING STRUCTURE.

JAMB CONNECTIONS AT HORIZONTALS (PLAN)

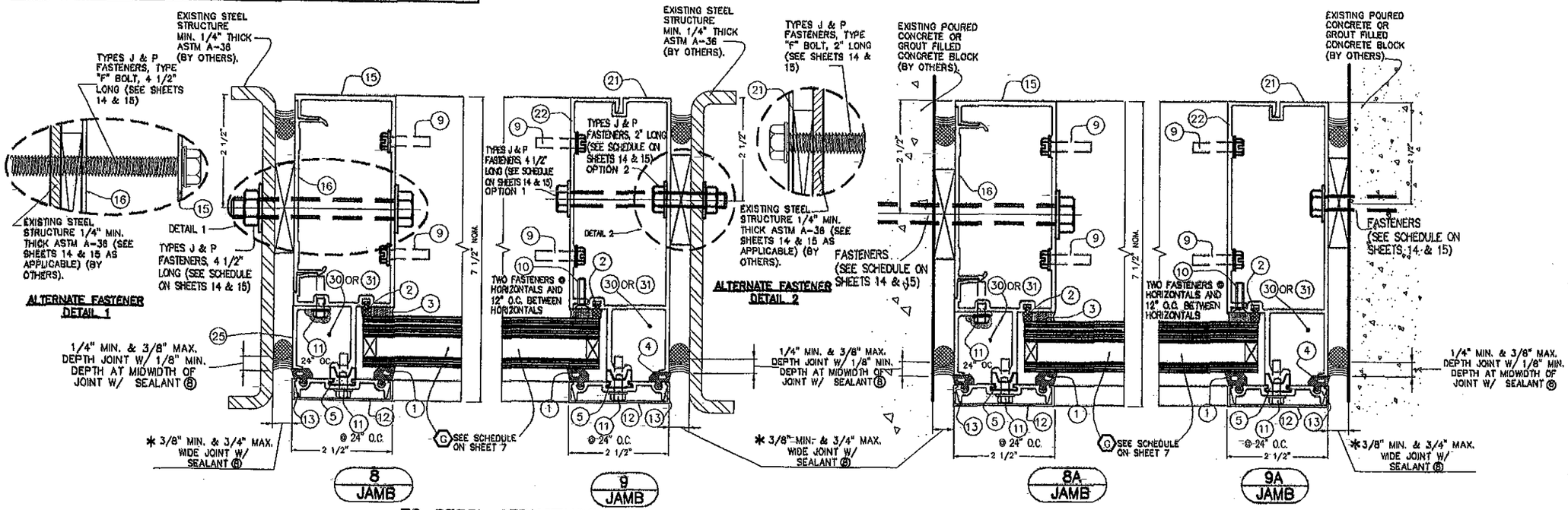

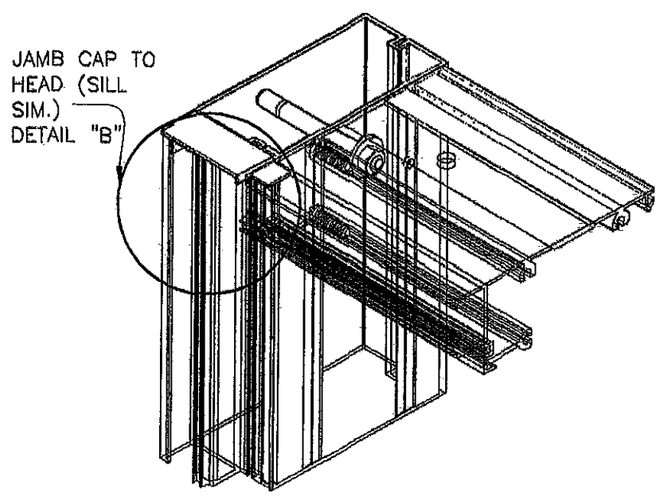

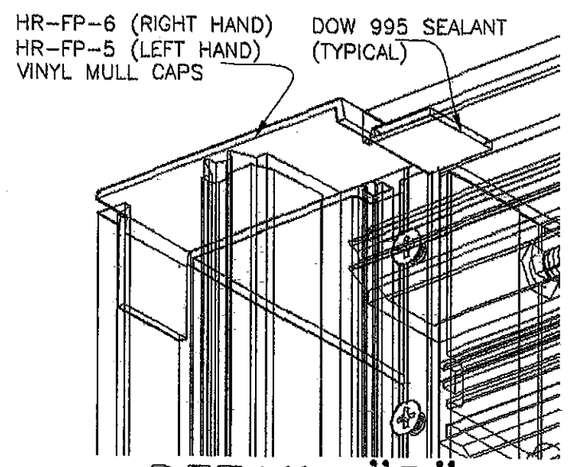

DETAIL "B"

LOOKING FOR BELOW

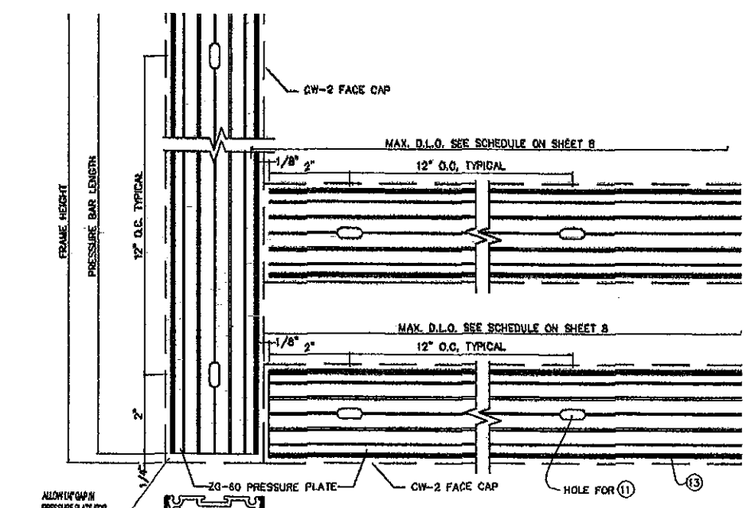

TYPICAL PRESSURE PLATE FABRICATION ⑬ @ END ONLY.

FLORIDA BUILDING CODE (High Velocity Hurricane Zone)

HR-251 SSG CAPTURED CURTAIN WALL SYSTEM LARGE & SMALL MISSILE WITH INSULATING LAMINATED GLASS

Oldcastle BuildingEnvelope™
8103 Airport Rd - Terrell, TX 75160
www.OldcastleBE.com - Phone 800-869-4567

REV. No.	DESCRIPTION	DATE	REV. No.	DESCRIPTION	DATE
1	C.O. 10-014	11/16/11	-	-	-

M.C.V./A.G. DRAWN BY
11/18/11 DATE
11-125 DRAWING No
SHEET 19 OF 33

©2010 TILTECO, INC

TILTECO INC.
TILLIT TESTING & ENGINEERING COMPANY
8355 N.W. 36th, Ste. 355, VIRGINIA GARDENS, FL 33166
Phone : (305)871-1531 Fax : (305)871-1531
e-mail: tilteco@aol.com
EB-0006719
WALTER A. TILLIT Jr. P.E.
FLORIDA Lic. # 44167

WALTER A. TILLIT JR. LICENSE No. 44167 STATE OF FLORIDA PROFESSIONAL ENGINEER
1/12/2011
P.E. SEAL/SIGNATURE/DATE

PRODUCT REVISED as complying with the Florida Building Code
Acceptance No. 11-1206.09
Expiration Date FEB 17 2016
By Miami-Dade Product Control

MIAMI-DADE COUNTY

CORNER MULLION DETAILS (PLAN)

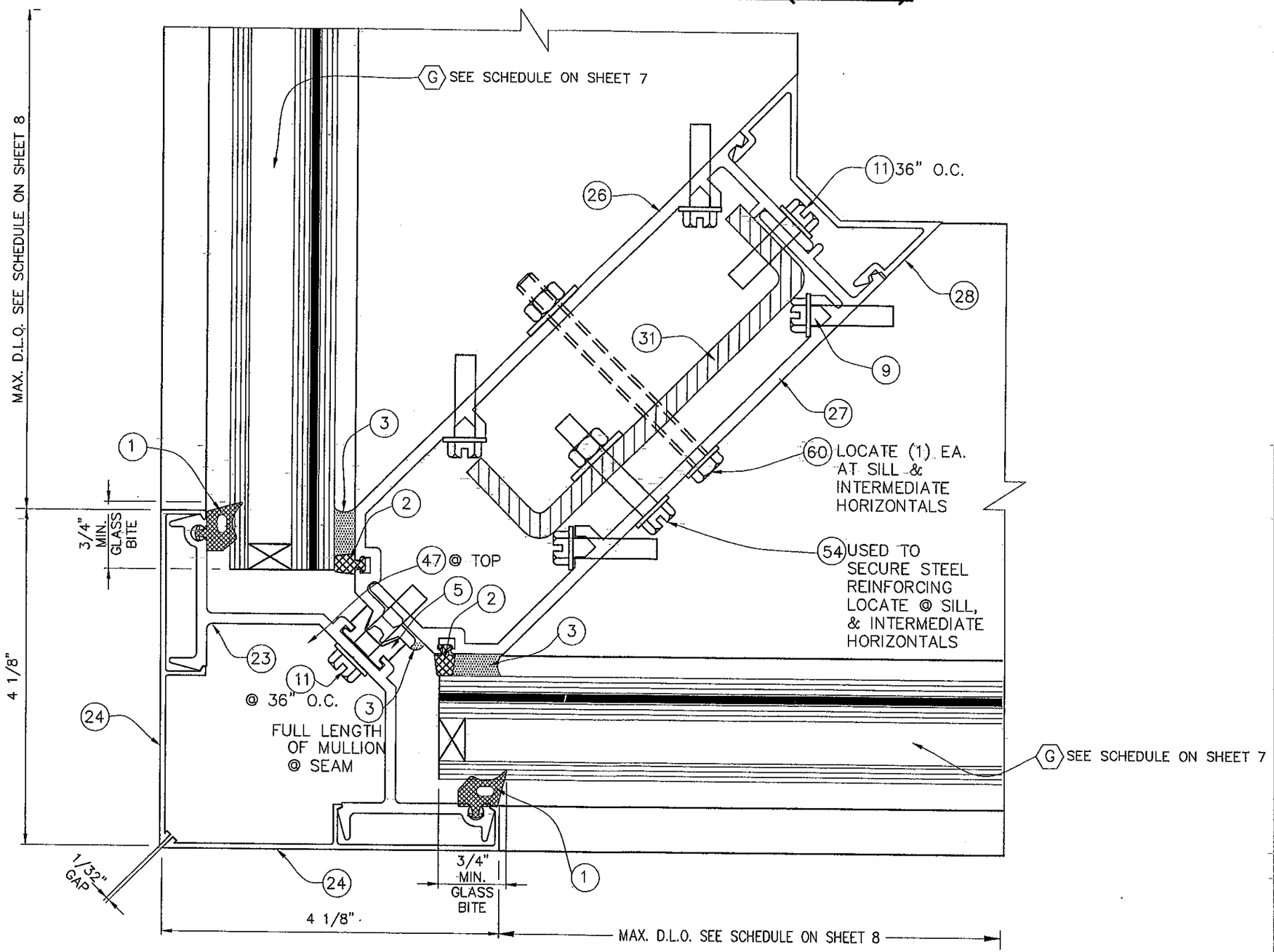

14
90 DEG CORNER CAPTURED PLAN

FLORIDA BUILDING CODE (High Velocity Hurricane Zone)

©2010 TILTECO, INC

TILTECO INC.
TILLIT TESTING & ENGINEERING COMPANY
6355 N.W. 36th. St., Ste. 305, VIRGINIA GARDENS, FL 33166
Phone : (305)871-1530 , Fax : (305)871-1531
e-mail: tilteco@aol.com
EB-0006719
WALTER A. TILLIT Jr. P.E.
FLORIDA Lic. # 44167

HR-251 SSG CAPTURED CURTAIN WALL SYSTEM LARGE & SMALL MISSILE WITH INSULATING LAMINATED GLASS

Oldcastle BuildingEnvelope™
803 Airport Rd - Terrell, TX 75160
www.OldcastleBE.com - Phone 800-869-4567

REV. No	DESCRIPTION	DATE	REV. No	DESCRIPTION	DATE
1	OLD 10-014	11/18/11	-	-	-
-			-	-	-

M.C.V./A.G. DRAWN BY

11/18/11 DATE

11-125 DRAWING No

SHEET 20 OF 33

WALTER A. TILLIT JR. LICENSE No 44167 STATE OF FLORIDA PROFESSIONAL ENGINEER

P.E. SEAL/SIGNATURE/DATE

PRODUCT REVISED
as complying with the Florida Building Code
Acceptance No 11-1206.09
Expiration Date FEB 17, 2016
By Miami-Dade Product Control

MIAMI-DADE COUNTY

JAMBS CONNECTIONS AT INSIDE CORNER (PLAN)

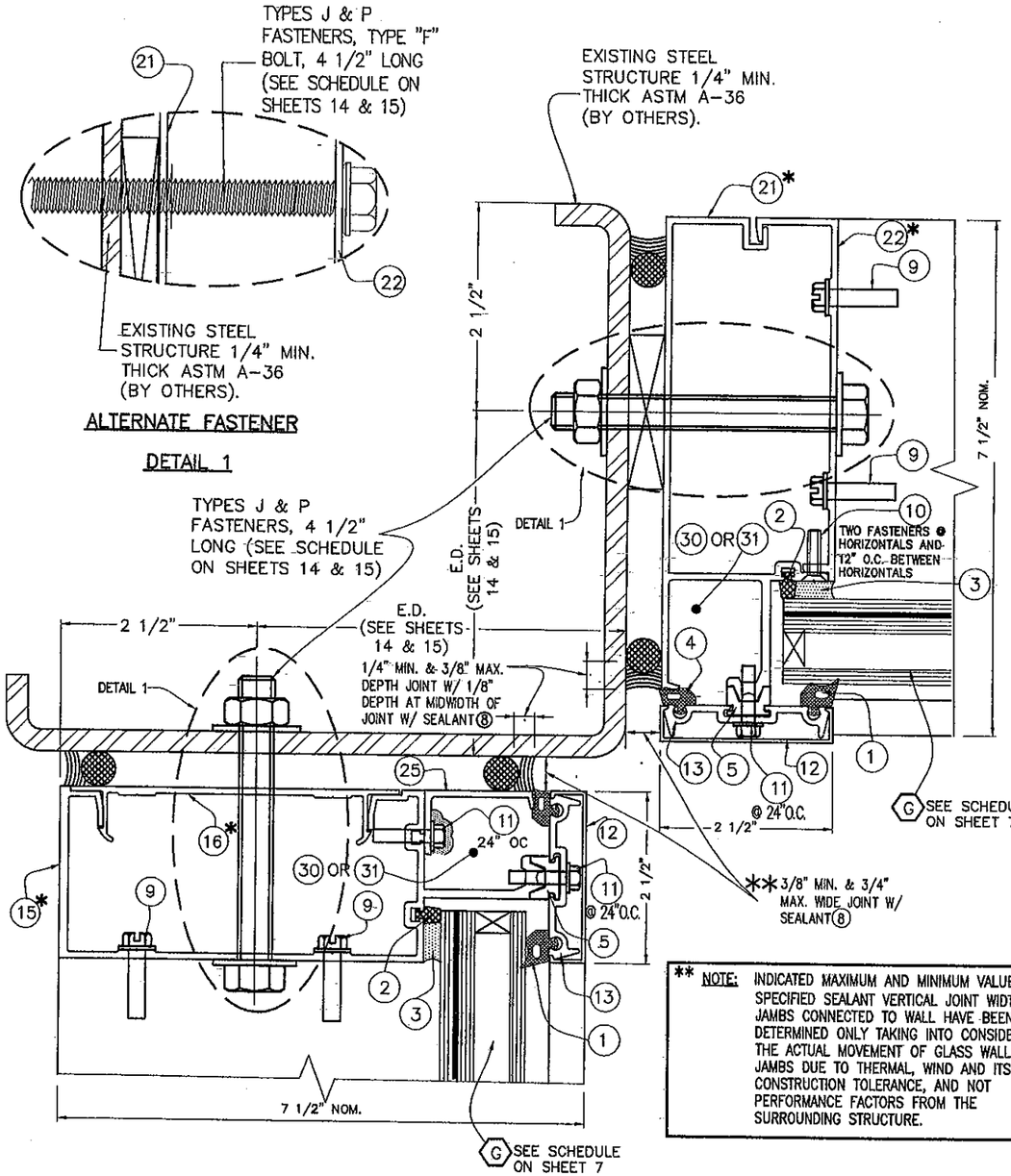

8, 9 @ INSIDE CORNER
JAMB TO EXISTING STEEL (PLAN)

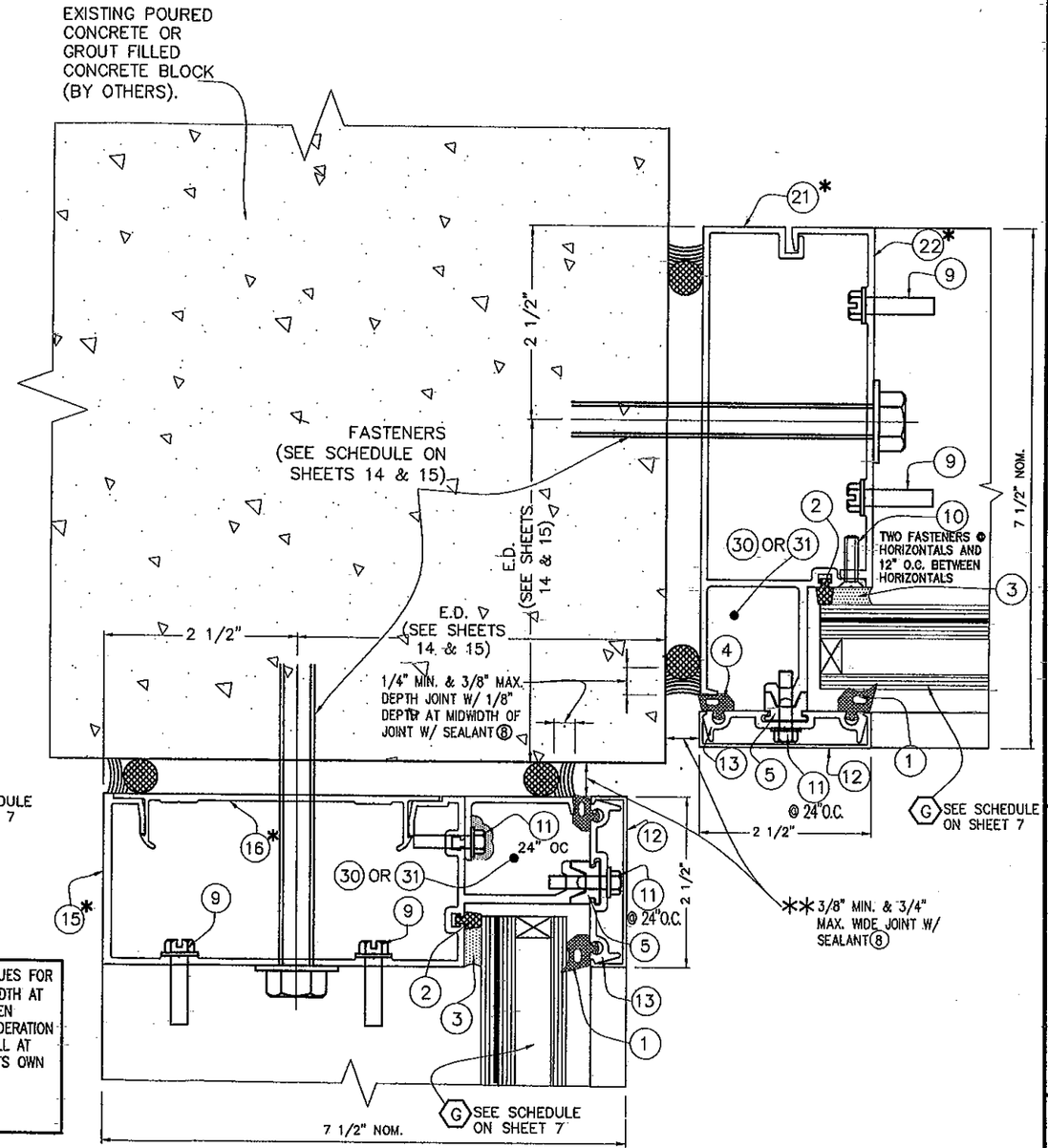

8A, 9A @ INSIDE CORNER
JAMB TO POURED CONCRETE (PLAN)

** NOTE: INDICATED MAXIMUM AND MINIMUM VALUES FOR SPECIFIED SEALANT VERTICAL JOINT WIDTH AT JAMBS CONNECTED TO WALL HAVE BEEN DETERMINED ONLY TAKING INTO CONSIDERATION THE ACTUAL MOVEMENT OF GLASS WALL AT JAMBS DUE TO THERMAL, WIND AND ITS OWN CONSTRUCTION TOLERANCE, AND NOT PERFORMANCE FACTORS FROM THE SURROUNDING STRUCTURE.

* JAMBS MAY BE (15) + (16) OR (21) + (22) INTERCHANGEABLE

FLORIDA BUILDING CODE (High Velocity Hurricane Zone)

M.C.V./A.G. DRAWN BY
11/18/11 DATE
11-125 DRAWING No
SHEET 21 OF 33

HR-251 SSG CAPTURED CURTAIN WALL SYSTEM LARGE & SMALL MISSILE WITH INSULATING LAMINATED GLASS

Oldcastle BuildingEnvelope™
803 Airport Rd - Terrell, TX 75160
www.OldcastleBE.com - Phone 800-869-4567

REV. No	DESCRIPTION	DATE	REV. No	DESCRIPTION	DATE
1	QD 10-014	11/18/11	-	-	-
-			-	-	-

©2010 TILTECO, INC

TILTECO INC.
TILLIT TESTING & ENGINEERING COMPANY
6355 N.W. 36th. St., Ste. 305, VIRGINIA GARDENS, FL 33166
Phone : (305)871-1530 . Fax : (305)871-1531
e-mail: tilteco@aol.com
EB-0006719
WALTER A. TILLIT Jr. P.E.
FLORIDA Lic. # 44167

WALTER A. TILLIT JR. LICENSE No. 44167 STATE OF FLORIDA PROFESSIONAL ENGINEER
11/18/2011

P.E. SEAL/SIGNATURE/DATE

PRODUCT REVISED as complying with the Florida Building Code
Acceptance No 11-1206.09
Expiration Date FEB 11 2016
By Miami Dade Product Control

MIAMI-DADE COUNTY

SILL & HEAD CONNECTION DETAILS FOR SINGLE SPAN & SILL CONNECTION DETAIL FOR TWIN SPAN (PLANS)

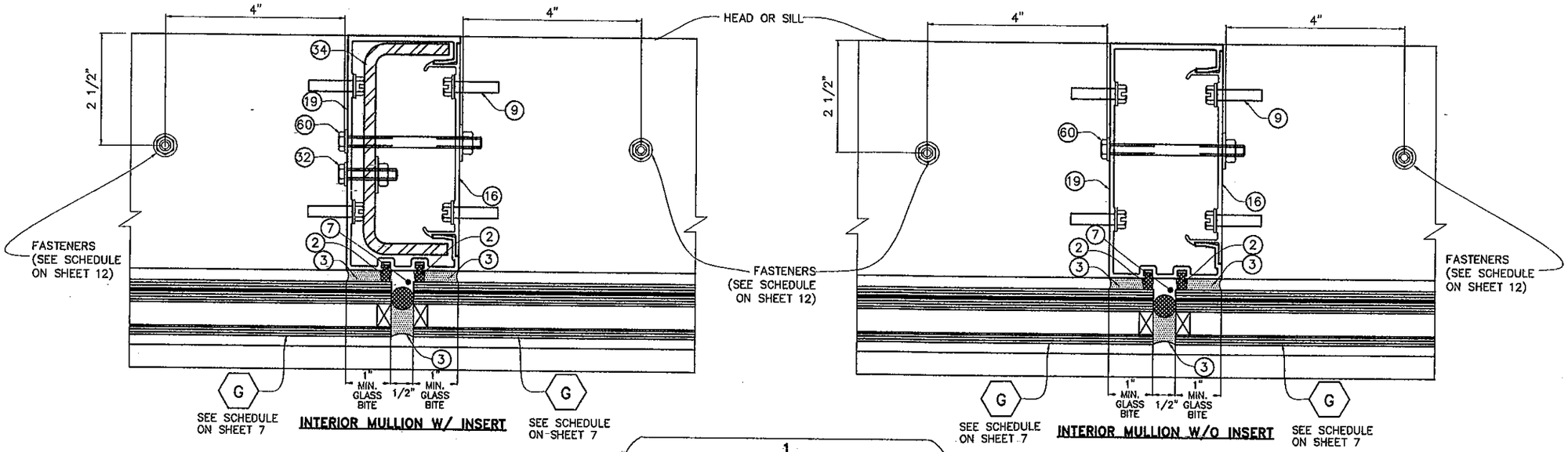

1

CONNECTION AT INTERIOR MULLION

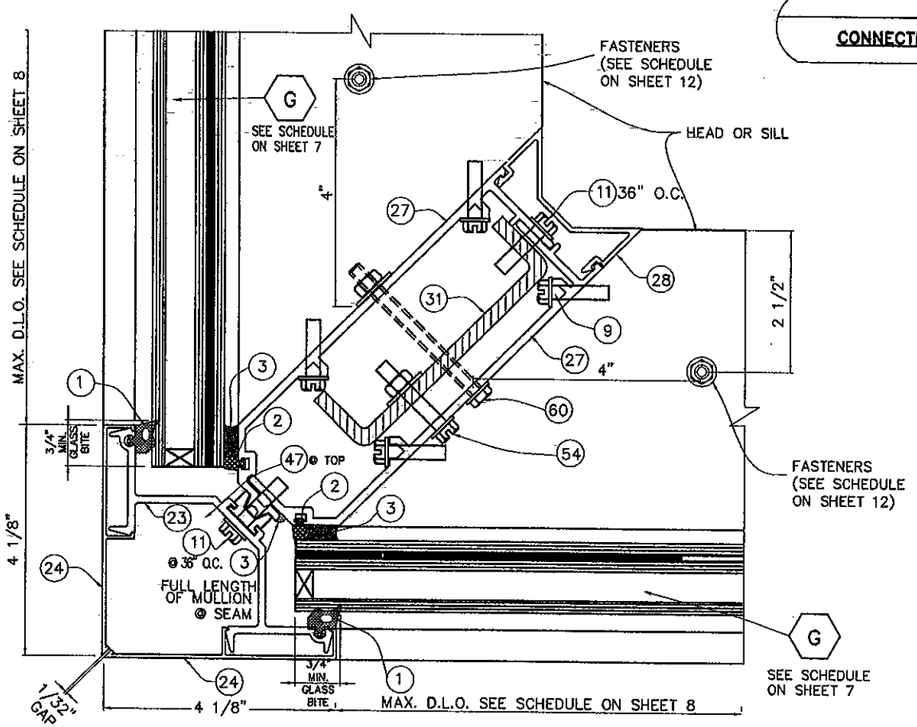

2

CONNECTION AT CORNER MULLION

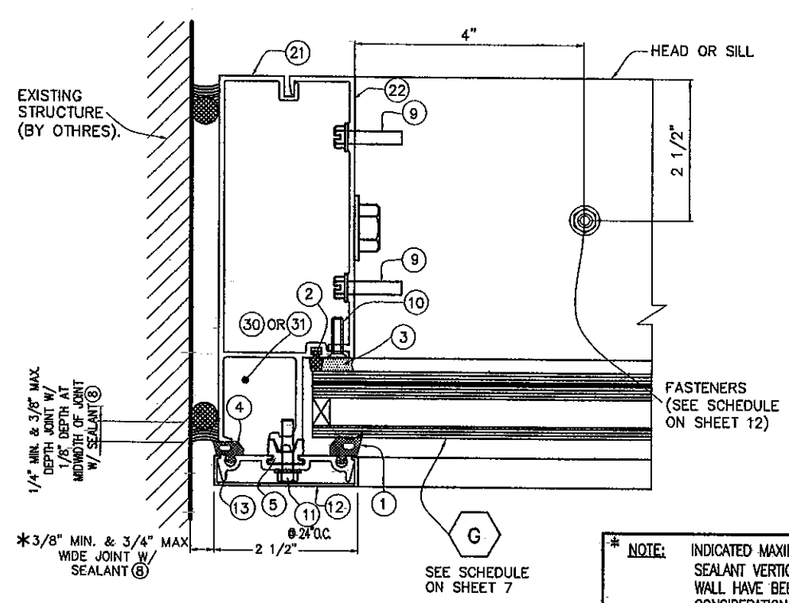

3

CONNECTION AT JAMBS

* NOTE: INDICATED MAXIMUM AND MINIMUM VALUES FOR SPECIFIED SEALANT VERTICAL JOINT WIDTH AT JAMBS CONNECTED TO WALL HAVE BEEN DETERMINED ONLY TAKING IN CONSIDERATION THE ACTUAL MOVEMENT OF GLASS WALL AT JAMBS DUE TO THERMAL, WIND AND ITS OWN CONSTRUCTION TOLERANCE, AND NOT PERFORMANCE FACTORS FROM THE SURROUNDING STRUCTURE.

FLORIDA BUILDING CODE (High Velocity Hurricane Zone)

HR-251 SSG CAPTURED CURTAIN WALL SYSTEM LARGE & SMALL MISSILE WITH INSULATING LAMINATED GLASS

M.C.V./A.G. DRAWN BY

11/18/11 DATE

11-125 DRAWING No

SHEET 22 OF 33

Oldcastle BuildingEnvelope™
803 Airport Rd - Terrell, TX 75160
www.OldcastleBE.com - Phone 800-869-4567

REV. No	DESCRIPTION	DATE	REV. No	DESCRIPTION	DATE
1	OLD 10-014	11/18/11	-	-	-
			-	-	-

©2010 TILTECO, INC

TILTECO INC.
TILLIT TESTING & ENGINEERING COMPANY
6355 N.W. 36th. St. Ste. 305, VIRGINIA GARDENS, FL 33166
Phone : (305)871-1530 , Fax : (305)871-1531
e-mail: tilteco@aol.com
EB-0006719
WALTER A. TILLIT Jr. P.E.
FLORIDA Lic. # 44167

WALTER A. TILLIT JR. LICENSE No. 44167 STATE OF FLORIDA PROFESSIONAL ENGINEER

P.E. SEAL/SIGNATURE/DATE

PRODUCT REVISED
as complying with the Florida Building Code
Acceptance No 11-1204.09
Expiration Date Feb 11 2016
By Miami-Dade Product Control

MIAMI-DADE COUNTY

OPTION #1 FOR HEAD CONNECTION OF TWIN SPAN SSG MULLIONS

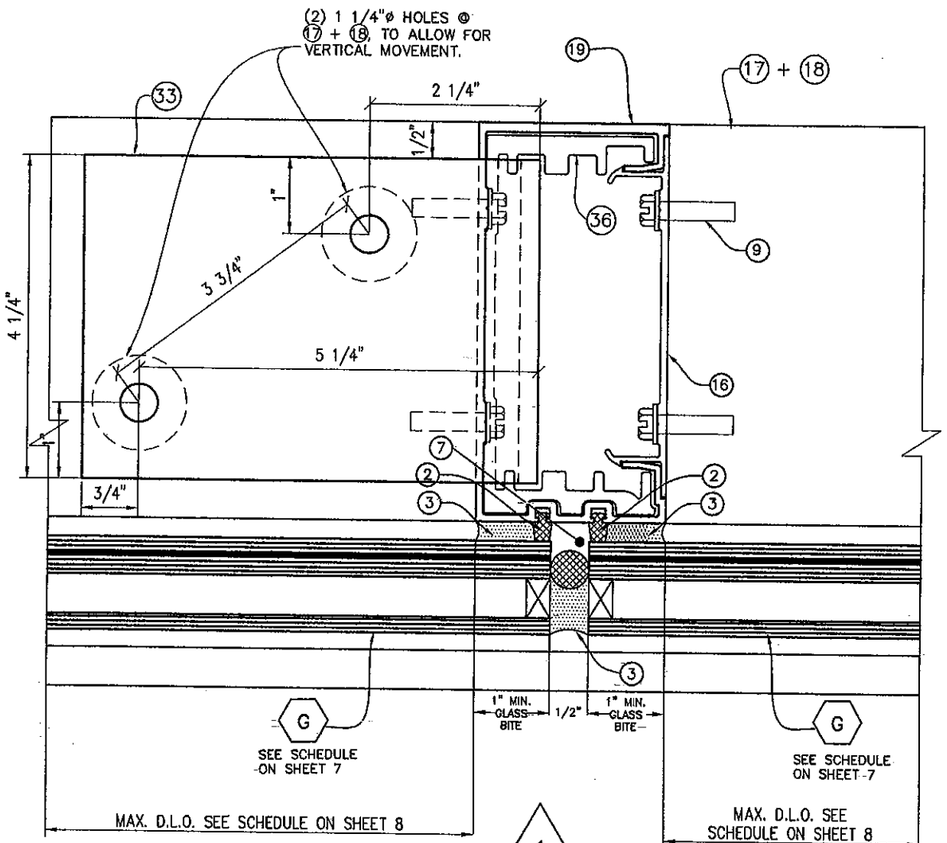

1

17
HEAD ANCHOR (PLAN)

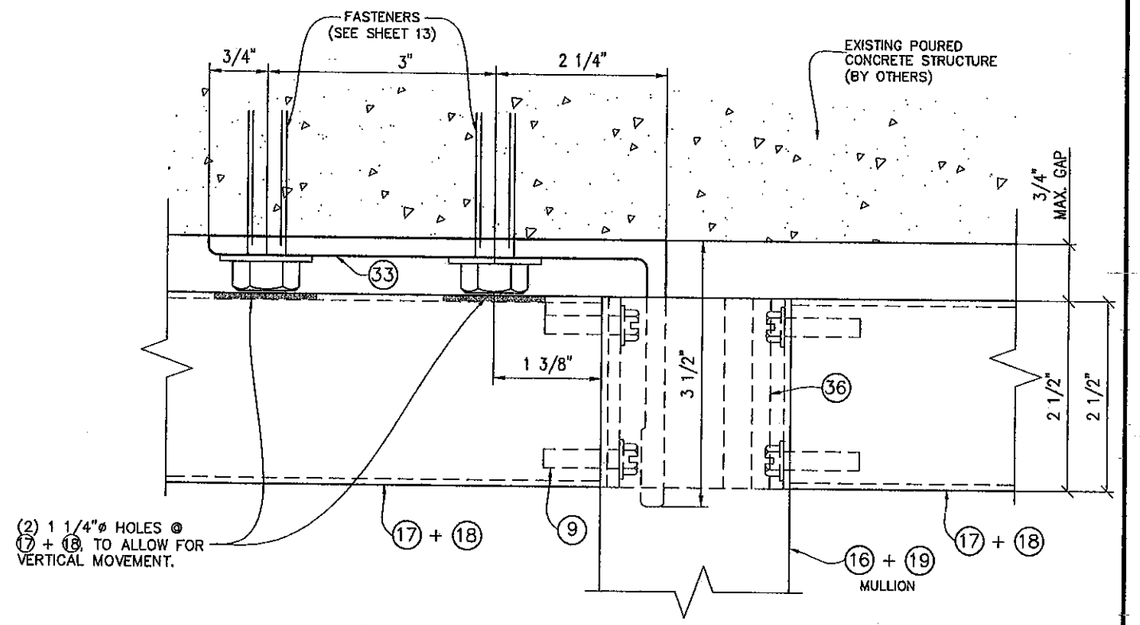

TO EXISTING POURED CONCRETE STRUCTURE

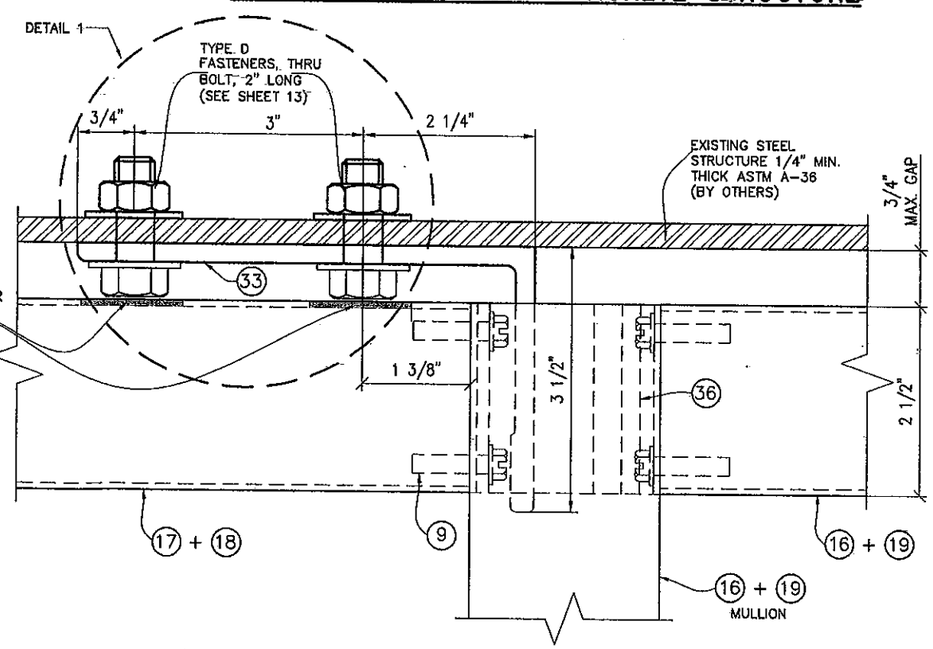

TO EXISTING STEEL STRUCTURE

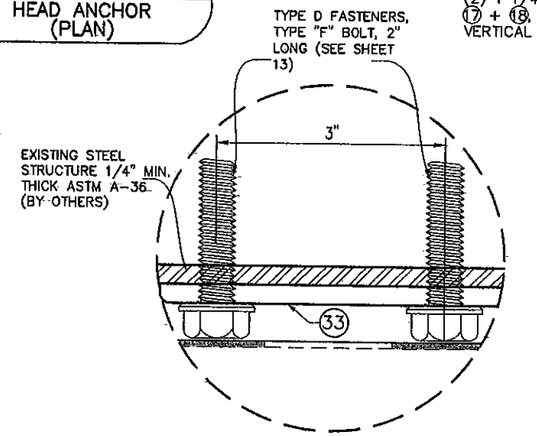

ALTERNATE FASTENER
DETAIL 1

EXTERIOR ELEVATIONS

1

FLORIDA BUILDING CODE (High Velocity Hurricane Zone)

©2010 TILTECO, INC

TILTECO INC.
TILLIT TESTING & ENGINEERING COMPANY
6355 N.W. 36th St. Ste. 305, VIRGINIA GARDENS, FL 33166
Phone : (305)871-1530 . Fax : (305)871-1531
e-mail: tilteco@aol.com
EB-0006719
WALTER A. TILLIT Jr. P.E.
FLORIDA Lic. # 44167

M.C.V./A.G.
DRAWN BY

11/18/11
DATE

11-125
DRAWING No

SHEET 23 OF 33

HR-251 SSG CAPTURED CURTAIN WALL SYSTEM LARGE & SMALL MISSILE WITH INSULATING LAMINATED GLASS

Oldcastle BuildingEnvelope™
803 Airport Rd - Terrell, TX 75160
www.OldcastleBE.com - Phone 800-869-4567

REV. No	DESCRIPTION	DATE
1	OLD 10-014	11/18/11

REV. No	DESCRIPTION	DATE
-	-	-
-	-	-

WALTER A. TILLIT JR. LICENSE No. 44167 STATE OF FLORIDA PROFESSIONAL ENGINEER

P.E. SEAL/SIGNATURE/DATE

PRODUCT REVISED
as complying with the Florida Building Code
Acceptance No 11-1206.09
Expiration Date FEB 14 2016
By Miami-Dade Product Control

MIAMI-DADE COUNTY

OPTION #2 FOR HEAD CONNECTION OF TWIN SPAN SSG MULLIONS

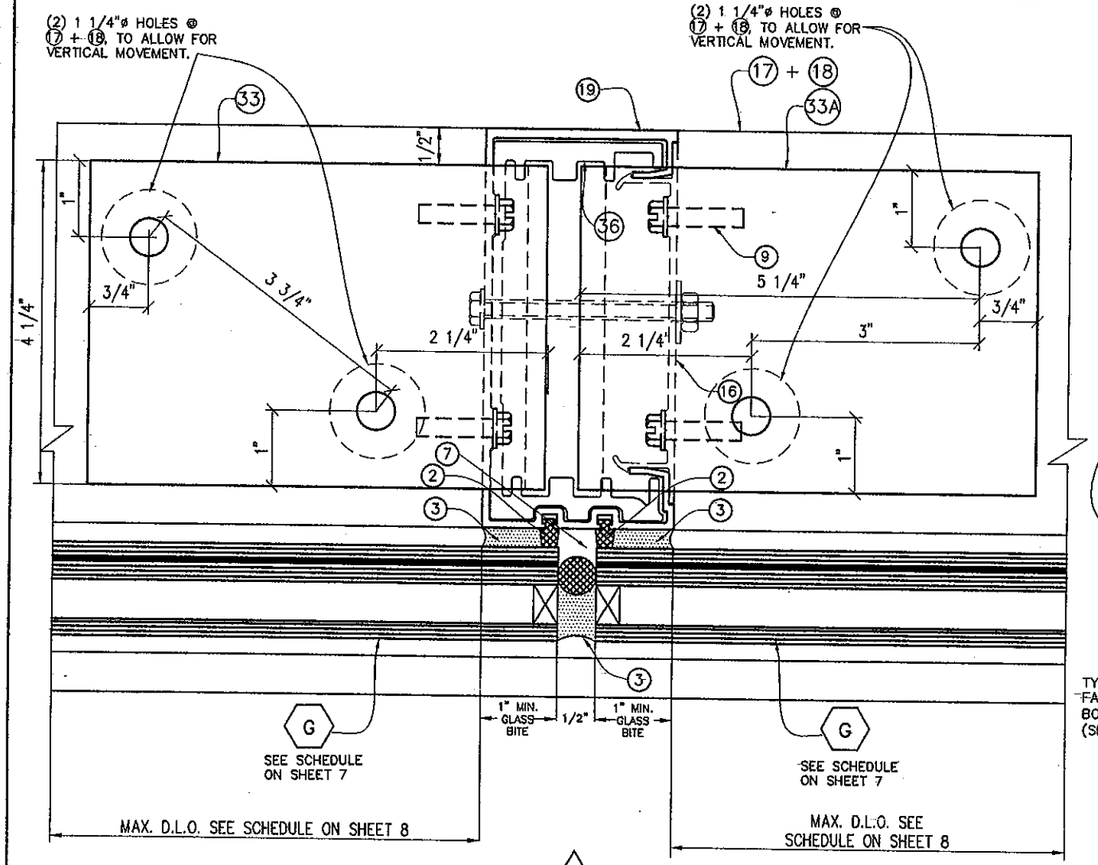

1

17A
HEAD ANCHOR (PLAN)

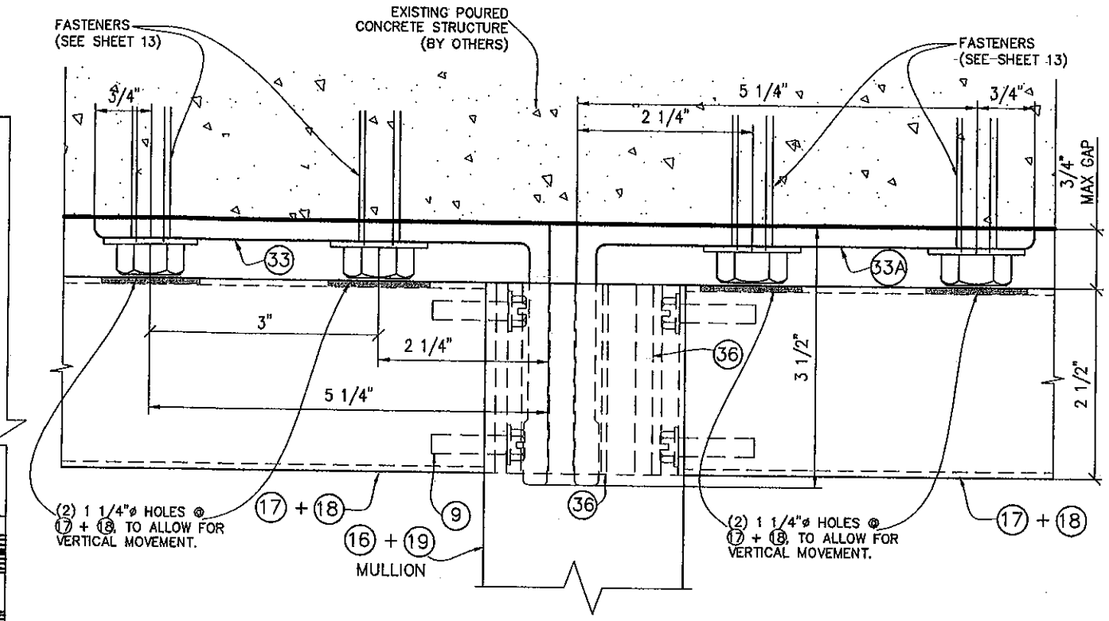

TO EXISTING POURED CONCRETE STRUCTURE

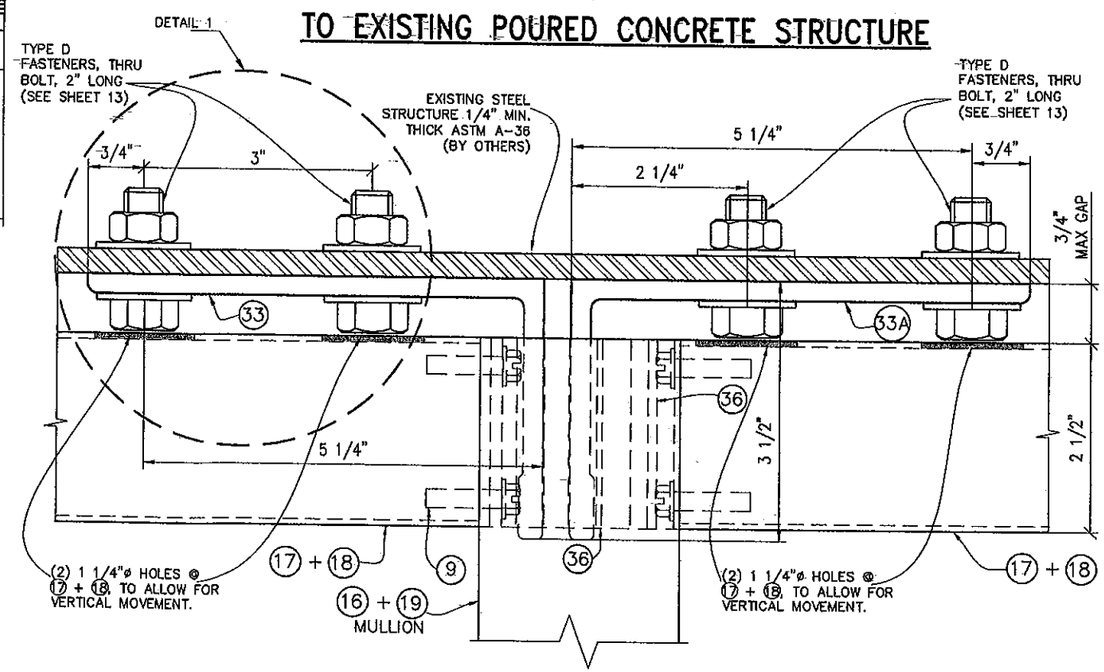

TO EXISTING STEEL STRUCTURE

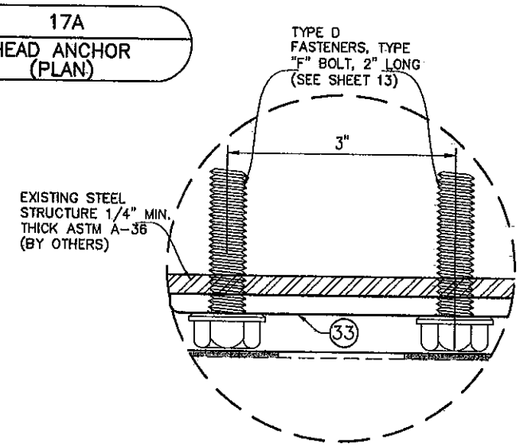

ALTERNATE FASTENER
DETAIL 1

EXTERIOR ELEVATIONS 1

FLORIDA BUILDING CODE (High Velocity Hurricane Zone)

M.C.V./A.G. DRAWN BY | 11/18/11 DATE | 11-125 DRAWING No | SHEET 24 OF 33

HR-251 SSG CAPTURED CURTAIN WALL SYSTEM LARGE & SMALL MISSILE WITH INSULATING LAMINATED GLASS

Oldcastle BuildingEnvelope™
803 Airport Rd - Terrell, TX 75160
www.OldcastleBE.com - Phone 800-869-4567

REV. No	DESCRIPTION	DATE
1	OLD 10-014	11/18/11
-	-	-
-	-	-
-	-	-

©2010 TILTECO, INC

TILTECO INC.
TILLIT TESTING & ENGINEERING COMPANY
6355 N.W. 36th, Ste. 305, VIRGINIA GARDENS, FL 33166
Phone : (305)871-1530, Fax : (305)871-1531
e-mail: tilteco@aol.com
WALTER A. TILLIT Jr., P.E.
FLORIDA Lic. # 44167

WALTER A. TILLIT JR. LICENSE No. 44167 STATE OF FLORIDA PROFESSIONAL ENGINEER
11/23/11
P.E. SEAL/SIGNATURE/DATE

PRODUCT REVISED as complying with the Florida Building Code
Acceptance No. 11-1206.09
Expiration Date FEB 17 2016
By Miami-Dade Product Control

MIAMI-DADE COUNTY

HEAD CONNECTION OF TWIN SPAN JAMBS

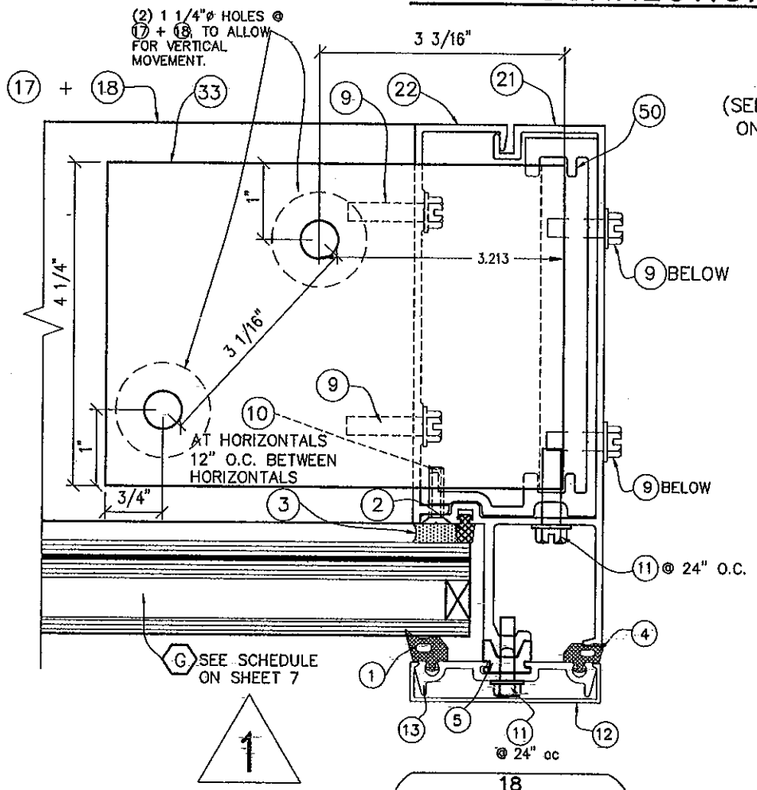

1

18
JAMB HEAD ANCHOR PLAN

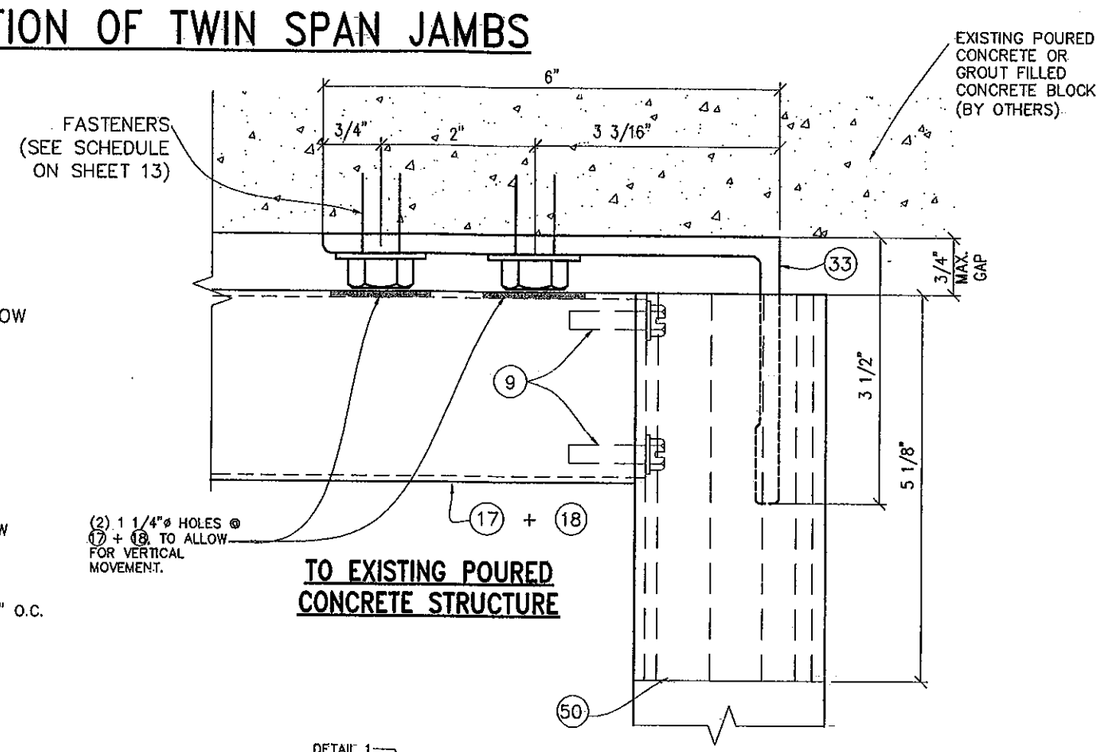

TO EXISTING POURED CONCRETE STRUCTURE

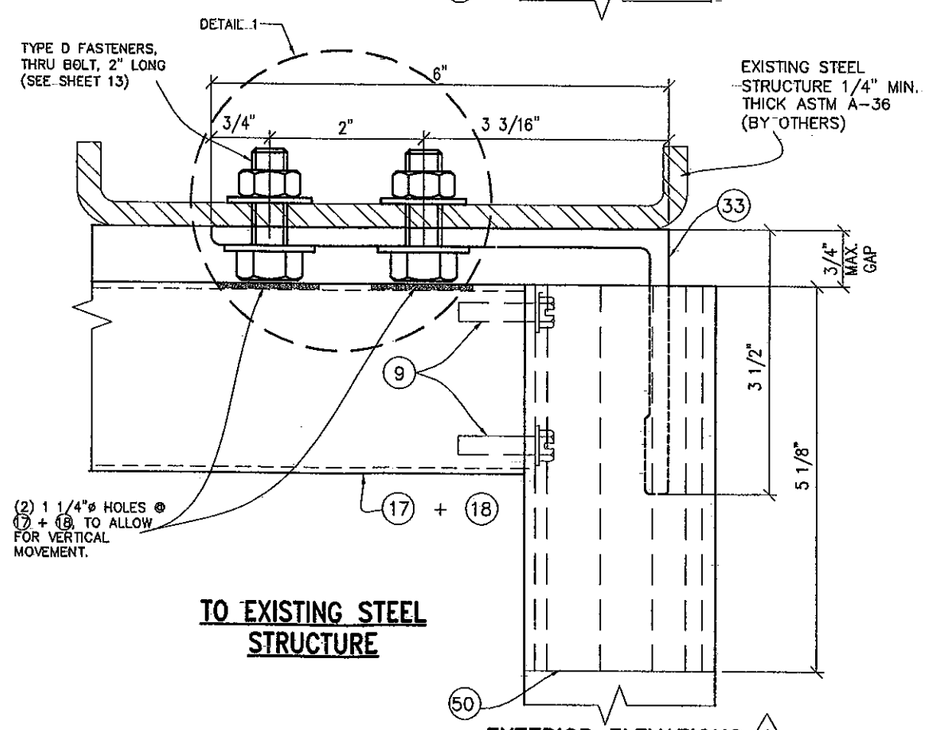

TO EXISTING STEEL STRUCTURE

EXTERIOR ELEVATIONS 1

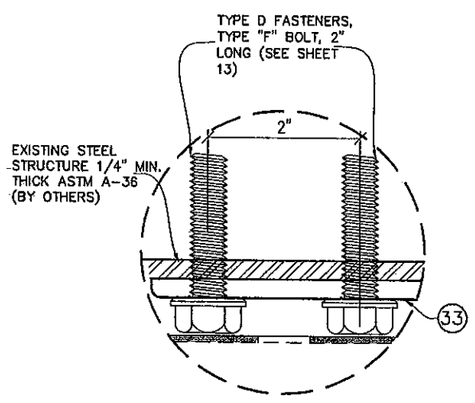

ALTERNATE FASTENER DETAIL 1

FLORIDA BUILDING CODE (High Velocity Hurricane Zone)

M.C.V./A.G. DRAWN BY

11/18/11 DATE

11-125 DRAWING No

SHEET 25 OF 33

HR-251 SSG CAPTURED CURTAIN WALL SYSTEM LARGE & SMALL MISSILE WITH INSULATING LAMINATED GLASS

Oldcastle BuildingEnvelope™
803 Airport Rd - Terrell, TX 75160
www.OldcastleBE.com - Phone 800-869-4567

REV. No	DESCRIPTION	DATE	REV. No	DESCRIPTION	DATE
1	OLD 10-014	11/18/11	-	-	-
-			-	-	-

©2010 TILTECO, INC

TILTECO INC.
TILLIT TESTING & ENGINEERING COMPANY
6355 N.W. 36th. St., Ste. 305, VIRGINIA GARDENS, FL 33166
Phone : (305)871-1530 . Fax : (305)871-1531
e-mail: tilteco@aol.com
EB-0006719
WALTER A. TILLIT Jr. P.E.
FLORIDA Lic. # 44167

WALTER A. TILLIT JR. LICENSE No. 44167 STATE OF FLORIDA PROFESSIONAL ENGINEER
11/18/11

P.E. SEAL/SIGNATURE/DATE

PRODUCT REVISED as complying with the Florida Building Code
Acceptance No 11-1206.09
Expiration Date FEB 17 2016
By Miami-Dade Product Control

MIAMI-DADE COUNTY

HEAD CONNECTION DETAIL FOR TWIN SPAN CORNER MULLION

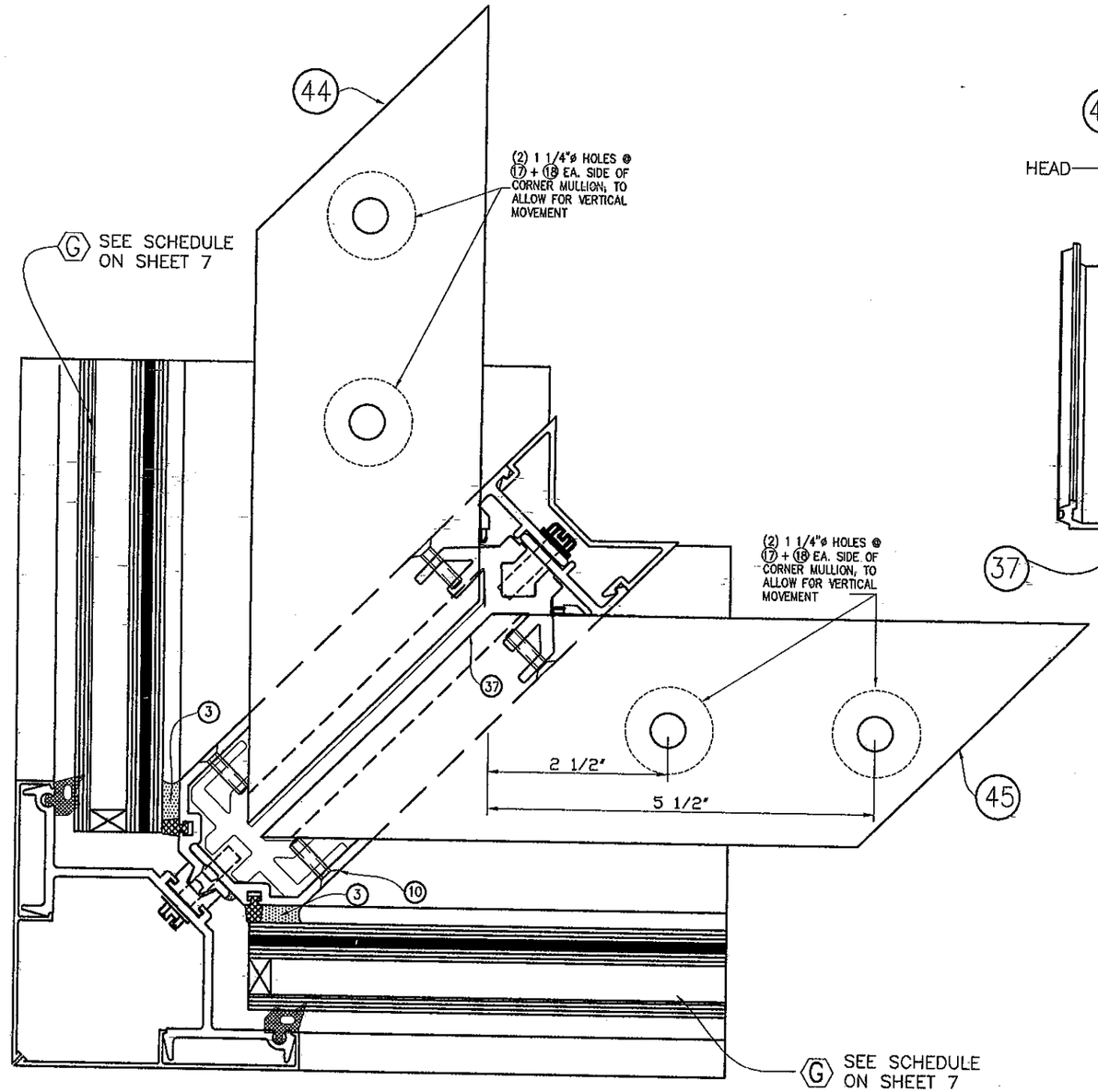

19
CORNER HEAD ANCHOR (PLAN)

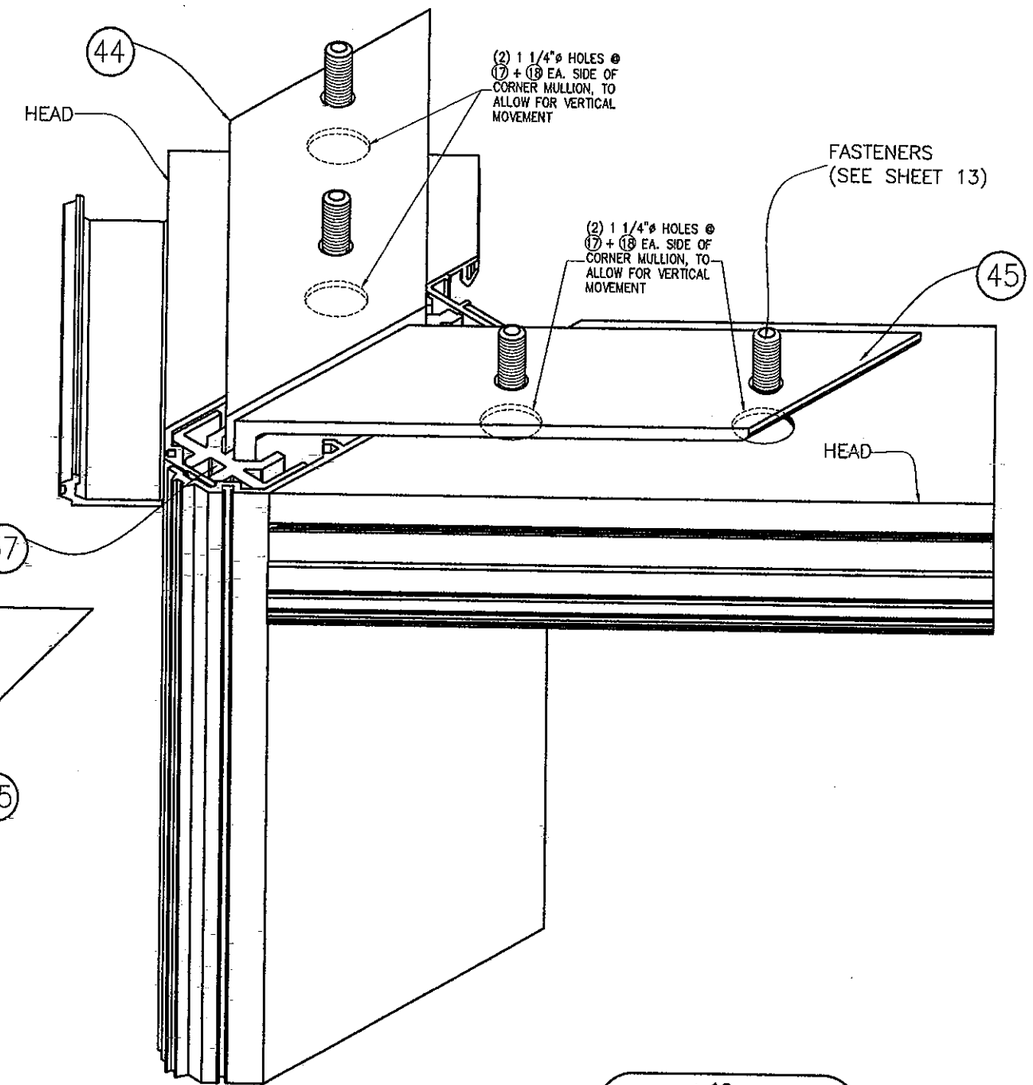

19
CORNER HEAD ANCHOR ISOMETRIC

FLORIDA BUILDING CODE (High Velocity Hurricane Zone)

HR-251 SSG CAPTURED CURTAIN WALL SYSTEM LARGE & SMALL MISSILE WITH INSULATING LAMINATED GLASS

M.C.V./A.G. DRAWN BY

11/18/11 DATE

11-125 DRAWING No

SHEET 26 OF 33

Oldcastle BuildingEnvelope™
803 Airport Rd - Terrell, TX 75160
www.OldcastleBE.com - Phone 800-869-4567

REV. No	DESCRIPTION	DATE
1	OLD 10-014	11/18/11

REV. No	DESCRIPTION	DATE
-	-	-
-	-	-

©2010 TILTECO, INC

TILTECO INC.
TILLIT TESTING & ENGINEERING COMPANY
6355 N.W. 36th. St., Ste. 305, VIRGINIA GARDENS, FL 33166
Phone : (305)871-1530 . Fax : (305)871-1531
e-mail: tilteco@aol.com
EB-0006719
WALTER A. TILLIT Jr. P.E.
FLORIDA Lic. # 44167

WALTER A. TILLIT JR. LICENSE No. 44167 STATE OF FLORIDA PROFESSIONAL ENGINEER

P.E. SEAL/SIGNATURE/DATE

PRODUCT REVISED
as complying with the Florida Building Code
Acceptance No 11-1206.09
Expiration Date FEB. 11, 2016
By
Miami-Dade Product Control

MIAMI-DADE COUNTY

MULLION AND JAMB SPLICES FOR TWIN SPAN ONLY (PLAN)

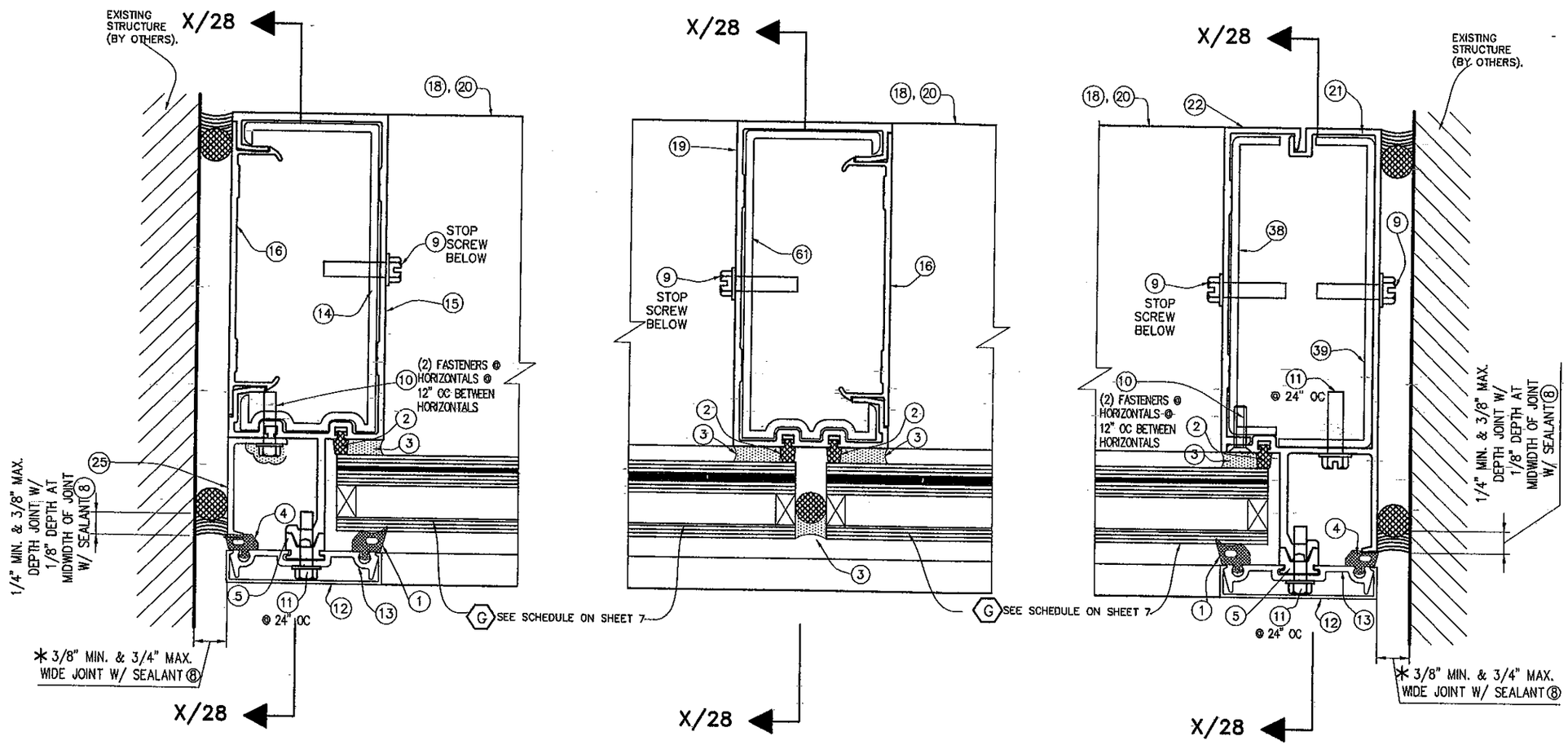

15A
SPLICE JOINT @ STANDARD JAMB W/ 14

15B
SPLICE JOINT @ STANDARD MULLION W/ 14

15C
SPLICE JOINT @ 2 PART JAMB W/ 38+39

* NOTE: ABOVE INDICATED MAXIMUM AND MINIMUM VALUES FOR SPECIFIED SEALANT VERTICAL JOINT WIDTH AT JAMBS CONNECTED TO WALL HAVE BEEN DETERMINED ONLY TAKING INTO CONSIDERATION THE ACTUAL MOVEMENT OF GLASS WALL AT JAMBS DUE TO THERMAL, WIND AND ITS OWN CONSTRUCTION TOLERANCE, AND NOT PERFORMANCE FACTORS FROM THE SURROUNDING STRUCTURE.

FLORIDA BUILDING CODE (High Velocity Hurricane Zone)

©2010 TILTECO, INC

TILTECO INC.
TILLIT TESTING & ENGINEERING COMPANY
6355 N.W. 36th. St., Ste. 305, VIRGINIA GARDENS, FL 33166
Phone : (305)871-1530 . Fax : (305)871-1531
e-mail: tilteco@aol.com
WALTER A. TILLIT Jr. P.E.
FLORIDA Lic. # 44167

M.C.V./A.G. DRAWN BY

11/18/11 DATE

11-125 DRAWING No

SHEET 27 OF 33

HR-251 SSG CAPTURED CURTAIN WALL SYSTEM LARGE & SMALL MISSILE WITH INSULATING LAMINATED GLASS

Oldcastle BuildingEnvelope™
803 Airport Rd - Terrell, TX 75160
www.OldcastleBE.com - Phone 800-869-4567

REV. No	DESCRIPTION	DATE	REV. No	DESCRIPTION	DATE
1	OLD 10-014	11/18/11	-	-	-
-			-	-	-

WALTER A. TILLIT JR. LICENSE No. 44167 STATE OF FLORIDA PROFESSIONAL ENGINEER

P.E. SEAL/SIGNATURE/DATE

PRODUCT REVISED as complying with the Florida Building Code.
Acceptance No 11-1206.09
Expiration Date FEB. 17, 2016
By Miami-Dade Product Control

MIAMI-DADE COUNTY

MULLION AND JAMB SPLICES FOR TWIN SPAN ONLY (SIDE VIEW)

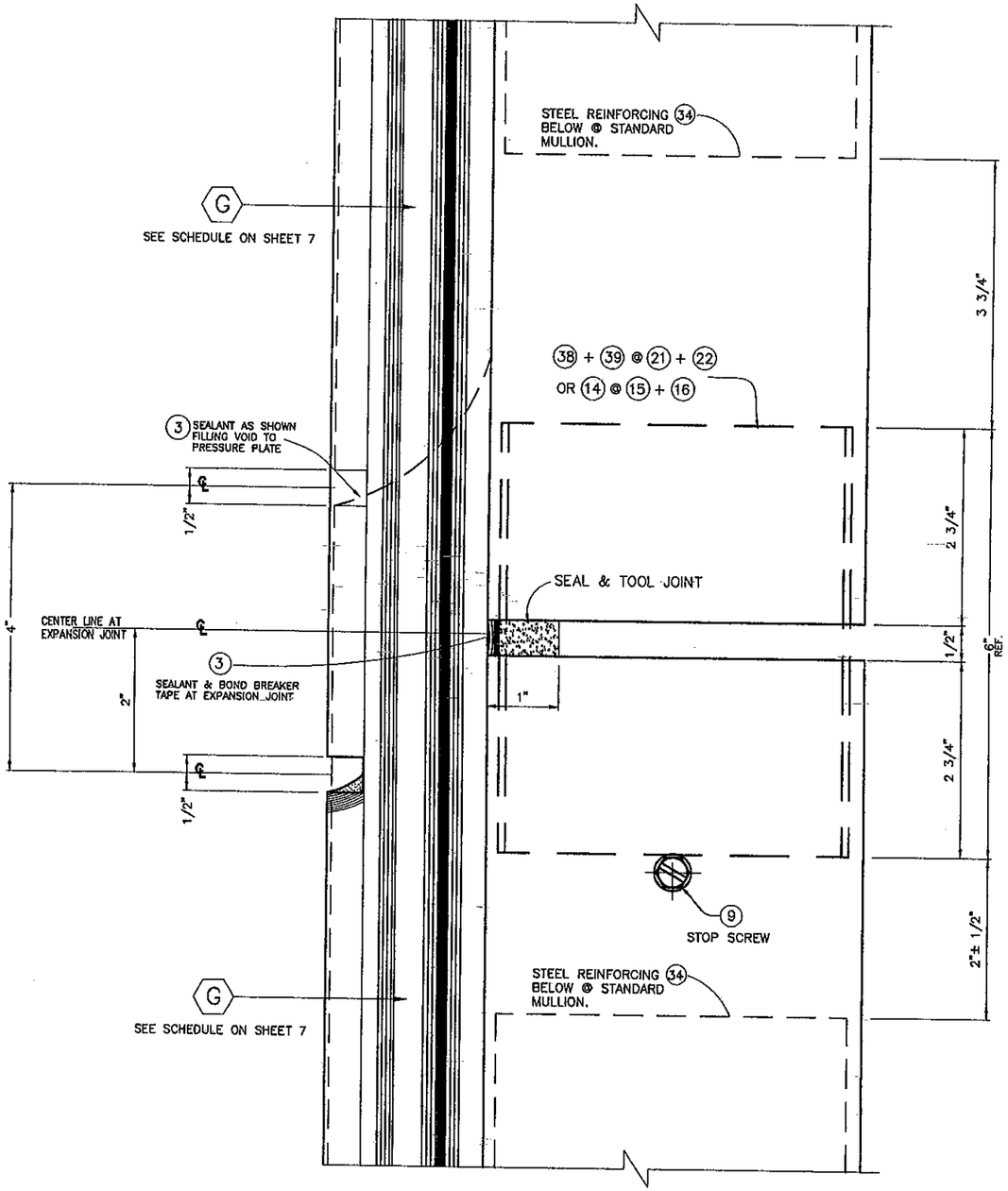

SECTION X–X
SPLICE JOINT @
STD MULLION/JAMB

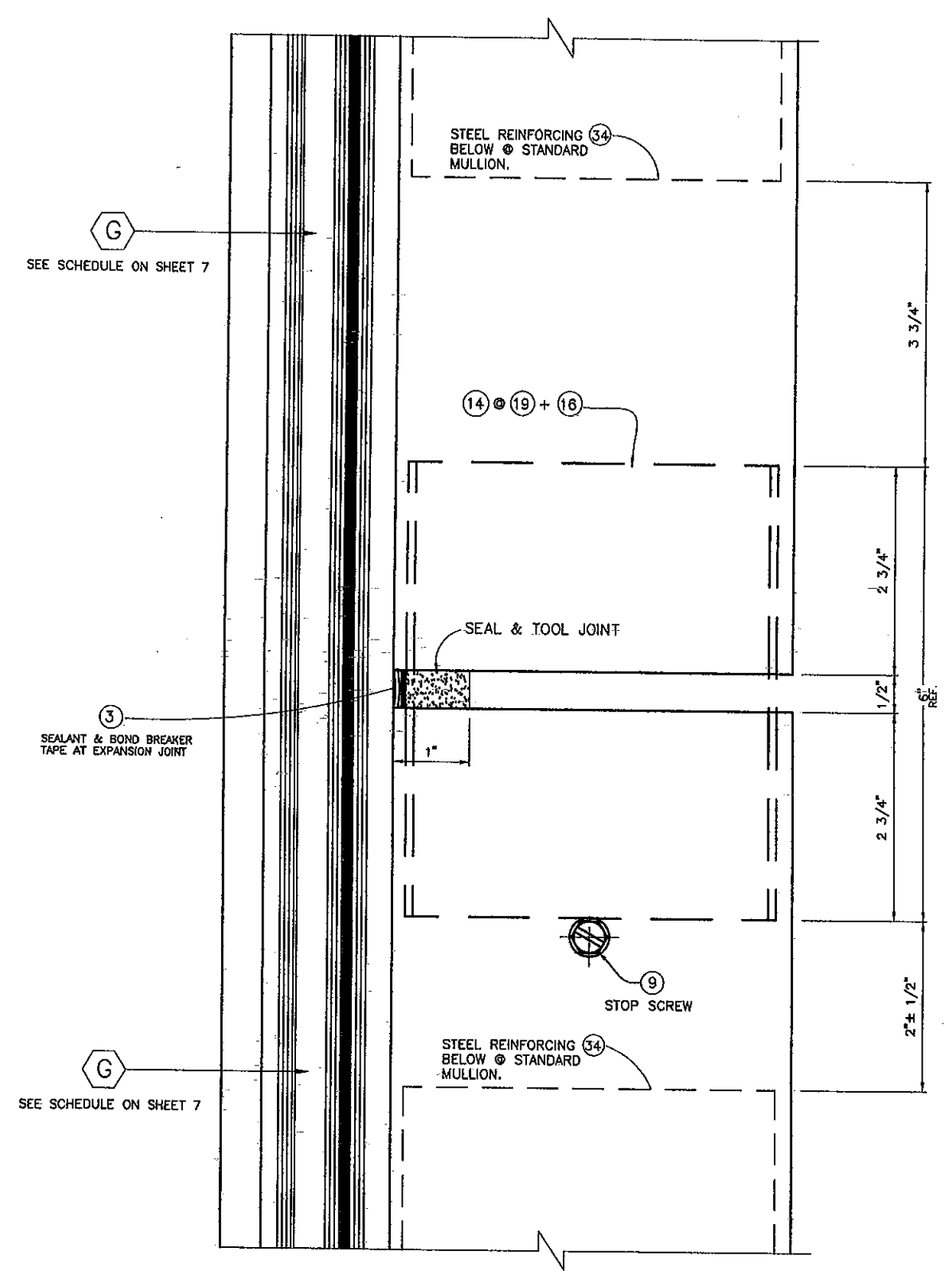

SECTION X–X
SPLICE JOINT @
BUTT GLAZE MULLION

FLORIDA BUILDING CODE (High Velocity Hurricane Zone)

HR-251 SSG CAPTURED CURTAIN WALL SYSTEM LARGE & SMALL MISSILE WITH INSULATING LAMINATED GLASS

M.C.V./A.G. DRAWN BY

11/18/11 DATE

11–125 DRAWING No

SHEET 28 OF 33

Oldcastle BuildingEnvelope™
803 Airport Rd - Terrell, TX 75160
www.OldcastleBE.com - Phone 800-869-4567

REV. No	DESCRIPTION	DATE
1	OLD 10–014	11/18/11
-	-	-

REV. No	DESCRIPTION	DATE
-	-	-
-	-	-
-	-	-

©2010 TILTECO, INC

TILTECO INC.
TILLIT TESTING & ENGINEERING COMPANY
6355 N.W. 36th. St., Ste. 305, VIRGINIA GARDENS, FL 33166
Phone : (305)871–1530 , Fax : (305)871–1531
e–mail: tilteco@aol.com
EB–0006719
WALTER A. TILLIT Jr. P.E.
FLORIDA Lic. # 44167

WALTER A. TILLIT JR. LICENSE No. 44167 STATE OF FLORIDA PROFESSIONAL ENGINEER

P.E. SEAL/SIGNATURE/DATE

PRODUCT REVISED
as complying with the Florida Building Code
Acceptance No 11-1206.09
Expiration Date FEB. 17, 2016
By Miami-Dade Product Control

MIAMI–DADE COUNTY

CORNER MULLION SPLICE FOR TWIN SPAN ONLY (PLAN)

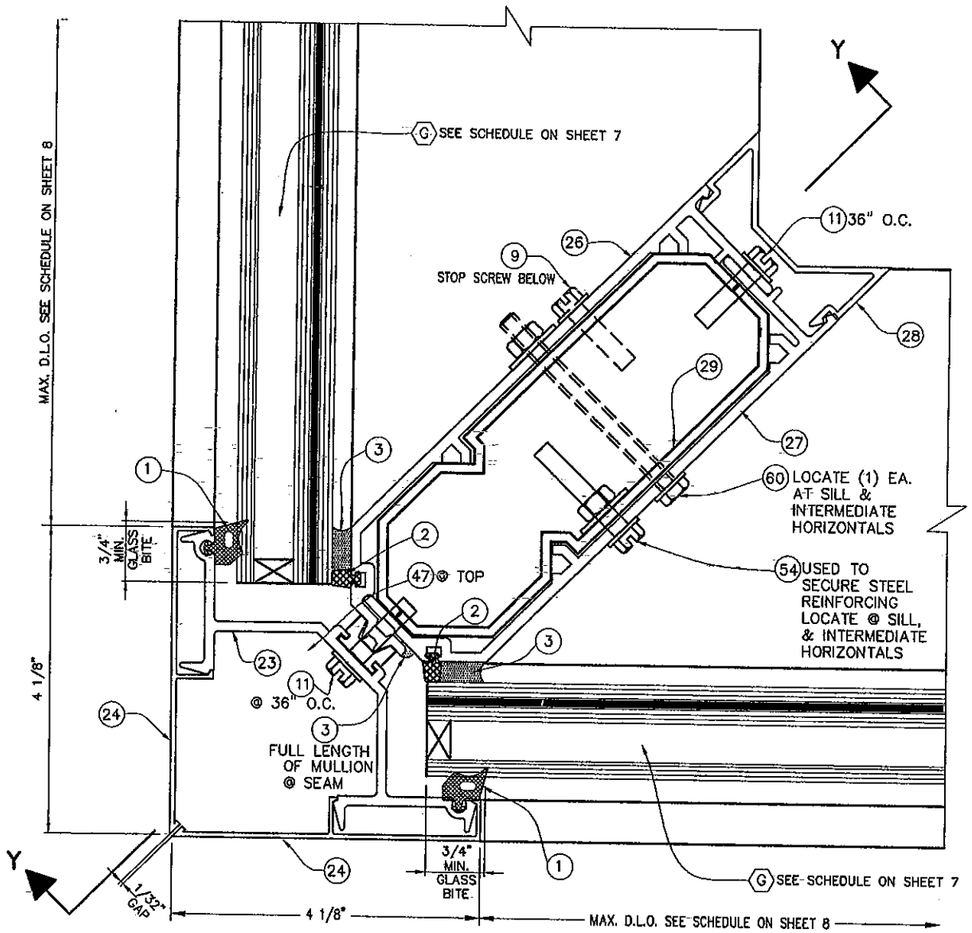

16
SPLICE JOINT @ 90 DEG. CORNER PLAN

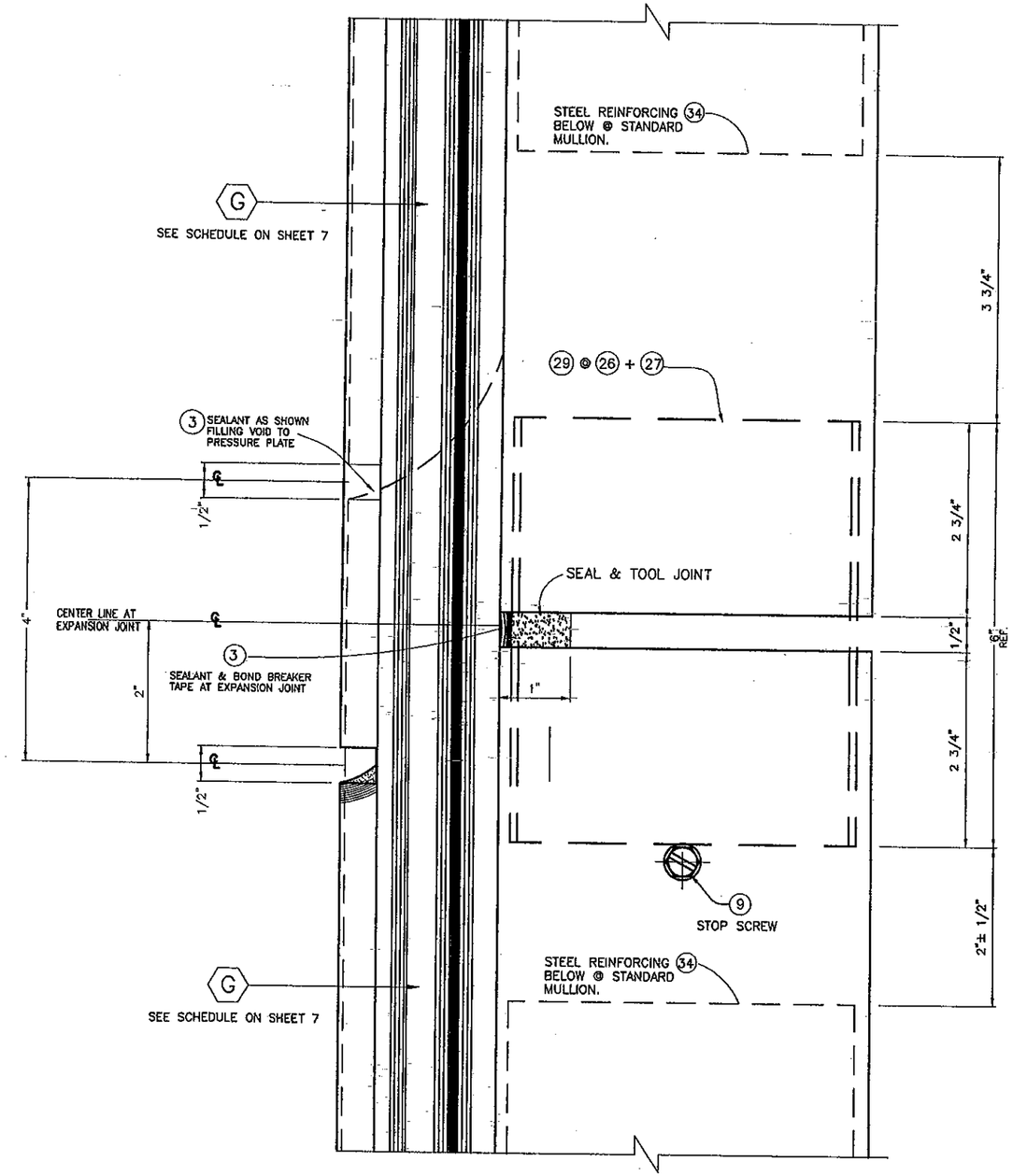

16
SPLICE JOINT @ 90 DEG. CORNER SECTION Y-Y

FLORIDA BUILDING CODE (High Velocity Hurricane Zone)

HR-251 SSG CAPTURED CURTAIN WALL SYSTEM LARGE & SMALL MISSILE WITH INSULATING LAMINATED GLASS

M.C.V./A.G. DRAWN BY

11/18/11 DATE

11-125 DRAWING No

SHEET 29 OF 33

Oldcastle BuildingEnvelope™
803 Airport Rd - Terrell, TX 75160
www.OldcastleBE.com - Phone 800-869-4567

REV. No	DESCRIPTION	DATE
1	OLD 10-014	11/18/11

REV. No	DESCRIPTION	DATE
-	-	-
-	-	-

©2010 TILTECO, INC

TILTECO INC.
TILLIT TESTING & ENGINEERING COMPANY
6355 N.W. 36th. St. Ste. 305, VIRGINIA GARDENS, FL 33166
Phone : (305)871-1530 ; Fax : (305)871-1531
e-mail: tilteco@aol.com
EB-0006719
WALTER A. TILLIT Jr. P.E.
FLORIDA Lic. # 44167

WALTER A. TILLIT JR. LICENSE No. 44167 STATE OF FLORIDA PROFESSIONAL ENGINEER

11/23/11

P.E. SEAL/SIGNATURE/DATE

PRODUCT REVISED as complying with the Florida Building Code
Acceptance No 11-1206.09
Expiration Date FEB.17.2016
By Miami Dade Product Control

MIAMI-DADE COUNTY

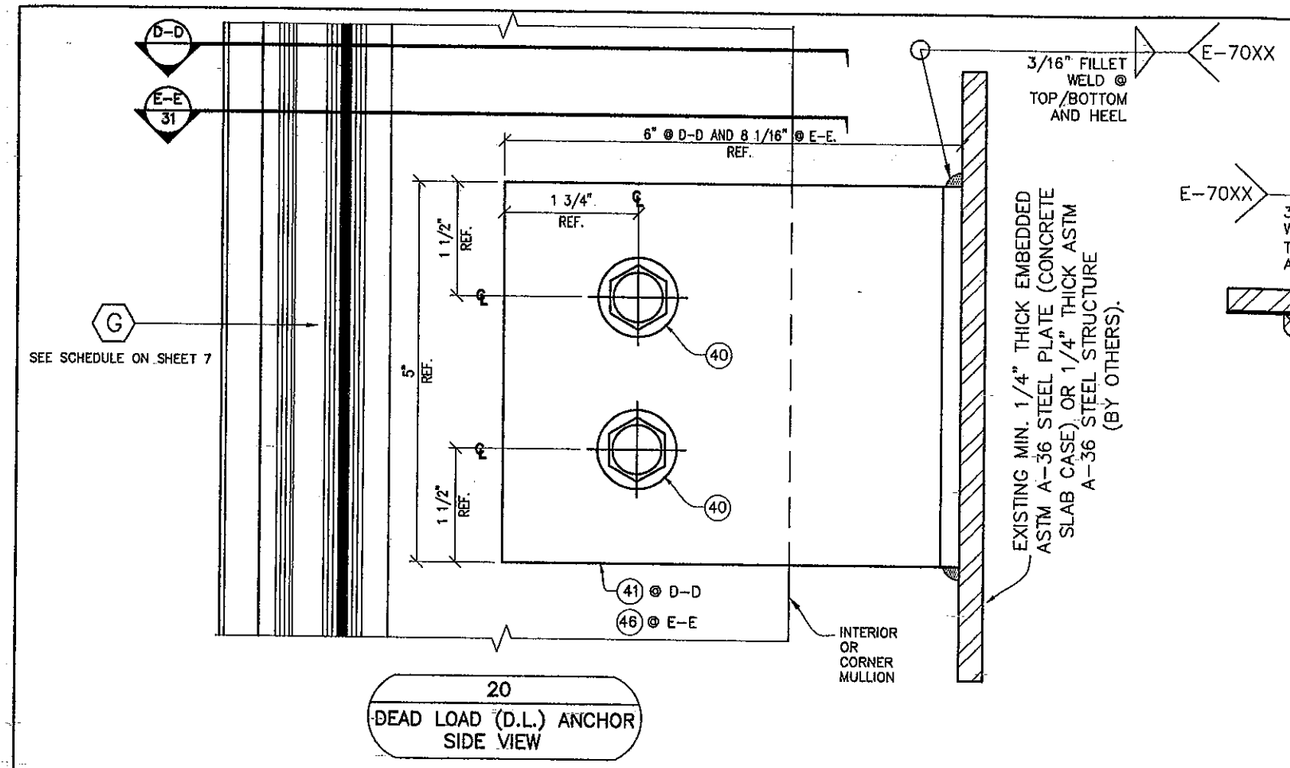

20
DEAD LOAD (D.L.) ANCHOR
SIDE VIEW

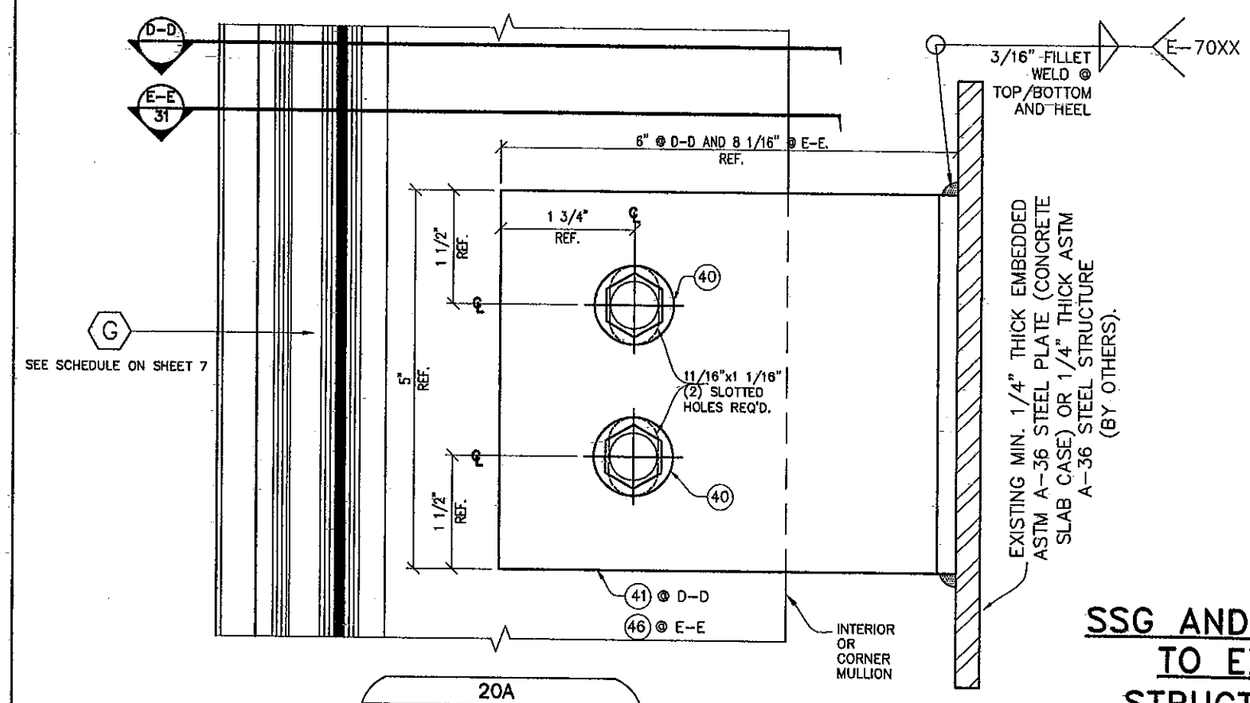

20A
WIND LOAD (W.L.) ANCHOR
SIDE VIEW

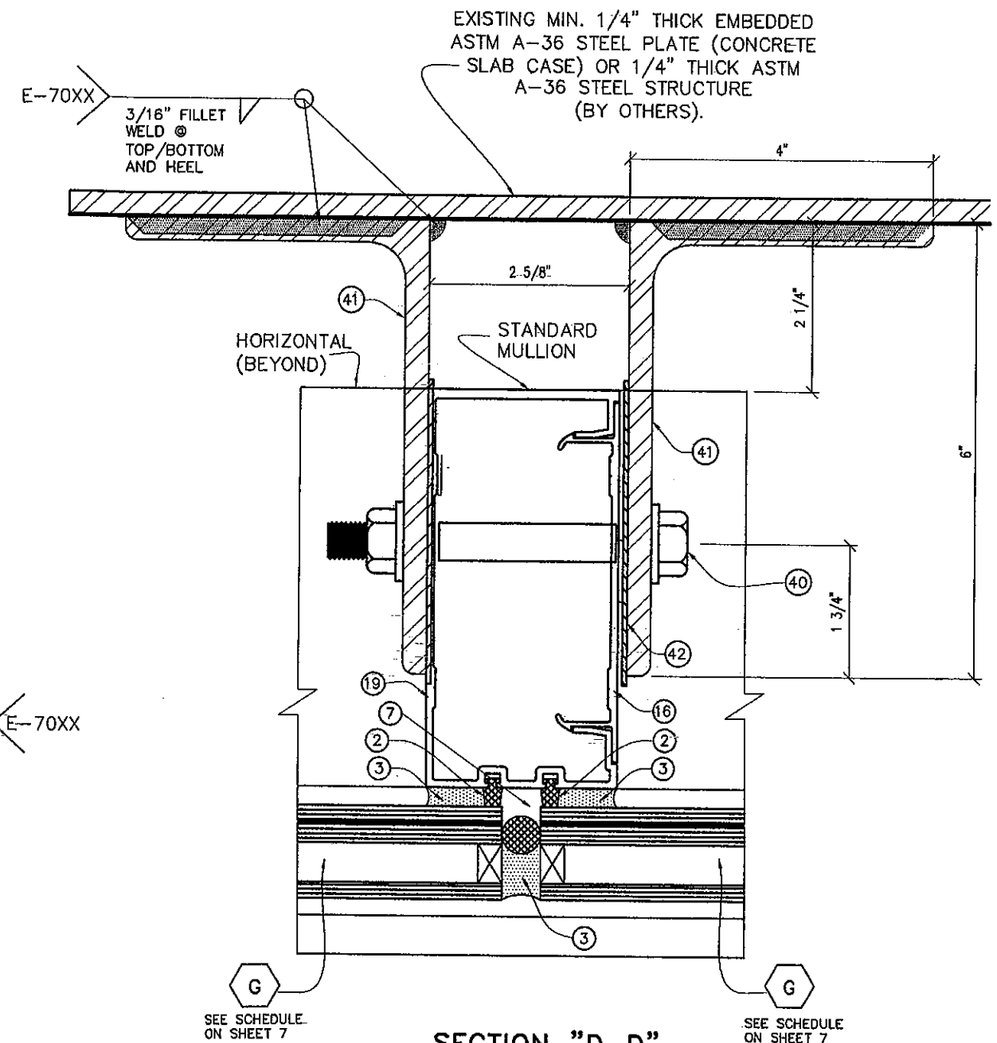

SECTION "D-D"
@ STANDARD
MULLION

SSG AND CORNER MULLIONS CONNECTION TO EXISTING INTERMEDIATE FLOOR STRUCTURE W/ DEAD OR WIND LOAD ANCHORS

FLORIDA BUILDING CODE (High Velocity Hurricane Zone)

©2010 TILTECO, INC

M.C.V./A.G.
DRAWN BY

11/18/11
DATE

11-125
DRAWING No

SHEET 30 OF 33

HR-251 SSG CAPTURED CURTAIN WALL SYSTEM LARGE & SMALL MISSILE WITH INSULATING LAMINATED GLASS

Oldcastle BuildingEnvelope™
803 Airport Rd - Terrell, TX 75160
www.OldcastleBE.com - Phone 800-869-4567

REV. No	DESCRIPTION	DATE
1	QLD 10-014	11/18/11
-	-	-

REV. No	DESCRIPTION	DATE
-	-	-
-	-	-

TILTECO INC.
TILLIT TESTING & ENGINEERING COMPANY
6355 N.W. 36th. St., Ste. 305, VIRGINIA GARDENS, FL. 33166
Phone : (305)871-1550 , Fax : (305)871-1531
e-mail: tilteco@aol.com
EB-0006719
WALTER A. TILLIT Jr. P.E.
FLORIDA Lic. # 44167

WALTER A. TILLIT JR. LICENSE No. 44167 STATE OF FLORIDA PROFESSIONAL ENGINEER

P.E. SEAL/SIGNATURE/DATE

PRODUCT REVISED
as complying with the Florida
Building Code
Acceptance No 11-1206.09
Expiration Date FEB 17 2016
By
Miami-Dade Product Control

MIAMI-DADE COUNTY

CORNER MULLION CONNECTION TO EXISTING INTERMEDIATE FLOOR STRUCTURE W/ DEAD OR WIND LOAD ANCHORS (PLAN)

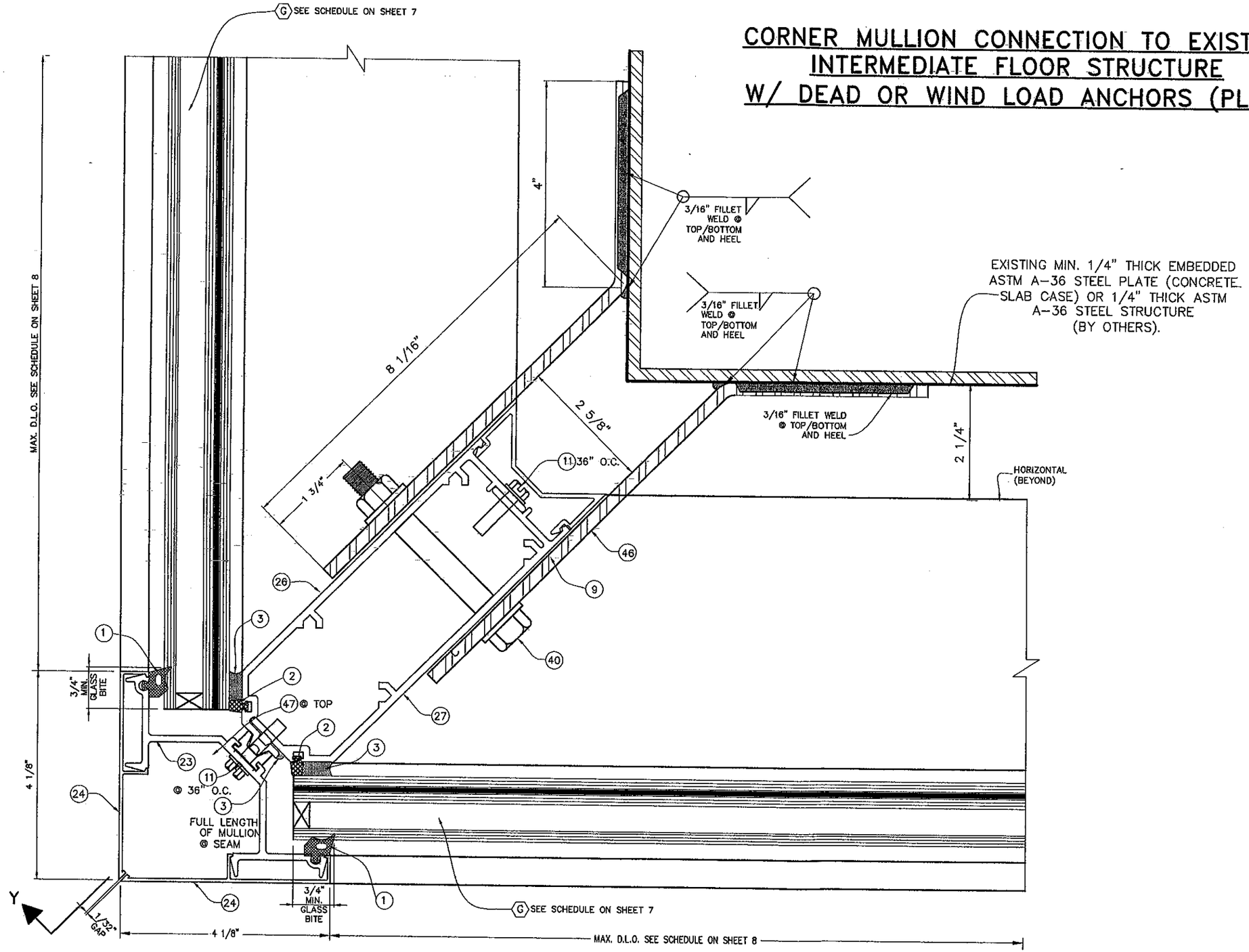

SECTION "E-E" @ CORNER MULLION

FLORIDA BUILDING CODE (High Velocity Hurricane Zone)

M.C.V./A.G. DRAWN BY

11/18/11 DATE

11-125 DRAWING No

SHEET 31 OF 33

HR-251 SSG CAPTURED CURTAIN WALL SYSTEM LARGE & SMALL MISSILE WITH INSULATING LAMINATED GLASS

Oldcastle BuildingEnvelope™
803 Airport Rd - Terrell, TX 75160
www.OldcastleBE.com - Phone 800-869-4567

REV. No	DESCRIPTION	DATE	REV. No	DESCRIPTION	DATE
1	OLD 10-014	11/18/11	-	-	-
-	-	-	-	-	-

©2010 TILTECO, INC

TILTECO INC.
TILLIT TESTING & ENGINEERING COMPANY
6355 N.W. 36th St. Ste. 305, VIRGINIA GARDENS, FL 33166
Phone : (305)871-1530 , Fax : (305)871-1531
e-mail: tilteco@aol.com
EB-0006719
WALTER A. TILLIT Jr. P.E.
FLORIDA Lic. # 44167

WALTER A. TILLIT Jr. LICENSE No. 44167 STATE OF FLORIDA PROFESSIONAL ENGINEER

P.E. SEAL/SIGNATURE/DATE

PRODUCT REVISED
as complying with the Florida Building Code
Acceptance No 11-1206.09
Expiration Date Feb. 11, 2016
By Miami Dade Product Control

MIAMI-DADE COUNTY

DOOR HEADER CONNECTION TO CURTAIN WALL HORIZONTALS

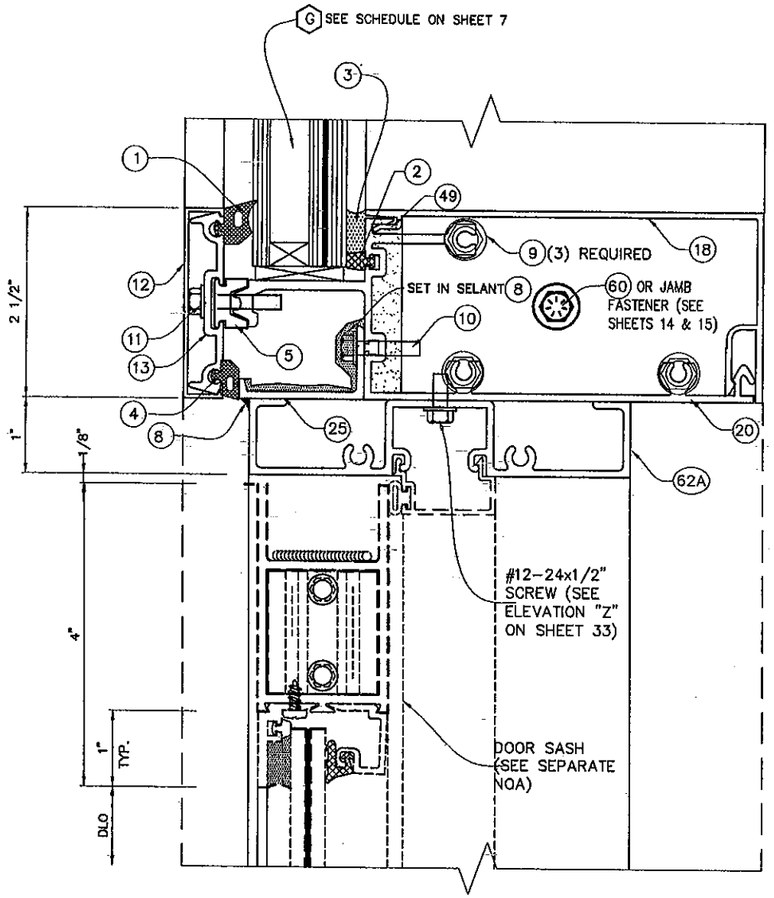

10
DR HEADER

DOOR SILL CONNECTION TO POURED CONCRETE STRUCTURE AND TO ADJACENT CURTAIN WALL MULLION "F" (SEE SHEET 9 FOR DEFINITION OF "F")

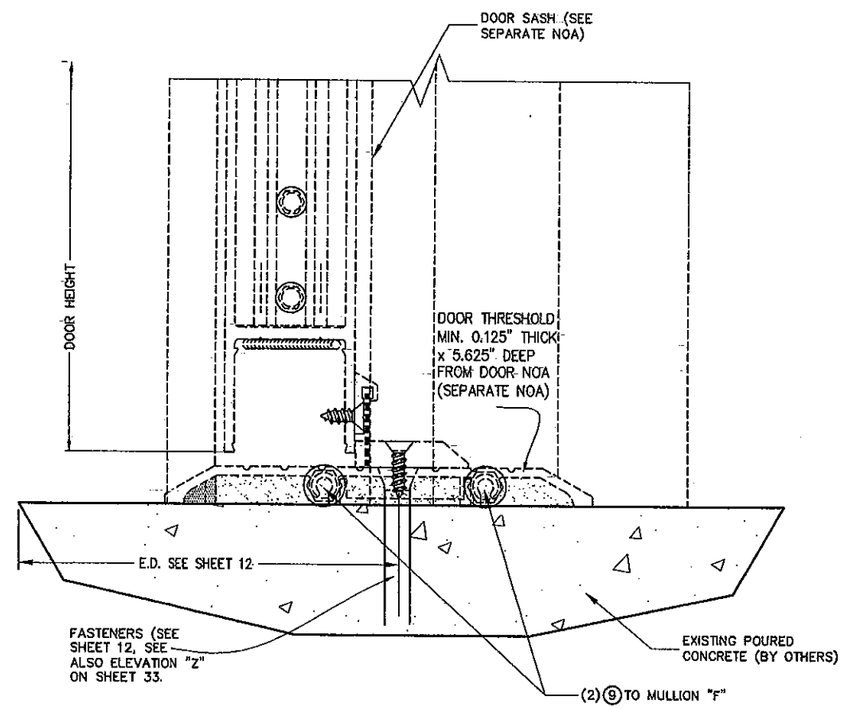

13
THRESHOLD

FLORIDA BUILDING CODE (High Velocity Hurricane Zone)

©2010 TILTECO, INC

TILTECO INC.
TILLIT TESTING & ENGINEERING COMPANY
6355 N.W. 36th. St. Ste. 305, VIRGINIA GARDENS, FL. 33166
Phone : (305)871-1530 Fax : (305)871-1531
e-mail: tilteco@aol.com
EB-0006719
WALTER A. TILLIT Jr. P.E.
FLORIDA Lic. # 44167

M.C.V./A.G.
DRAWN BY

11/18/11
DATE

11-125
DRAWING No

SHEET 32 OF 33

HR-251 SSG CAPTURED CURTAIN WALL SYSTEM LARGE & SMALL MISSILE WITH INSULATING LAMINATED GLASS

Oldcastle BuildingEnvelope™
803 Airport Rd - Terrell, TX 75160
www.OldcastleBE.com - Phone 800-869-4567

REV. No	DESCRIPTION	DATE
1	CLD 10-014	11/18/11
-	-	-

REV. No	DESCRIPTION	DATE
-	-	-
-	-	-

WALTER A. TILLIT JR. LICENSE No. 44167 STATE OF FLORIDA PROFESSIONAL ENGINEER

P.E. SEAL/SIGNATURE/DATE

PRODUCT REVISED
as complying with the Florida
Building Code
Acceptance No 11-1206.03
Expiration Date ~~FEB 17 2016~~
By Miami Dade Product Control

MIAMI-DADE COUNTY

DOOR JAMBS CONNECTION TO CURTAIN WALL

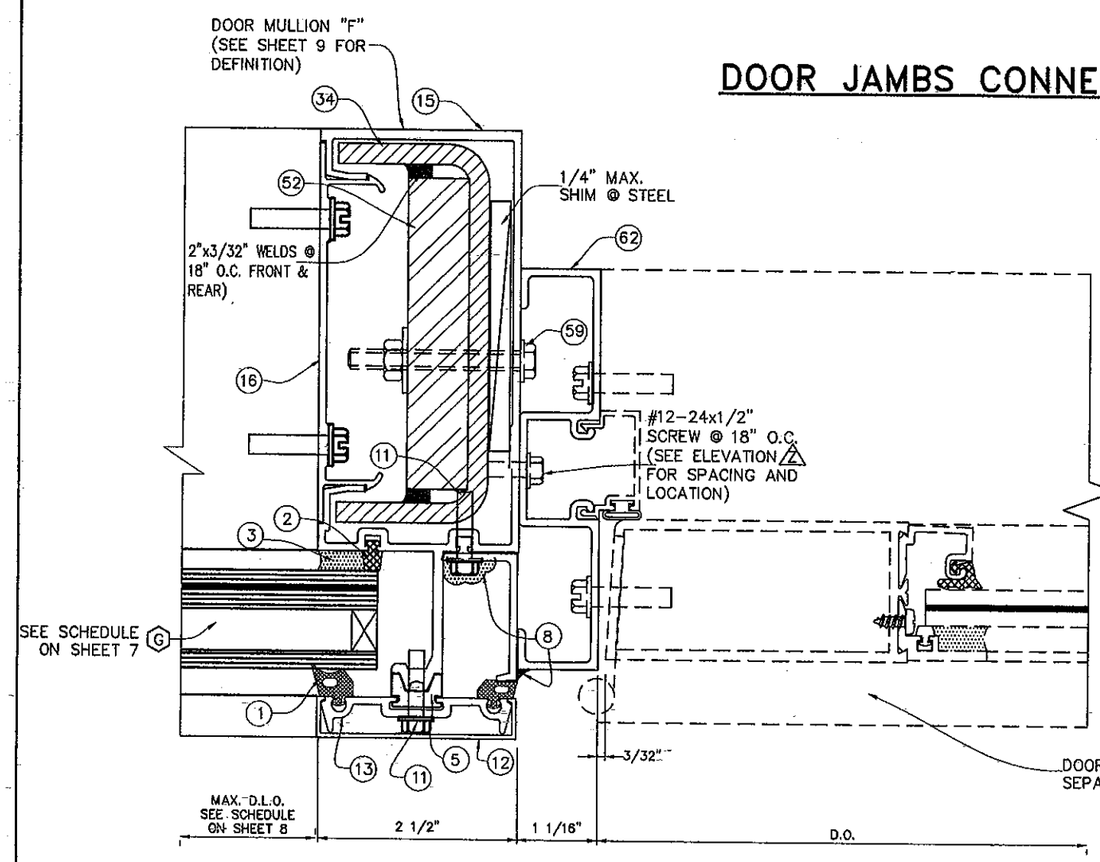

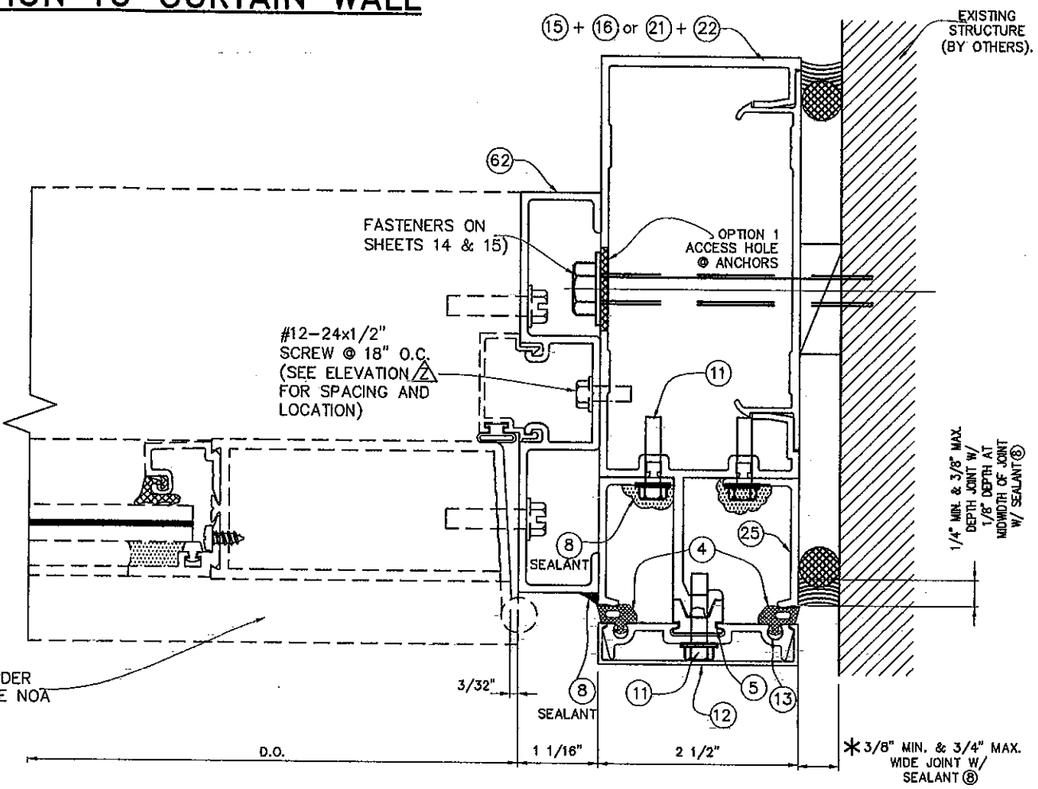

12
DOOR JAMB TO CURTAIN WALL DOOR JAMB MULLION

11
DOOR JAMB TO CURTAIN WALL JAMB

* NOTE: INDICATED MAXIMUM AND MINIMUM VALUES FOR SPECIFIED SEALANT VERTICAL JOINT WIDTH AT JAMBS CONNECTED TO WALL HAVE BEEN DETERMINED ONLY TAKING INTO CONSIDERATION THE ACTUAL MOVEMENT OF GLASS WALL AT JAMBS DUE TO THERMAL, WIND AND ITS OWN CONSTRUCTION TOLERANCE, AND NOT PERFORMANCE FACTORS FROM THE SURROUNDING STRUCTURE.

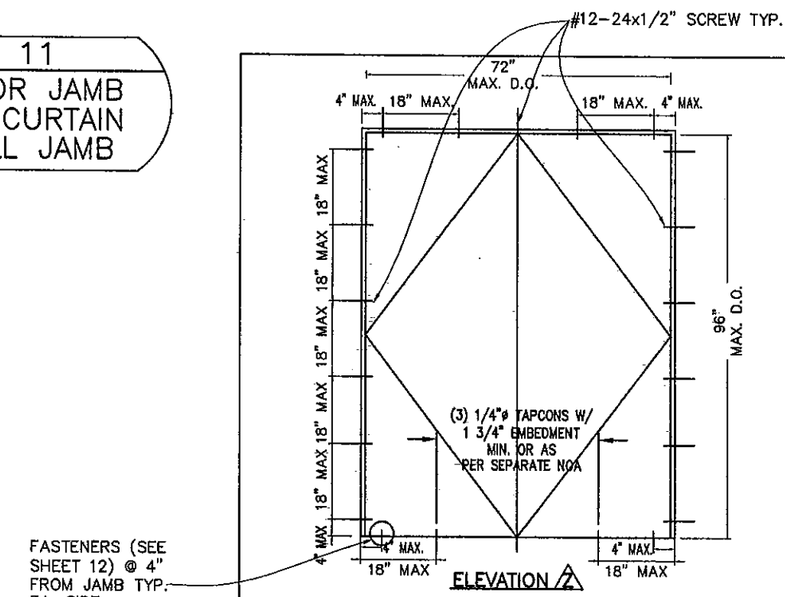

ELEVATION 2

LOCATIONS FOR DOOR FRAME ATTACHMENTS

ABOVE DIMENSIONS ARE MAXIMUM SIZES TESTED

FLORIDA BUILDING CODE (High Velocity Hurricane Zone)

M.C.V./A.G. DRAWN BY

11/18/11 DATE

11-125 DRAWING No

SHEET 33 OF 33

HR-251 SSG CAPTURED CURTAIN WALL SYSTEM LARGE & SMALL MISSILE WITH INSULATING LAMINATED GLASS

Oldcastle BuildingEnvelope™
803 Airport Rd - Terrell, TX 75160
www.OldcastleBE.com - Phone 800-869-4567

REV. No	DESCRIPTION	DATE	REV. No	DESCRIPTION	DATE
1	OLD 10-014	11/18/11	-	-	-
-			-	-	-

©2010 TILTECO, INC

TILTECO INC.
TILLIT TESTING & ENGINEERING COMPANY
6355 N.W. 36th. St., Ste. 305, VIRGINIA GARDENS, FL 33166
Phone : (305)871-1530 , Fax : (305)871-1531
e-mail: tilteco@aol.com
EB-0006719
WALTER A. TILLIT Jr. P.E.
FLORIDA Lic. # 44167

WALTER A. TILLIT JR. LICENSE No. 44167 STATE OF FLORIDA PROFESSIONAL ENGINEER

P.E. SEAL/SIGNATURE/DATE

PRODUCT REVISED as complying with the Florida Building Code
Acceptance No 11-1206.09
Expiration Date FEB 17 2016
By Manuel Sera
Miami Dade Product Control

MIAMI-DADE COUNTY