MIAMI-DADE COUNTY
DEPARTMENT OF PERMITTING, ENVIRONMENT, AND REGULATORY AFFAIRS (PERA)
BOARD AND CODE ADMINISTRATION DIVISION

MIAM –DADE COUNTY, FLORIDA
PRODUCT CONTROL SECTION
11805 SW 26 Street, Room 208
Miami, Florida 33175–2474
T (786) 315–2590 F (786) 315–2599
www.miamidade.gov/pera/

NOTICE OF ACCEPTANCE (NOA)

Trulite Glass & Aluminum Solution, LLC
800 Fairway Drive, Suite # 200
Deerfield Beach, Fl. 33441

SCOPE:

This NOA is being issued under the applicable rules and regulations governing the use of construction materials. The documentation submitted has been reviewed and accepted by Miami–Dade County PERA–Product Control Section to be used in Miami–Dade County and other areas where allowed by the Authority Having Jurisdiction (AHJ).

This NOA shall not be valid after the expiration date stated below. The Miami–Dade County Product Control Section (In Miami–Dade County) and/or the AHJ (in areas other than Miami–Dade County) reserve the right to have this product or material tested for quality assurance purposes. If this product or material fails to perform in the accepted manner, the manufacturer will incur the expense of such testing and the AHJ may immediately revoke, modify, or suspend the use of such product or material within their jurisdiction. PERA reserves the right to revoke this acceptance, if it is determined by Miami–Dade County Product Control Section that this product or material fails to meet the requirements of the applicable building code.

This product is approved as described herein, and has been designed to comply with the Florida Building Code, including the High Velocity Hurricane Zone.

DESCRIPTION: Series "Resistor FG–4500/ 450EZ" Aluminum Flush Glazed Storefront System–N. I.

APPROVAL DOCUMENT: Drawing No. **AD11–27**, titled "Resistor Series 4500/ 450EZ Storefront Wall Non–Impact", sheets 1 through 11 of 11, dated 10/11/11, revision "1", dated 04/16/12, prepared by MCY Engineering, Inc., signed and sealed by Yiping Wang, P. E., bearing the Miami–Dade County Product Control Revision stamp with the Notice of Acceptance number and expiration date by the Miami–Dade County Product Control Section.

MISSILE IMPACT RATING: None.

LABELING: Each unit shall bear a permanent label with the manufacturer's name or logo, **Medley, Florida**, series, and following statement: "Miami–Dade County Product Control Approved", unless otherwise noted herein.

RENEWAL of this NOA shall be considered after a renewal application has been filed and there has been no change in the applicable building code negatively affecting the performance of this product.

TERMINATION of this NOA will occur after the expiration date or if there has been a revision or change in the materials, use, and/ or manufacture of the product or process. Misuse of this NOA as an endorsement of any product, for sales, advertising or any other purposes shall automatically terminate this NOA. Failure to comply with any section of this NOA shall be cause for termination and removal of NOA.

ADVERTISEMENT: The NOA number preceded by the words Miami–Dade County, Florida, and followed by the expiration date may be displayed in advertising literature. If any portion of the NOA is displayed, then it shall be done in its entirety.

INSPECTION: A copy of this entire NOA shall be provided to the user by the manufacturer or its distributors and shall be available for inspection at the job site at the request of the Building Official.

This NOA **revises NOA No. 10–0511.04** and consists of this page 1 and evidence pages E–1, and E–2, as well as approval document mentioned above.

The submitted documentation was reviewed by **Jaime D. Gascon, P. E.**

MIAMI-DADE COUNTY APPROVED

J Gascon
5/2/12

NOTICE OF ACCEPTANCE: EVIDENCE SUBMITTED

A. DRAWINGS

1. Manufacturer's die drawings and sections.
   (Submitted under previous NOA No.'s 00–1220.05 and 08–1024.06)
2. Drawing No. **AD11–27**, titled "Resistor Series 4500/ 450EZ Storefront Wall Non–Impact", sheets 1 through 11 of 11, dated 10/11/11, revision "**1**", dated 04/16/12, prepared by MCY Engineering, Inc., signed and sealed by Yiping Wang, P. E.

B. TESTS

1. Test reports on: 1) Air Infiltration Test, per FBC, TAS 202–94
   2) Uniform Static Air Pressure Test, Loading per FBC TAS 202–94
   3) Water Resistance Test, per FBC, TAS 202–94
   along with marked–up drawings and installation diagram of an aluminum storefront system, prepared by Fenestration Testing Laboratory, Inc., Test Report No. **FTL–5326**, dated 07/26/07, signed and sealed by Carlos S. Rionda, P. E.
   (Submitted under previous NOA No. 08–1024.06)
2. Test reports on: 1) Air Infiltration Test, per FBC, TAS 202–94
   2) Uniform Static Air Pressure Test, Loading per FBC TAS 202–94
   3) Water Resistance Test, per FBC, TAS 202–94
   along with marked–up drawings and installation diagram of an aluminum door line, prepared by Fenestration Testing Laboratory, Inc., Test Reports No. **FTL–1548**, dated 01/15/97, signed and sealed by Gilbert Diamond, P. E.
   (Submitted under previous NOA No. 00–1220.05)

C. CALCULATIONS:

1. Anchor verification calculations and structural analysis, complying with FBC–2007, prepared by Al–Farooq Corporation, dated 04/20/10, signed and sealed by Arshad Viqar, P. E.
   (Submitted under previous NOA No. 10–0511.04)
2. **Glazing complies with ASTM E1300–04**

D. QUALITY ASSURANCE

1. Miami–Dade Department of Permitting, Environment, and Regulatory Affairs (PERA).

E. MATERIAL CERTIFICATIONS

1. None.

Jaime D. Gascon, P. E.
Product Control Section Supervisor
NOA No. 11–1207.07
Expiration Date: March 19, 2016
Approval Date: May 10, 2012

NOTICE OF ACCEPTANCE: EVIDENCE SUBMITTED

F. STATEMENTS

1. Statement letter of no financial interest, conformance and complying with FBC–2010, dated 12/01/11, signed and sealed by Yiping Wang, P. E.
2. Letter of *Adoption of as his/ her own as the Work of another Engineer* per section 61G15–27.001 of the F.B.P.E., per Section 423.4.3 of FBC 2001 through 2010 and per section 553.842 of Florida Statue 553, dated 03/01/12, signed and sealed by Yiping Wang, P. E.
3. Certificate of name change amendment dated 07/27/11, issued by The State of Delaware for Arch Aluminum Glass, LLC to Trulite Glass & Aluminum Solution, LLC, signed by Jeffery W. Bullock, Secretary of State.
4. Florida Dept of State, listing dated 02/03/10 of Trulite Glass & Aluminum Solution, LLC (Foreign Ltd. Liability Co.), managed by Arch Intermediate Holding, LLC, Tamarac, Fl.
5. Laboratory compliance letter for Test Report No. **FTL–5326** issued by Fenestration Testing Laboratory, Inc., dated 07/27/07, signed and sealed by Carlos S. Rionda, P. E. ***(Submitted Under NOA No. 08–1024.06)***
6. Laboratory compliance letter for Test Report No. **FTL–1548** issued by Fenestration Testing Laboratory, Inc., dated 01/15/97, signed and sealed by Gilbert Diamond, P. E. ***(Submitted Under NOA No. 00–1220.05)***

G. OTHERS

2. Notice of Acceptance No. **10–0511.04**, issued to Arch Aluminum & Glass Co., Inc. for their "**Series FG–4500/ 450EZ Aluminum Flush Glazed Storefront System – N.I.**", approved on 09/22/10 and expiring on 03/19/16.

Jaime D. Gascon, P. E.
Product Control Section Supervisor
NOA No. 11–1207.07
Expiration Date: March 19, 2016
Approval Date: May 10, 2012

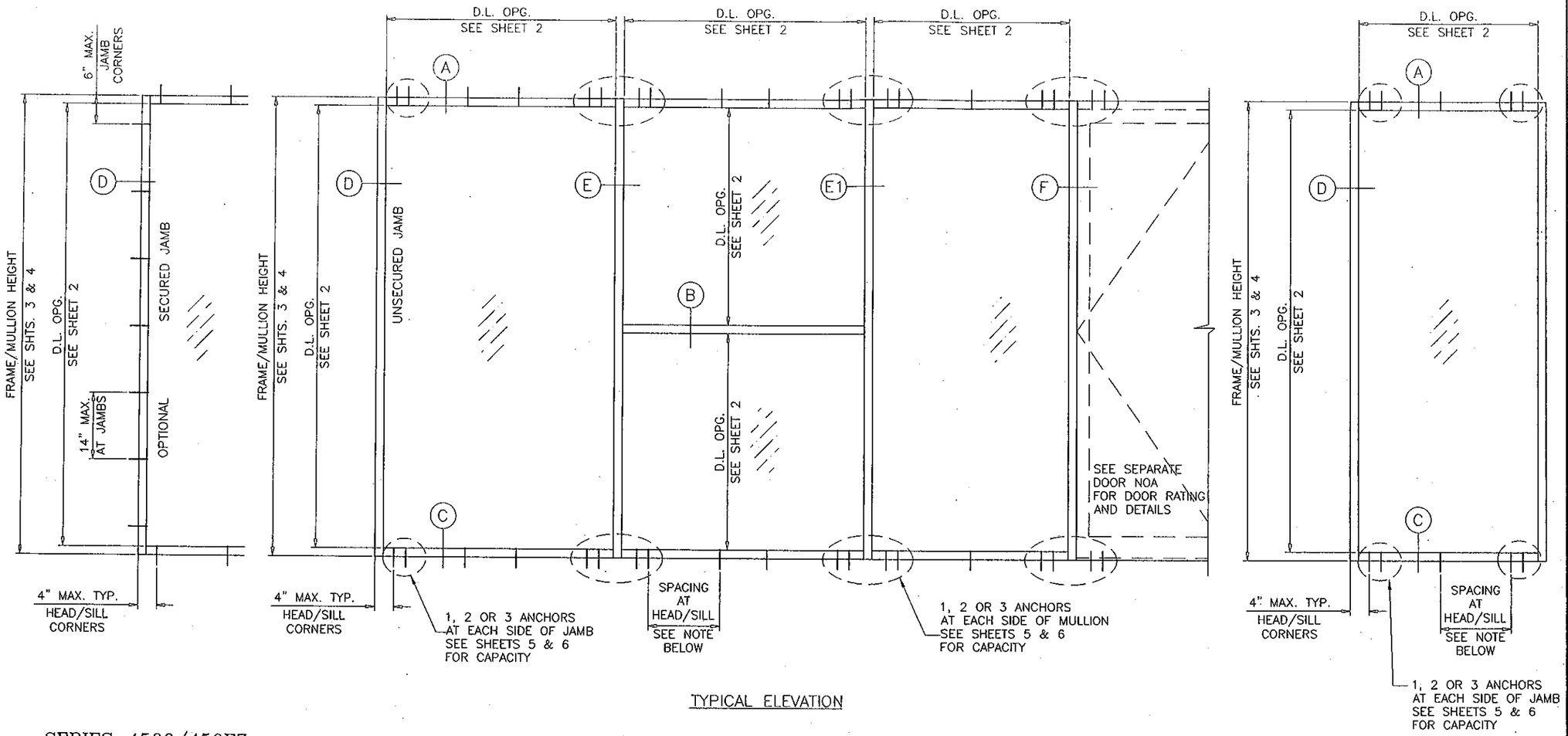

TYPICAL ELEVATION

SERIES-4500/450EZ
ALUMINUM FLUSH GLAZED STOREFRONT SYSTEM

- THIS SYSTEM IS NOT RATED FOR IMPACT.
- THIS SYSTEM MAY BE USED IN CONJUCTION WITH MIAMI-DADE COUNTY APPROVED OUTSWING ENTRANCE DOORS.
- CODE REQUIREMENTS FOR SAFEGUARDS MUST BE OBSERVED.

- THIS PRODUCT HAS BEEN DESIGNED AND TESTED TO COMPLY WITH THE REQUIREMENTS OF THE FLORIDA BUILDING CODE 2007/2010 EDITION INCLUDING HIGH VELOCITY HURRICANE ZONE (HVHZ).
- WOOD BUCKS BY OTHERS, MUST BE ANCHORED PROPERLY TO TRANSFER LOADS TO THE STRUCTURE.
- ANCHORS SHALL BE AS LISTED, SPACED AS SHOWN ON DETAILS, ANCHORS EMBEDMENT TO BASE MATERIAL SHALL BE BEYOND WALL DRESSING OR STUCCO.
- ANCHORING OR LOADING CONDITIONS NOT SHOWN IN THESE DETAILS ARE NOT PART OF THIS APPROVAL.
- A LOAD DURATION INCREASE IS USED IN DESIGN OF ANCHORS INTO WOOD ONLY.
- MATERIALS INCLUDING BUT NOT LIMITED TO STEEL/METAL SCREWS, THAT COME INTO CONTACT WITH OTHER DISSIMILAR MATERIALS SHALL MEET THE REQUIREMENTS OF 2010 FLORIDA BLDG. CODE SECTION 2003.8.4.

INTERMEDIATE ANCHOR SPACING AT HEAD/SILL :
15" O.C. MAX. TYPICAL
13" O.C. MAX. FOR INSTALLATIONS INTO WOOD STRUCTURES ONLY

INSTRUCTIONS:

USE CHARTS AS FOLLOWS.

STEP 1 DETERMINE DESIGN WIND LOAD REQUIREMENTS BASED ON WIND VELOCITY, BLDG. HEIGHT, WIND ZONE USING APPLICABLE ASCE 7 STANDARD.

STEP 2 SEE CHARTS ON SHEETS 2 FOR DESIGN LOAD CAPACITY OF DESIRED GLASS SIZE.

STEP 3 CHECK MULLION CAPACITY FOR A GIVEN SPACING AND HEIGHT USING CHARTS ON SHEETS 3 & 4 THE CAPACITY SHOULD EXCEED THE DESIGN LOAD.

STEP 4 USING CHART ON SHEETS 5 SELECT ANCHOR OPTION WITH DESIGN RATING MORE THAN DESIGN LOAD SPECIFIED IN STEP 1 ABOVE.

STEP 5 THE LOWEST VALUE RESULTING FROM STEPS 2, 3 AND 4 SHALL APPLY TO ENTIRE SYSTEM.

- INSTALLATION OF THIS PRODUCT IN THE HVHZ AREA REQUIRES THE USE OF APPROVED SHUTTERS OR EXTERNAL PROTECTION DEVICES COMPLYING WITH HVHZ REQUIREMENTS.
- INSTALLATION OF THIS SYSTEM OUTSIDE THE HVHZ AREA SHALL MEET THE APPLICABLE REQUIREMENTS FOR WIND BORNE DEBRIS PROTECTION.

Trulite
GLASS & ALUMINUM SOLUTIONS™
http://www.trulite.com
800 FAIRWAY DRIVE, Suite 200
DEERFIELD BEACH, FL 33441
p. 800-432-8132 | f. 954-724-2083

PRODUCT:

Resistor
Series 4500 / 450EZ
STOREFRONT WALL
NON - IMPACT

Resistor PRODUCT SERIES

REVN	DATE/REMARKS
1	4/16/12 UPDATE TO 2010 FBC

ENGINEER:
MCY ENGINEERING, INC.
GLAZING CONSULTANT
8501 SW 124th Ave. Suite 205A
MIAMI, FL 33183
P: 305-271-0117
Email: MCY.Engineering@att.net
www.MCYEngineering.com

STAMP:
YIRING WANG, P.E.
FLORIDA REGISTRATION
PE 55983
C.A.N. 28677
YIRING WANG LICENSE No 55983 STATE OF FLORIDA PROFESSIONAL ENGINEER
APR 16 2012

PRODUCT CONTROL APPROVAL:

PRODUCT REVISED
as complying with the Florida
Building Code
Acceptance No 11-1207.07
Expiration Date 03/19/2016
By
Miami Dade Product Control

DRAWN: S.L.	DRAWING No:
DATE: 10-11-11	1 OF 11
DWG: AD11-27	

GLASS LOAD CAPACITY - PSF		
NOMINAL DIMS.		1/4" TEMP. GLASS
D.L.O. WIDTH	D.L.O. HEIGHT	EXT.(+)/INT.(-)
22-1/4"	68-1/2"	130.0
28-1/4"		130.0
34-1/4"		130.0
40-1/4"		130.0
46-1/4"		130.0
52-1/4"		130.0
22-1/4"	74-1/2"	130.0
28-1/4"		130.0
34-1/4"		130.0
40-1/4"		130.0
46-1/4"		130.0
52-1/4"		130.0
22-1/4"	80-1/2"	130.0
28-1/4"		130.0
34-1/4"		130.0
40-1/4"		130.0
46-1/4"		130.0
52-1/4"		130.0
22-1/4"	86-1/2"	130.0
28-1/4"		130.0
34-1/4"		130.0
40-1/4"		130.0
46-1/4"		130.0
22-1/4"	92-1/2"	130.0
28-1/4"		130.0
34-1/4"		130.0
40-1/4"		126.0
46-1/4"		118.8
22-1/4"	98-1/2"	130.0
28-1/4"		130.0
34-1/4"		130.0
40-1/4"		118.3
22-1/4"	104-1/2"	130.0
28-1/4"		130.0
34-1/4"		130.0
40-1/4"		112.1
22-1/4"	110-1/2"	130.0
28-1/4"		130.0
34-1/4"		130.0
22-1/4"	116-1/2"	130.0
28-1/4"		130.0
34-1/4"		130.0

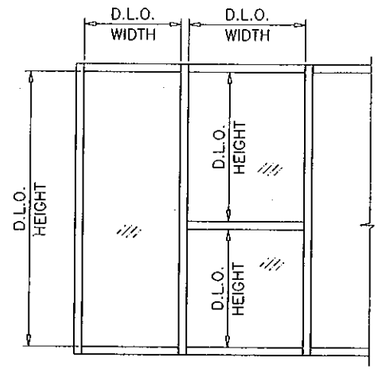

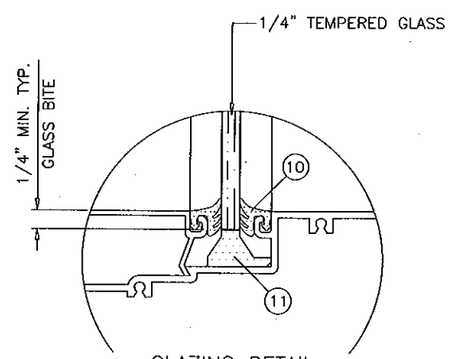

GLAZING DETAIL

NOTE:
GLASS CAPACITIES ON THIS SHEET ARE BASED ON ASTM E1300-04 (3 SEC. GUSTS).

STEP 2: GLASS LOAD CAPACITY

Trulite
GLASS & ALUMINUM SOLUTIONS™
http://www.trulite.com
800 FAIRWAY DRIVE, Suite 200
DEERFIELD BEACH, FL 33441
p. 800-432-8132 | f. 954-724-2083

PRODUCT:

Resistor
Series 4500 / 450EZ
STOREFRONT WALL
NON - IMPACT

Resistor
PRODUCT SERIES

REVN	DATE/REMARKS

ENGINEER:
MCY ENGINEERING, INC.
GLAZING CONSULTANT
8501 SW 124th Ave. Suite 205A
MIAMI, FL 33183
P: 305-271-0117
Email: MCY.Engineering@att.net
www.MCYEngineering.com

STAMP:
PIPING WANG, P.E.
FLORIDA REGISTRATION
PE #55983
C.A.N. 28677
No 55983
STATE OF FLORIDA
PROFESSIONAL ENGINEER
APR 16 2012

PRODUCT CONTROL APPROVAL:

PRODUCT REVISED
as complying with the Florida
Building Code
Acceptance No 11-120707
Expiration Date 03/19/2016
By
Miami Dade Product Control

DRAWN: S.L.	DRAWING No:
DATE: 10-11-11	2 OF 11
DWG: AD11-27	

MULLION LOAD CAPACITY – PSF
WITHOUT INTERMEDIATE HORIZONTALS

NOMINAL DIMS.		JAMB	MULLION W/O REINF.	MULLION WITH REINF.
WIDTH (W)	FRAME HEIGHT	EXT.(+)/INT.(–)	EXT.(+)/INT.(–)	EXT.(+)/INT.(–)
24"	60"	130.0	130.0	130.0
30"		130.0	130.0	130.0
36"		128.0	128.0	130.0
42"		109.7	109.7	126.6
48"		96.0	96.0	120.0
54"		85.3	85.3	116.4
60"		76.8	76.8	115.2
66"		69.8	69.8	115.2
72"		64.0	64.0	115.2
24"	66"	130.0	130.0	130.0
30"		130.0	130.0	130.0
36"		116.4	116.4	120.0
42"		99.7	99.7	109.7
48"		87.3	87.3	102.9
54"		77.6	77.6	98.5
60"		69.8	69.8	96.0
66"		63.5	63.5	95.2
24"	72"	130.0	130.0	130.0
30"		128.0	128.0	121.3
36"		106.7	106.7	106.7
42"		91.4	91.4	96.8
48"		80.0	80.0	90.0
54"		71.1	71.1	85.3
24"	78"	130.0	130.0	130.0
30"		118.2	118.2	109.7
36"		98.5	98.5	96.0
42"		84.4	84.4	86.6
48"		73.8	73.8	80.0
54"		65.6	65.6	75.3
24"	84"	130.0	125.2	120.0
30"		109.7	101.7	100.2
36"		91.4	86.4	87.3
42"		78.4	75.8	78.4
48"		68.6	68.2	72.0
54"		61.0	61.0	67.4
24"	90"	128.0	107.7	110.8
30"		102.4	87.3	92.2
36"		85.3	74.0	80.0
42"		73.1	64.7	71.6
48"		64.0	58.0	65.5
24"	96"	120.0	89.3	102.9
30"		96.0	72.4	85.3
36"		80.0	61.4	73.8
42"		68.6	53.8	65.8
48"		60.0	48.3	60.0

MULLION LOAD CAPACITY – PSF
WITHOUT INTERMEDIATE HORIZONTALS

NOMINAL DIMS.		JAMB	MULLION W/O REINF.	MULLION WITH REINF.
WIDTH (W)	FRAME HEIGHT	EXT.(+)/INT.(–)	EXT.(+)/INT.(–)	EXT.(+)/INT.(–)
24"	102"	112.9	74.2	92.3
30"		90.4	60.1	74.7
36"		75.3	50.9	63.3
42"		64.5	44.4	55.2
24"	108"	106.7	62.4	77.5
30"		85.3	50.5	62.7
36"		71.1	42.6	53.0
42"		61.0	37.2	46.2
24"	114"	101.1	52.9	65.8
30"		80.8	42.8	53.2
36"		67.4	36.1	44.8
24"	120"	89.5	45.3	56.3
30"		72.2	36.6	45.5
36"		60.8	30.8	38.3

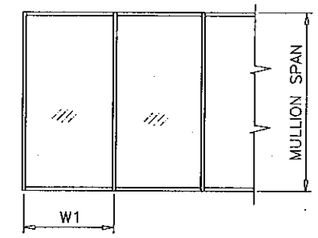

WIDTH (W) = W1
AT FRAME JAMB

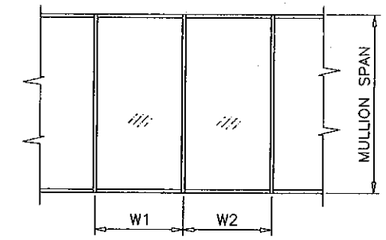

WIDTH (W) = $\frac{W1 + W2}{2}$
AT FRAME MULLION

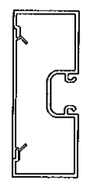

JAMB

Ix IN^4	Sx IN^3
2.9777	1.3234

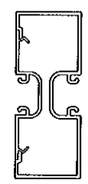

MULLION W/O REINF.

Ix IN^4	Sx IN^3
3.0162	1.3405

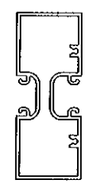

MULLION W/O REINF.

Ix IN^4	Sx IN^3
2.9066	1.2918

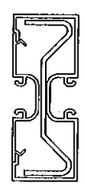

MULLION WITH REINF.

	Ix IN^4	Sx IN^3
ALUMINUM	3.0162	1.3405
STEEL	1.8859	.9008
TOTAL Ix ALUM + STL X 2.9	8.4853	

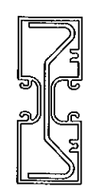

MULLION WITH REINF.

	Ix IN^4	Sx IN^3
ALUMINUM	2.9066	1.2918
STEEL	1.8859	.9008
TOTAL Ix ALUM + STL X 2.9	8.3757	

STEP 3: MULLION LOAD CAPACITY

Trulite
GLASS & ALUMINUM SOLUTIONS™
http://www.trulite.com
800 FAIRWAY DRIVE, Suite 200
DEERFIELD BEACH, FL 33441
p. 800-432-8132 | f. 954-724-2083

PRODUCT:

Resistor
Series 4500 / 450EZ
STOREFRONT WALL
NON - IMPACT

Resistor PRODUCT SERIES

REVN	DATE/REMARKS

ENGINEER:
MCY ENGINEERING, INC.
GLAZING CONSULTANT
8501 SW 124th Ave. Suite 205A
MIAMI, FL 33183
P: 305-271-0117
Email: MCY.Engineering@att.net
www.MCYEngineering.com

STAMP:
YIPING WANG, P.E.
FLORIDA REGISTRATION
LICENSE #55983
C.A.N. 28637
STATE OF FLORIDA
PROFESSIONAL ENGINEER
APR 16 2012

PRODUCT CONTROL APPROVAL:

PRODUCT REVISED
as complying with the Florida
Building Code
Acceptance No 11-1207.07
Expiration Date 03/19/2016
By
Miami-Dade Product Control

DRAWN: S.L.	DRAWING No:
DATE: 10--11-11	3 OF 11
DWG: AD11-27	

MULLION LOAD CAPACITY – PSF
WITH INTERMEDIATE HORIZONTALS

NOMINAL DIMS.		JAMB	MULLION W/O REINF.	MULLION WITH REINF.
WIDTH (W)	FRAME HEIGHT	EXT.(+)/INT.(–)	EXT.(+)/INT.(–)	EXT.(+)/INT.(–)
24"	60"	130.0	130.0	130.0
30"		130.0	130.0	130.0
36"		128.0	128.0	128.0
42"		109.7	109.7	109.7
48"		96.0	96.0	96.0
54"		85.3	85.3	85.3
60"		76.8	76.8	76.8
66"		69.8	69.8	69.8
72"		64.0	64.0	64.0
24"	66"	130.0	130.0	130.0
30"		130.0	130.0	130.0
36"		116.4	116.4	116.4
42"		99.7	99.7	99.7
48"		87.3	87.3	87.3
54"		77.6	77.6	77.6
60"		69.8	69.8	69.8
66"		63.5	63.5	63.5
24"	72"	130.0	130.0	130.0
30"		128.0	128.0	128.0
36"		106.7	106.7	106.7
42"		91.4	91.4	91.4
48"		80.0	80.0	80.0
54"		71.1	71.1	71.1
60"		64.0	64.0	64.0
24"	78"	130.0	130.0	130.0
30"		118.2	118.2	118.2
36"		98.5	98.5	98.5
42"		84.4	84.4	84.4
48"		73.8	73.8	73.8
54"		65.6	65.6	65.6
24"	84"	130.0	126.3	130.0
30"		109.7	101.0	109.7
36"		91.4	84.2	91.4
42"		78.4	72.2	78.4
48"		68.6	63.1	68.6
54"		61.0	56.1	61.0
24"	90"	128.0	105.8	128.0
30"		102.4	84.7	102.4
36"		85.3	70.6	85.3
42"		73.1	60.5	73.1
48"		64.0	52.9	64.0
24"	96"	120.0	87.3	120.0
30"		96.0	69.8	96.0
36"		80.0	58.2	80.0
42"		68.6	49.9	68.6
48"		60.0	43.6	60.0

MULLION LOAD CAPACITY – PSF
WITH INTERMEDIATE HORIZONTALS

NOMINAL DIMS.		JAMB	MULLION W/O REINF.	MULLION WITH REINF.
WIDTH (W)	FRAME HEIGHT	EXT.(+)/INT.(–)	EXT.(+)/INT.(–)	EXT.(+)/INT.(–)
24"	102"	112.9	72.8	100.0
30"		90.4	58.2	80.0
36"		75.3	48.5	66.7
42"		64.5	41.6	57.2
24"	108"	106.7	61.3	84.3
30"		85.3	49.0	67.4
36"		71.1	40.9	56.2
42"		61.0	35.0	48.2
24"	114"	101.1	52.1	71.7
30"		80.8	41.7	57.3
36"		67.4	34.7	47.8
24"	120"	88.2	44.7	61.4
30"		70.6	35.7	49.2
36"		58.8	29.8	41.0

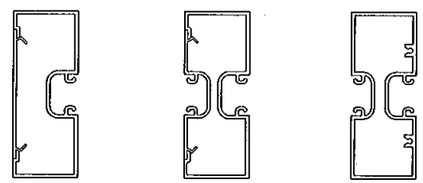

JAMB

Ix IN^4	Sx IN^3
2.9777	1.3234

MULLION W/O REINF.

Ix IN^4	Sx IN^3
3.0162	1.3405

MULLION W/O REINF.

Ix IN^4	Sx IN^3
2.9066	1.2918

MULLION WITH REINF.

	Ix IN^4	Sx IN^3
ALUMINUM	3.0162	1.3405
STEEL	1.8859	.9008
TOTAL Ix ALUM + STL X 2.9	8.4853	

MULLION WITH REINF.

	Ix IN^4	Sx IN^3
ALUMINUM	2.9066	1.2918
STEEL	1.8859	.9008
TOTAL Ix ALUM + STL X 2.9	8.3757	

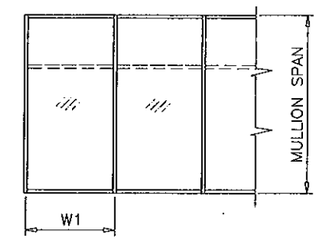

WIDTH (W) = W1
AT FRAME JAMB

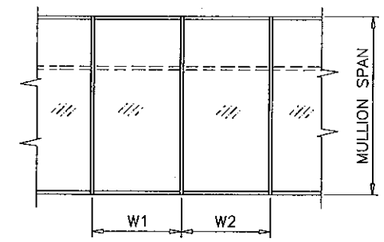

WIDTH (W) = $\frac{W1 + W2}{2}$
AT FRAME MULLION

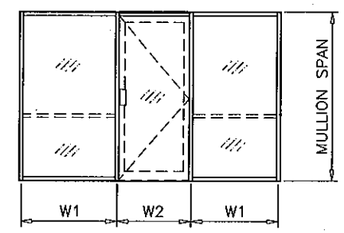

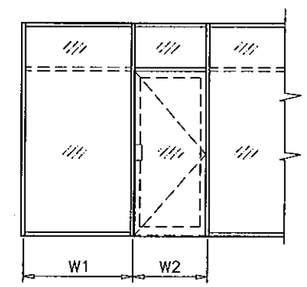

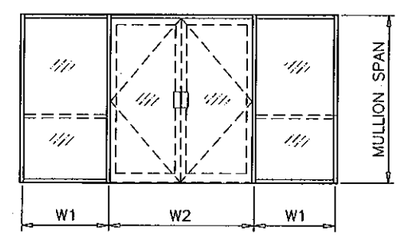

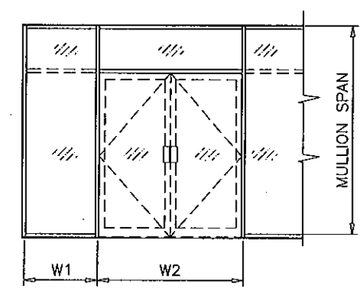

WIDTH (W) = $\frac{W1 + W2}{2}$

STEP 3: MULLION LOAD CAPACITY

Trulite
GLASS & ALUMINUM SOLUTIONS™
http://www.trulite.com
800 FAIRWAY DRIVE, Suite 200
DEERFIELD BEACH, FL 33441
p. 800-432-8132 | f. 954-724-2083

PRODUCT:

Resistor
Series 4500 / 450EZ
STOREFRONT WALL
NON - IMPACT

Resistor PRODUCT SERIES

REVN	DATE/REMARKS

ENGINEER:
MCY ENGINEERING, INC.
GLAZING CONSULTANT
8501 SW 124th Ave. Suite 205A
MIAMI, FL 33183
P: 305-271-0117
Email: MCY.Engineering@att.net
www.MCYEngineering.com

STAMP:

YIPING WANG
FLORIDA REGISTRATION
P.E. 55983
C.A.N. 28677
No 55983
STATE OF FLORIDA
PROFESSIONAL ENGINEER
APR 16 2012
SIGNATURE

PRODUCT CONTROL APPROVAL:

PRODUCT REVISED
as complying with the Florida
Building Code
Acceptance No 11-1207.07
Expiration Date 03/19/2016
By
Miami Dade Product Control

DRAWN: S.L.	DRAWING No:
DATE: 10–11–11	4 OF 11
DWG: AD11–27	

ANCHOR LOAD CAPACITY - PSF
WITHOUT INTERMEDIATE HORIZONTALS
EXT.(+) & INT.(-)

NOMINAL DIMS.		ANCHORS TYPE 'A'			ANCHOR TYPES 'B' & 'C'	
WIDTH (W)	FRAME HEIGHT	A1	A2	A3	B1/C1	B2/C2
24"	60"	113.5	130.0	130.0	130.0	130.0
30"		96.9	130.0	130.0	130.0	130.0
36"		86.5	130.0	130.0	130.0	130.0
42"		79.8	130.0	130.0	126.6	130.0
48"		75.7	130.0	130.0	120.0	130.0
54"		73.4	130.0	130.0	116.4	130.0
60"		72.6	130.0	130.0	115.2	130.0
66"		72.6	130.0	130.0	115.2	130.0
72"		72.6	130.0	130.0	115.2	130.0
24"	66"	100.9	130.0	130.0	130.0	130.0
30"		85.5	130.0	130.0	130.0	130.0
36"		75.7	130.0	130.0	120.0	130.0
42"		69.2	130.0	130.0	109.7	130.0
48"		64.9	129.7	130.0	102.9	130.0
54"		62.1	124.2	130.0	98.5	130.0
60"		60.5	121.1	130.0	96.0	130.0
66"		60.0	120.1	130.0	95.2	130.0
24"	72"	90.8	130.0	130.0	130.0	130.0
30"		76.5	130.0	130.0	121.3	130.0
36"		67.3	130.0	130.0	106.7	130.0
42"		61.0	122.1	130.0	96.8	130.0
48"		56.8	113.5	130.0	90.0	130.0
54"		53.8	107.6	130.0	85.3	130.0
60"		51.9	103.8	130.0	82.3	130.0
24"	78"	82.5	130.0	130.0	130.0	130.0
30"		69.2	130.0	130.0	109.7	130.0
36"		60.5	121.1	130.0	96.0	130.0
42"		54.6	109.2	130.0	86.6	130.0
48"		50.4	100.9	130.0	80.0	130.0
54"		47.5	95.0	130.0	75.3	130.0
24"	84"	75.7	130.0	130.0	120.0	130.0
30"		63.2	126.3	130.0	100.2	130.0
36"		55.0	110.1	130.0	87.3	130.0
42"		49.4	98.8	130.0	78.4	130.0
48"		45.4	90.8	130.0	72.0	130.0
54"		42.5	85.0	127.4	67.4	130.0
24"	90"	69.8	130.0	130.0	110.8	130.0
30"		58.1	116.2	130.0	92.2	130.0
36"		50.4	100.9	130.0	80.0	130.0
42"		45.1	90.2	130.0	71.6	130.0
48"		41.3	82.5	123.8	65.5	130.0
24"	96"	64.9	129.7	130.0	102.9	130.0
30"		53.8	107.6	130.0	85.3	130.0
36"		46.6	93.1	130.0	73.8	130.0
42"		41.5	83.0	124.5	65.8	130.0
48"		37.8	75.7	113.5	60.0	120.0

ANCHOR LOAD CAPACITY - PSF
WITHOUT INTERMEDIATE HORIZONTALS
EXT.(+) & INT.(-)

NOMINAL DIMS.		ANCHORS TYPE 'A'			ANCHOR TYPES 'B' & 'C'	
WIDTH (W)	FRAME HEIGHT	A1	A2	A3	B1/C1	B2/C2
24"	102"	60.5	121.1	130.0	96.0	130.0
30"		50.1	100.2	130.0	79.4	130.0
36"		43.2	86.5	129.7	68.6	130.0
42"		38.4	76.9	115.3	61.0	121.9
24"	108"	56.8	113.5	130.0	90.0	130.0
30"		46.9	93.7	130.0	74.3	130.0
36"		40.4	80.7	121.1	64.0	128.0
42"		35.8	71.6	107.3	56.7	113.5
24"	114"	53.4	106.8	130.0	84.7	130.0
30"		44.0	88.0	130.0	69.8	130.0
36"		37.8	75.7	113.5	60.0	120.0
24"	120"	50.4	100.9	130.0	80.0	130.0
30"		41.5	83.0	124.5	65.8	130.0
36"		35.6	71.2	106.8	56.5	112.9

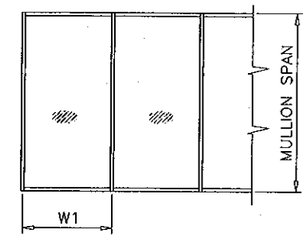

WIDTH (W) = W1
AT FRAME JAMB

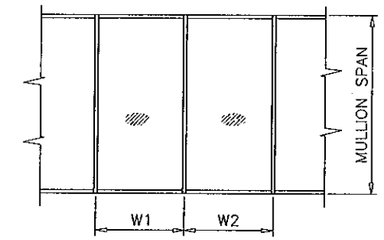

WIDTH (W) = $\frac{W1 + W2}{2}$
AT FRAME MULLION

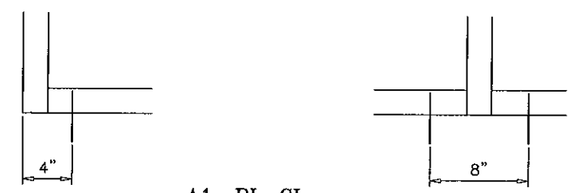

A1, BI, CI

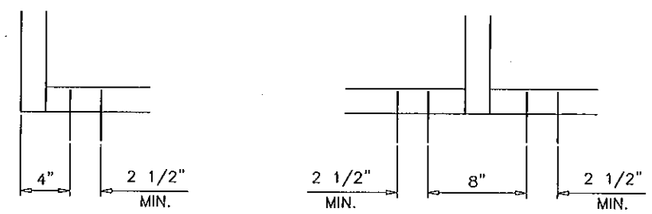

A2, B2, C2

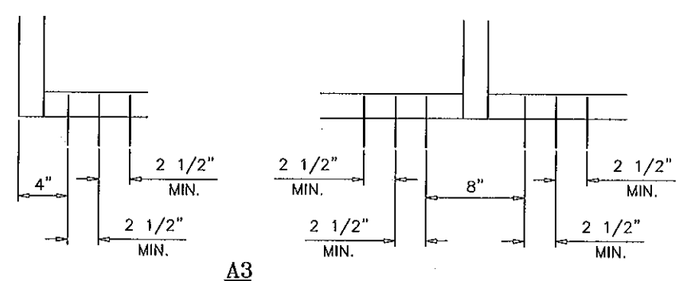

A3

ANCHORS TYPES: SEE SHEET 7 FOR DESCRIPTION

A1 = (1) ANCHORS TYPE 'A' AT EACH SIDE OF JAMB OR MULLION
A2 = (2) ANCHORS TYPE 'A' AT EACH SIDE OF JAMB OR MULLION

B1 = (1) ANCHORS TYPE 'B' AT EACH SIDE OF JAMB OR MULLION
B2 = (2) ANCHORS TYPE 'B' AT EACH SIDE OF JAMB OR MULLION

C1 = (1) ANCHORS TYPE 'C' AT EACH SIDE OF JAMB OR MULLION
C2 = (2) ANCHORS TYPE 'C' AT EACH SIDE OF JAMB OR MULLION

A3 = (3) ANCHORS TYPE 'A' AT EACH SIDE OF JAMB OR MULLION

ALL OTHER ANCHORS TO BE SPACED AS PER ELEVATION.

STEP 4: ANCHOR LOAD CAPACITY

Trulite
GLASS & ALUMINUM SOLUTIONS™
http://www.trulite.com
800 FAIRWAY DRIVE, Suite 200
DEERFIELD BEACH, FL 33441
p. 800-432-8132 | f. 954-724-2083

PRODUCT:

Resistor
Series 4500 / 450EZ
STOREFRONT WALL
NON - IMPACT

Resistor
PRODUCT SERIES

REVN	DATE/REMARKS

ENGINEER:
MCY ENGINEERING, INC.
GLAZING CONSULTANT
8501 SW 124th Ave, Suite 205A
MIAMI, FL 33183
P: 305-271-0117
Email: MCY.Engineering@att.net
www.MCYEngineering.com

STAMP:
YIPING WANG
YIPING WANG, P.E.
FLORIDA REGISTRATION
PE #55983
C.A.N. 26783
STATE OF FLORIDA
PROFESSIONAL ENGINEER
APR 19 2012

PRODUCT CONTROL APPROVAL:

PRODUCT REVISED
as complying with the Florida
Building Code
Acceptance No 11-1207.07
Expiration Date 03/19/2016
By
Miami Dade Product Control

DRAWN: S.L.	DRAWING No:
DATE: 10-11-11	5 OF 11
DWG: AD11-27	

ANCHOR LOAD CAPACITY – PSF WITH INTERMEDIATE HORIZONTALS EXT.(+) & INT.(–)						
NOMINAL DIMS.		ANCHORS TYPE 'A'			ANCHOR TYPES 'B' & 'C'	
WIDTH (W)	FRAME HEIGHT	A1	A2	A3	B1/C1	B2/C2
24"	60"	90.8	130.0	130.0	130.0	130.0
30"		72.6	130.0	130.0	115.2	130.0
36"		60.5	121.1	130.0	96.0	130.0
42"		51.9	103.8	130.0	82.3	130.0
48"		45.4	90.8	130.0	72.0	130.0
54"		40.4	80.7	121.1	64.0	128.0
60"		36.3	72.6	109.0	57.6	115.2
66"		33.0	66.0	99.1	52.4	104.7
72"		30.3	60.5	90.8	48.0	96.0
24"	66"	82.5	130.0	130.0	130.0	130.0
30"		66.0	130.0	130.0	104.7	130.0
36"		55.0	110.1	130.0	87.3	130.0
42"		47.2	94.3	130.0	74.8	130.0
48"		41.3	82.5	123.8	65.5	130.0
54"		36.7	73.4	110.1	58.2	116.4
60"		33.0	66.0	99.1	52.4	104.7
66"		30.0	60.0	90.0	47.6	95.2
24"	72"	75.7	130.0	130.0	120.0	130.0
30"		60.5	121.1	130.0	96.0	130.0
36"		50.4	100.9	130.0	80.0	130.0
42"		43.2	86.5	129.7	68.6	130.0
48"		37.8	75.7	113.5	60.0	120.0
54"		33.6	67.3	100.9	53.3	106.7
60"		30.3	60.5	90.8	48.0	96.0
24"	78"	69.8	130.0	130.0	110.8	130.0
30"		55.9	111.8	130.0	88.6	130.0
36"		46.6	93.1	130.0	73.8	130.0
42"		39.9	79.8	119.7	63.3	126.6
48"		34.9	69.8	104.8	55.4	110.8
54"		31.0	62.1	93.1	49.2	98.5
24"	84"	64.9	129.7	130.0	102.9	130.0
30"		51.9	103.8	130.0	82.3	130.0
36"		43.2	86.5	129.7	68.6	130.0
42"		37.1	74.1	111.2	58.8	117.6
48"		32.4	64.9	97.3	51.4	102.9
54"		28.8	57.7	86.5	45.7	91.4
24"	90"	60.5	121.1	130.0	96.0	130.0
30"		48.4	96.9	130.0	76.8	130.0
36"		40.4	80.7	121.1	64.0	128.0
42"		34.6	69.2	103.8	54.9	109.7
48"		30.3	60.5	90.8	48.0	96.0
24"	96"	56.8	113.5	130.0	90.0	130.0
30"		45.4	90.8	130.0	72.0	130.0
36"		37.8	75.7	113.5	60.0	120.0
42"		32.4	64.9	97.3	51.4	102.9
48"		28.4	56.8	85.1	45.0	90.0

ANCHOR LOAD CAPACITY – PSF WITH INTERMEDIATE HORIZONTALS EXT.(+) & INT.(–)						
NOMINAL DIMS.		ANCHORS TYPE 'A'			ANCHOR TYPES 'B' & 'C'	
WIDTH (W)	FRAME HEIGHT	A1	A2	A3	B1/C1	B2/C2
24"	102"	53.4	106.8	130.0	84.7	130.0
30"		42.7	85.5	128.2	67.8	130.0
36"		35.6	71.2	106.8	56.5	112.9
42"		30.5	61.0	91.6	48.4	96.8
24"	108"	50.4	100.9	130.0	80.0	130.0
30"		40.4	80.7	121.1	64.0	128.0
36"		33.6	67.3	100.9	53.3	106.7
42"		28.8	57.7	86.5	45.7	91.4
24"	114"	47.8	95.6	130.0	75.8	130.0
30"		38.2	76.5	114.7	60.6	121.3
36"		31.9	63.7	95.6	50.5	101.1
24"	120"	45.4	90.8	130.0	72.0	130.0
30"		36.3	72.6	109.0	57.6	115.2
36"		30.3	60.5	90.8	48.0	96.0

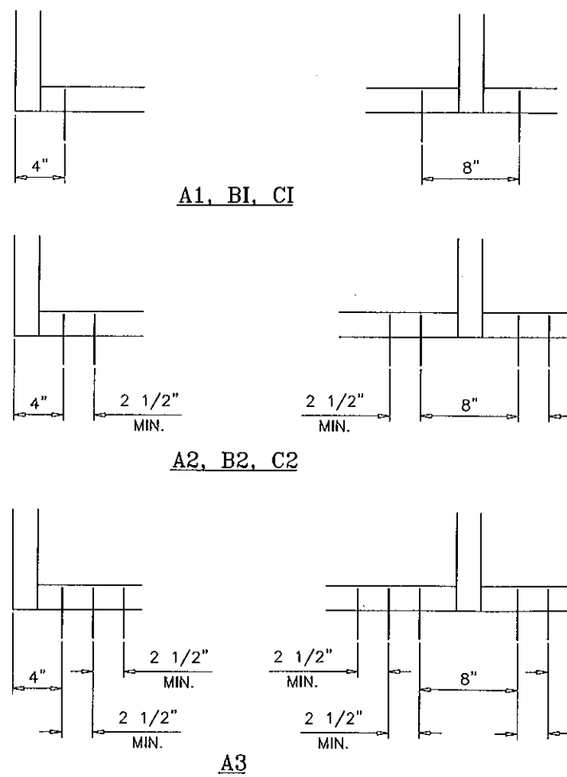

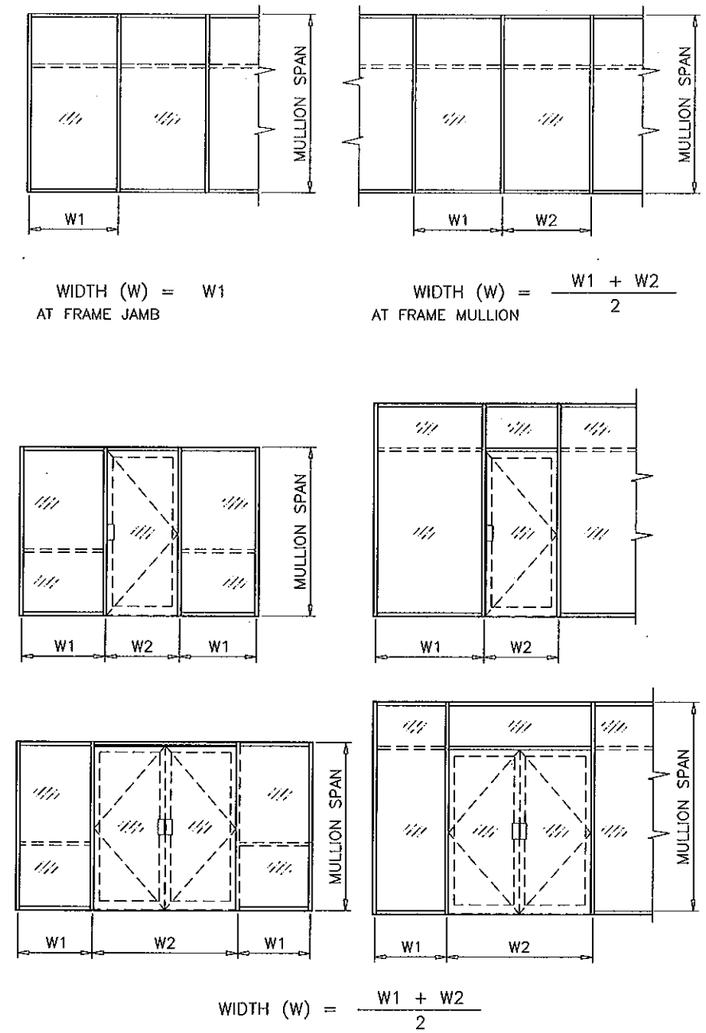

WIDTH (W) = W1
AT FRAME JAMB

WIDTH (W) = $\frac{W1 + W2}{2}$
AT FRAME MULLION

WIDTH (W) = $\frac{W1 + W2}{2}$

ANCHORS TYPES: SEE SHEET 7 FOR DESCRIPTION

A1 = (1) ANCHORS TYPE 'A' AT EACH SIDE OF JAMB OR MULLION
A2 = (2) ANCHORS TYPE 'A' AT EACH SIDE OF JAMB OR MULLION

B1 = (1) ANCHORS TYPE 'B' AT EACH SIDE OF JAMB OR MULLION
B2 = (2) ANCHORS TYPE 'B' AT EACH SIDE OF JAMB OR MULLION

C1 = (1) ANCHORS TYPE 'C' AT EACH SIDE OF JAMB OR MULLION
C2 = (2) ANCHORS TYPE 'C' AT EACH SIDE OF JAMB OR MULLION

A3 = (3) ANCHORS TYPE 'A' AT EACH SIDE OF JAMB OR MULLION

ALL OTHER ANCHORS TO BE SPACED AS PER ELEVATION.

STEP 4: ANCHOR LOAD CAPACITY

Trulite
GLASS & ALUMINUM SOLUTIONS™
http://www.trulite.com
800 FAIRWAY DRIVE, Suite 200
DEERFIELD BEACH, FL 33441
p. 800-432-8132 | f. 954-724-2083

PRODUCT:

Resistor
Series 4500 / 450EZ
STOREFRONT WALL
NON - IMPACT

Resistor
PRODUCT SERIES

REVN	DATE/REMARKS

ENGINEER:
MCY ENGINEERING, INC.
GLAZING CONSULTANT
8501 SW 124th Ave. Suite 205A
MIAMI, FL 33183
P: 305-271-0117
Email: MCY.Engineering@att.net
www.MCYEngineering.com

STAMP:
YIRING WANG
YIRING WANG, P.E.
FLORIDA REGISTRATION
PE #55983
C.A.N. 26933
No 55983
STATE OF FLORIDA
PROFESSIONAL ENGINEER
APR 5 2012

PRODUCT CONTROL APPROVAL:

PRODUCT REVISED
as complying with the Florida
Building Code
Acceptance No 11-1207.07
Expiration Date 03/19/2016
By
Miami Dade Product Control

DRAWN: S.L.	DRAWING No:
DATE: 10-11-11	6 OF 11
DWG: AD11-27	

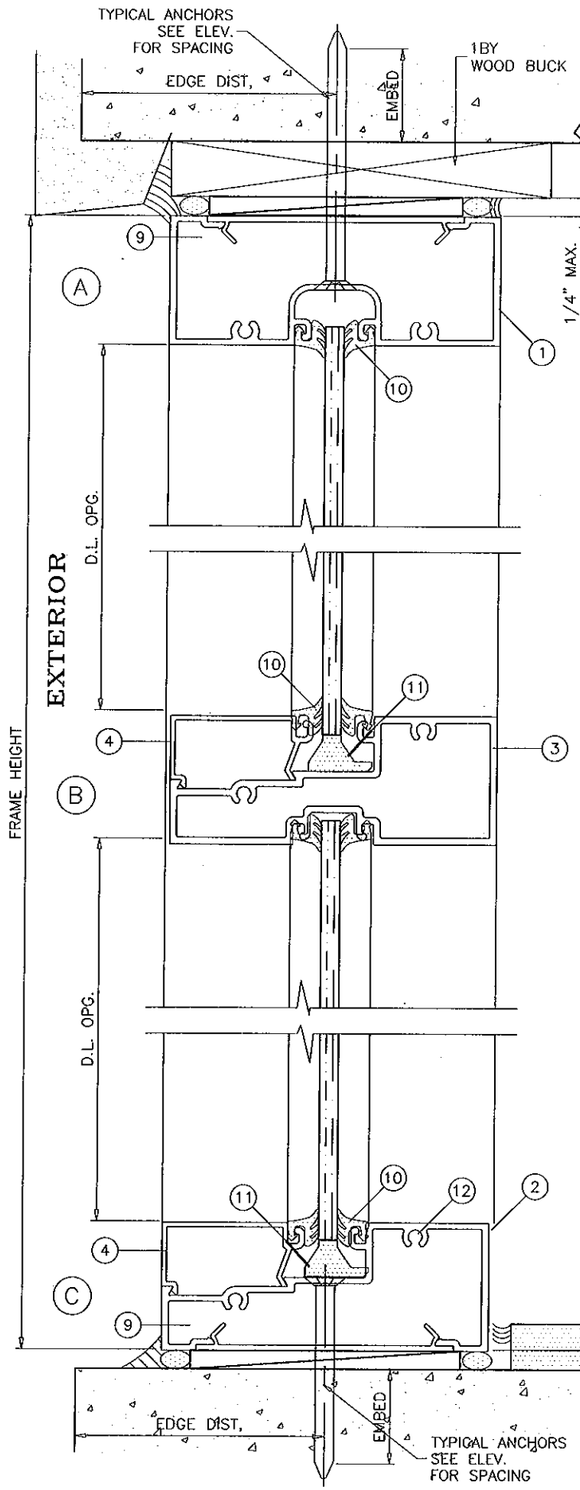

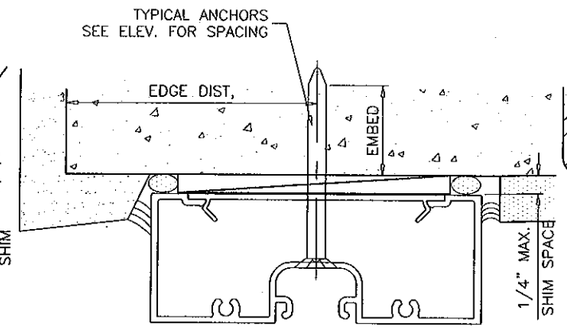

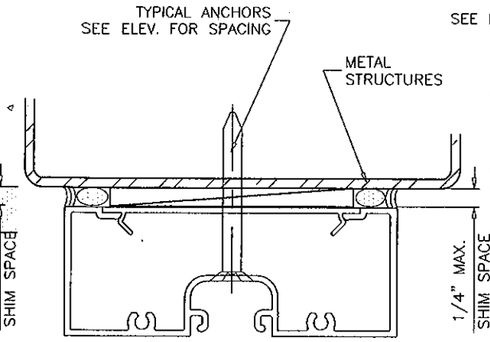

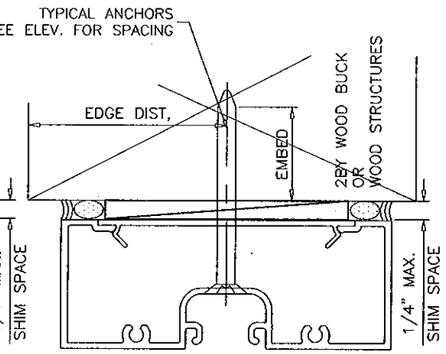

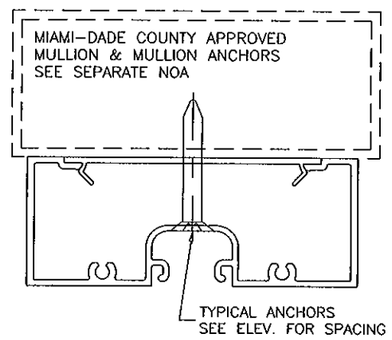

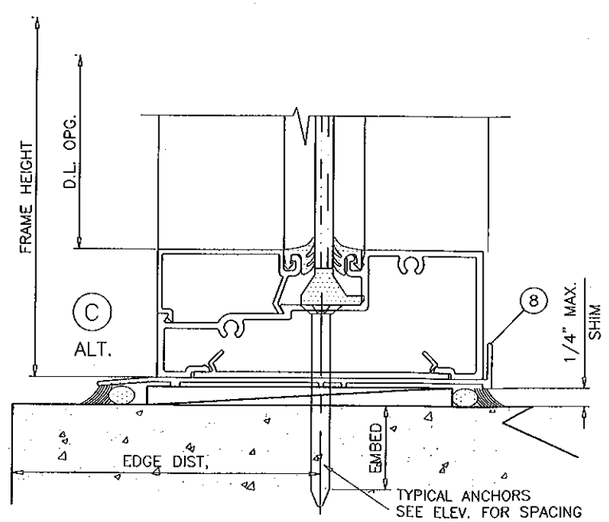

WOOD BUCKS AND METAL STRUCTURES NOT BY TRULITE. MUST SUPPORT LOADS IMPOSED BY GLAZING SYSTEM AND TRANSFER THEM TO THE BUILDING STRUCTURE.

TYPICAL ANCHORS: SEE ELEV. FOR SPACING

TYPE 'A'– 1/4" DIA. ULTRACON BY 'ELCO' (Fu=177 KSI, Fy=155 KSI)
INTO 2BY WOOD BUCKS OR WOOD STRUCTURES
1–3/8" MIN. PENETRATION INTO WOOD

THRU 1BY BUCKS INTO CONC. OR MASONRY
1–1/4" MIN. EMBED INTO CONC. OR MASONRY

TYPE 'B'– 1/4" DIA. ULTRACON BY 'ELCO' (Fu=177 KSI, Fy=155 KSI)
DIRECTLY INTO CONC. OR MASONRY
1–1/4" MIN. EMBED INTO CONC. OR MASONRY

TYPE 'C'– #14 SMS OR SELF DRILLING SCREWS (GRADE 2 CRS)
INTO MIAMI–DADE COUNTY APPROVED MULLIONS (1/8" THK. MIN.)
INTO METAL STRUCTURES
STEEL : 1/8" THK. MIN. (Fy = 36 KSI MIN.)
ALUMINUM : 1/8" THK. MIN. (6063–T5 MIN.)
(STEEL IN CONTACT WITH ALUMINUM TO BE PLATED OR PAINTED)

TYPICAL EDGE DISTANCE
INTO CONCRETE AND MASONRY = 2–1/2" MIN.
INTO WOOD STRUCTURE = 1" MIN.
INTO METAL STRUCTURE = 3/4" MIN.

CONCRETE AT HEAD, SILL OR JAMBS f'c = 3000 PSI MIN.
C–90 HOLLOW/FILLED BLOCK AT JAMBS f'm = 2000 PSI MIN.

SEALANTS:

GLAZING BEAD TO FRAME, MULLION AND FRAME SEAMS AND ALL FRAME CORNERS SEALED WITH CLEAR/ALUM COLORED SILICONE 'SCHNEE MOREHEAD 5504'.

Trulite
GLASS & ALUMINUM SOLUTIONS™
http://www.trulite.com
800 FAIRWAY DRIVE, Suite 200
DEERFIELD BEACH, FL 33441
p. 800-432-8132 | f. 954-724-2083

PRODUCT:

Resistor
Series 4500 / 450EZ
STOREFRONT WALL
NON - IMPACT

Resistor PRODUCT SERIES

REVN	DATE/REMARKS

ENGINEER:
MCY ENGINEERING, INC.
GLAZING CONSULTANT
8501 SW 124th Ave. Suite 205A
MIAMI, FL 33183
P: 305-271-0117
Email: MCY.Engineering@att.net
www.MCYEngineering.com

STAMP:
YIPING WANG
FLORIDA REGISTRATION
P.E. 55983
C.A.N. 28677
No 55983
STATE OF FLORIDA
PROFESSIONAL ENGINEER
APR 15 2016

PRODUCT CONTROL APPROVAL:

PRODUCT REVISED
as complying with the Florida
Building Code
Acceptance No 11-1207.07
Expiration Date 03/19/2016
By
Miami Dade Product Control

DRAWN: S.L.	DRAWING No:
DATE: 10–11–11	7 OF 11
DWG: AD11–27	

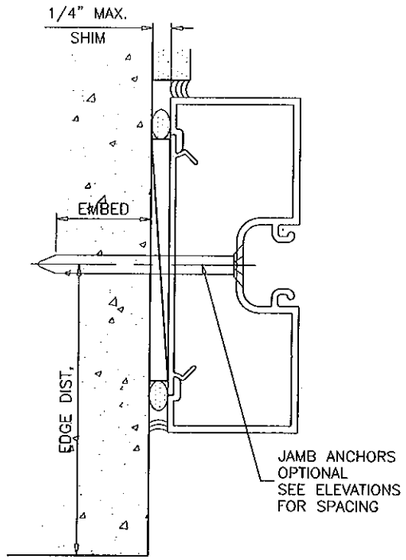

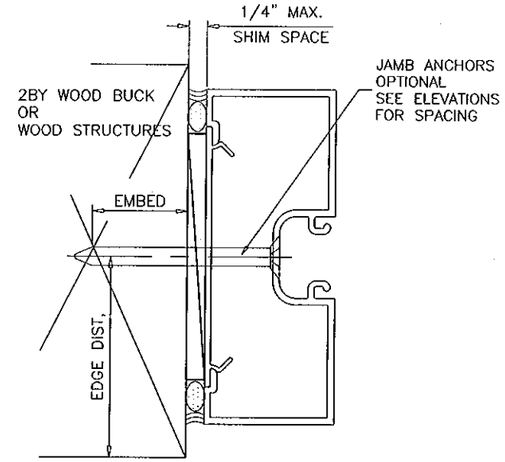

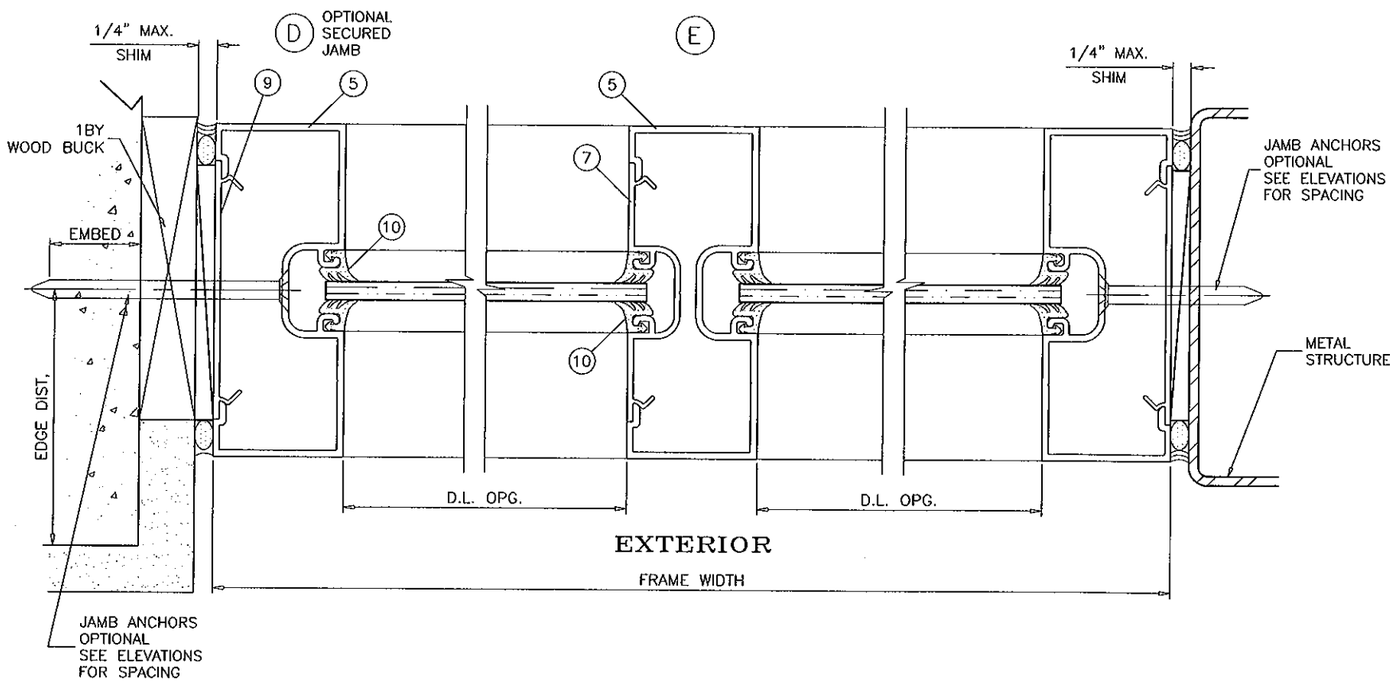

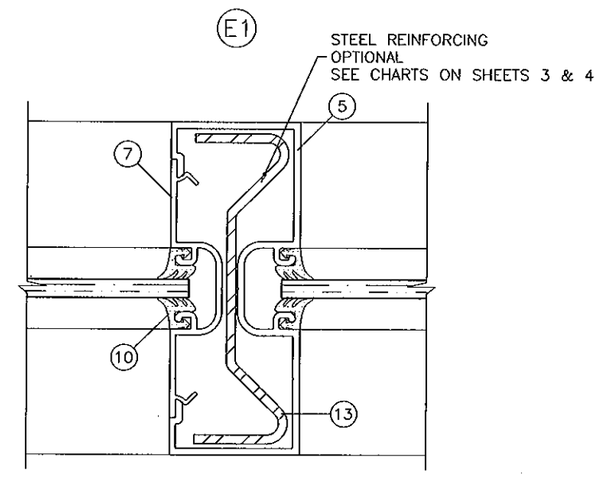

Trulite
GLASS & ALUMINUM SOLUTIONS™

http://www.trulite.com

800 FAIRWAY DRIVE, Suite 200
DEERFIELD BEACH, FL 33441
p. 800-432-8132 | f. 954-724-2083

PRODUCT:

Resistor
Series 4500 / 450EZ
STOREFRONT WALL
NON - IMPACT

Resistor
PRODUCT SERIES

REVN	DATE/REMARKS

ENGINEER:

MCY ENGINEERING, INC.
GLAZING CONSULTANT
8501 SW 124th Ave. Suite 205A
MIAMI, FL 33183
P: 305-271-0117
Email: MCY.Engineering@att.net
www.MCYEngineering.com

STAMP:

YIRING WANG, P.E.
FLORIDA REGISTRATION
PE 55983
C.A.N. 28677
No 55983
STATE OF FLORIDA
PROFESSIONAL ENGINEER
APR 16 2012

PRODUCT CONTROL APPROVAL:

PRODUCT REVISED
as complying with the Florida
Building Code
Acceptance No 11-1207.07
Expiration Date 03/19/2016
By
Miami Dade Product Control

DRAWN: S.L.	DRAWING No:
DATE: 10-11-11	**8 OF 11**
DWG: AD11-27	

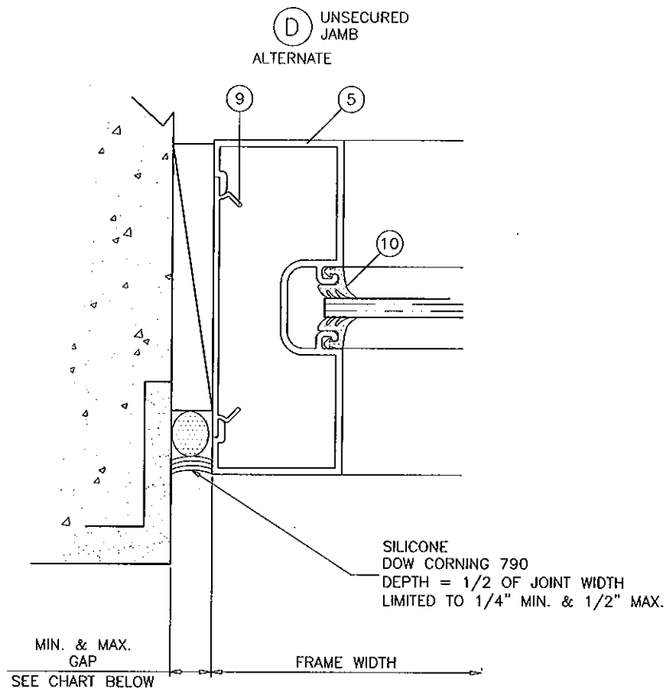

ITEM NO.	PART NUMBER	QUANTITY	DESCRIPTION	MATERIAL	MANF./SUPPLIER/REMARKS
1	4501 (AGA-1060)	AS REQD.	FRAME HEAD	6063-T6	TRULITE
2	4502 (AGA-1061)	AS REQD.	FRAME SILL	6063-T6	TRULITE
3	4504 (AGA-1065)	AS REQD.	FRAME HORIZONTAL	6063-T6	TRULITE
4	4503	AS REQD.	GLAZING STOP	6063-T5	TRULITE
5	4500	AS REQD.	FRAME JAMB/MULLION	6063-T6	TRULITE
6	4505 (AGA-1064)	AS REQD.	CLOSED MULLION	6063-T6	TRULITE
7	4007	AS REQD.	POCKET FILLER	6063-T6	TRULITE
8	–	OPTIONAL	SILL FLASHING	6063-T5	TRULITE
9	4008	AS REQD.	SNAP IN COVER, 2-1/2" LONG	6063-T6	TRULITE
10	RG1/H63	AS REQD.	GLAZING GASKET	EPDM	TRULITE DUROMETER 70 SHORE-A
11	H-62/H-62F	AS REQD.	SETTING BLOCK AT 1/4" POINTS	EPDM	4" LONG DUROMETER 85 SHORE-A
12	#12 X 1-1/4"	2/ CORNER	ASSEMBLY SCREWS PH SMS	STEEL	–
13	–	AS REQD.	OPTIONAL REINFORCING	STEEL	Fy = 36 ksi min.

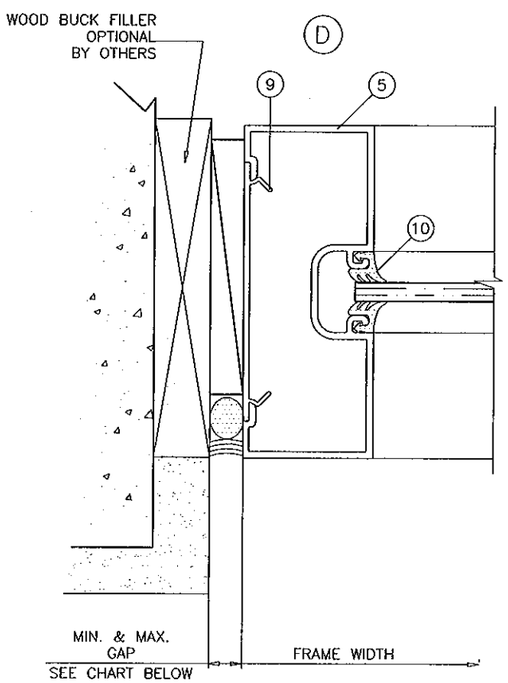

NOTE:

PERIMETER SEALANT SHOULD BE PER MANUFACTURERS RECOMMENDATION (NOT BY TRULITE). RECOMMENDED MIN/MAX. GAP AS PER BELOW TABLE

MAX. FRAME HEIGHT	GAP	
	MIN.	MAX.
84"	1/4"	1"
108"	3/8"	1"
120"	1/2"	1"

MAX. FRAME HEIGHT	MAX GAP AT EACH SIDE
60 FT.	1"

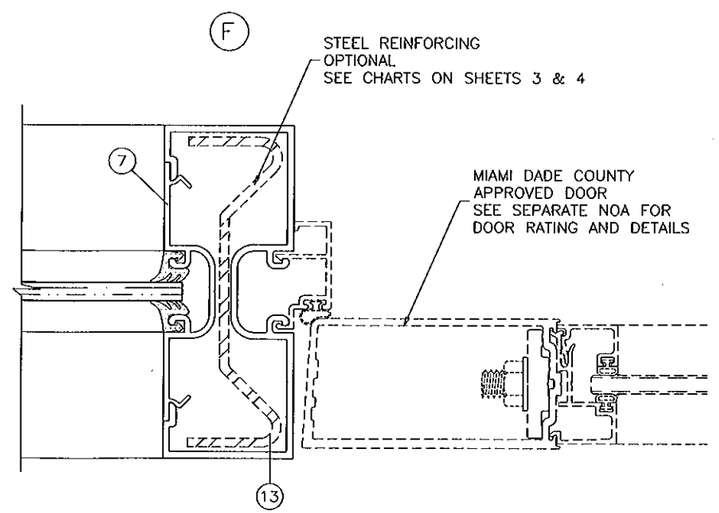

Trulite
GLASS & ALUMINUM SOLUTIONS™
http://www.trulite.com
800 FAIRWAY DRIVE, Suite 200
DEERFIELD BEACH, FL 33441
p. 800-432-8132 | f. 954-724-2083

PRODUCT:

Resistor
Series 4500 / 450EZ
STOREFRONT WALL
NON - IMPACT

Resistor
PRODUCT SERIES

REVN	DATE/REMARKS

ENGINEER:
MCY ENGINEERING, INC.
GLAZING CONSULTANT
8501 SW 124th Ave. Suite 205A
MIAMI, FL 33183
P: 305-271-0117
Email: MCY.Engineering@att.net
www.MCYEngineering.com

STAMP:
YIPING WANG
LICENSED
FLORIDA REGISTRATION
PE #55983
CLAN.528677
STATE OF FLORIDA
PROFESSIONAL ENGINEER
APR 16 2012

PRODUCT CONTROL APPROVAL:

PRODUCT REVISED
as complying with the Florida
Building Code
Acceptance No 11-1207.07
Expiration Date 03/19/2016
By
Miami Dade Product Control

DRAWN: S.L.	DRAWING No:
DATE: 10-11-11	9 OF 11
DWG: AD11-27	

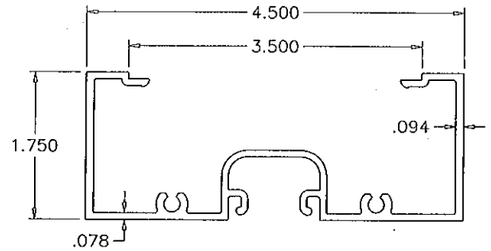

1 FRAME HEAD/MULLION (#12 SCREW)

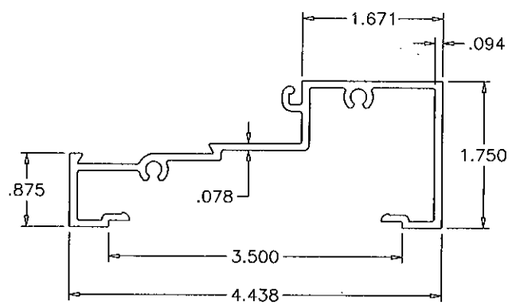

2 FRAME SILL (#12 SCREW)

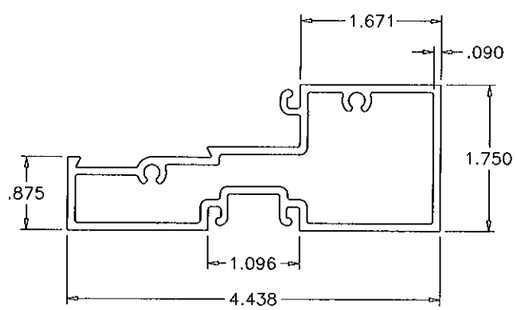

3 FRAME HORIZONTAL (#12 SCREW)

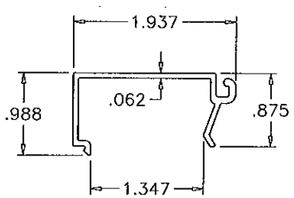

4 GLAZING STOP

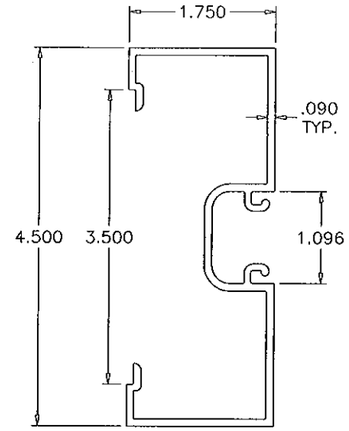

5 FRAME JAMB

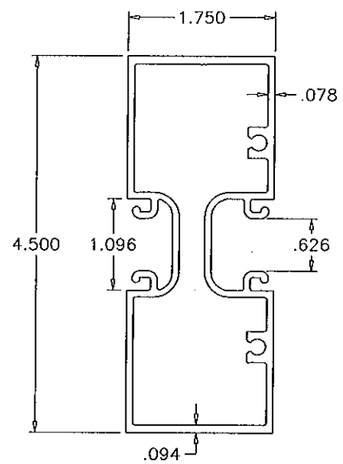

6 MULLION (#12 SCREW)

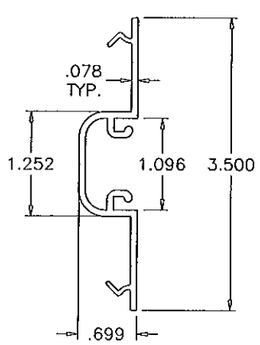

7 POCKET FILLER

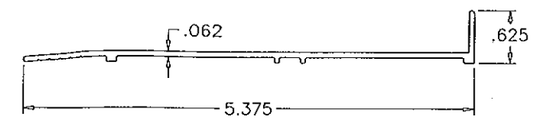

8 SILL FLASHING (OPTIONAL)

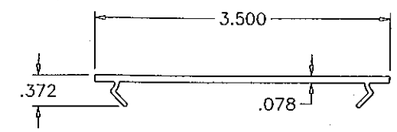

9 SNAP IN COVER

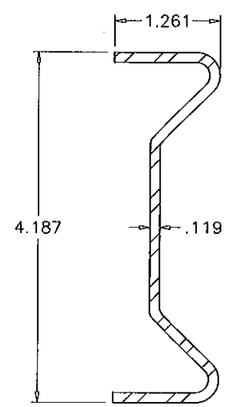

13 STEEL REINFORCING 36 KSI MIN.

Trulite
GLASS & ALUMINUM SOLUTIONS™
http://www.trulite.com
800 FAIRWAY DRIVE, Suite 200
DEERFIELD BEACH, FL 33441
p. 800-432-8132 | f. 954-724-2083

PRODUCT:

Resistor
Series 4500 / 450EZ
STOREFRONT WALL
NON - IMPACT

Resistor PRODUCT SERIES

REVN	DATE/REMARKS

ENGINEER:
MCY ENGINEERING, INC.
GLAZING CONSULTANT
8501 SW 124th Ave. Suite 205A
MIAMI, FL 33183
P: 305-271-0117
Email: MCY.Engineering@att.net
www.MCYEngineering.com

STAMP:

YIPING WANG
FLORIDA REGISTRATION
PE 55983
C.O.A. 28677
No 55983
STATE OF FLORIDA
PROFESSIONAL ENGINEER
APR 16 2012

PRODUCT CONTROL APPROVAL:

PRODUCT REVISED
as complying with the Florida
Building Code
Acceptance No 11-1207.07
Expiration Date ~~03/19~~ 2016
By
Miami Dade Product Control

DRAWN: S.L.	DRAWING No:
DATE: 10-11-11	10 OF 11
DWG: AD11-27	

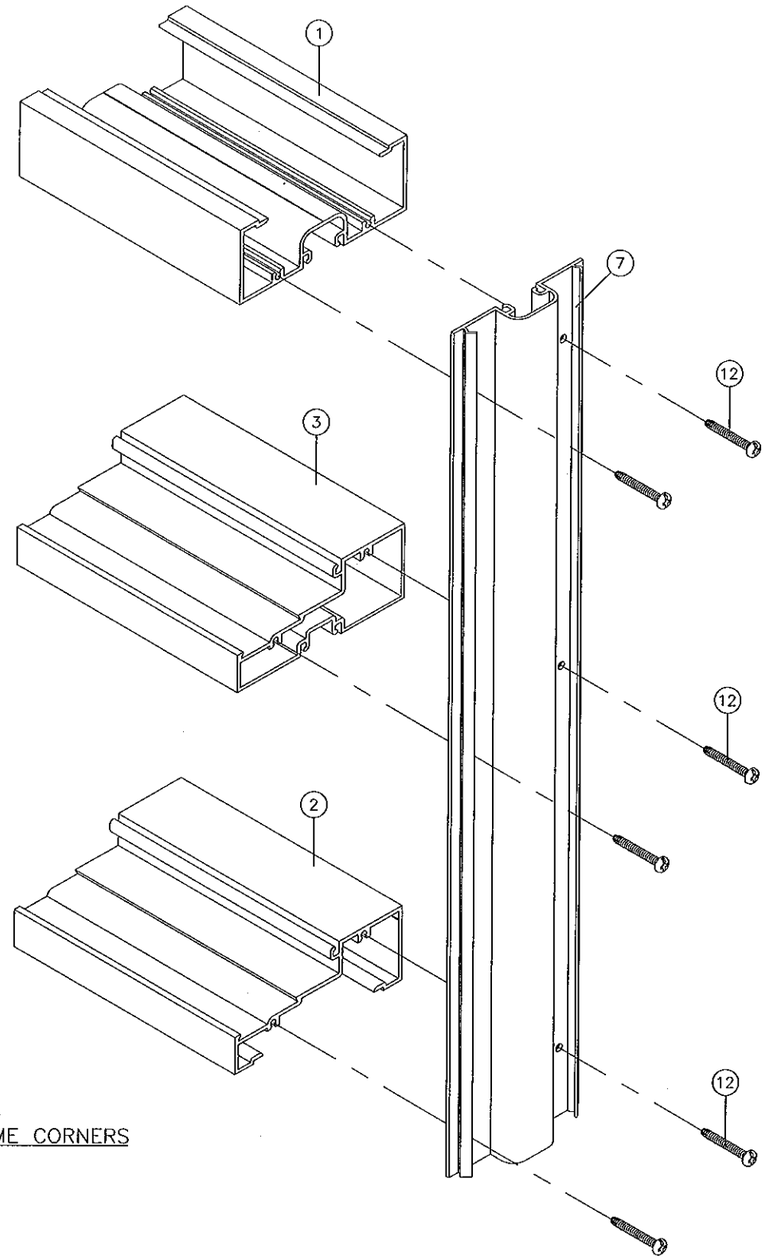

FRAME CORNERS

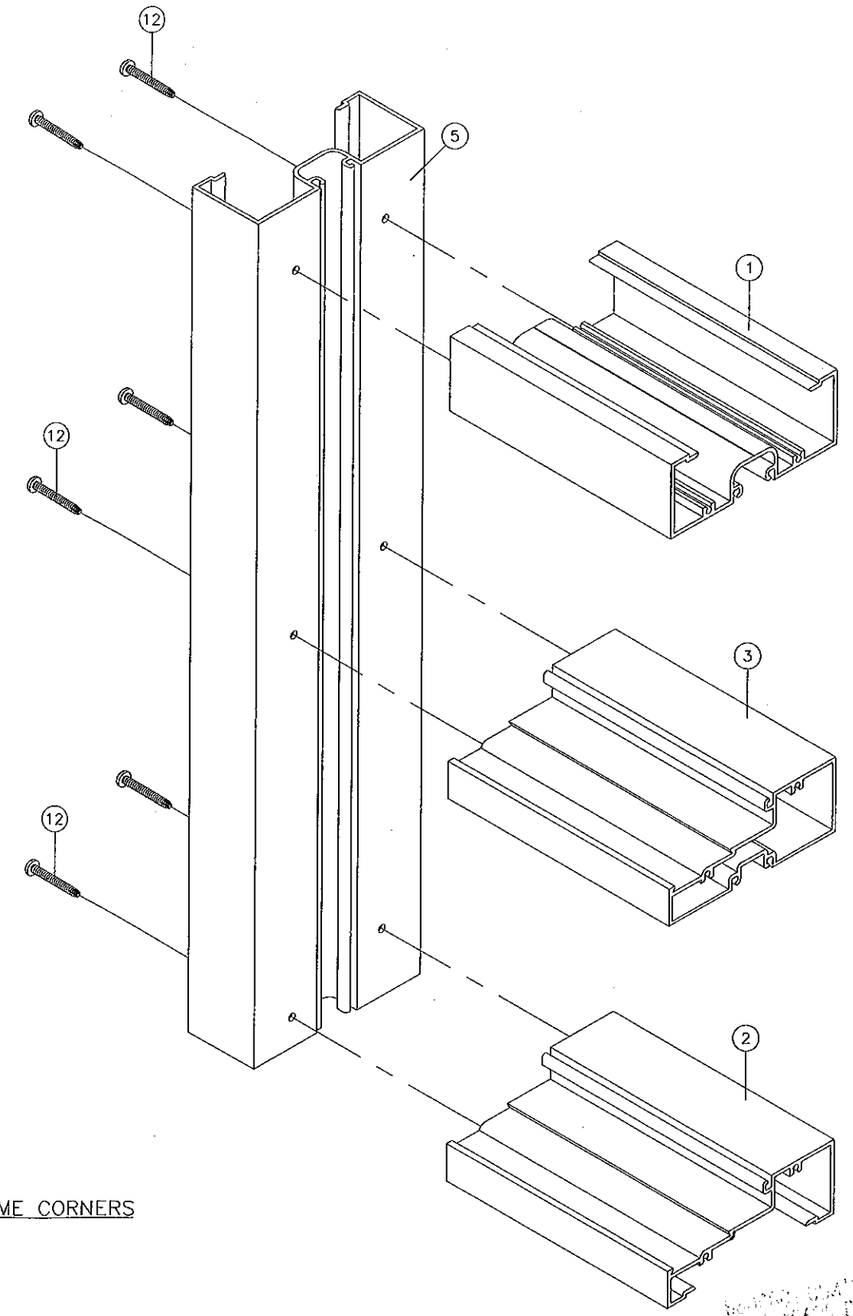

FRAME CORNERS

Trulite
GLASS & ALUMINUM SOLUTIONS™

http://www.trulite.com

800 FAIRWAY DRIVE, Suite 200
DEERFIELD BEACH, FL 33441
p. 800-432-8132 | f. 954-724-2083

PRODUCT:

Resistor
Series 4500 / 450EZ
STOREFRONT WALL
NON - IMPACT

Resistor
PRODUCT SERIES

REVN	DATE/REMARKS

ENGINEER:

MCY ENGINEERING, INC.
GLAZING CONSULTANT

8501 SW 124th Ave. Suite 205A
MIAMI, FL 33183
P: 305-271-0117
Email: MCY.Engineering@att.net
www.MCYEngineering.com

STAMP:

YIQING WANG
YIQING WANG, P.E.
FLORIDA REGISTRATION
RE #55983
C.A.N. 25983
No 55983
STATE OF FLORIDA
PROFESSIONAL ENGINEER
APR 16 2012

PRODUCT CONTROL APPROVAL:

PRODUCT REVISED
as complying with the Florida Building Code
Acceptance No 11-1207.07
Expiration Date 03/19/2016
by
Miami Dade Product Control

DRAWN: S.L.	DRAWING No:
DATE: 10-11-11	**11 OF 11**
DWG: AD11-27	