MIAMI-DADE COUNTY
DEPARTMENT OF PERMITTING, ENVIRONMENT, AND REGULATORY AFFAIRS (PERA)
BOARD AND CODE ADMINISTRATION DIVISION

MIAMI-DADE COUNTY
PRODUCT CONTROL SECTION
11805 SW 26 Street, Room 208
Miami, Florida 33175-2474
T (786) 315-2590 F (786) 315-2599
www.miamidade.gov/pera/

NOTICE OF ACCEPTANCE (NOA)

SMI Aluminum Systems, LLC
11305 NW 128 Street
Medley, FL 33178

SCOPE:

This NOA is being issued under the applicable rules and regulations governing the use of construction materials. The documentation submitted has been reviewed and accepted by Miami-Dade County PERA - Product Control Section to be used in Miami Dade County and other areas where allowed by the Authority Having Jurisdiction (AHJ).

This NOA shall not be valid after the expiration date stated below. The Miami-Dade County Product Control Section (In Miami Dade County) and/or the AHJ (in areas other than Miami Dade County) reserve the right to have this product or material tested for quality assurance purposes. If this product or material fails to perform in the accepted manner, the manufacturer will incur the expense of such testing and the AHJ may immediately revoke, modify, or suspend the use of such product or material within their jurisdiction. PERA reserves the right to revoke this acceptance, if it is determined by Miami-Dade County Product Control Section that this product or material fails to meet the requirements of the applicable building code.

This product is approved as described herein, and has been designed to comply with the Florida Building Code, including the High Velocity Hurricane Zone.

DESCRIPTION: Series "K2LM" 10'0" Outswing Glazed Aluminum Entrance Door – L.M.I.

APPROVAL DOCUMENT: Drawing No. **W04-91**, titled "Series K2LM Alum. Out-Swing Entrance Door", sheets 1 through 11 of 11, prepared by Al-Farooq Corporation, dated 10/25/04 with revision D dated 10/21/11, signed and sealed by Javad Ahmad , P.E., bearing the Miami-Dade County Product Control Revision stamp with the Notice of Acceptance number and expiration date by the Miami-Dade County Product Control Section.

MISSILE IMPACT RATING: Large and Small Missile Impact Resistant

LABELING: Each unit shall bear a permanent label with the manufacturer's name or logo, city, state, model/series, and following statement: "Miami-Dade County Product Control Approved", unless otherwise noted herein.

RENEWAL of this NOA shall be considered after a renewal application has been filed and there has been no change in the applicable building code negatively affecting the performance of this product.

TERMINATION of this NOA will occur after the expiration date or if there has been a revision or change in the materials, use, and/or manufacture of the product or process. Misuse of this NOA as an endorsement of any product, for sales, advertising or any other purposes shall automatically terminate this NOA. Failure to comply with any section of this NOA shall be cause for termination and removal of NOA.

ADVERTISEMENT: The NOA number preceded by the words Miami-Dade County, Florida, and followed by the expiration date may be displayed in advertising literature. If any portion of the NOA is displayed, then it shall be done in its entirety.

INSPECTION: A copy of this entire NOA shall be provided to the user by the manufacturer or its distributors and shall be available for inspection at the job site at the request of the Building Official.

This NOA **revises NOA # 11-0316.05** and consists of this page 1 and evidence pages E-1 and E-2, as well as approval document mentioned above.

The submitted documentation was reviewed by **Manuel Perez, P.E.**

MIAMI-DADE COUNTY APPROVED

NOA No. 11-1208.01
Expiration Date: May 12, 2016
Approval Date: February 23, 2012

NOTICE OF ACCEPTANCE: EVIDENCE SUBMITTED

A. DRAWINGS

1. Manufacturer's die drawings and sections.
2. Drawing No **W04-91**, titled "Series K2LM Alum. Out-Swing Entrance Door", sheets 1 through 11 of 11, prepared by Al-Farooq Corporation, dated 10/25/04 with revision D dated 10/21/11, signed and sealed by Javad Ahmad , P.E.

B. TESTS

1. Test reports on: 1) Air Infiltration Test per FBC, TAS 202-94
   2) Uniform Static Air Pressure Test Loading per FBC, TAS 202-94
   3) Water Resistance Test per FBC, TAS 202-94
   4) Large Missile Impact Test per FBC, TAS 201-94
   5) Cyclic Wind Pressure Loading per FBC, TAS 203-94
   6) Forced Entry Test, per FBC 2411.3.2.1 (b) and TAS 202-94

   along with marked-up drawings and installation diagram of a aluminum outswing door, prepared by Fenestration Testing Laboratory, Inc., Test Reports No. **FTL-4267, FTL-4238, FTL-4257** and **FTL-4276**, dated 06/18/04, 06/30/04, 08/12/04 and 08/13/04 respectively, all signed and sealed by Edmundo Largaespada, P.E. ***(Submitted under previous NOA #05-0301.04)***

C. CALCULATIONS:

1. Anchor verification calculations and structural analysis, complying with FBC-2007 and FBC-2010, prepared by Al-Farooq Corporation, dated 02/02/11 and updated on 10/24/11, signed and sealed by Javad Ahmad, P.E.
2. Glazing complies with ASTM E1300-04

D. QUALITY ASSURANCE

1. Miami-Dade Department of Permitting, Environment, and Regulatory Affairs (PERA).

E. MATERIAL CERTIFICATIONS

1. Notice of Acceptance No. **11–0325.05** " issued to Solutia, Inc. for their "Saflex and Vanceva clear and color interlayers" dated 05/05/11, expiring on 05/21/16
2. Notice of Acceptance No. **08–0206.01** issued to **Solutia, Inc.** for their "**Saflex HP Glass Interlayer**" dated 04/17/08, expiring on 04/14/13.
3. Notice of Acceptance No. **10-0331.02** issued to **Cytec Industries, Inc.** for their "**Uvekol S Laminated Glass Interlayer**", dated 05/05/10, expiring on 02/08/14.

Manuel Perez, P.E.
Product Control Examiner
NOA No. 11-1208.01
Expiration Date: May 12, 2016
Approval Date: February 23, 2012

NOTICE OF ACCEPTANCE: EVIDENCE SUBMITTED

F. STATEMENTS

1. Statement letter of conformance, no financial interest and compliance with the FBC 2010, dated 10/24/11, signed and sealed by Javad Ahmad, P.E.
2. Laboratory compliance letter for Test Reports No. **FTL-4267**, **FTL-4238**, **FTL-4257**, **FTL-4276**, issued by Fenestration Testing Laboratory, Inc., dated 16/18/04, 06/30/04, 08/12/04 and 08/13/04 respectively, all signed and sealed by Edmundo Largaespada, P.E. ***(Submitted under previous NOA No. 05-0301.04)***
3. Name change documentation, dated September, 2010, was submitted under previous **NOA# 11-0316.05**.

G. OTHERS

1. Notice of Acceptance No. **11-0316.05**, issued to SMI Aluminum Systems, LLC for their Series "K2LM" 10'0" Outswing Glazed Aluminum Entrance Door - L.M.I., approved on 05/12/11 and expiring on 05/12/16.

Manuel Perez, P.E.
Product Control Examiner
NOA No. 11-1208.01
Expiration Date: May 12, 2016
Approval Date: February 23, 2012

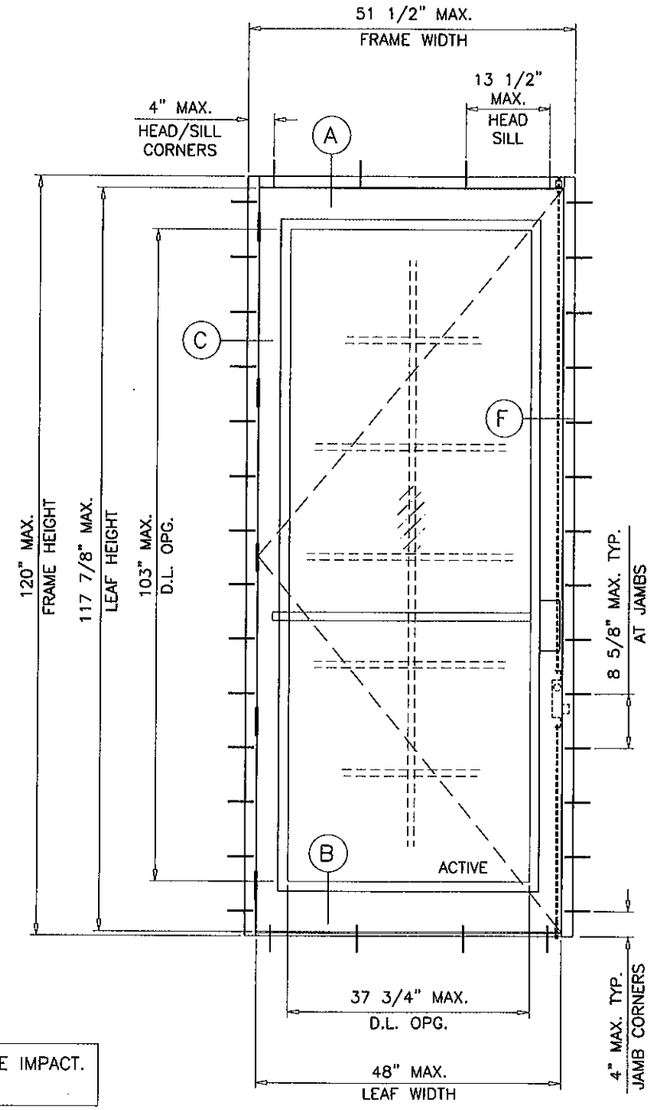

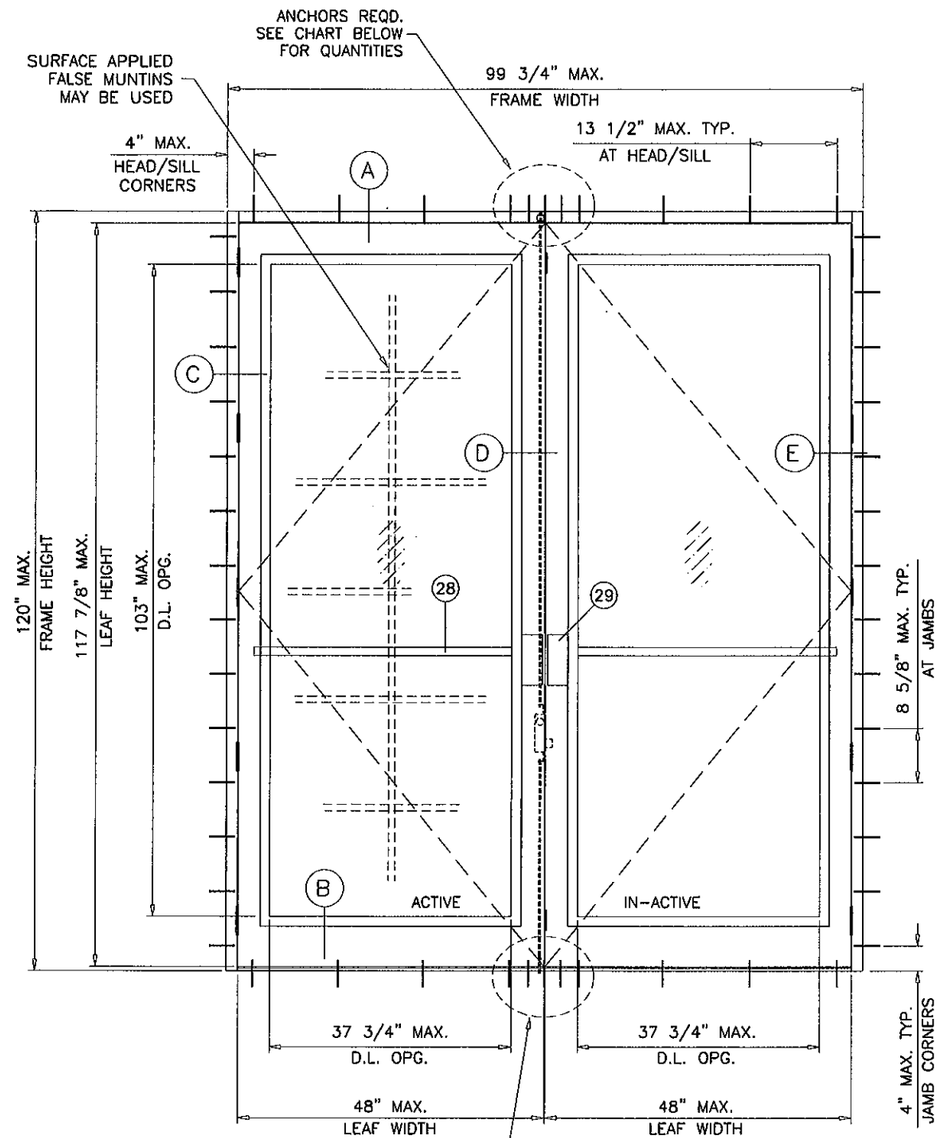

TOTAL NO. OF ANCHORS AT MTG. STILE ENDS	
SUBSTRATE	FOR FRAME HT. UPTO 120 IN.
WOOD	9
CONCRETE	3
METAL	3

TYPICAL ELEVATIONS

THESE DOORS ARE RATED FOR LARGE & SMALL MISSILE IMPACT. SHUTTERS ARE NOT REQUIRED.

SERIES K2LM ALUMINUM OUT-SWING DOOR

USE BUMPER THRESHOLD (#5A+5B) WHEN WATER INFILTRATION REQUIREMENTS ARE NOT APPLICABLE.

USE HIGH-RISE THRESHOLD COVER (#5A+5C) WHEN WATER INFILTRATION REQUIREMENTS MUST BE MET.

SEE CHARTS ON SHEET 2 FOR DESIGN LOAD CAPACITY OF SINGLE (X) AND DOUBLE (XX) LEAF DOORS W/O TRANSOMS.

SEE CHARTS ON SHEET 3 FOR DESIGN LOAD CAPACITY OF SINGLE (O/X) OR DOUBLE (O/XX) LEAF DOORS WITH TRANSOMS.

SEE CHARTS ON SHEETS 5 & 6 FOR DESIGN LOAD CAPACITY OF DOOR MULLION.

USE LOWER VALUES OF DOOR MULLION CHARTS (SHEETS 5 & 6) OR DOOR CAPACITY CHARTS (SHEETS 2 & 3).

NOTES:

THIS PRODUCT HAS BEEN DESIGNED AND TESTED TO COMPLY WITH THE REQUIREMENTS OF THE FLORIDA BUILDING CODE INCLUDING HIGH VELOCITY HURRICANE ZONE (HVHZ).

WOOD BUCKS BY OTHERS, MUST BE ANCHORED PROPERLY TO TRANSFER LOADS TO THE STRUCTURE.

ANCHORS SHALL BE AS LISTED, SPACED AS SHOWN ON DETAILS, ANCHORS EMBEDMENT TO BASE MATERIAL SHALL BE BEYOND WALL DRESSING OR STUCCO.

ANCHORING OR LOADING CONDITIONS NOT SHOWN IN THESE DETAILS ARE NOT PART OF THIS APPROVAL.

A LOAD DURATION INCREASE IS USED IN DESIGN OF ANCHORS INTO WOOD ONLY.

MATERIALS INCLUDING BUT NOT LIMITED TO STEEL/METAL SCREWS, THAT COME INTO CONTACT WITH OTHER DISSIMILAR MATERIALS SHALL MEET THE REQUIREMENTS OF THE FLORIDA BLDG. CODE SECTION 2003.8.4.

LAMINATED GLASS
LARGE MISSILE IMPACT

Engr: JAVAD AHMAD
CIVIL
FLA. PE # 70592
C.A.N. 3638
OCT 25 2011

PRODUCT REVISED
as complying with the Florida Building Code
Acceptance No 11-1208.01
Expiration Date MAY 12, 2016
By Miami-Dade Product Control

AL-FAROOQ CORPORATION
ENGINEERS & PRODUCT DEVELOPMENT
1235 S.W. 87 AVE
MIAMI, FLORIDA 33174
TEL. (305) 264-8100 FAX. (305) 262-6978
COMP-ANL\W04-91SM

SERIES K2LM ALUM OUT-SWING ENTRANCE DOOR

SMI Aluminum Systems, LLC.
11305 N.W. 128 STREET
MEDLEY, FL. 33178
TEL. (305) 888-6288 FAX. (305) 888-6289

revisions:

no	date	by	description
A	03.30.05		REV. PER BCCO COMMENTS
B	05.05.10		UPDATED TO 2007 FBC
C	02.02.11		NO CHANGE THIS SHEET
D	10.21.11		UPDATED TO 2010 FBC

date: 10-25-04
scale: 1/2"=1'-0"
dr. by: HAMID
chk. by:

drawing no.
W04-91

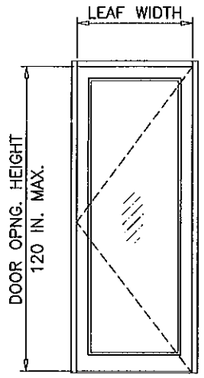

(X)

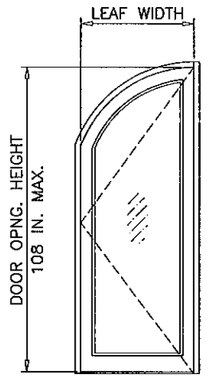

(X)

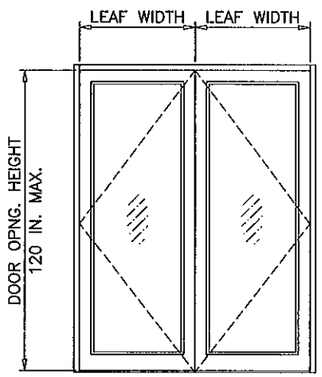

(XX)

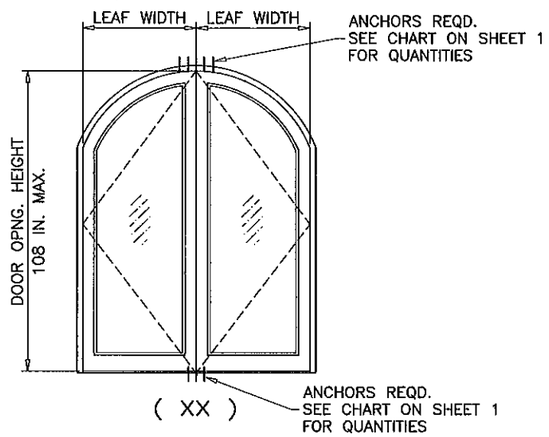

(XX)

SINGLE OR DOUBLE ENTRANCE DOORS W/O TRANSOM			
NOMINAL DIMS.		DESIGN LOAD CAPACITY-PSF	
OPNG. HEIGHT INCHES	LEAF WIDTH INCHES	EXT.(+)	INT.(-)
80	30	100.0	120.0
	36	100.0	120.0
	42	100.0	120.0
	48	100.0	120.0
84	30	100.0	120.0
	36	100.0	120.0
	42	100.0	120.0
	48	100.0	120.0
96	30	100.0	120.0
	36	100.0	120.0
	42	100.0	120.0
	48	100.0	120.0
108	30	100.0	120.0
	36	100.0	120.0
	42	100.0	120.0
	48	100.0	120.0
120	30	100.0	100.0
	36	100.0	100.0
	42	100.0	100.0
	48	100.0	100.0

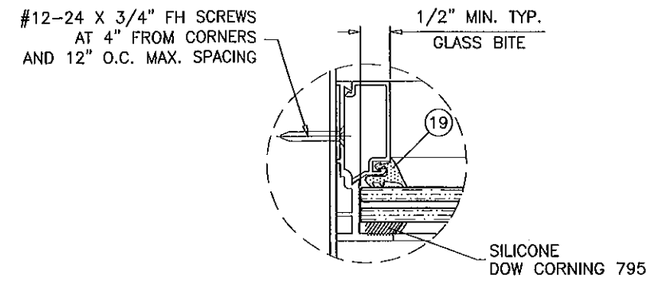

TRANSOM JAMB

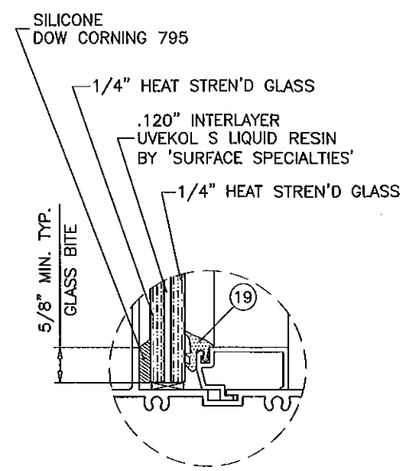

GLASS TYPE 'A'

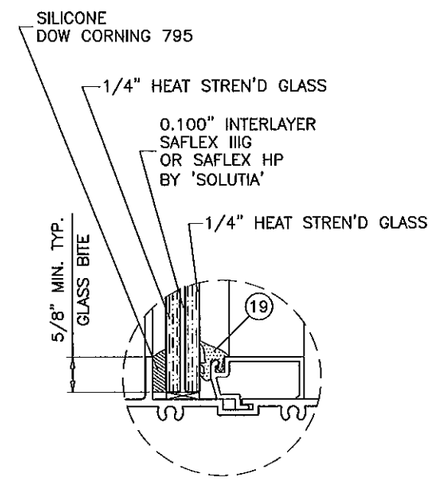

GLASS TYPE 'B'

GLAZING DETAILS TRANSOM

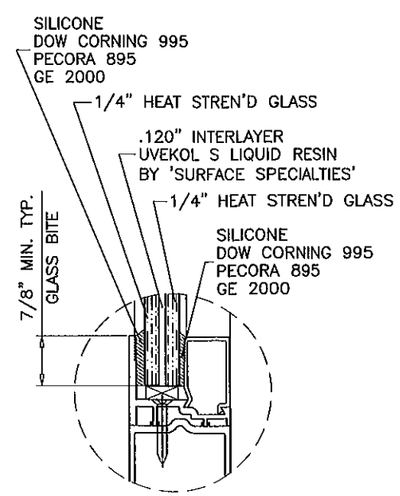

GLASS TYPE 'A'

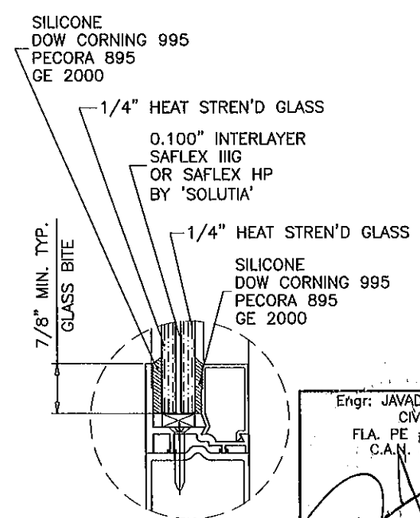

GLASS TYPE 'B'

GLAZING DETAILS DOOR LEAF

NOTE:
GLASS CAPACITIES ON THIS SHEET ARE BASED ON ASTM E1300-04 (3 SEC. GUSTS) AND FLORIDA BUILDING COMMISSION DECLARATORY STATEMENT DCA05-DEC-219

Engr: JAVAD AHMAD
CIVIL
FLA. PE # 70592
C.A.N. 3538

OCT 25 2011

PRODUCT REVISED
as complying with the Florida Building Code
Acceptance No 11-1208.01
Expiration Date MAY 12, 2016
By Manuel Perez
Miami-Dade Product Control

AL-FAROOQ CORPORATION
ENGINEERS & PRODUCT DEVELOPMENT
1235 S.W. 87 AVE
MIAMI, FLORIDA 33174
TEL. (305) 264-8100 FAX. (305) 262-6978
COMP-ANL\W04-91SM

SERIES K2LM ALUM OUT-SWING ENTRANCE DOOR

SMI Aluminum Systems, LLC.
11305 N.W. 128 STREET
MEDLEY, FL. 33178
TEL. (305) 888-6288 FAX. (305) 888-6289

revisions:

no	date	by	description
A	03.30.05		NO CHANGE THIS SHEET
B	05.05.10		UPDATED TO 2007 FBC
C	02.02.11		NO CHANGE THIS SHEET
D	10.21.11		NO CHANGE THIS SHEET

date: 10-25-04
scale: 1/2"=1'-0"
dr. by: HAMID
chk. by:

drawing no.
W04-91

SINGLE ENTRANCE DOORS WITH TRANSOM				
DESIGN LOAD CAPACITY				
NOMINAL DIMS.			WITHOUT REINF.	
OPNG. WIDTH INCHES	DOOR HEIGHT INCHES	TRANSOM HEIGHT INCHES	EXT. (+)	INT. (−)
48 MAX.	108 MAX.	60	100.0	120.0

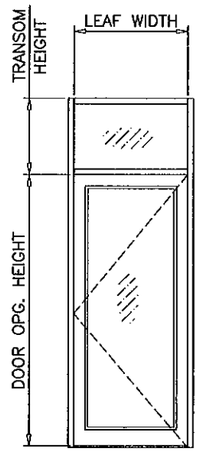

(O/X)

DOUBLE ENTRANCE DOORS WITH TRANSOM						
DESIGN LOAD CAPACITY						
NOMINAL DIMS.			WITHOUT REINF.		WITH REINF.	
OPNG. WIDTH INCHES	DOOR HEIGHT INCHES	TRANSOM HEIGHT INCHES	EXT. (+)	INT. (−)	EXT. (+)	INT. (−)
60	80	24	100.0	120.0	100.0	120.0
		30	100.0	120.0	100.0	120.0
		36	100.0	120.0	100.0	120.0
		42	100.0	120.0	100.0	120.0
		48	100.0	120.0	100.0	120.0
		54	100.0	113.7	100.0	120.0
		60	100.0	108.0	100.0	120.0
72		24	100.0	104.3	100.0	120.0
		30	97.6	97.6	100.0	120.0
		36	91.5	91.5	100.0	120.0
		42	86.0	86.0	100.0	120.0
		48	81.0	81.0	100.0	120.0
		54	76.5	76.5	100.0	120.0
84		24	75.4	75.4	100.0	120.0
		30	70.2	70.2	100.0	120.0
		36	65.6	65.6	100.0	120.0
		42	61.4	61.4	100.0	120.0
		48	57.6	57.6	100.0	120.0
96"		24	56.7	56.7	100.0	120.0
		30	52.5	52.5	100.0	120.0
		36	48.8	48.8	100.0	120.0
		42	45.4	45.4	100.0	120.0
60	84	24	100.0	120.0	100.0	120.0
		30	100.0	120.0	100.0	120.0
		36	100.0	120.0	100.0	120.0
		42	100.0	120.0	100.0	120.0
		48	100.0	116.3	100.0	120.0
		54	100.0	110.4	100.0	120.0
		60	100.0	105.0	100.0	120.0
72		24	100.0	100.5	100.0	120.0
		30	94.1	94.1	100.0	120.0
		36	88.4	88.4	100.0	120.0
		42	83.3	83.3	100.0	120.0
		48	78.6	78.6	100.0	120.0
		54	74.3	74.3	100.0	120.0
84		24	72.6	72.6	100.0	120.0
		30	67.8	67.8	100.0	120.0
		36	63.4	63.4	100.0	120.0
		42	59.4	59.4	100.0	120.0
		48	55.8	55.8	100.0	120.0
96"		24	54.6	54.6	100.0	120.0
		30	50.7	50.7	100.0	120.0
		36	47.1	47.1	100.0	120.0
		42	43.9	43.9	100.0	120.0

DOUBLE ENTRANCE DOORS WITH TRANSOM						
DESIGN LOAD CAPACITY						
NOMINAL DIMS.			WITHOUT REINF.		WITH REINF.	
OPNG. WIDTH INCHES	DOOR HEIGHT INCHES	TRANSOM HEIGHT INCHES	EXT. (+)	INT. (−)	EXT. (+)	INT. (−)
60	96	24	100.0	120.0	100.0	120.0
		30	100.0	120.0	100.0	120.0
		36	100.0	118.2	100.0	120.0
		42	100.0	112.1	100.0	120.0
		48	100.0	106.6	100.0	120.0
72		24	90.4	90.4	100.0	120.0
		30	85.2	85.2	100.0	120.0
		36	80.4	80.4	100.0	120.0
		42	76.0	76.0	100.0	120.0
		48	72.0	72.0	100.0	120.0
84		24	65.4	65.4	100.0	120.0
		30	61.3	61.3	100.0	120.0
		36	57.6	57.6	100.0	120.0
		42	54.2	54.2	100.0	120.0
		48	51.2	51.2	100.0	120.0
96"		24	49.1	49.1	100.0	120.0
		30	45.8	45.8	100.0	120.0
		36	42.8	42.8	100.0	120.0
		42	40.1	40.1	100.0	120.0
60	108	24	100.0	120.0	100.0	120.0
		30	100.0	113.9	100.0	120.0
		36	100.0	108.3	100.0	120.0
72		24	82.2	82.2	100.0	120.0
		30	77.8	77.8	100.0	120.0
		36	73.7	73.7	100.0	120.0
84		24	59.4	59.4	100.0	120.0
		30	56.0	56.0	100.0	120.0
		36	52.8	52.8	100.0	120.0
96"		24	44.7	44.7	100.0	120.0
		30	41.8	41.8	100.0	120.0
		36	39.3	39.3	100.0	120.0

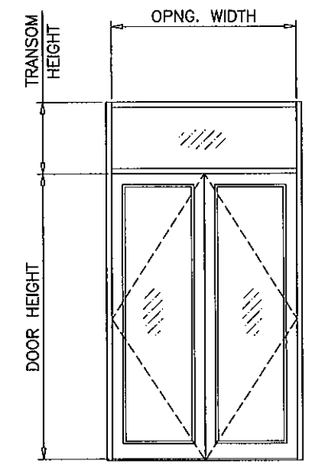

(O/XX)

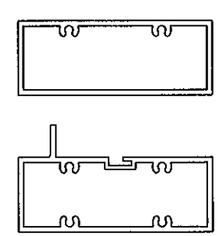

TRANSOM WITHOUT REINF.

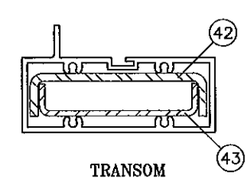

TRANSOM WITH REINF.

NOTE:
GLASS CAPACITIES ON THIS SHEET ARE BASED ON ASTM E1300-04 (3 SEC. GUSTS) AND FLORIDA BUILDING COMMISSION DECLARATORY STATEMENT DCA05-DEC-219

Engr: JAVAD AHMAD
CIVIL
FLA. PE # 70592
C.A.N. 3538

OCT 25 2011

PRODUCT REVISED
as complying with the Florida Building Code
Acceptance No 11-1208.01
Expiration Date MAY 18, 2016
By Miami Dade Product Control

AL-FAROOQ CORPORATION
ENGINEERS & PRODUCT DEVELOPMENT
1235 S.W. 87 AVE
MIAMI, FLORIDA 33174
TEL. (305) 264-8100 FAX. (305) 262-6978

COMP-ANL\W04-91SM

SERIES K2LM ALUM OUT-SWING ENTRANCE DOOR

SMI Aluminum Systems, LLC.
11305 N.W. 128 STREET
MEDLEY, FL. 33178
TEL. (305) 888-6288 FAX. (305) 888-6289

revisions:

no	date	by	description
A	03.30.05		REV. PER BCCO COMMENTS
B	05.05.10		UPDATED TO 2007 FBC
C	02.02.11		NO CHANGE THIS SHEET
D	10.21.11		NO CHANGE THIS SHEET

date: 10-25-04
scale: 1/2"=1'-0"
dr. by: HAMID
chk. by:

drawing no.
W04-91

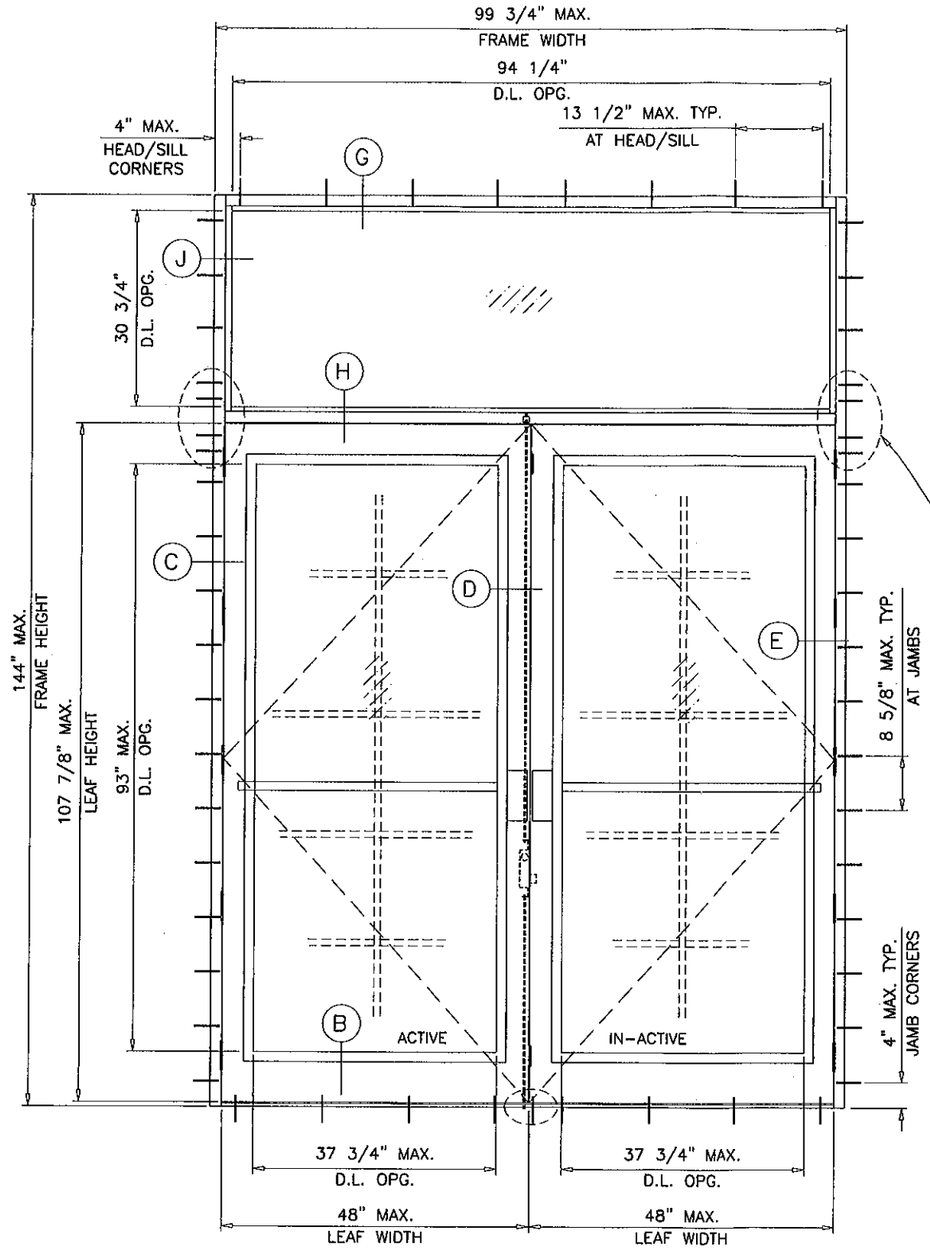

(O/XX)

TYPICAL ELEVATION

SUBSTRATE	NO. OF ANCHORS AT TRANSOM ENDS	
	WITHOUT REINF.	WITH REINF.
WOOD	5	8
CONCRETE	3	5
METAL	3	4

Engr: JAVAD AHMADI
CIVIL
FLA. PE # 70592
C.A.N. 3538
OCT 25 2011

PRODUCT REVISED
as complying with the Florida
Building Code
Acceptance No 11-1208.01
Expiration Date MAY 12, 2016
By Manuel Perez
Miami Dade Product Control

AL-FAROOQ CORPORATION
ENGINEERS & PRODUCT DEVELOPMENT
1235 S.W. 87 AVE
MIAMI, FLORIDA 33174
TEL. (305) 264-8100 FAX. (305) 262-6978
COMP-ANL\W04-91SM

SERIES K2LM ALUM OUT-SWING ENTRANCE DOOR

SMI Aluminum Systems, LLC.
11305 N.W. 128 STREET
MEDLEY, FL. 33178
TEL. (305) 888-6288 FAX. (305) 888-6289

revisions:

no	date	by	description
A	03.30.05		NO CHANGE THIS SHEET
B	05.05.10		UPDATED TO 2007 FBC
C	02.02.11		NO CHANGE THIS SHEET
D	10.21.11		NO CHANGE THIS SHEET

date: 10-25-04
scale: 1/2"=1'-0"
dr. by: HAMID
chk. by:

drawing no.
W04-91

DOOR MULLION LOAD CAPACITY		
NOMINAL DIMS.		LOADS–PSF
WIDTH (W)	FRAME HEIGHT	EXT.(+) & INT.(–)
24"	80"	100.0
30"		100.0
36"		100.0
42"		100.0
48"		100.0
54"		100.0
60"		100.0
24"	84"	100.0
30"		100.0
36"		100.0
42"		100.0
48"		100.0
54"		100.0
60"		100.0
24"	90"	100.0
30"		100.0
36"		100.0
42"		100.0
48"		100.0
54"		100.0
24"	96"	100.0
30"		100.0
36"		100.0
42"		100.0
48"		100.0
24"	102"	100.0
30"		100.0
36"		100.0
42"		100.0
48"		100.0
24"	108"	100.0
30"		100.0
36"		100.0
42"		100.0
24"	114"	100.0
30"		100.0
36"		100.0
42"		100.0
24"	120"	100.0
30"		100.0
36"		100.0
42"		99.7

SUBSTRATE	NO. OF ANCHORS AT DOOR MULLION
WOOD	8
CONCRETE	4
METAL	4

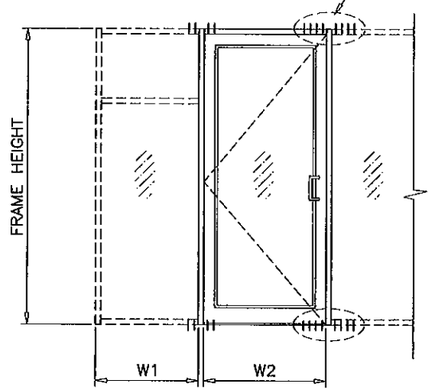

$$\text{WIDTH (W)} = \frac{W1 + W2}{2}$$

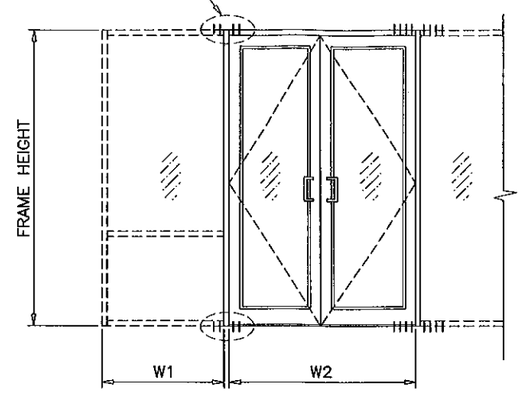

$$\text{WIDTH (W)} = \frac{W1}{2} + \frac{W2}{4}$$

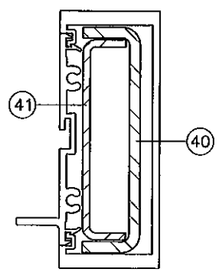

DOOR MULLION

Engr: JAVAD AHMAD
CIVIL
FLA. PE # 70592
C.A.N. 3538

OCT 25 2011

PRODUCT REVISED
as complying with the Florida Building Code
Acceptance No 11-1208.01
Expiration Date MAY 12, 2016
By Manuel Perez
Miami-Dade Product Control

AL-FAROOQ CORPORATION
ENGINEERS & PRODUCT DEVELOPMENT
1235 S.W. 87 AVE
MIAMI, FLORIDA 33174
TEL. (305) 264-8100 FAX. (305) 262-6978

COMP–ANL\W04–91SM

SERIES K2LM ALUM OUT–SWING ENTRANCE DOOR

SMI Aluminum Systems, LLC.
11305 N.W. 128 STREET
MEDLEY, FL. 33178
TEL. (305) 888–6288 FAX. (305) 888–6289

revisions:

no	date	by	description
A	03.30.05		REV. PER BCCO COMMENTS
B	05.05.10		UPDATED TO 2007 FBC
C	02.02.11		NO CHANGE THIS SHEET
D	10.21.11		NO CHANGE THIS SHEET

date: 10–25–04
scale: 1/2"=1'–0"
dr. by: HAMID
chk. by:

drawing no.
W04–91

DOOR MULLION LOAD CAPACITY

NOMINAL DIMS.				LOADS–PSF
DOOR WIDTH W1	SIDELITE WIDTH W2	DOOR HEIGHT A	FRAME SPAN L	EXT. (+) INT. (–)
60"	30"	80"	108"	100.0
	33"			100.0
	39"			100.0
	42"			100.0
72"	30"			100.0
	33"			100.0
	39"			100.0
	42"			100.0
84"	30"			100.0
	33"			100.0
	39"			97.3
	42"			94.7
96"	30"			96.7
	33"			94.2
	39"			89.4
	42"			87.3
60"	30"	80"	114"	100.0
	33"			100.0
	39"			100.0
	42"			99.5
72"	30"			100.0
	33"			98.4
	39"			92.7
	42"			90.1
84"	30"			91.6
	33"			89.1
	39"			84.4
	42"			82.2
96"	30"			83.5
	33"			81.4
	39"			77.4
60"	30"	80"	120"	99.7
	33"			96.4
	39"			90.4
	42"			87.6
72"	30"			88.8
	33"			86.1
	39"			81.3
	42"			79.1
84"	30"			80.0
	33"			77.9
	39"			73.9
	42"			72.1
96"	30"			72.7
	33"			71.0

DOOR MULLION LOAD CAPACITY

NOMINAL DIMS.				LOADS–PSF
DOOR WIDTH W1	SIDELITE WIDTH W2	DOOR HEIGHT A	FRAME SPAN L	EXT. (+) INT. (–)
60"	30"	84"	108"	100.0
	33"			100.0
	39"			100.0
	42"			100.0
72"	30"			100.0
	33"			100.0
	39"			100.0
	42"			100.0
84"	30"			100.0
	33"			100.0
	39"			100.0
	42"			97.8
96"	30"			100.0
	33"			97.7
	39"			92.6
	42"			90.3
60"	30"	84"	114"	100.0
	33"			100.0
	39"			100.0
	42"			100.0
72"	30"			100.0
	33"			100.0
	39"			95.4
	42"			92.6
84"	30"			94.7
	33"			92.0
	39"			87.0
	42"			84.7
96"	30"			86.5
	33"			84.2
	39"			80.0
60"	30"	84"	120"	100.0
	33"			99.0
	39"			92.6
	42"			89.7
72"	30"			91.4
	33"			88.5
	39"			83.5
	42"			81.2
84"	30"			82.5
	33"			80.3
	39"			76.0
	42"			74.1
96"	30"			75.2
	33"			73.3

DOOR MULLION LOAD CAPACITY

NOMINAL DIMS.				LOADS–PSF
DOOR WIDTH W1	SIDELITE WIDTH W2	DOOR HEIGHT A	FRAME SPAN L	EXT. (+) INT. (–)
60"	30"	96"	108"	100.0
	33"			100.0
	39"			100.0
	42"			100.0
72"	30"			100.0
	33"			100.0
	39"			100.0
	42"			100.0
84"	30"			100.0
	33"			100.0
	39"			100.0
	42"			100.0
96"	30"			100.0
	33"			100.0
	39"			100.0
	42"			100.0
60"	30"	96"	114"	100.0
	33"			100.0
	39"			100.0
	42"			100.0
72"	30"			100.0
	33"			100.0
	39"			100.0
	42"			100.0
84"	30"			100.0
	33"			100.0
	39"			95.6
	42"			92.8
96"	30"			96.5
	33"			93.7
	39"			88.5
60"	30"	96"	120"	100.0
	33"			100.0
	39"			99.8
	42"			96.5
72"	30"			100.0
	33"			96.8
	39"			90.7
	42"			87.9
84"	30"			91.0
	33"			88.2
	39"			83.1
	42"			80.7
96"	30"			83.3
	33"			81.0

DOOR MULLION LOAD CAPACITY

NOMINAL DIMS.				LOADS–PSF
DOOR WIDTH W1	SIDELITE WIDTH W2	DOOR HEIGHT A	FRAME SPAN L	EXT. (+) INT. (–)
60"	30"	108"	114"	100.0
	33"			100.0
	39"			100.0
	42"			100.0
72"	30"			100.0
	33"			100.0
	39"			100.0
	42"			100.0
84"	30"			100.0
	33"			100.0
	39"			100.0
	42"			100.0
96"	30"			100.0
	33"			100.0
	39"			98.3
60"	30"	108"	120"	100.0
	33"			100.0
	39"			100.0
	42"			100.0
72"	30"			100.0
	33"			100.0
	39"			98.8
	42"			95.5
84"	30"			100.0
	33"			97.4
	39"			91.1
	42"			88.3
96"	30"			92.9
	33"			89.9

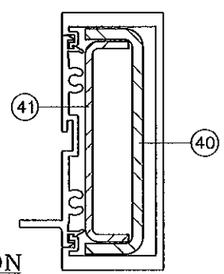

DOOR MULLION

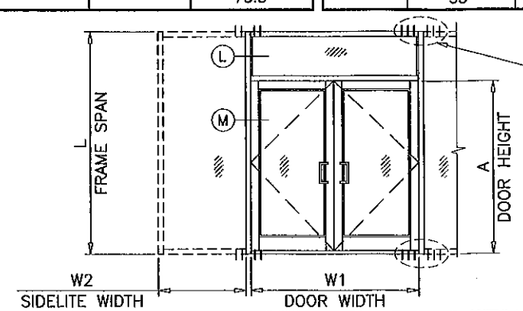

SUBSTRATE	NO. OF ANCHORS AT DOOR MULLION
WOOD	12
CONCRETE	6
METAL	6

Engr: JAVAD AHMAD
CIVIL
FLA. PE # 70592
C.A.N. 3538

OCT 25 2011

PRODUCT REVISED
as complying with the Florida
Building Code
Acceptance No 11-1208.01
Expiration Date May 12, 2016
By: Manuel Perez
Miami-Dade Product Control

AL-FAROOQ CORPORATION
ENGINEERS & PRODUCT DEVELOPMENT
1235 S.W. 87 AVE
MIAMI, FLORIDA 33174
TEL. (305) 264-8100 FAX. (305) 262-6978

COMP–ANL\W04–91SM

SERIES K2LM ALUM OUT–SWING ENTRANCE DOOR

SMI Aluminum Systems, LLC.
11305 N.W. 128 STREET
MEDLEY, FL. 33178
TEL. (305) 888–6288 FAX. (305) 888–6289

revisions:

no	date	by	description
A	03.30.05		REV. PER BCCO COMMENTS
B	05.05.10		UPDATED TO 2007 FBC
C	02.02.11		NO CHANGE THIS SHEET
D	10.21.11		NO CHANGE THIS SHEET

date: 10–25–04
scale: 1/2"=1'–0"
dr. by: HAMID
chk. by:

drawing no.
W04–91

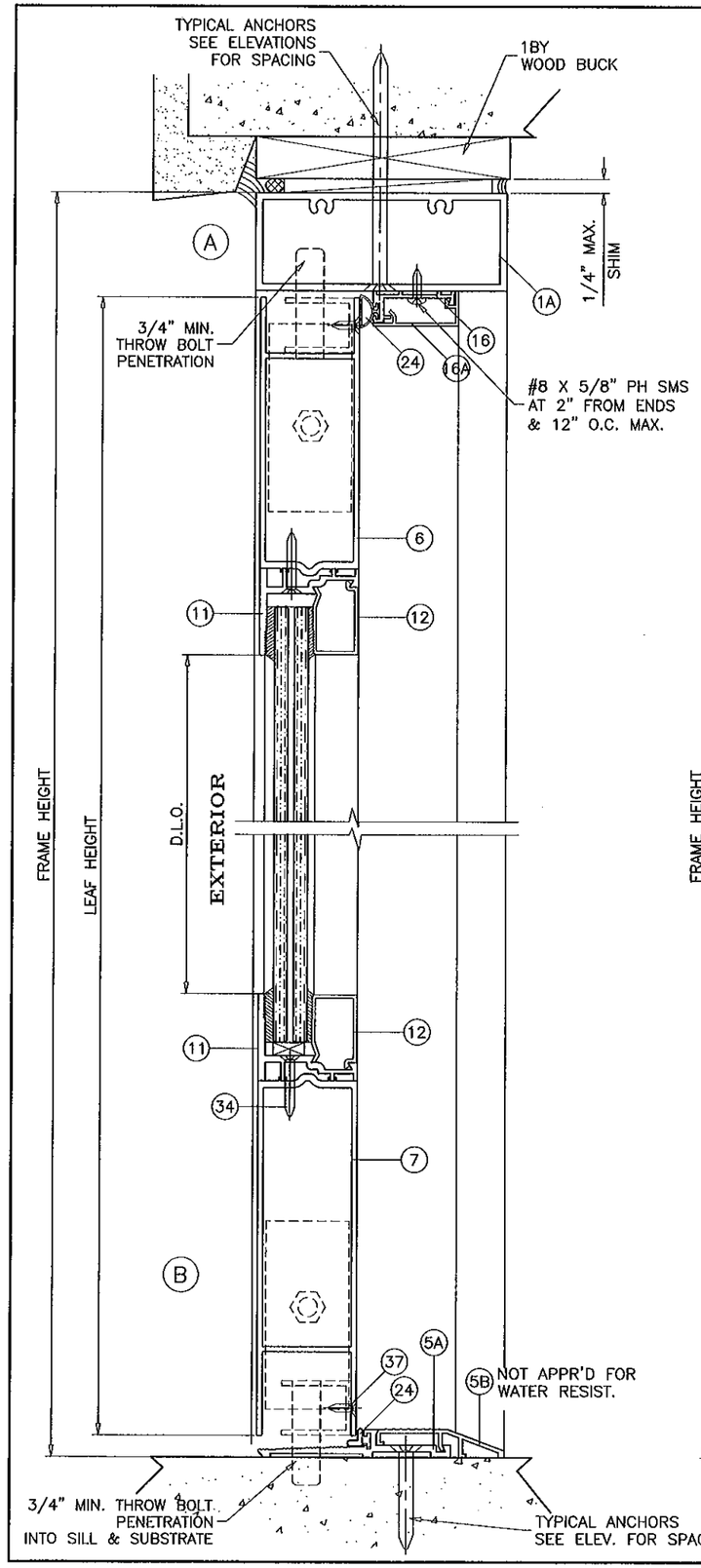

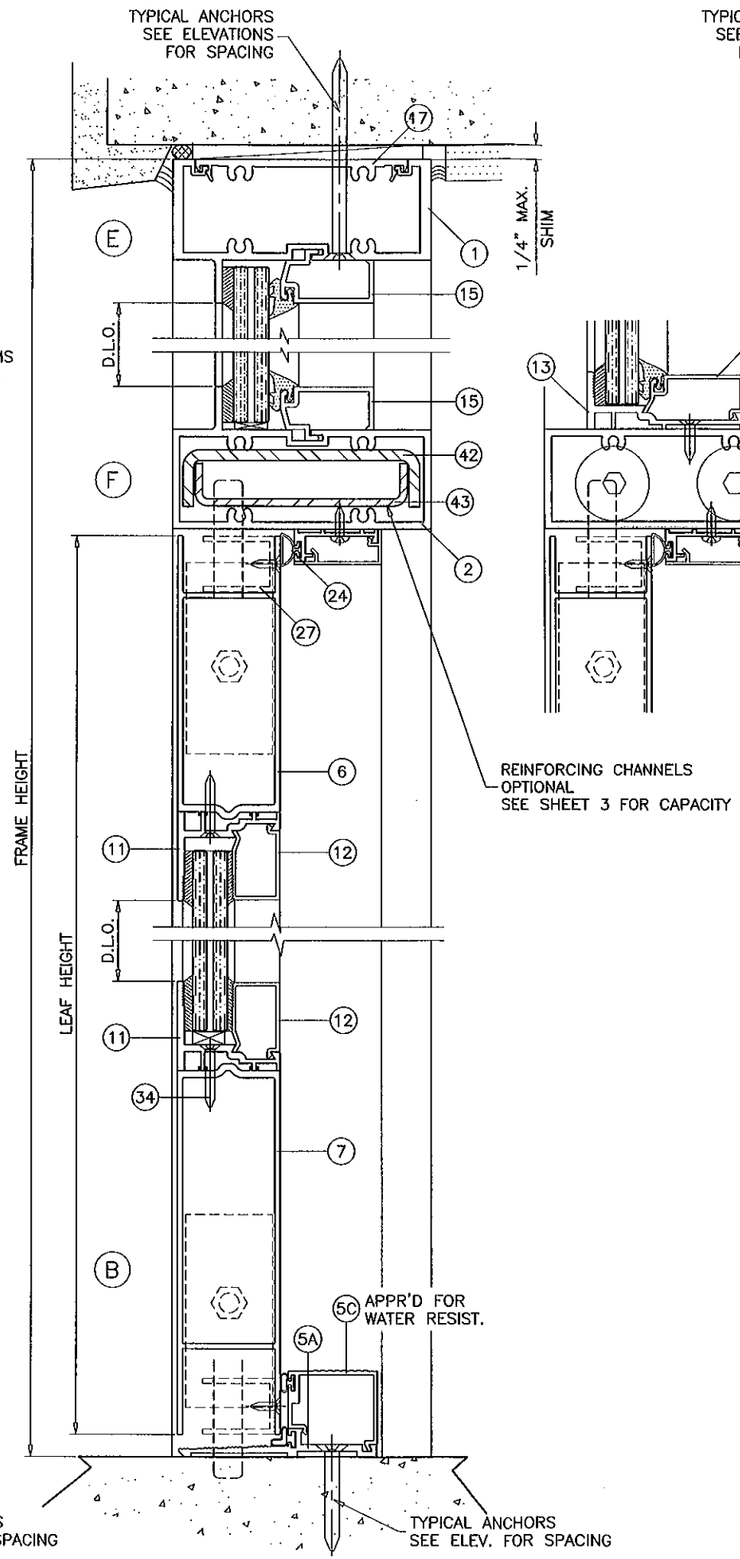

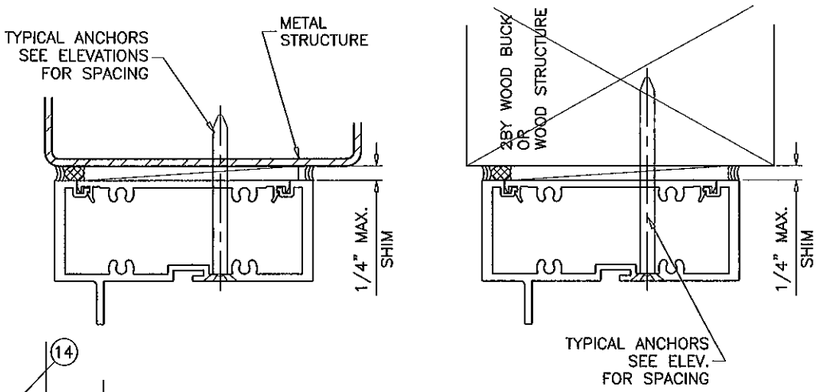

WOOD BUCKS AND METAL STRUCTURE NOT BY 'SMI SYSTEMS' MUST SUSTAIN LOADS IMPOSED BY GLAZING SYSTEM AND TRANSFER THEM TO THE BUILDING STRUCTURE.

TYPICAL ANCHORS: SEE ELEV. FOR SPACING

TYPE 'A'– 1/4" DIA. ULTRACON BY 'ELCO' (Fu=177 KSI, Fy=155 KSI)
INTO 2BY WOOD BUCKS OR WOOD STRUCTURES
1–3/8" MIN. PENETRATION INTO WOOD
THRU 1BY BUCKS INTO CONC. OR MASONRY
1–1/4" MIN. EMBED INTO CONC. OR MASONRY

TYPE 'B'– 1/4" DIA. ULTRACON BY 'ELCO' (Fu=177 KSI, Fy=155 KSI)
DIRECTLY INTO CONC. OR MASONRY
1–1/4" MIN. EMBED INTO MASONRY
1–3/4" MIN. EMBED INTO CONCRETE

TYPE 'C'– #14 SMS OR SELF DRILLING SCREWS (GRADE 2 CRS)
INTO MIAMI–DADE COUNTY APPROVED MULLIONS (MIN. THK.=1/8")
INTO METAL STRUCTURES
STEEL : 12 GA. MIN. (Fy = 36 KSI MIN.)
ALUMINUM : 1/8" THK. MIN. (6063–T5 MIN.)
(STEEL IN CONTACT WITH ALUMINUM TO BE PLATED OR PAINTED)

TYPICAL EDGE DISTANCE
INTO CONCRETE AND MASONRY = 2–1/2" MIN.
INTO WOOD STRUCTURE = 1" MIN.
INTO METAL STRUCTURE = 3/4" MIN.

TYPICAL CL TO CL DISTANCE
INTO CONCRETE AND MASONRY = 3" MIN.
INTO WOOD STRUCTURE = 1" MIN.
INTO METAL STRUCTURE = 1" MIN.

CONCRETE AT HEAD, SILL OR JAMBS f'c = 3000 PSI MIN.
C–90 HOLLOW/FILLED BLOCK AT JAMBS f'm = 2000 PSI MIN.

Engr: JAVAD AHMAD
CIVIL
FLA. PE # 70592
C.A.N. 3538
OCT 25 2011

PRODUCT REVISED
as complying with the Florida Building Code
Acceptance No 11-1208.01
Expiration Date MAR 12, 2016
By Manuel Sesa
Miami-Dade Product Control

AL-FAROOQ CORPORATION
ENGINEERS & PRODUCT DEVELOPMENT
1235 S.W. 87 AVE
MIAMI, FLORIDA 33174
TEL. (305) 264-8100 FAX. (305) 262-6978
COMP-ANL\W04-91SM

SERIES K2LM ALUM OUT-SWING ENTRANCE DOOR

SMI Aluminum Systems, LLC.
11305 N.W. 128 STREET
MEDLEY, FL. 33178
TEL. (305) 888-6288 FAX. (305) 888-6289

revisions:

no	date	by	description
A	03.30.05		NO CHANGE THIS SHEET
B	05.05.10		UPDATED TO 2007 FBC
C	02.02.11		NO CHANGE THIS SHEET
D	10.21.11		NO CHANGE THIS SHEET

date: 10-25-04
scale: 3/8" = 1"
dr. by: HAMID
chk. by:

drawing no.
W04-91

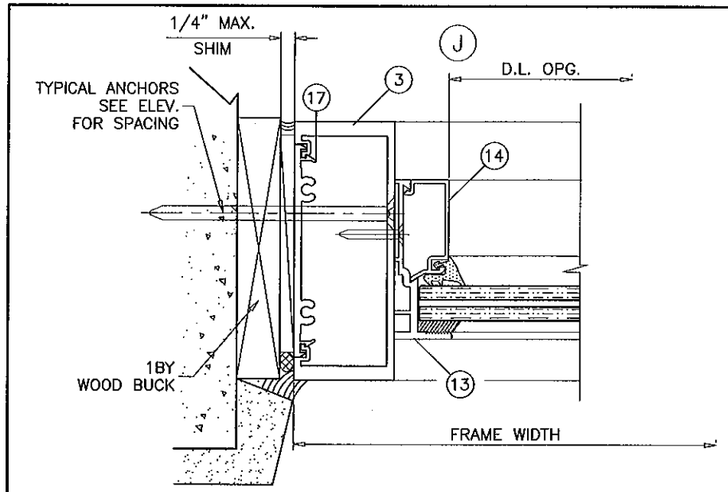

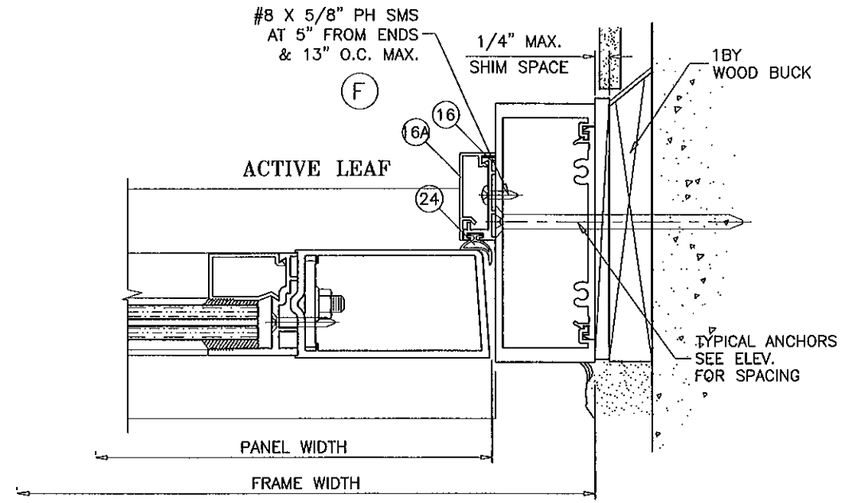

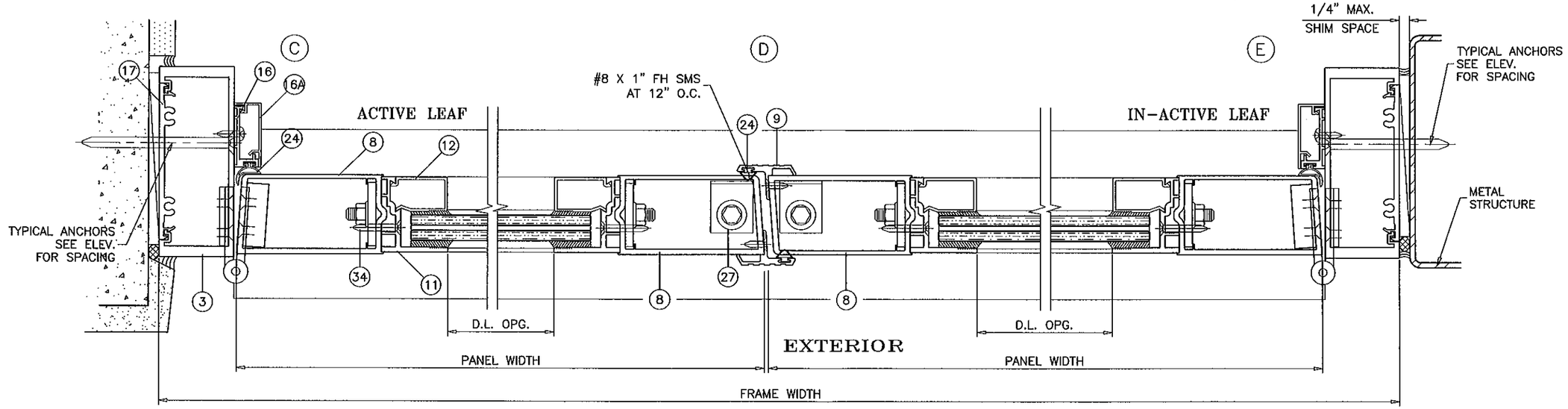

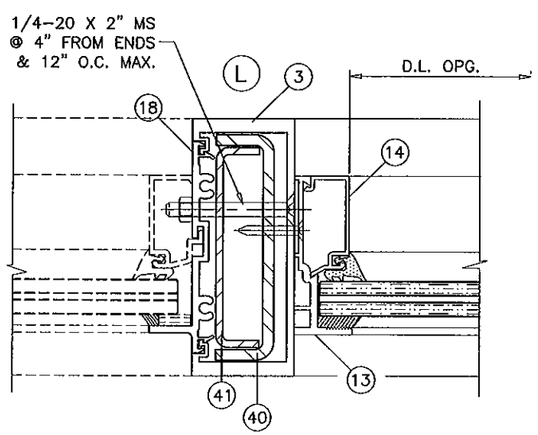

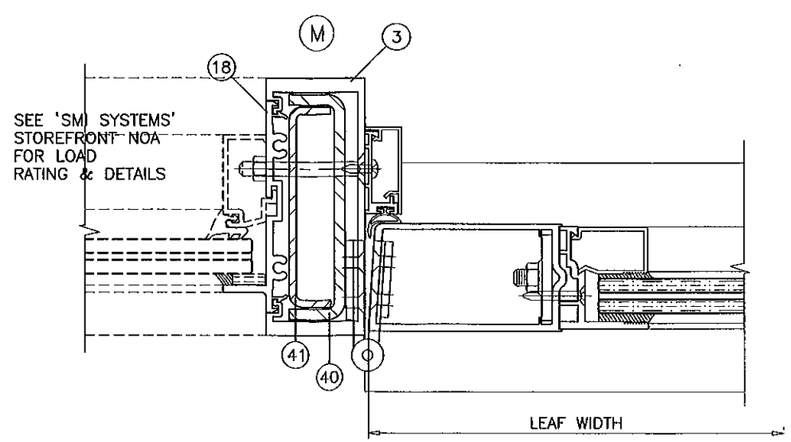

Engr: JAVAD AHMAD
CIVIL
FLA. PE # 70592
C.A.N. 3538

OCT 25 2011

PRODUCT REVISED
as complying with the Florida
Building Code
Acceptance No 11-1208.01
Expiration Date MAY 12, 2016
By Manuel Perez
Miami Dade Product Control

AL-FAROOQ CORPORATION
ENGINEERS & PRODUCT DEVELOPMENT
1235 S.W. 87 AVE
MIAMI, FLORIDA 33174
TEL. (305) 264-8100 FAX. (305) 262-6978

COMP-ANL\W04-91SM

SERIES K2LM ALUM OUT-SWING ENTRANCE DOOR

SMI Aluminum Systems, LLC.
11305 N.W. 128 STREET
MEDLEY, FL. 33178
TEL. (305) 888-6288 FAX. (305) 888-6289

revisions:

no	date	by	description
A	03.30.05		REV. PER BCCO COMMENTS
B	05.05.10		UPDATED TO 2007 FBC
C	02.02.11		NO CHANGE THIS SHEET
D	10.21.11		NO CHANGE THIS SHEET

date: 10-25-04
scale: 3/8" = 1"
dr. by: HAMID
chk. by:

drawing no.
W04-91

sheet 8 of 11

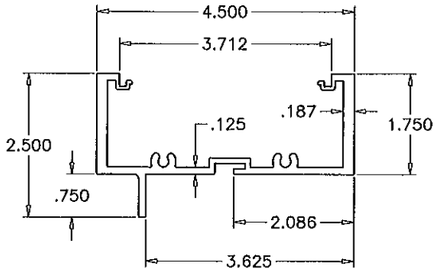

1 FRAME HEAD

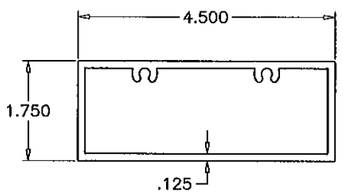

1A ALT. FRAME HEAD

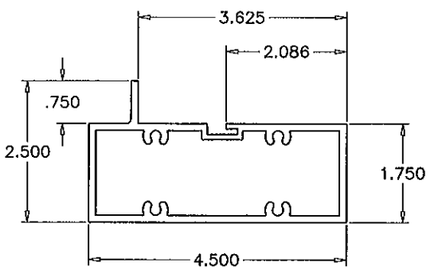

2 FRAME TRANSOM

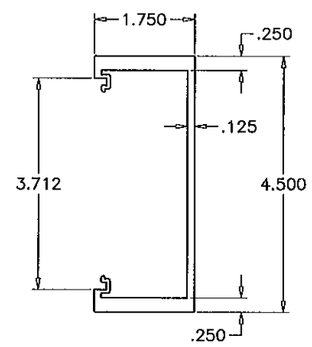

3 FRAME JAMB

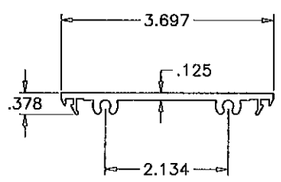

17 FLAT FILLER

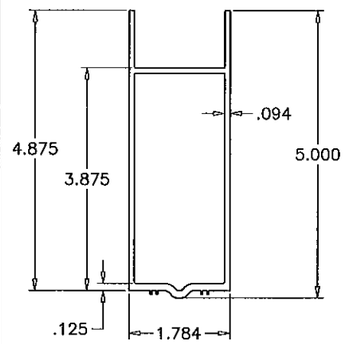

6 TOP RAIL

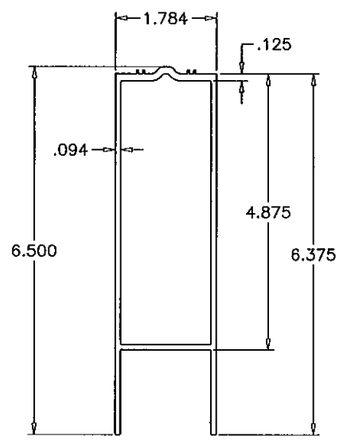

7 BOTTOM RAIL

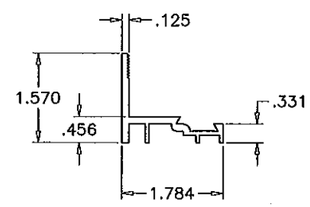

11 EXTERIOR GLASS STOP (DOOR)

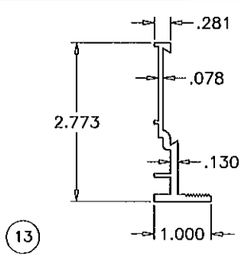

13 EXTERIOR GLASS STOP (TRANSOM)

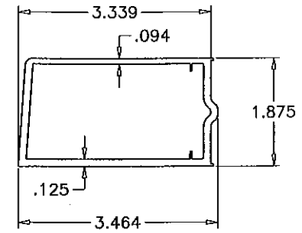

8 DOOR STILE

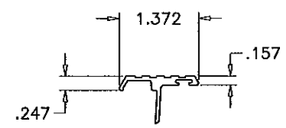

9 ASTRAGAL STILE

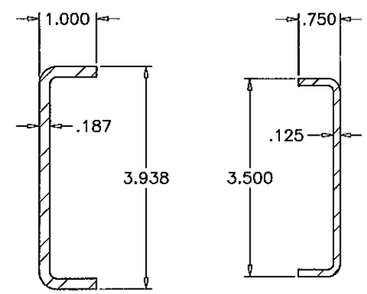

40 41 REINFORCING CHANNELS

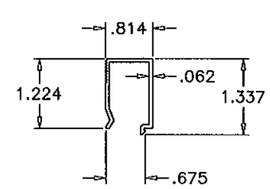

12 INTERIOR GLASS STOP (DOOR)

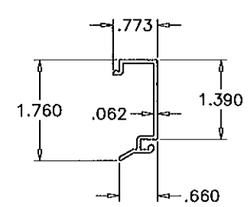

14 INTERIOR GLASS STOP (TRANSOM)

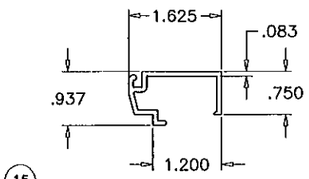

15 GLASS STOP (TRANSOM HEAD/SILL)

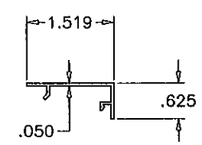

16A DOOR STOP COVER

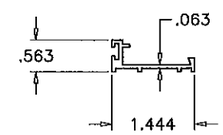

16 DOOR STOP

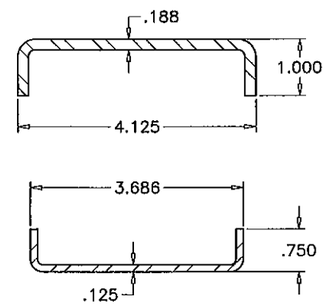

42 43 REINFORCING CHANNELS

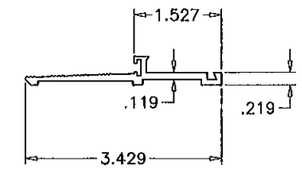

5A BUMPER THRESHOLD

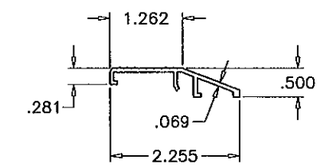

5B STD. THRESHOLD COVER

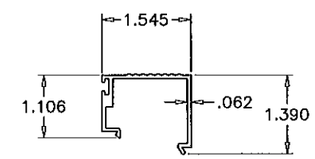

5C HI-RISE THRESHOLD COVER

Engr: JAVAD AHMAD
CIVIL
FLA. PE #. 70592
C.A.N. 3538

OCT 25 2011

PRODUCT REVISED
as complying with the Florida
Building Code
Acceptance No 11-1208.01
Expiration Date MAY 12, 2016
By Manuel Perez
Miami Dade Product Control

AL-FAROOQ CORPORATION
ENGINEERS & PRODUCT DEVELOPMENT
1235 S.W. 87 AVE
MIAMI, FLORIDA 33174
TEL. (305) 264-8100 FAX. (305) 262-6978

COMP-ANL\W04-91SM

SERIES K2LM ALUM OUT-SWING ENTRANCE DOOR

SMI Aluminum Systems, LLC.
11305 N.W. 128 STREET
MEDLEY, FL. 33178
TEL. (305) 888-6288 FAX. (305) 888-6289

revisions:

no	date	by	description
A	03.30.05		NO CHANGE THIS SHEET
B	05.05.10		UPDATED TO 2007 FBC
C	02.02.11		NO CHANGE THIS SHEET
D	10.21.11		NO CHANGE THIS SHEET

date: 10-25-04
scale: 3/8" = 1"
dr. by: HAMID
chk. by:

drawing no.
W04-91

LOCK OPTIONS:

OPTION 1:

SINGLE LEAF DOORS:

ALL SINGLE LEAF DOORS TO BE FITTED WITH 3 POINT LOCK

DOUBLE LEAF DOORS:

ACTIVE LEAF:

THREE POINT LOCK SYSTEM WITH 5 PLY HOOK LOCK BOLT REGENT 2222, KEY OPERATED ON EXTERIOR AND THUMB–TURN ON INTERIOR, LOCATED AT 34" FROM BOTTOM OF PANEL

INACTIVE LEAF:

TWO POINT LOCK SYSTEM SULLIVAN CH 103 WITH THUMB TURN ON THE INTERIOR, LOCATED AT 34" FROM BOTTOM OF PANEL

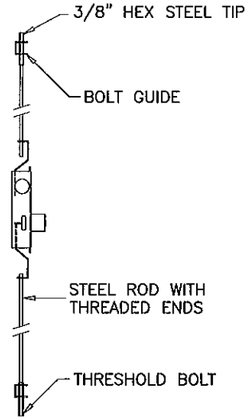

OPTION 2:

SINGLE LEAF DOORS:

ALL SINGLE LEAF DOORS TO BE FITTED WITH 3 POINT LOCK

DOUBLE LEAF DOORS:

ACTIVE LEAF:

THREE POINT LOCK SYSTEM WITH 4 PLY HOOK LOCK REGENT NO. 206–3P, KEY OPERATED ON EXTERIOR AND THUMB–TURN ON INTERIOR, LOCATED AT 36" FROM BOTTOM OF PANEL

INACTIVE LEAF:

TWO POINT LOCK SYSTEM SULLIVAN CH 103 WITH THUMB TURN ON THE INTERIOR, LOCATED AT 36" FROM BOTTOM OF PANEL

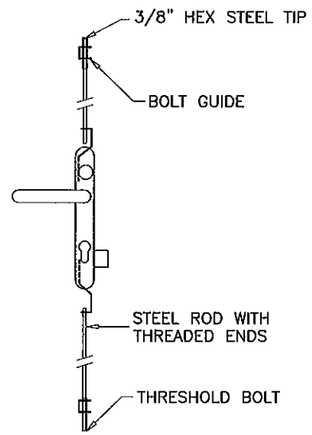

ITEM #	PART #	SMIS EXT. #	REQD.	DESCRIPTION	MATERIAL	MANF./SUPPLIER/REMARKS
1	5806	SMI–001	1	FRAME HEAD	6063–T6	–
1A	SMM–006	SMI–006	1	ALT. FRAME HEAD	6063–T6	–
2	5710	SMI–018	AS REQD.	FRAME TRANSOM	6063–T6	–
3	SMM–6007	SMI–005	2	FRAME JAMB	6063–T6	–
5A	SMM–023	SMI–023	1	BUMPER THRESHOLD	6063–T5	–
5B	SMM–024	SMI–024	1	STD. THRESHOLD COVER	6063–T5	–
5C	SMM–025	SMI–025	1	HI–RISE THRESHOLD COVER	6063–T5	–
6	SMM–5984	SMI–012	1/ LEAF	TOP RAIL	6063–T6	–
7	SMM–5987	SMI–013	1/ LEAF	BOTTOM RAIL	6063–T6	–
8	SMM–5986	SMI–011	2/ LEAF	DOOR STILE	6063–T6	–
9	SMI–030	SMI–030	1/ LEAF	ASTRAGAL	6063–T5	–
11	SMM–5981	SMI–007	4/ LEAF	EXTERIOR GLASS STOP (DOOR)	6063–T5	–
12	SMM–5982	SMI–008	4/ LEAF	INTERIOR GLASS STOP (DOOR)	6063–T5	–
13	SMM–003	SMI–016	–	EXTERIOR GLASS STOP (TRANSOM JAMB)	–	–
14	SMM–004	SMI–017	–	INTERIOR GLASS STOP (TRANSOM JAMB)	–	–
15	SMM–5712	SMI–002	2/ LITE	GLASS STOP (TRANSOM HEAD/SILL)	–	–
16	SMM–002	SMI–014	3/ DOOR	DOOR STOP	6063–T5	–
16A	SMM–001	SMI–015	3/ DOOR	DOOR STOP COVER	6063–T5	–
17	SMM–5807A	SMI–004	OPTIONAL	FLAT FILLER	6063–T6	–
18	SMI–003	–	AS REQD.	INTERMEDIATE SNAP–IN	6063–T5	–
19	H–63	SMI–G01	AS REQD.	WEDGE–IN GASKET	NEOPRENE	DUROMETER 68 SHORE A
24	–	SMI–G03	AS REQD.	BULB W'STRIPPING	VINYL	DUROMETER 83 SHORE A
26	–	–	2/ LEAF	3/8" THREADED ROD WITH NUT	STEEL	–
27	–	–	2/ LEAF	FLUSH BOLT GUIDE	ST. STEEL	–
28	–	–	AS REQD.	PUSH BAR	–	–
29	–	–	AS REQD.	PULL HANDLE	–	–
30	–	–	2	THRESHOLD CLIP	ALUMINUM	2" X 2" X 1/8" X 7/8" LONG
31	–	–	4/ LEAF	SUPPORT PLATE (1–1/2" X 3–3/8" X 3/16")	ALUMINUM	–
33	#12 X 1–1/2"	–	AS REQD.	FRAME ASSEMBLY SCREWS	–	HEX H TEKS
35	#12 X 3/4"	–	AS REQD.	THRESHOLD CLIP SCREWS	–	FH SELF DRILLING
37	#10 X 5/16"	–	2/ GUIDE	GUIDE INSTALLATION SCREWS	–	FH MS
40	–	–	–	REINFORCING CHANNEL (DOOR MULL)	STEEL	1" X 3–15/16" X 1" X 3/16" THK.
41	–	–	–	REINFORCING CHANNEL (DOOR MULL)	STEEL	3/4" X 3–1/2" X 3/4" X 1/8" THK.
42	–	–	OPTIONAL	REINFORCING CHANNEL (TRANSOM)	STEEL	1" X 4–1/8" X 1" X 3/16" THK.
43	–	–	OPTIONAL	REINFORCING CHANNEL (TRANSOM)	STEEL	3/4" X 3–11/16" X 3/4" X 1/8" THK.

HINGES:

4–1/2 X 4" TWO PIECE STAINLESS STEEL BUTT HINGES AT 8" FROM TOP AND BOTTOM AND 26" O.C. MAX.

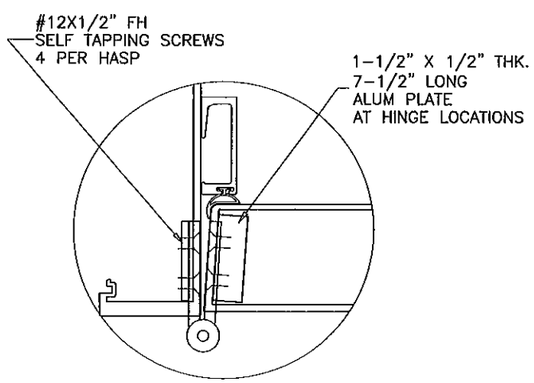

SEALANTS:

ALL FRAME AND LEAF CORNERS AND INSTALLATION SCREWS SEALED WITH SILICONE.

Engr: JAVAD AHMAD
CIVIL
FLA. PE # 70592
C.A.N. 3538

OCT 25 2011

PRODUCT REVISED
as complying with the Florida Building Code
Acceptance No 11-1208.01
Expiration Date MAY 12, 2016
By Miami Dade Product Control

AL-FAROOQ CORPORATION
ENGINEERS & PRODUCT DEVELOPMENT
1235 S.W. 87 AVE
MIAMI, FLORIDA 33174
TEL. (305) 264-8100 FAX. (305) 262-6978

COMP–ANL\W04–91SM

SERIES K2LM ALUM OUT–SWING ENTRANCE DOOR

SMI Aluminum Systems, LLC.
11305 N.W. 128 STREET
MEDLEY, FL. 33178
TEL. (305) 888–6288 FAX. (305) 888–6289

revisions:

no	date	by	description
A	03.30.05		NO CHANGE THIS SHEET
B	05.05.10		UPDATED TO 2007 FBC
C	02.02.11		DUROMETER
D	10.21.11		NO CHANGE THIS SHEET

date: 10–25–04
scale: 3/8" = 1"
dr. by: HAMID
chk. by:

drawing no.
W04–91

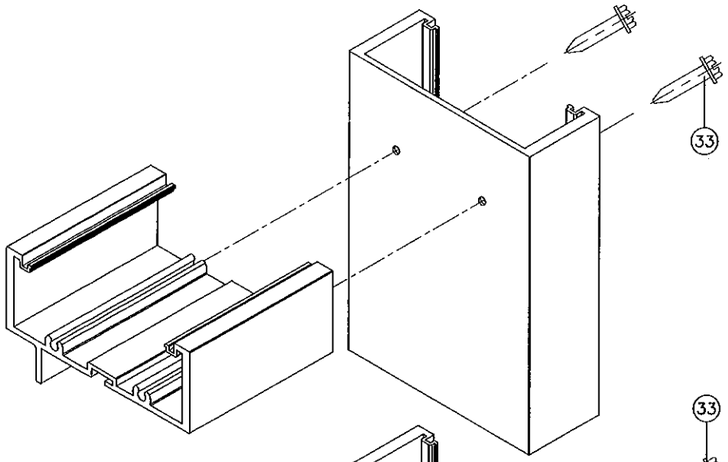

FRAME TOP CORNER

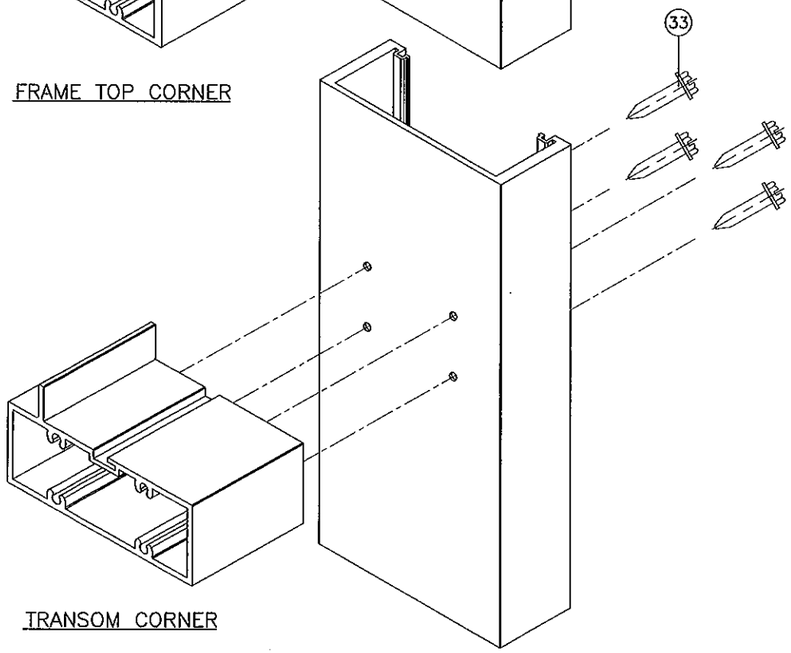

TRANSOM CORNER

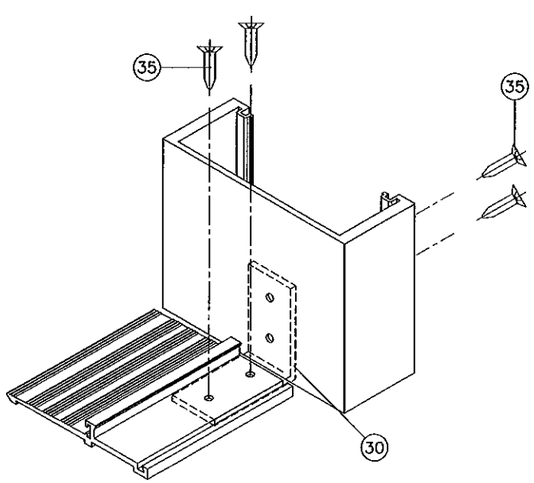

FRAME BOTTOM CORNER

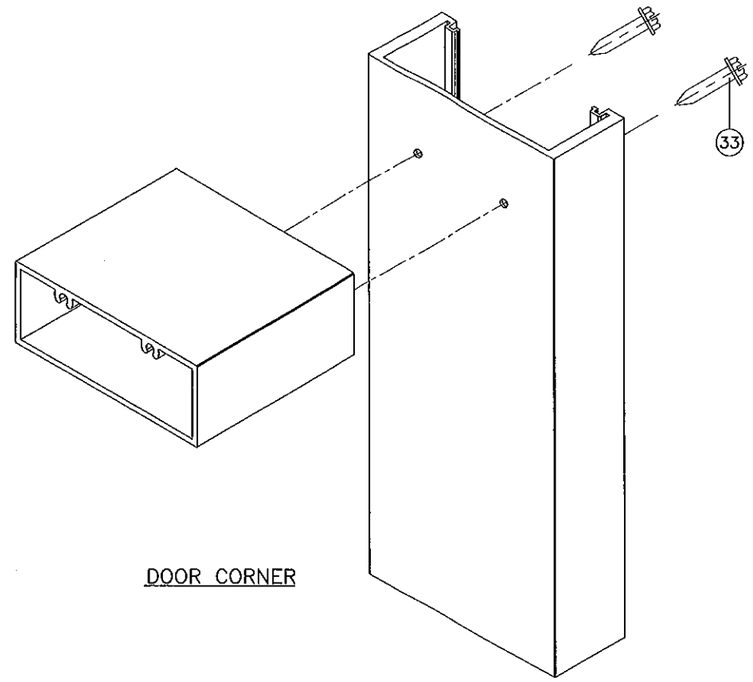

DOOR CORNER

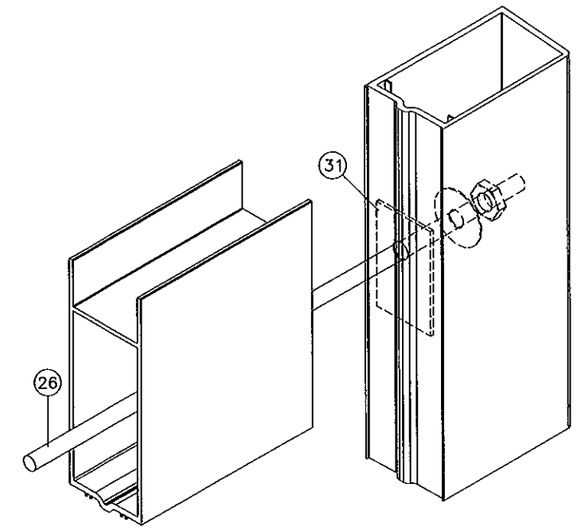

DOOR LEAF CORNER

Engr: JAVAD AHMAD
CIVIL
FLA. PE # 70592
C.A.N. 3538

OCT 25 2011

PRODUCT REVISED
as complying with the Florida
Building Code
Acceptance No 11-1208.01
Expiration Date MAY 12, 2016
By Manuel Perez
Miami Dade Product Control

AL-FAROOQ CORPORATION
ENGINEERS & PRODUCT DEVELOPMENT
1235 S.W. 87 AVE
MIAMI, FLORIDA 33174
TEL. (305) 264-8100 FAX. (305) 262-6978

COMP-ANL\W04-91SM

SERIES K2LM ALUM OUT-SWING ENTRANCE DOOR

SMI Aluminum Systems, LLC.
11305 N.W. 128 STREET
MEDLEY, FL. 33178
TEL. (305) 888-6288 FAX. (305) 888-6289

revisions:

no	date	by	description
A	03.30.05		NO CHANGE THIS SHEET
B	05.05.10		UPDATED TO 2007 FBC
C	02.02.11		NO CHANGE THIS SHEET
D	10.21.11		NO CHANGE THIS SHEET

date: 10-25-04
scale: 3/8" = 1"
dr. by: HAMID
chk. by:

drawing no.
W04-91